	HVAC FOR HYDRO 1x46 MW PANCHET HEP	SPECIFICATION NO. PE-TS-495-571-11000A-A001
		AMMENDMENT-2
		DATE: 23/08/2022
		SHEET 1 OF1

AMENDMENT TO EXISTING CLAUSES OF TECHNICAL SPECIFICATION

Sl. No.	Clause	Existing description	To be read as (Amendment)
1	Page No. 460 of 474	Process & Instrument Diagram for HVAC System (P&ID for AC System), R00,	Bidder to follow the "Process & Instrument Diagram for HVAC System (P&ID for AC System), R01" enclosed with the Amendment
2	PRICE FORMAT ANNEXURE - I : PRICE BREAKUP FOR SUPPLY PART	S. No. B1.4* Fibreglass reinforced plastic (FRP) construction cooling towers complete with fan, motor, FRP basin, nozzles, make-up water, quick fill, equalising and drain water connection. instruments, piping, valves, strainers, ladder & structural support and all accessories as specified as per specification.	Item is not applicable now. S. No. B1.4* stands deleted. Accordingly, technical details for these equipment's mentioned in the specification stands null and void.
3	PRICE FORMAT ANNEXURE - I : PRICE BREAKUP FOR SUPPLY PART	S. No. B1.5* Centrifugal pump sets for condenser water recirculation complete with TEFC motor & all accessories as specified (30 CMH)	Centrifugal pump sets for **Cooling water transfer complete** with TEFC motor & all accessories as specified (30 CMH)
4	PRICE FORMAT ANNEXURE - I : PRICE BREAKUP FOR SUPPLY PART	S. No. B1.6* Make up (soft water) water cum storage tank of Min 2.0 cum capacity for cooling towers - MS (with suitable rubber lining) /FRP with makeup water line with float valve, quick fill line with ball valve, drain line with ball valve, overflow & vent line, instruments, valves and all other accessories as per specification.	Item is not applicable now. S. No. B1.6* stands deleted. Accordingly, technical details for these equipment's mentioned in the specification stands null and void.
5	PRICE FORMAT ANNEXURE - I : PRICE BREAKUP FOR SUPPLY PART	S. No. B1.7a* Condenser water piping & necessary fittings like tees, reducers, expanders, elbows, flanges, all types of valves with flanges, strainers with flanges, air vents etc as per specifications from cooling water source tap-off (Make Up Water Tapping to PAC room / Cooling Tower Area)	Once thru system is employed. Hence, make up water is not applicable. Accordingly, S No. B1.7a* stands deleted.
6	PRICE FORMAT ANNEXURE - I: PRICE BREAKUP FOR SUPPLY PART	S. No. B1.7b* Condenser water piping & necessary fittings like tees, reducers, expanders, elbows, flanges, all types of valves with flanges, strainers with flanges, air vents etc as per specifications from PAC room to cooling tower and return (i.e. condenser water circuit)	S. No. B1.7b* Condenser water piping & necessary fittings like tees, reducers, expanders, elbows, flanges, all types of valves with flanges, strainers with flanges, air vents etc as per specifications from **Cooling Water Source Tap-off to PAC room to drain (i.e. cooling water circuit).**
7	PRICE FORMAT ANNEXURE - I : PRICE BREAKUP FOR SUPPLY PART	S. No. B1.9* Centrifugal pump sets for make up water complete with TEFC motor & all accessories as specified.	Item is not applicable now. S. No. B1.9* stands deleted. Accordingly, technical details for these equipment's mentioned in the specification stands null and void.
8	PRICE FORMAT ANNEXURE - I : PRICE BREAKUP FOR SUPPLY PART	S. No. B1.10* Skid mounted softening plant (2 x 100 %) with instruments, softening feed pumps, regeneration pumps, vessels, buffer tank, associated piping & valves upto make-up water tank and from make-up water tank upto cooling tower with suitable rubber lining, chemicals for dosing and all accessories to meet system requirements as per specification .	Item is not applicable now. S. No. B1.10* stands deleted. Accordingly, technical details for these equipment's mentioned in the specification stands null and void.

9	PRICE FORMAT ANNEXURE - I : PRICE BREAKUP FOR SUPPLY PART	S. No. B1.11* HDPE Piping (2") complying to IS 4984, PN 10, PE80 carbon black, UV rating) along with valves for transferring softening plant reject and cooling tower blow down to nearest drain	Item is not applicable now. S. No. B1.11* stands deleted. Accordingly, technical details for these equipment's mentioned in the specification stands null and void.
10	PRICE FORMAT ANNEXURE - I : PRICE BREAKUP FOR SUPPLY PART	S. No. B1.13 a)* Duplex Strainer (1 CMH) for cooling water system along with necessary accessories	Item is not applicable now. S. No. B1.13a)* stands deleted. Accordingly, technical details for these equipment's mentioned in the specification stands null and void.

FIRST ANGLE PROJECTION

ALL DIMENSIONS ARE IN MM

CUSTOMER'S DRAWING No.

DRAWING No. PE-DG-495-571-11000A-A101

P & I DIAGRAM FOR AC SYSTEM
WATER COOLED PACKAGE AC FOR CONTROL ROOM FOR PANCHET HEP

LEGEND

SYMBOL	DESCRIPTION	TAG	SYMBOL	DESCRIPTION	TAG
	TEMPERATURE GAUGE	TI		NON RETURN VALVE	NRV
	PRESSURE GAUGE	PI		Y-STRAINER	YSTR
	BALANCING VALVE	BV		GATE VALVE	GV
	MOTORISED BUTTERFLY VALVE	MBF		NON RETURN DAMPER	NRD
	3-WAY MOTORISED MIXING VALVE	3MV		FIRE DAMPER (MOTOR OPERATED)	FD
	PUMP	P		VOLUME CONTROL DAMPER.	VCD
	VENT VALVE	–		LEVEL SWITCH (LOW/HIGH)	LS
	PURGE VALVE.	–		DESCALING TEE	–
WFS	WATER FLOW SWITCH	WFS	AT	AIRSTAT	AT
	PRE FILTER	–		FIRE DAMPER (MOTOR OPERATED)	FD
	FINE FILTER	–		FINNED TYPE STRIP HEATER	–
		–	GT	GEYSER THERMOSTAT	GT
—E—	ELECTRICAL LINE	E	HLS	HIGH LEVEL SWITCH	HLS
PH	PAN HUMIDIFIER	PH		PRESSURE TEST POINT	PX
LLS	LOW LEVEL SWITCH	LLS	TT	TEMPERATURE TRANSMITTER	TT
	TEMP. TEST POINT	TX	RHS	HUMIDITY SENSOR	RHS
DPS	DIFFERENTIAL PRESSURE SWITCH	DPS	WPS	WATER LINE PRESSURE SWITCH	WPS
TS	TEMPERATURE SENSOR	TS	PS	AIR LINE PRESSURE SWITCH	PS
	POT STRAINER	–	HLS	HIGH LEVEL SWITCH	HLS
PT	PRESSURE TRANSMITTER	PT		SIGNAL TO DCS	D
TE	TEMPERATURE ELEMENT	TE		NON CHEMICAL WATER TREAT. EQ	–
FM	FLOW METER	FM			
	ORIFICE PLATE	–			

CONDENSER WATER LINE

CHILLED WATER LINE

SUPPLY AND RETURN AIR DUCT

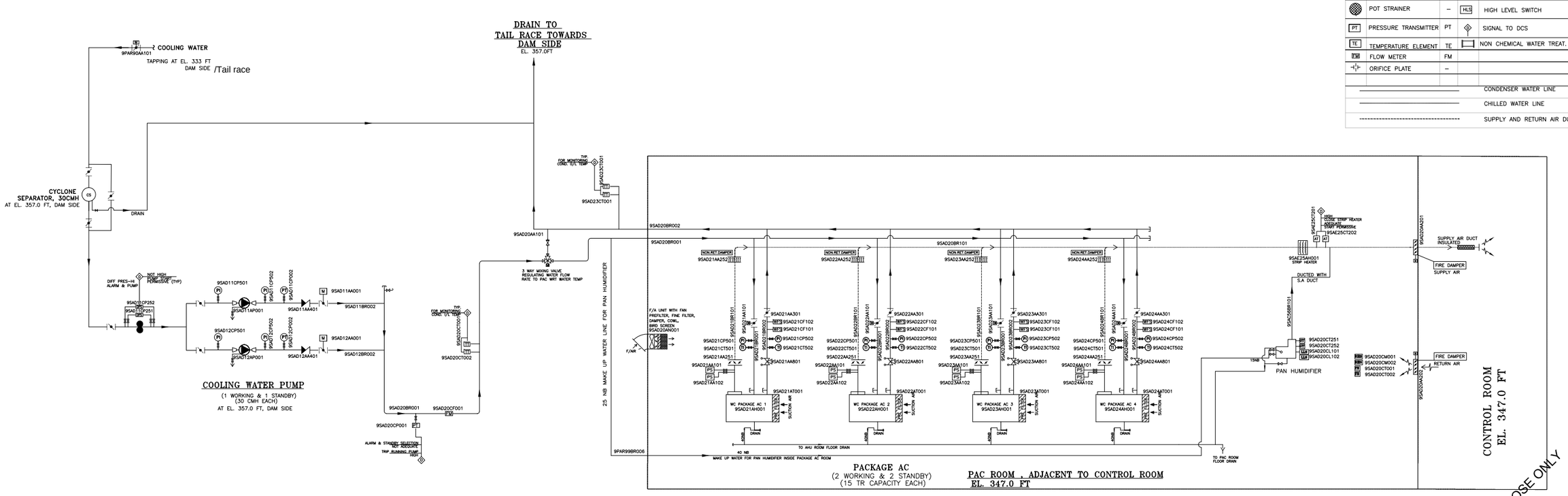

FOR TENDER PURPOSE ONLY

NOTES:

1. ALL SUPPLY & RETURN DUCT SHALL BE INSULATED AS PER SPECIFICATION.
2. ALL PIPING AND VALVES OF SIZE 50NB & BELOW SHALL BE PROVIDED AS PER SYSTEM REQUIREMENT
3. ALL PRESSURE GAUGES, PRESSURE SWITCHES, DIFFERENTIAL PRESSURE SWITCHES SHALL BE PROVIDED WITH ISOLATION VALVE.
4. TEMPERATURE SENSOR (TE) & RELATIVE HUMIDITY SENSOR (RHS) SHALL BE PROVIDED IN EACH PAC ROOM.
5. ALL INSTRUMENT AND TEST POINTS SHALL BE PROVIDED WITH ISOLATING ROOT VALVE
6. MOTORIZED VALVES SHALL BE PROVIDED WITH SPECTACLE BLIND WITH COUNTER FLANGE FOR LINE ISOLATION.
7. VENT AND DRAIN SHALL BE PROVIDED AT THE HIGHEST AND LOWESH POINT RESPECTIVELY AS PER SYSTEM REQUIREMENT.
8. ALL EQUIPMENT DRAIN SHALL BE CONNECTED TO NEAREST BUILDING / PLANT ROOM DRAIN.
9. MAKE UP WATER TAPPING SHALL BE PROVIDED AT ONE POINT AT EL. 333 FT NEAR DAM SIDE. FURTHER, DISTRIBUTION OF SAME TO INDIVIDUAL EQUIPMENT SHALL BE IN AC SUPPLIER SCOPE.
10. ONE NO. DRY BULB & WET BULB THERMOMETER WITH PSYCHOMETRIC CHART SHALL BE PROVIDED IN EACH AIR CONDITIONED ROOM.
11. ALL VALVES SHALL BE LOCATED AT GRADE / MAN APPROACHABLE HEIGHT. METALLIC STOOL / LADDER TO BE PROVIDED BY AC SUPPLIER FOR ACCESSING VALVES / EQUIPMENTS.
12. APPLICABILITY OF WATER SOFTENING PLANT SHALL BE DECIDED DURING DETAIL ENGINEERING.
13. THE QUANTITY SHOWN IN THE DRAWING FOR VALVES, INSTRUMENTS ARE INDICATIVE MINIMUM. ANY INSTRUMENTS & VALVES REQUIREMENT FOR SYSTEM REQUIREMENT / COMPLETION, THE SAME SHALL BE PROVIDED WITHOUT ANY PRICE IMPLICATION.
14. 3 WAY VALVE IN THE CONDENSER WATER LINE SHALL BE OPERATED BASED ON WATER TEMPERATURE. IN CASE THE WATER TEMPERATURE GOES BELOW LIMIT PRESCRIBED BY PAC SUPPLIER, PART THE FLOW SHALL BE DIVERTED DIRECTLY TO DRAIN TO AVOID PAC TRIPPING DUE TO LOW WATER TEMPERATURE.

KKS NOMENCLATURE

9	SAD	10	AA	001

- EQ / INSTRUMENT NUMBER KEY
- EQUIPMENT/INSTRUMENT KEY
- AREA KEY
- FUNCTION KEY
- UNIT NUMBER IDENTIFIER

CUSTOMER	DAMODAR VALLEY CORPORATION (DVC)
CONSULTANT	MECON
PACKAGE:	HVAC SYSTEM FOR HYDRO
PROJECT	R M & U FOR PANCHET HYDEL STATION 1X46 MW

BHARAT HEAVY ELECTRICALS LTD, POWER SECTOR, PROJECT ENGINEERING MANAGEMENT, NOIDA.

DEPT CODE		NAME	SIGN	DATE
M	DRN	VK	Sd/-	08.08.2022
	DSGN	VK	Sd/-	08.08.2022
	CHD	LJ	Sd/-	08.08.2022
	APPD	SG	Sd/-	08.08.2022

TITLE: PROCESS & INSTRUMENTAION DIAGRAM FOR HVAC SYSTEM

DEPT. | SCALE | DRAWING No. PE-DG-495-571-11000A-A101

SIGN | DATE | SHEET 01 OF 01 | REV 01

SIZE-A1

COPYRIGHT AND CONFIDENTIAL
The Information on this document is the property of BHARAT HEAVY ELECTRICALS LIMITED
It must not be used directly or Indirectly in any way detrimental to the Interest of the company.