Corrigendum - II dated 18/06/2026 to CPC Tender No. BHEL/CPC/KRD/EPC_LHP_GHP/27/023

Corrigendum - II dated 18/06/2026 to CPC Tender No. BHEL/CPC/KRD/EPC_LHP_GHP/27/023 for the work of "EPC PACKAGE FOR LIME HANDLING PLANT, GYPSUM HANDLING PLANT AND BOTTOM ASH HOPPER AT 2X660 MW, MSPGCL KORADI THERMAL POWER STATION, UNIT-11& 12, KORADI, NAGPUR, MAHARASHTRA."

A) Modification in TECHNICAL CONDITIONS OF CONTRACT (TCC): The following clause of existing TCC are revised as below;

Sl. No.	TCC Reference Clause No. / Annexure	Existing clause in Tender	Revised clause
1	TCC, Annexure-4	Annexure-4-of TCC - Flow Diagram & Bottom Ash Hopper spec & Plot plan (Page no. 1 & 2 – Flow Diagram of LHP & GHP)	1 Rated/design capacity of limestone handling plant: Bidder to note that rated/design capacity of Limestone handling plant shall be 150/165 TPH. Accordingly, capacity & parameters of all equipment shall be considered. 2 Rated/design capacity of Gypsum handling plant: Bidder to note that rated/design capacity of Gypsum handling plant shall be 50/55 TPH. Accordingly, capacity & parameters of all equipment shall be considered.
2	TCC, Annexure-4	Page no 10/11- Plot Plan - Annexure-4-of TCC - Flow Diagram & Bottom Ash Hopper spec & Plot plan	Revised Plot Plan dated 10.06.2026. (Page no 10/11) of Annexure-4-of TCC is attached with this corrigendum.
3	TCC, Annexure-20	New Annexure to TCC	Annexure-20 to TCC - GA Drawing of Day Silo
4	TCC, Annexure-21	New Annexure to TCC	Annexure-21 to TCC - Gypsum dewatering building layout

Corrigendum - II dated 18/06/2026 to CPC Tender No. BHEL/CPC/KRD/EPC_LHP_GHP/27/023

B) Some of the Bidders had asked queries in the published tender specification. The clarifications issued by BHEL are as below;

Sl. No.	Section/ Clause No	Specification/ Existing Provision	Bidder's Query	BHEL Clarification
1	TECHNICAL CONDITIONS OF CONTRACT (TCC): Annexure-3-Electrical Scope Matrix	Point No 2. 1. MCC buildings/control rooms/ any other electrical building required as per scope of this package 2. Cable trestle/rack required as below in is bidders scope. a. For all bidders facilities. b. For BHEL free supply items located in BHEL buildings & bidder buildings c. Any interconnection required for bidder equipment from BHEL buildings/facilities Above are in scope of EPC Bidder	1. In Tender Plot Plan, Switchgear room has been shown and written as ISG Scope. Please confirm weather Separate MCC room required for LHP and GHP or MCC can be placed inside this room which is in BHEL scope. 2. In plot plan we can see there is a pathway for Pipe and Cable rack which is written as BHEL's scope. Can we lay LHP and GHP cables in this rack or separate cable rack will be required? Please clarify.	1. As mentioned in the scope matrix MCC buildings/control rooms/ any other electrical building required as per scope of this package is in bidders scope. Only tentative location and qty indicated in the plot plan. Bidder to decide the same. Nomenclature updated as LHP GHP MCC. Please refer revised plot plan (Dtd. 10.06.2026) as per sl. no. A).2 of Modification in TECHNICAL CONDITIONS OF CONTRACT (TCC) above. 2. Electrical scope matrix is clear w.r.t cable trestle. Please refer to the revised plot plan (Dtd. 10.06.2026) as per sl. no. A).2 of Modification in TECHNICAL CONDITIONS OF CONTRACT (TCC) above.
2	TECHNICAL CONDITIONS OF CONTRACT (TCC): Annexure-4-Flow Diagram:	Limestone Sampling Unit: No Online Lime Sampling Unit is indicated in Flow Diagram but in document "9 Reply to Prebid queries-BTG Mech" it is written as Bidder can provide Rotary scoop type limestone sampling collection system on conveyor BF 01 & BF 02.	We understand as per specification No online Lime Sampling Unit is envisaged. Please confirm whether rotary scoop type lime stone sampling collection system is required or not. If yes, please confirm whether this would be in scope of EPC bidder or not?	Rotary scoop type Limestone Sampling collection system shall be provided and the same shall be in EPC bidder scope.
3	TECHNICAL CONDITIONS OF CONTRACT (TCC): Annexure-10: MSPGCL-NIT-Tech-Spec-Part-1: KRD1112 Volume - III Part-A Mechanical: Part-A Section-4 FGD, Lime Handling & Chimney-Doc No.: ETG061-BTG-ME-FGD-TS Page No 26 of 92	Weigh Bridge: One no. separate electronic weigh bridge (60T) shall be provided, along with operator control room and required accessories like computer set with printer and associated furniture like Table, Chair and file storage cabinet/almirah.	In plot plan two nos of weigh bridge is reflecting, one near to limestone are and one near to gypsum shed. Please confirm the qty required for LHP and GHP both system.	Two number (2 No.) weighbridge to be provided i.e., one for limestone handling system and one for gypsum handling system.

Corrigendum - II dated 18/06/2026 to CPC Tender No. BHEL/CPC/KRD/EPC_LHP_GHP/27/023

Sl. No.	Section/ Clause No	Specification/ Existing Provision	Bidder's Query	BHEL Clarification
4	TECHNICAL CONDITIONS OF CONTRACT (TCC): Annexure-10: MSPGCL-NIT-Tech-Spec-Part-1: KRD1112 Volume - III Part-A Mechanical: Part-A Section-4 FGD, Lime Handling & Chimney-Doc No.: ETG061-BTG-ME-FGD-TS Page No 43 of 92	i) Two (02) nos. Wheel mounted Front end Loader/ Pay Loader shall be provided for loading of gypsum to open truck. The bucket capacity shall be 2.5 m3. Make BEML, JCB, Caterpillar, Komatsu. ii) Parking shed with maintenance space shall be provided for Pay loaders.	Please confirm whether payloader and Parking shed with maintenance space shall be in scope of EPC bidder or not? If yes, please confirm the location and size of Parking shed with maintenance space.	Payloader and Parking shed with maintenance space shall be in scope of EPC bidder. Bidder to consider size as per the Payloader data and OEM recommendation and location of the shed is indicative in plot plan and same to decided during detail engineering with due approval from end customer.
5	Dump Truck	Capacity of limestone dumper	Please confirm the capacity of limestone dumpers	These dumpers carrying uncrushed limestone to the plant is in MAHAGEBNCO scope and MAHAGENCO has confirmed to provide the details during detail engineering.
6	TECHNICAL CONDITIONS OF CONTRACT (TCC): Annexure-10: MSPGCL-NIT-Tech-Spec-Part-1: KRD1112 Volume - III Part-A Mechanical: Part-A Section-4 FGD, Lime Handling & Chimney-Doc No.: ETG061-BTG-ME-FGD-TS Page No 27 of 92,3.31.12 GROUND HOPPERS, UNLOADING FACILITIES AND CHUTES	The ground hoppers of RCC lined with 10mm thk. TISCRAL/C45 plate shall be provided and any other part of hopper shall be made with MS plate with 4mm thick SS-304 lining.	Please confirm thickness of MS plate	Thickness of MS plate as applicable shall be decided during detail engineering based on design & specification requirement and it shall be subject to approval of end customer (MAHAGENCO).
7	Suspended Magnet	Quantity & Location: Two (02) Nos. over Vibrating discharge hopper Two (02) Nos. over limestone conveyor discharge	Bidder’s understanding for 2 nos of Suspended magnet for LHP shall be on HAC 1 and 2. Please confirm location and scope of other 2 Nos over Vibrating discharge hopper.	Please refer Sl. No. 35, Page 7 of 30 of "PRE-BID CLARIFICATIONS-FGD" issued by MAHAGENCO.

Corrigendum - II dated 18/06/2026 to CPC Tender No. BHEL/CPC/KRD/EPC_LHP_GHP/27/023

Sl. No.	Section/ Clause No	Specification/ Existing Provision	Bidder's Query	BHEL Clarification
8	Belt Weigher	Belt Weigher Sccurancy: + 0.5% (on weighing range) Suitable device for calibration & testing accuracy shall be provided.	As the belt weigher shall be located in High Angle conveyors, it will be difficult to maintain required accuracy level. Please make it to ± 2 to 3% with material drop test.	Tender condition & MAHAGENCO Spec as part of NIT shall prevail.
9	TECHNICAL CONDITIONS OF CONTRACT (TCC): Annexure-4: Limestone Consumption	In LHP flow diagram it is written as,…refer prebid clarification no 20	Please confirm the limestone consumption for 24 hours. So that limestone conveyor capacity can be arrived. Please confirm file name to be referred given in tender.	Bidder to note that rated/design capacity of Limestone handling plant shall be as per Sl. no. A) 1.1 of Modification in TECHNICAL CONDITIONS OF CONTRACT (TCC) above. Accordingly, capacity & parameters of all equipment shall be considered.
10	TECHNICAL CONDITIONS OF CONTRACT (TCC): Annexure-4: GHP Capacity	In GHP flow diagram it is written as,…refer prebid clarification no 25	Please confirm file name to be referred given in tender.	Bidder to note that rated/design capacity of Gypsum handling plant shall be as per Sl. no. A) 1.2 of Modification in TECHNICAL CONDITIONS OF CONTRACT (TCC) above. Accordingly, capacity & parameters of all equipment shall be considered.
11	DE System for Day Silo	Day Silo DE in scope of EPC Bidder.	Please confirm volume of each day silo to calculate the DE system capacity as the DE above day silo is in scope of EPC bidder.	W.r.t DE system above day silo, the Bidder shall provide DE system only for equipments above day silo (i.e., belt feeder, bucket elevator discharge etc.) & not for the silos of the "day silo".
12	Scope Matrix: Dismantling Works	All type of underground dismantling shall be in EPC package vendor.	Please confirm what does the underground dismantling typically involved?	Dismantling of buried/ semi buried structure, existing sub structure etc., if any, encountered and required to be removed for executing LHP & GHP facility is under LHP & GHP vendor's scope. Bidder requested to visit site for additional details and further understanding.

Corrigendum - II dated 18/06/2026 to CPC Tender No. BHEL/CPC/KRD/EPC_LHP_GHP/27/023

Sl. No.	Section/ Clause No	Specification/ Existing Provision	Bidder's Query	BHEL Clarification
13	Limestone Data	Material properties like Sieve analysis, HGI and Moisture are missing	Please provide Sieve analysis, HGI and moisture properties of Limestone.	MAHAGENCO has confirmed to provide the details during detail engineering.
14	TECHNICAL CONDITIONS OF CONTRACT (TCC): Annexure 3: Mandatory Spares	Mandatory spares for below are missing for these items: 1. High Angle Conveyor 2. Payloader 3. Weigh Bridge	Please confirm whether mandatory spares of these items are required or not. If yes, please provide.	Bidder to follow mandatory spares list as given in the tender specifications.
15	Suspended Magnet	Magnetic Coil Material	Bidder is considering Aluminium. Kindly confirm.	Please refer Sl. No. 35, Page 7 of 30 of "PRE-BID CLARIFICATIONS-FGD" issued by MAHAGENCO.
16	TECHNICAL CONDITIONS OF CONTRACT (TCC): Annexure-4-Flow Diagram & Bottom Ash Hopper spec & Plot plan	Page no. 1 of 11, DWG No. – ETG061-BTG-ME-FGD-PFD-001 Rev. No. – 01 titled Flow Diagram for Limestone Handling System	1. Bidder requests BHEL to provide the rated capacity as well as the design capacity of the Limestone Handling System for proper sizing and selection of equipment.	Bidder to note that rated/design capacity of Limestone handling plant shall be as per Sl. no. A) 1. 1 of Modification in TECHNICAL CONDITIONS OF CONTRACT (TCC) above. Accordingly, capacity & parameters of all equipment shall be considered.
			2. Bidder requests BHEL to provide the GA drawing of the Limestone Handling System in both plan and elevation views for better understanding of the system layout and interfacing requirements.	Developing general arrangement drawings for various facilities is in the scope of bidder. Accordingly, bidder to design & develop GA drawings during detail engineering in line with plot plan, flow diagram, tender specification and amendments & clarification issued till placement of order.

Sl. No.	Section/ Clause No	Specification/ Existing Provision	Bidder's Query	BHEL Clarification
			3. It is difficult to accommodate the Belt Weigh Scale, Metal Detector, and ILMS on the High Angle Conveyor, which lead to issues in installation and proper functional working of these instruments. Hence, bidder requests permission to propose an additional belt conveyor below the High Angle Conveyor, prior to feeding the material to the Vibrating Screen for trouble free operations.	Noted and same shall be subject to approval of end customer (MAHAGENCO).
			4. Bidder requests BHEL to clarify whether any Limestone Sampling System is required under the present scope of work.	Rotary scoop type Limestone Sampling collection system shall be provided and the same shall be in EPC bidder scope.
			5. Bidder requests BHEL to provide size of Shed to be considered for Limestone unloading facility (from trucks).	Shed for Limestone unloading facility shall be sized to meet functional & technical requirement in line with tender specifications. Same will be finalised during detail engineering and shall be subject to approval of end customer (MAHAGENCO).
17	TECHNICAL CONDITIONS OF CONTRACT (TCC): Annexure-4-Flow Diagram & Bottom Ash Hopper spec & Plot plan;	Page no. 2 of 11, DWG No. – ETG061-BTG-ME-FGD-PFD-003 Rev. No. – 00 titled Flow Diagram for Gypsum Handling System	1. Bidder requests BHEL to provide the rated capacity as well as the design capacity of the Gypsum Handling System for proper sizing and selection of equipment.	Bidder to note that rated/design capacity of Gypsum handling plant shall be as per Sl. no. A). 1. 2 of Modification in TECHNICAL CONDITIONS OF CONTRACT (TCC) above. Accordingly, capacity & parameters of all equipment shall be considered.

Sl. No.	Section/ Clause No	Specification/ Existing Provision	Bidder's Query	BHEL Clarification
			2. Bidder requests BHEL to provide the GA drawing of the Gypsum Handling System in both plan and elevation views for better understanding of the system layout and interfacing requirements.	Developing general arrangement drawings for various facilities is in the scope of bidder. Accordingly, bidder to design & develop GA drawings during detail engineering in line with plot plan, flow diagram, tender specification and amendments & clarification issued till placement of order.
			3. Bidder requests BHEL to provide size of Shed to be considered for Gypsum Storage Shed.	Gypsum Storage Shed shall be designed for 5 days storage meeting all functional & technical requirement during detail engineering in line with tender specifications and amendments & clarification issued till placement of order. Same shall be subject to approval of end customer (MAHAGENCO).
18	TECHNICAL CONDITIONS OF CONTRACT (TCC): Annexure-4-Flow Diagram & Bottom Ash Hopper spec & Plot plan;	Page no. 10 of 11, DWG No. – PE-DG-527-100-M002 Rev. No. – 2A titled Main Equipment Plan Layout	1. Bidder requests BHEL to confirm whether the latest plot plan issued for the Limestone and Gypsum Handling System is the one to be considered for engineering and layout finalization. If yes, kindly provide the latest plot plan in AutoCAD (DWG) format to facilitate detailed engineering, equipment layout, and interface coordination.	The plot plan furnished along with NIT is indicative and is a progressive drawing. Any Updation required during detail engineering to address site issues, interface issues have to be accommodated in the design and same shall be subject to approval of end customer (MAHAGENCO).
			2. Bidder requests BHEL to clearly identify and mark the roads & drains falling under the EPC Vendor's scope in the plot plan. This will help in proper scope delineation and accurate estimation of civil works.	Bidder requested to refer Annexure-4 Page 11 of 11 for Roads including drains under LHP & GHP vendor’s scope. All approach roads to LHP & GHP facilities along with drains are also under LHP & GHP vendor’s scope.

Sl. No.	Section/ Clause No	Specification/ Existing Provision	Bidder's Query	BHEL Clarification
			3. Bidder requests BHEL to confirm that no Dust Extraction System and no Dust Suppression System are envisaged within the Gypsum Storage Shed.	Please refer Sl. No. 27, Page 6 of 30 of "PRE-BID CLARIFICATIONS-FGD" issued by MAHAGENCO.
19	TECHNICAL CONDITIONS OF CONTRACT (TCC) Chapter - III: Scope of Work; Sl. No. – 1	Page no. 19 of 77, Rotary scoop type Limestone Sampling collection system	Bidder requests BHEL to provide Technical specification for Rotary scoop type Limestone Sampling collection system.	Technical specification for Rotary scoop type Limestone Sampling collection system shall be taken up during detail engineering and shall be subject to approval of end customer (MAHAGENCO)
20	TECHNICAL CONDITIONS OF CONTRACT (TCC) Chapter - III: Scope of Work; Sl. No. – 3	Page no. 19 of 77, Wheel mounted Front end Loader/ Pay Loader	Bidder requests BHEL to provide Technical specification for Rotary scoop type Limestone Sampling collection system.	
21	TECHNICAL CONDITIONS OF CONTRACT (TCC): Annexure-10: MSPGCL-NIT-Tech-Spec-Part-1: KRD1112 Volume - III Part-A Mechanical: Part-A Section-4 FGD, Lime Handling & Chimney-Clause 3.31.12, (VI)	Page no. 27 of 92, The unloading hopper holding capacity shall be 60 MT.	Bidder requests BHEL to confirm the holding capacity of each hopper will be 60 MT of Limestone.	Bidder understanding is correct as these hoppers are meant for handling limestone.
22	TECHNICAL CONDITIONS OF CONTRACT (TCC): Annexure-10: MSPGCL-NIT-Tech-Spec-Part-1: KRD1112 Volume - III Part-A Mechanical: Part-A Section-4 FGD, Lime Handling & Chimney-Clause 3.31.10, Doc no.: ETG061-BTG-ME-FGD-TS, Rev-0	The Bidder shall provide 2x100% capacity of conveying, crushing and grinding system. The capacity of each conveying, crushing and grinding system shall run for 8 hours/day to meet the daily requirement of the maximum limestone of the FGD plant for both the units.	Since our scope is from LH-1 & LH-2 to the discharge of RBF-1 & RBF-2 (LS Storage Silo Top), we require the limestone storage silo capacity to determine the conveyor capacity as per Flow Diagram No. ETG061-BTG-ME-FGD-PFD-001, Rev. 01. The conveyor capacity will be calculated based on filling the silo within 8 hours (Silo Capacity / 8 hours). Kindly confirm.	Bidder to note that rated/design capacity of Limestone handling plant shall be as per Sl. no. 1. (1) of Technical Corrigendum. Accordingly, capacity & parameters of all equipment shall be considered.

Corrigendum - II dated 18/06/2026 to CPC Tender No. BHEL/CPC/KRD/EPC_LHP_GHP/27/023

Sl. No.	Section/ Clause No	Specification/ Existing Provision	Bidder's Query	BHEL Clarification
23	TECHNICAL CONDITIONS OF CONTRACT (TCC): Annexure-10: MSPGCL-NIT-Tech-Spec-Part-1: KRD1112 Volume - III Part-A Mechanical: Part-A Section-4 FGD, Lime Handling & Chimney-Point no. ii), Clause 3.35.02, Doc no.: ETG061-BTG-ME-FGD-TS, Rev-0	The capacity of each Gypsum belt capacity shall be 110% of vacuum belt capacity.	Kindly provide the Vacuum Belt Feeder capacity to enable us to determine the capacity of the succeeding belt conveyor, which is within our scope of supply.	Bidder to note that rated/design capacity of Gypsum handling plant shall be as per Sl. no. A). 1. 2 of Modification in TECHNICAL CONDITIONS OF CONTRACT (TCC) above. Accordingly, capacity & parameters of all equipment shall be considered.
24	TECHNICAL CONDITIONS OF CONTRACT (TCC): Annexure-10: MSPGCL-NIT-Tech-Spec-Part-1: KRD1112 Volume - III Part-A Mechanical: Part-A Section-4 FGD, Lime Handling & Chimney-Point no. xii), Clause 3.35.02, Doc no.: ETG061-BTG-ME-FGD-TS, Rev-0	Gypsum storage shed shall be designed for 5 days storage.	The required gypsum storage shed volume will be determined considering the operation of 2 × 100% gypsum belt conveyors. Kindly provide the Vaccume belt feeder capacity and operating hours in a day to enable us to calculate the required gypsum storage shed volume.	Bidder to refer sheet no. 3 of 11 "DESIGN INPUTS FOR LIMESTONE & GYPSUM HANDLIN SYSTEM", Annexure-4 of the tender specifications for Vacuum belt feeder capacity for arriving the storage capacity.
25	—	—	Kindly provide the elevation drawings of the LHS. If the preparation of the elevation layout drawing is within our scope, kindly provide the silo building drawing, including the top-of-silo dimensions and center-to-center (C/C) distances between the silos, to enable us to determine the lengths of RBC-01 and RBC-02.	Developing general arrangement drawings for various facilities is in the scope of bidder. Accordingly, bidder to design & develop GA drawings during detail engineering in line with plot plan, flow diagram, tender specification and amendments & clarification issued till placement of order. Center-to-center (C/C) distance between Silos: 17000mm; Elevation of Floor above Silo: 41 mtr Please refer Annesure-20: GA Drawing of Day Silo as issued in sl. no. A).3 of Modification in TECHNICAL CONDITIONS OF CONTRACT (TCC) above.

Corrigendum - II dated 18/06/2026 to CPC Tender No. BHEL/CPC/KRD/EPC_LHP_GHP/27/023

Sl. No.	Section/ Clause No	Specification/ Existing Provision	Bidder's Query	BHEL Clarification
26	—	—	Kindly provide the elevation drawings of the GHS. If the preparation of the elevation layout drawing is within our scope, kindly provide the Vaccum belt feeder discharge elevation level, C/C of Vaccum belt feeders, and Vaccum belt feeder building details with elevation details of mounting floor to rest tail end of GC-1A&1B	Bidder to design & develop GA drawings in line with plot plan, flow diagram, tender specification and amendments & clarification issued till placement of order. Please refer Annesure-21: Gypsum dewatering building layout as issued in sl. no. A).3 of Modification in TECHNICAL CONDITIONS OF CONTRACT (TCC) above, for Vaccum belt feeder discharge elevation level, C/C of Vaccum belt feeders, and Vaccum belt feeder building details.
27	—	—	Confirm floor for GC-1A/1B tail end is in BHEL scope.	Entire gypsum conveyor including its tail end shall be in bidder scope. However, Civil and structural works of GC-1A/1B tail end floor is excluded from bidder's scope. Supply & erection of embedment in concretes, stools for GC-1A/1B tail end floor required for bidder's equipment shall be in bidder's scope.
28	—	—	Provide ash handling flow diagram with scope markings including electrical & Instrumentation like LHS and GHS flow diagrams.	Provisions for mounting Instruments and CCTV cameras are in bidder scope. Details shall be shared during detailed engineering. Scope of work is clear from the specification
29	TECHNICAL CONDITIONS OF CONTRACT (TCC): Annexure-3-Electrical Scope Matrix	Annexure-3-Electrical Scope Matrix	Clarify power supply source for ash handling system.	No Electrical and C&I supply scope in AHP
30	TECHNICAL CONDITIONS OF CONTRACT (TCC): Annexure-3-Electrical Scope Matrix	Annexure-3-Electrical Scope Matrix	Provide distance between LHP & GHP MCC and main power station.	Bidder to refer plot plan. Location of LHP GHP MCC to be decided by Bidder without disturbing BHEL Other facilities.

Corrigendum - II dated 18/06/2026 to CPC Tender No. BHEL/CPC/KRD/EPC_LHP_GHP/27/023

Sl. No.	Section/ Clause No	Specification/ Existing Provision	Bidder's Query	BHEL Clarification
31	TECHNICAL CONDITIONS OF CONTRACT (TCC): Annexure-3-Electrical Scope Matrix	LT switchgear along with Y Link for IMC shall be in Bidder's Scope. Scope for profibus connections from Y-Link to LHP-GHP DCS is in bidder's scope. Further connection from LHP-GHP DCS to Main Plant Control Room/ FGD control room shall be in BHEL EDN scope.	Clarify Y-Link/Profibus scope and DCS distance.	Scope is clear regarding the scope of Y-Link. DCS RIO panels will be located d in LHP GHP MCC building which is also in bidders scope. However, LHP GHP shall be controlled from ESP cum FGD control room for UNIT # 11 (building 6A of plot plan)

1) **All other terms and conditions against this NIT shall remain unchanged.**
2) **This corrigendum is to be submitted duly signed and stamped along with the Techno-commercial bid (Part- I).**

Enclosed:

a) **Revised Plot Plan dated 10.06.2026. (Page no 10/11) of Annexure-4-of TCC.**
b) **New Annexure to TCC: Annexure-20 to TCC - GA Drawing of Day Silo.**
c) **New Annexure to TCC: Annexure-21 to TCC - Gypsum dewatering building layout.**

for BHARAT HEAVY ELECTRICALS LTD
Manager/ Purchase

Revised Plot Plan dated 10.06.2026. (Page no 10/11) of Annexure-4-of TCC

FIRST ANGLE PROJECTION

ALL DIMENSIONS ARE IN MM

DRAWING No. PE-DG-527-100-M002

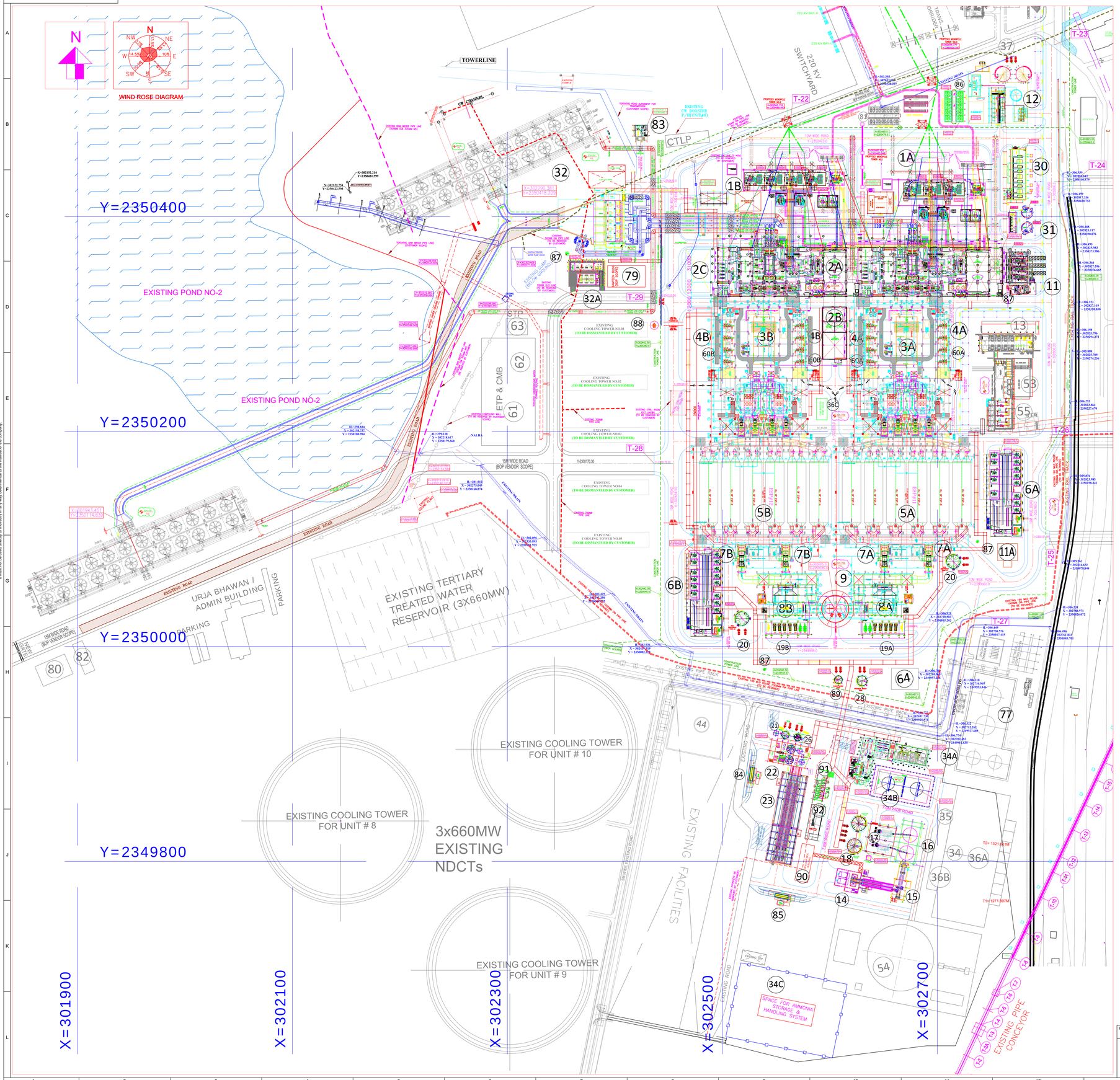

LEGEND

	BTG AREA ROAD
	BoP AREA ROAD
	BTG PIPE CUM CABLE RACK
	CONSTRUCTION POWER

Sl No.	Item Description	Item No.	Unit	Scope
1	Transformer Yard#11	1A	11	BTG
2	Transformer Yard#12	1B	12	BTG
3	Power House Building (PHB)	2A	11&12	BTG
4	Control Building	2B	11&12	BTG
5	Service Building	2C	11&12	BTG
6	Boiler Structure of Unit#11	3A	11	BTG
7	Boiler Structure of Unit#12	3B	12	BTG
8	Mill Bunker Bay/Building of Unit#11	4A	11	BTG
9	Mill Bunker Bay/Building of Unit#12	4B	12	BTG
10	ESP of Unit#11	5A	11	BTG
11	ESP of Unit#12	5B	12	BTG
12	ESP CUM FGD CTRL. BLDG. Unit#11	6A	11	BTG
13	ESP CUM FGD CTRL. BLDG. Unit#12	6B	12	BTG
14	ID Fans of Unit#11	7A	11	BTG
15	ID Fans of Unit#12	7B	12	BTG
16	FGD Absorber of Unit#11	8A	11	BTG
17	FGD Absorber of Unit#12	8B	12	BTG
18	Chimney	9	11&12	BTG
19	DG Building	11	11&12	BTG
20	DG Building (FGD)	11A	11&12	BTG
21	CPU Regeneration Area	12	11&12	BTG
22	AHP Compressor House & AHP ctrl. Building	13	11&12	BOP
23	Lime unloading shed	14	11&12	BTG
24	Lime crusher and screen house	15	11&12	BTG
25	Lime Storage Silos	16	11&12	BTG
26	Ball Mill Building(BMB)	17	11&12	BTG
27	Lime Slurry Tanks	18	11&12	BTG
28	Lime Slurry Recirculation Pump House-1	19A	11	BTG
29	Lime Slurry Recirculation Pump House-1	19B	12	BTG
30	Auxiliary Absorent Tank-A/B	20	11&12	BTG
31	Primary Hydro-cyclone Feed Tank	21	11&12	BTG
32	Gypsum Dewatering Buiding	22	11&12	BTG
33	Gypsum Storage Shed	23	11&12	BTG
34	Secondary Hydro-cyclone Feed Tank	25	11&12	BTG
35	FGD Waste Water Tank	26	11&12	BTG
36	FGD - Process Water Tank	28	11&12	BTG
37	FGD - Filtrate Water Tank	29	11&12	BTG
38	Plant (IA & SA) Air Compressor House	30	11&12	BTG
39	Condensate Storage tanks & CTPs	31	11&12	BTG
40	CW Pump House	32	11&12	BTG
41	CW Treatment and Chlorination Area	32A	11&12	BTG
42	Cooling Tower (IDCT) - 1	33A	11&12	BOP
43	Cooling Tower (IDCT) - 2	33B	11&12	BOP
44	Filter water cum fire water storage tank	34	11&12	BOP
45	Fuel Oil Pump House	34A	11&12	BTG
46	Fuel Oil Tanks	34B	11&12	BTG
47	Ammonia Storage Tank/ Shed	34C	11&12	BTG
48	Filter water cum fire water pump house	35	11&12	BOP
49	Fire water storage tank	36A	11&12	BOP
50	Fire water pump house	36B	11&12	BOP
51	RO-DM	37	11&12	(DELETED)
52	Fire Water Booster Pump House	36C	11&12	BTG
53	Ash water tank/ pump house	53	11&12	BOP
54	Ash water recovery pump house	54	11&12	BOP
55	Ash slurry tank & pump house	55	11&12	BOP
56	Mill Reject Silo of Unit#11	60A	11	BTG
57	Mill Reject Silo of Unit#12	60B	12	BTG
58	Fire station	64	11&12	BOP
59	FOPH of existing 3x660MW plant	77	11&12	BOP
60	Car parking(BOP Area)	81	11&12	BOP
61	Safety Ctrl.Room (10.85MX10.0M)	83	11&12	BTG
62	Weigh Bridge for GHP	84	11&12	BTG
63	Weigh Bridge for LHP	85	11&12	BTG
64	Car parking(30Mx28M)	86	11&12	BTG
65	Sewage sump	87	11&12	BTG
66	Blow Down Tank	88	11&12	BTG
67	Clear Water Tank	89	11&12	BTG
68	LHP GHP MCC Building	90	11&12	BTG
69	LHP GHP Pump House	91	11&12	BTG
70	Payloader shed with Parking & Maintenance space	92	11&12	BTG

NOTES:–

1. ALL DIMENSIONS ARE IN MM & LEVELS ARE IN METER UNLESS OTHERWISE STATED.
2. MAIN PLANT FINISHED GRADED LEVEL (FGL) SHALL BE RL(+)304.75M.
3. ±0.00 OF MAIN PLANT AREA CORRESPONDS TO RL(+)305.25M.
   3.1. FFL OF TG HALL BUILDING EL. 0.00M
   3.2. TOP OF PAVING FOR BOILER / ESP AREA EL. (–) 0.20M
   3.3. TOP OF PAVING FOR TRANSFORMER YARD EL. (–) 0.10M
   3.4. FFL OF MILL BUNKER BUILDING AND CHIMNEY EL. 0.00M
   3.5. FFL OF OTHER BUILDINGS IN MAIN PLANT AREA EL. 0.00M
4. ROUTING OF VARIOUS PIPES AS SHOWN ARE TENTATIVE. SAME WILL BE ROUTED AS PER SITE FEASIBILITY.
5. THE FACILITIES/ BUILDINGS SHOWN IN THE TABLE ABOVE ARE TENTATIVE & SHALL BE PROVIDED AS PER CONTRACT.
6. DIMENSIONS AND LOCATION SHOWN ARE ALSO TENTATIVE & SHALL BE FINALIZED DURING DETAILED ENGINEERING.
7. EXITING FACILITIES WHICH ARE FOULING WITH ENVISAGED FACILITIES OF UPCOMING UNIT#11&12 (AS SHOWN) SHALL BE RE-ROUTED /DISMANTLED BY CUSTOMER.
8. EXISTING IDCT CONTROL ROOM(UNIT#6) WHICH IS FOULING WITH BTG ROAD SHALL BE RE-LOCATED/DISMANTLED BY CUSTOMER.
9. BTG ROAD TERMINAL POINTS ARE MARKED FROM T–22 TO T–29,FURTHER ROAD CONNECTION SHALL BE IN BOP VENDOR/CUSTOMER SCOPE.

PROGRESSIVE COPY DTD 10.06.26

REV.	DATE	ALTD	CHD	APPD
02	01.11.2025	GKM	GSF	BKA

1.SAFETY CONTROL ROOM (ITEM NO.83) ADDED.
2.EXISTING FACILITES (CUSTOMER SCOPE) SHOWN IN REVISED DRAWING.
3.LHP,GHP & BMB RELOCATED.
4.BTG ROAD REVISED INLINE WITH EXISTING FACILITES ALONG WITH BTG ROAD TPs.
5.NOTE NO.7,8 AND 9 ADDED.
6.DRAWING GENERALLY REVISED.

REV.	DATE	ALTD	CHD	APPD
01	16.05.25	GKM	GSF	BKA

1. DRAWING REVISED AS PER MSPGCL/STEAG COMMENTS(REF. NO. ETS061-BHEL-PEM-0001).
2. LOCATION OF LHP & GHP SHOWN INLINE TENDER PLOT PLAN.
3. EXISTING IDCT@6 SHOWN.
4. EXISTING CW LINE UNIT#6 SHOWN.
5. EXISTING FACILITIES ARE SHOWN AS TENDER TOPOGRAPHY SURVEY.
6. DRAWING GENERALLY REVISED.

CUSTOMER: MAHAGENCO — MAHARASHTRA STATE POWER GENERATION CO. LTD. KORADI THERMAL POWER STATION 2x660 MW UNITS –11&12 PROJECT

CONSULTANT: steag energy services — STEAG ENERGY SERVICES (INDIA) PVT. LTD.

JOB NO. 527

STATUS CONTRACT

DISTRIBUTION

BHARAT HEAVY ELECTRICALS LTD POWER SECTOR PROJECT ENGINEERING MANAGEMENT NOIDA

COPY RIGHT AND CONFIDENTIAL
The information on this document is the property of BHARAT HEAVY ELECTRICALS LIMITED it must not be used directly or indirectly in any way deterimental to the interest of the company.

DEPT CODE		NAME	SIGN	DATE
M	DRN	GKM	Sd/–	03.04.2025
	DESN	GKM	Sd/–	03.04.2025
	CHD	GSF	Sd/–	03.04.2025
	APPD	BKA	Sd/–	03.04.2025

TITLE: MAIN EQUIPMENT PLAN LAYOUT

DEPT. | SCALE 1:1000 | SIGN

DRAWING NO. PE-DG-527-100-M002

SHEET 1 OF 1 | REV. 2A | SIZE-A0

COMPUTER FILE NAME: PE-DG-527-100-M002-R2.DWG

COPY RIGHT AND CONFIDENTIAL
The information on this document is the property of BHARAT HEAVY ELECTRICALS LIMITED
It must not be used directly or indirectly in any way deterimental to the interest of the company.

Annexure-20 to TCC - GA Drawing of Day Silo

DRAWING NO. 0-00-620-87143

FIRST ANGLE PRJECTION

ALL DIMENSIONS ARE IN MM

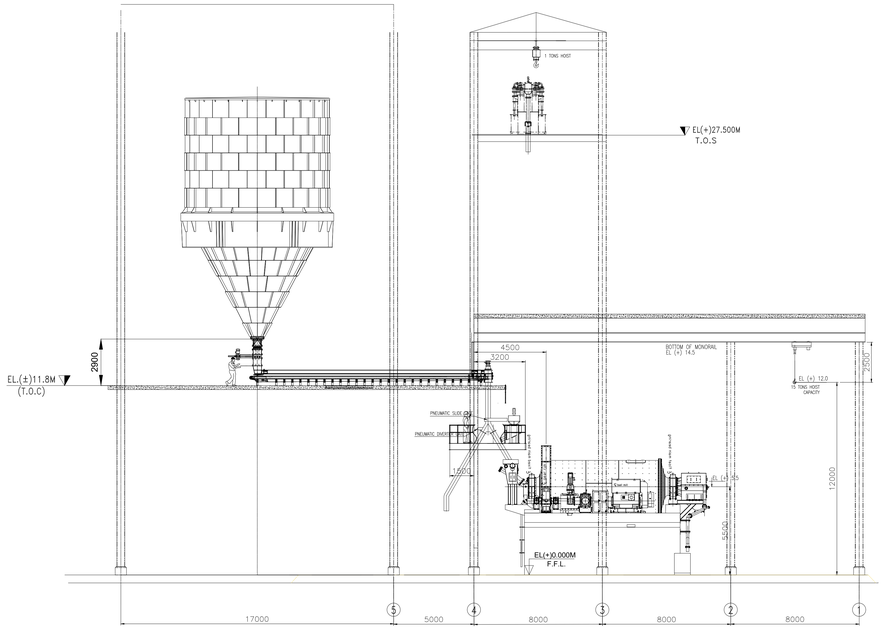

VIEW A-A(Passenger elevator not shown for clarity)

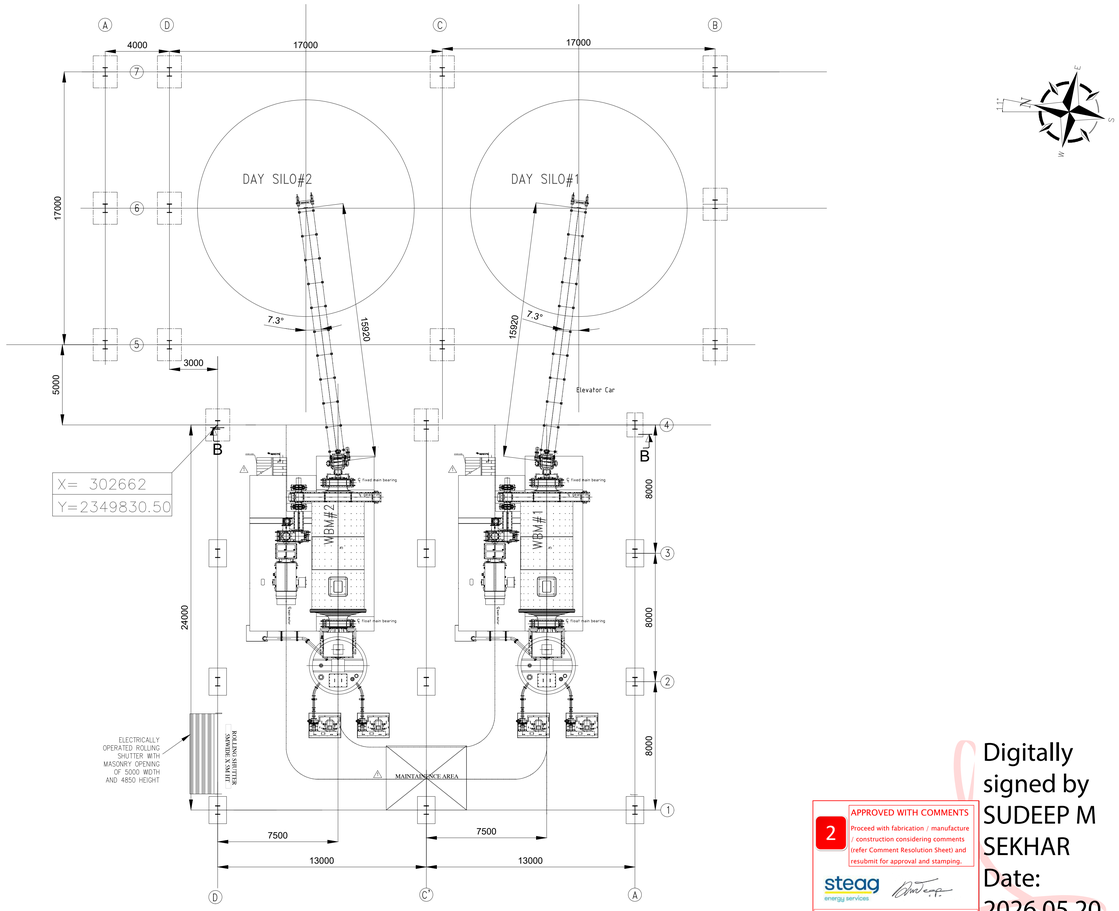

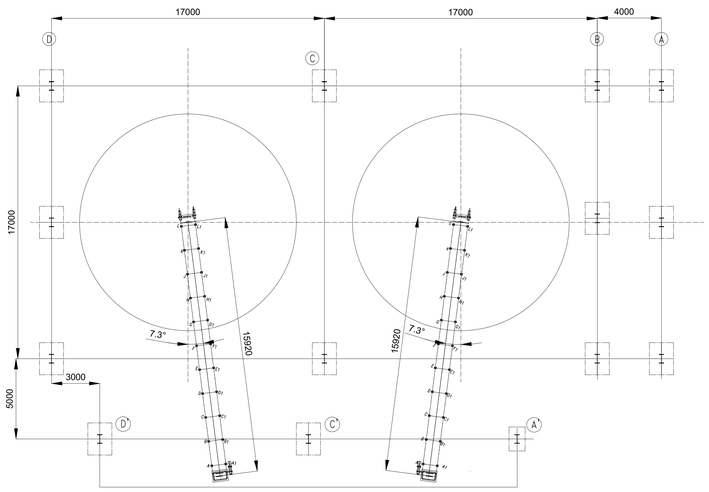

FLOOR PLAN AT +11.80M LEVEL(NOT TO EXCEED)

LOAD DATA FOR WEIGH FEEDER

COLUMN	A	A1	B	B1	C	C1	D	D1	E	E1	F	F1	G	G1	H	H1	J	J1	K	K1	L	L1
STATIC LOAD (KG.)	507	507	477	477	477	477	477	477	477	477	477	477	477	477	477	477	477	477	477	477	507	507
HORIZONTAL LOAD (KG.)	228	228	215	215	215	215	215	215	215	215	215	215	215	215	215	215	215	215	215	215	228	228
DYNAMIC LOAD (KG.)	634	634	596	596	596	596	596	596	596	596	596	596	596	596	596	596	596	596	596	596	634	634

APPROVED WITH COMMENTS

2

Proceed with fabrication / manufacture / construction considering comments (refer Comment Resolution Sheet) and resubmit for approval and stamping.

steag energy services

Kindly note that approval of the drawing / documents does not absolve the contractor / vendor from his contractual obligations

Digitally signed by SUDEEP M SEKHAR
Date: 2026.05.20 14:31:51 +05'30'

REV.	DATE	DESCRIPTION	PPD	CHD	APPD
01	05.05.2026	REVISED AS PER CUSTOMER COMMENTS	PVSB	PVSB	AMAN

PROJECT: KORADI THERMAL POWER STATION 2 x 660 MW UNITS - 11 & 12 PROJECT

OWNER: MAHAGENCO — MAHARASHTRA STATE POWER GENERATION CO. LTD.

OWNER'S CONSULTANT: steag energy services — STEAG ENERGY SERVICES (INDIA) PVT. LTD.

EPC CONTRACTOR (BTG PACKAGE): BHARAT HEAVY ELECTRICAL LTD.

SUB VENDOR / CONTRACTOR: BHARAT HEAVY ELECTRICAL LTD.

TITLE: GENERAL ARRANGEMENTS OF LIMESTONE DAY SILOS & WET BALL MILL BUILDING

DRAWING No.				SHEET	SIZE
0-62-211-00095				1 OF 1	A0
DATE: 02.08.2025	SCALE: NTS	DRAWN BY: MTT	CHECKED BY: PVSB	APPROVED BY: AMAN	REV. 01

SIZE-A0

COPYRIGHT AND CONFIDENTIAL
The information on this document is property of BHARAT HEAVY ELECTRICALS LIMITED. It must not be used directly or indirectly for any purpose detrimental to the interest of the company.

ELECTRONIC FILE NAME:

Annexure-21 to TCC - Gypsum dewatering building layout

COPY RIGHT AND CONFIDENTIAL
The information on this document is the property of BHARAT HEAVY ELECTRICALS LIMITED
it must not be used directly or indirectly in any way deterimental to the interest of the company.

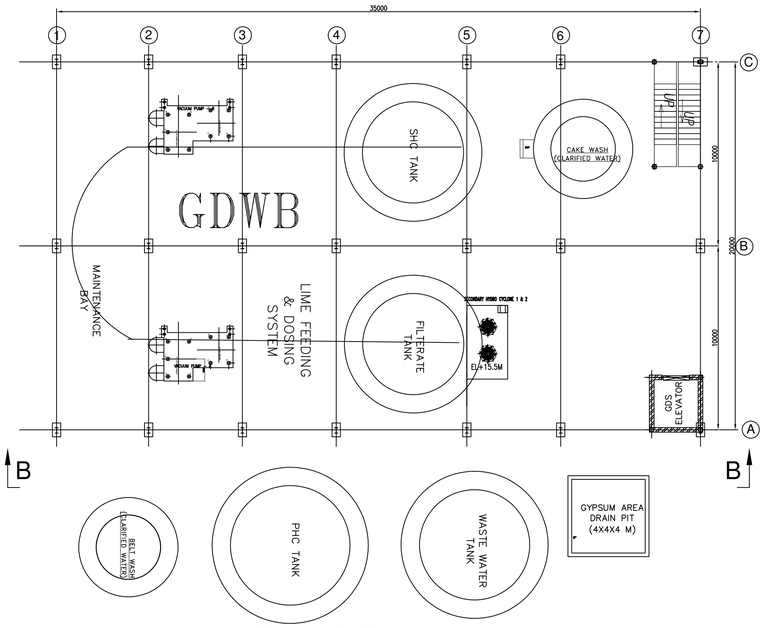

PLAN @ EL(+)0.0 m

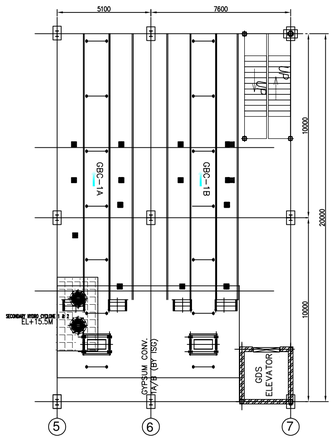

PLAN @ EL(+)9.0 M & EL(+)15.5 M

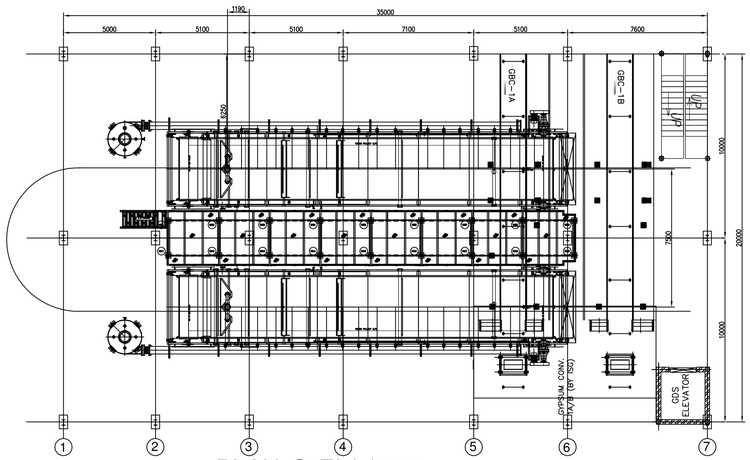

PLAN @ EL(+)21.0 m

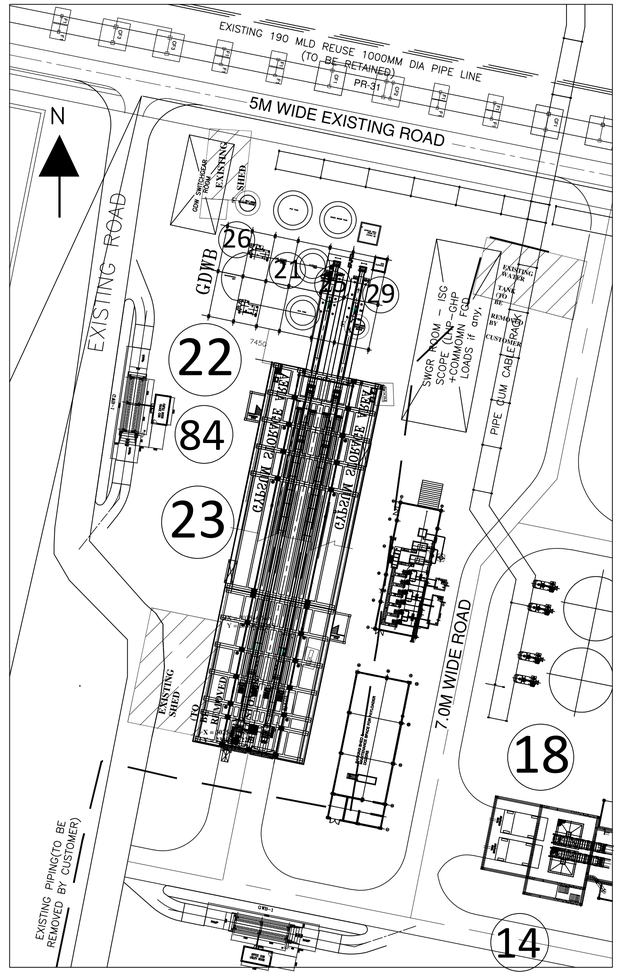

KEY PLAN

Note

1) EL(+/-)0.0M CORRESPONDS TO RL(+)305.25M

2) This layout drawing is conceptual layout of GDW building. Location of equipment may slightly varyas per requirement of the system and Layout shall be finalised with GDWS supplier.

CUSTOMER MAHAGENCO	MAHARASHTRA STATE POWER GENERATION CO. LTD. KORADI THERMAL POWER STATION 2x660 MW UNITS –11&12 PROJECT	
CONSULTANT steag ENERGY SERVICES	STEAG ENERGY SERVICES (INDIA) PVT. LTD.	
कार्य संख्या- JOB NO. 527 स्थिति STATUS CONTRACT मुद्रण स्केल मीटर मे PRINT SCALE IN METRE 0 2 4 6 8 10 20 30 40 50	भारत हेवी इलेक्ट्रिकल्स लिमिटेड BHARAT HEAVY ELECTRICALS LTD पावर सेक्टर/POWER SECTOR परियोजना अभियांत्रिकी प्रबंधन PROJECT ENGINEERING MANAGEMENT नोएडा (उ.प्र.)/NOIDA (U.P.)	DEPT CODE A
शीर्षक/TITLE	BUILDING LAYOT - GYPSUM DEWATERING BUILDING	

	नाम NAME	हस्ताक्षर SIGNATURE	दिनांक DATE
तैयारकर्ता/DRN	DSR		14.11.2025
डिजाइनकर्ता/DESN	DSR		14.11.2025
जांचकर्ता/CHD	WH		14.11.2025
अनुमोदनकर्ता/APPD	WH		14.11.2025

दिनांक DATE	परिवर्तितकर्ता ALTD	जांचकर्ता CHD	अनुमोदनकर्ता APPD

एमपीएल MPL	सिविल CIVIL	इलेक्ट्रिकल ELEC	सीएण्डआई C&I	एमएसई MSE	मैक्स MAX	विभाग DEPT.	स्केल – SCALE–
						हस्ताक्षर SIGN दिनांक DATE	

ड्राईंग संख्या/ DRAWING NO.
PE-DG-527-571-A001

शीट SHEET 01 OF 02 | पुनरीक्षण REV. 0

फार्मेट साइज A2
FORMAT SIZE A2

DRAWING NO. -PE-DG-527-501-A001

ALL DIMENSIONS ARE IN MM

FIRST ANGLE PROJECTION

COPY RIGHT AND CONFIDENTIAL
The information on this document is the property of BHARAT HEAVY ELECTRICALS LIMITED
it must not be used directly or indirectly in any way deterimental to the interest of the company.

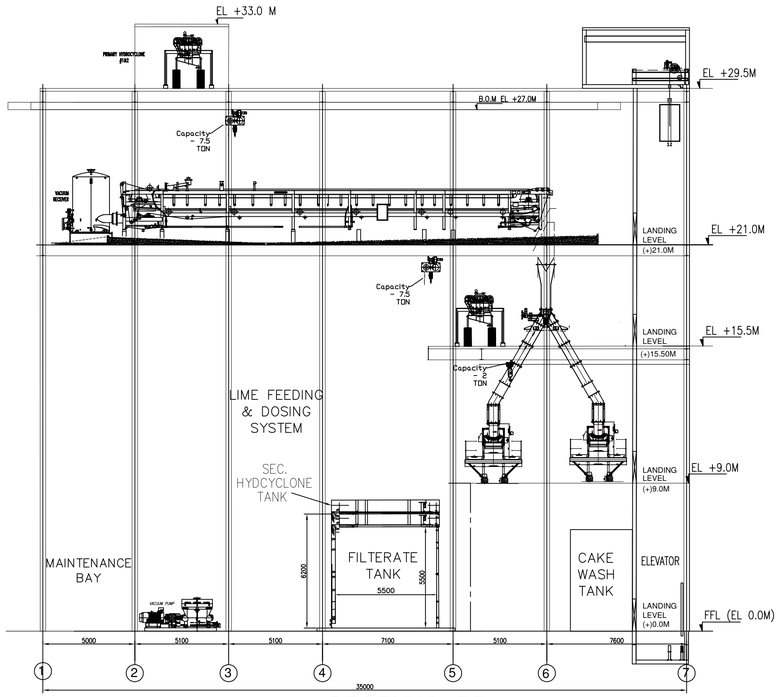

SECTION - BB

LIST OF EQUIPMENT

LIST OF ITEMS				
EQ. No.1	QUANTITY	EQUIPMENT DESCRIPTION	TENTATIVE WEIGHT EACH	REMARK
1	2	VACCUM BELT FILTER	WORKING 70T	
2	2	VACCUM RECEIVER	WORKING 7T	
3	2	VACCUM PUMP	WORKING 15T	
4	2	PRIAMARY HYDROCYCLONE	WORKING-10T	
5	2	SECONDARY HYDROCYCLONE	WORKING-7 T	
6	1	BELT FILTER WASH TANK WITH PUMPS	PUMP-250 KG	
7	1	NEUTRALISATION TANK	WORKING-1.0 T	
8	1	LIME SILO WITH ROTARY FEEDER ALONG WITH SUPPORTING STRUCTURE	–	ABOVE NEUTRALISATION TANK
9	1	SCREW CONVEYOR	–	ABOVE NEUTRALISATION TANK
10	1	BUCKET ELEVATOR		
11	1	PRIMARY HYDROCYCLONE FEED TANK WITH PUMPS		
12	1	FILTERATE TANK WITH PUMPS		
13	1	CAKE WASH TANK WITH PUMPS	PUMP-250 KG	
14	1	WASTE WATER TANK WITH PUMPS		
15	1	FILTERATE TANK WITH PUMPS	–	
16	1	SEC. HYDROCYCLONE FEED TANK WITH PUMPS	–	OUTSIDE BUILDING

Note

1) EL(+/-)0.0M CORRESPONDS TO RL(+)305.25M

2) This layout drawing is conceptual layout of GDW building. Location of equipment may slightly varyas per requirement of the system and Layout shall be finalised with GDWS supplier.

CUSTOMER	MAHAGENCO
	MAHARASHTRA STATE POWER GENERATION CO. LTD. KORADI THERMAL POWER STATION 2x660 MW UNITS -11&12 PROJECT
CONSULTANT	steag ENERGY SERVICES
	STEAG ENERGY SERVICES (INDIA) PVT. LTD.
कार्य संख्या- JOB NO.	527
स्थिति STATUS	CONTRACT
मुद्रण स्केल मीटर में PRINT SCALE IN METRE	0 2 4 6 8 10 20 30 40 50
	भारत हेवी इलेक्ट्रिकल्स लिमिटेड BHARAT HEAVY ELECTRICALS LTD पावर सेक्टर/POWER SECTOR परियोजना अभियांत्रिकी प्रबंधन PROJECT ENGINEERING MANAGEMENT नोएडा (उ.प्र.)/NOIDA (U.P.)
शीर्षक/TITLE	BUILDING LAYOT - GYPSUM DEWATERING BUILDING

DEPT CODE		नाम NAME	हस्ताक्षर SIGNATURE	दिनांक DATE
A	तैयारकर्ता/DRN	DSR		14.11.2025
	डिजाइनकर्ता/DESN	DSR		14.11.2025
	जाँचकर्ता/CHD	WH		14.11.2025
	अनुमोदनकर्ता/APPD	WH		14.11.2025

दिनांक DATE	परिवर्तितकर्ता ALTD	जाँचकर्ता CHD	अनुमोदनकर्ता APPD

एमपीएल MPL	सिविल CIVIL	इलेक्ट्रिकल ELEC	सीएण्डआई C&I	एमएसई MSE	मैक्स MAX	विभाग DEPT.	स्केल – SCALE–
						हस्ताक्षर SIGN दिनांक DATE	

ड्राईंग संख्या / DRAWING NO. PE-DG-527-571-A001

शीट SHEET 02 OF 02 पुनरीक्षण REV. 0

फार्मेट साइज A2
FORMAT SIZE A2