BHARAT HEAVY ELECTRICALS LIMITED
PROJECT ENGINEERING MANAGEMENT, NOIDA

Date-20-Jul-19

CORRIGENDUM- 01

PROJECT	:	1 x 660 MW Panki STPP
PACKAGE	:	FUEL OIL HANDLING AND STORAGE SYSTEM
ENQUIRY NO	:	PE/PG/PKI/E-6256/2019 Dt. 04.07.2019
SUBJECT	:	Pre – Bid replies + Local Content

Type of Corrigendum			
Technical Corrigendum -	☑	Commercial Corrigendum -	☑

In reference to the above mentioned tender enquiry please note the following.

1. Replies of Pre-Bid queries (attached).
2. In line with cl no 47 of NIT, the minimum local content for FY 2019-20 for this package is 100%.

All the other terms and conditions of the tender enquiry remain unchanged. All the bidders are requested to quote accordingly.

Corrigendum

Yours faithfully,

For and on behalf of BHEL

VINIT KUMAR VERMA

Digitally signed by VINIT KUMAR VERMA
DN: c=IN, o=BHARAT HEAVY ELECTRICALS LIMITED, postalCode=201301, st=Uttar Pradesh, 2.5.4.20=6548fa91156ed58ab733462e2c216ee861e12e8b63f3f0fdc6527323d5766b2f, serialNumber=8b7f06e2ef4d7d5cb58c26fb12c7db987c445ca810453d3685305ea07a561880, cn=VINIT KUMAR VERMA
Date: 2019.07.20 14:15:31 +05'30'

Vinit Kumar Verma
Dy. Manager

PRE BID CLARIFICATION SCHEDULE				
Project:	**1 x 660MW UPRVUNL PAKNI TPS, EXTENSION**			
Sr.No.	**Section/Clause/ Page No.**	**Statement of the referred clause**	**Clarification/ Confirm action required**	**BHEL Reply**
A	**Mechanical**			
1	SPECIFICATION NO. PE-TS-426-166-A001 / Page no. 157 of 593 / Cl. No. 22.8.0	Technical Specification & Datasheet for Tanks	Dimensions of LDO storage tanks & DOT not given in the specification. Please provide.	Please refer page no 301 of the specification ,minimum dimenssion of LDO Tank is 16.0M Dia X 12.0M Height and for Drain Oil Tank minimum dimenssion to be considered as 3.0M(L)x3.0M(W)x2.0M(H).
2	SPECIFICATION NO. PE-TS-426-166-A001 / Page no. 161 of 593 / Cl. No. 22.8.4.10	---	Min. pipe thickness given for 400NB size oil line in the referred clause (6.35mm) is contradicting with the thickness specified in P&ID (7.14mm). Please clarify which thickness to be considered.	Bidder to follow the customer specification
3	SPECIFICATION NO. PE-TS-426-166-A001 / Page no. 170 of 555 / Cl. No. 22.9.9	Pumps technical datasheet.	As proposed facility is not envisaged to handle HFO, we consider viscosity of media to be handled by drain oil pumps as 2-20CSt instead of 50-500cst. Please confirm.	Bidder to provide system considering LDO fuel.
4	SPECIFICATION NO. PE-TS-426-166-A001 / Page no. 171 of 593 / Cl. No. 22.10.1	Control interlocks for safe operation of various pumps shall be provided in DDCMIS provided by bidder. Similar operations and controls shall be provided for **inter tank transfer system** also.	Inter tank transfer system is not indicated in P&ID's. Hence we are ignoring this clause. Please confirm.	Inter tank transfer is not in bidder scope.
5	SPECIFICATION NO. PE-TS-426-166-A001 / Page no. 156 of 593 /Cl.No.22.7.5	The tank shall be fitted with a heating coil of suitable surface area to be heated by hot condensate. The condensate-heating coil shall be made of 40 mm dia. Seamless tubes as per ASTM-A-106 Grade-B. The drain oil tanks shall also be insulated and cladded as specified elsewhere in this specification.	Since the facility is not envisaged for handling of HFO, we shall not consider any heating coil for drain oil tank. Please confirm.	Bidder to provide system considering LDO fuel.
6	SPECIFICATION NO. PE-TS-426-166-A001 / Page no. 301 of 593 / Drg. No. PE-DG-426-166-A002	---	In the referred drawing twin simplex strainers are shown in the each suction line of LDO unloading pumps, where as in the P&ID single strainer is shown. Please confirm the actual requirement.	Bidder to follow the P&ID.
7	SPECIFICATION NO. PE-TS-426-166-A001 / Page no. 19 of 593 / Cl.No.4.0.0	**TERMINAL POINT:** Effluent from Oil Water Separators : Terminal point shall be 5m from ETP area.	As per referred clause, we understood that waste water separated in OWS shall be transferred to near the ETP facility indicated with area identification no.34 in progressive plot plan. Please confirm.	Bidder to follow the specification.
8	SPECIFICATION NO. PE-TS-426-166-A001 / Page no. 327 & 329 of 593	Regarding patinting specification.	Painting systems are given for C2 & C3 and C4 & C5 environments separately. Please clarify which is applicable for this project. We are considering the following painting specification (PS) for FOHS system. Please confirm. 1. External (Uninsulated) surfaces of LDO tanks - As per PS given under S.No.12. 2. Internal surfaces of LDO & Drain oil tanks - As per PS given under S.No.16. 3. Above ground FO piping (Uninsulated) - As per PS given under S.No.9. Also provide PS to be followed for Underneath of LDO tanks bottom plates.	Bidder to follow painting specification. Painting is subject to customer approval and same shall be provided without any cost implication to BHEL.
9	SUGGESTED PRICE FORMAT, ANNEXURE-II, LIST OF MANDATORY SPARES / Pg. 3 of 8.	---	Please clarify, whether the Quantity of spare items given in sl.no. 1.1, 1.2, 1.3, 1.4 are the quantity required for each pump or for each type of pump.	Bidder to follow the specification.
10	P&ID for LDO system, Drg. No. PE-DG-426-166-A001, Rev.00, Sht. 02 of 02.	Vavle selection criteria for fuel oil line: 300NB & Below - Ball/plug valve Above 300NB - Gate valve	As per given valve selection criteria, Oil line valves shall be of ball and/or plug for line sizes 300NB & below. But from P&ID, we understood that isolation valves for oil lines of sizes 300NB & below are ball valves only. Please confirm. Ball valves are being shown in 500NB LDO unloading pumps common discharge line to LDO storage tanks. But the same shall be gate valves as per referred valve selection criteria. Please clarify.	Bidder to follow valve selection criteria as per technical specification.
11	SPECIFICATION NO. PE-TS-426-166-A001 / Page no. 161 of 593 / Cl. No. 22.8.4.11	Velocity criteria	Both pipe sizes & velocity criteria are provided. Please clarify which to be followed.	Bidder to follow P&ID.
	P&ID for LDO system, Drg. No. PE-DG-426-166-A001, Rev.00, Sht. 02 of 02.	Pipe sizes		
12	P&ID for LDO system, Drg. No. PE-DG-426-166-A001, Rev.00, Sht. 02 of 02.	LDO unloading pumps suction line size	In P&ID, two different sizes (300NB & 250NB) are indicated for LDO unloading pumps suction lines. Please confirm the size to be followed.	Bidder to consider 300NB for suction line.
13	P&ID for LDO system, Drg. No. PE-DG-426-166-A001, Rev.00, Sht. 02 of 02.	Regarding oily water collected in LDO unloading pump house & drain trench area sump pits.	Please clarify whether the oily water collected in the sump pits located in LDO unloading pump house & drain trench shall be transferred up to OWS located at tank farm area by means of pipeline or route it to surface drain available near u/l pump house.	Bidder to follow P&ID.

B	Electrical, Control & Instrumentation			
1	SPECIFICATION NO. PE-TS-426-166-A001 /P&IDs Page 299 of 593	Process & Instrument Diagram for LDO system -sheet 1 of 2	Type of Level Transmitter is not mentioned in tender P&IDs & specifications. Please clarify which type of level transmitter (Radar or Ultrasonic) to be considered.	Ultrasonic Type level transmitters to be considered.
	SPECIFICATION NO. PE-TS-426-166-A001 / SECTION-IC, C&I SPECIFICATION FOR FUEL OIL HANDLING SYSTEM Page 456 & 457 of 593	2.03.00 GUIDED WAVE RADAR TYPE LEVEL TRANSMITTER 2.04.00 Ultrasonic Type level Transmitter		
2	SPECIFICATION NO. PE-TS-426-166-A001 /P&IDs Page 300 of 593	Process & Instrument Diagram for LDO system -sheet 2 of 2	From the referred clause,we understood that triple redundency applicable for HT drives and protection of boiler , turbine and major auxiliaries of main plant whose non- availability may result in 50% loss of unit availability and loss of generation. And dual redundency applicable for LT drives . Whereas in the P&ID you have shown following: **Triple redundancy:** storage tanks level transmitters & unloading pumps common discharge line presure transmitters. **Dual redundancy**: Pressure transmitters at Drain Oil & OWS pit Pumps commom dischange lines, level transmitters at OWS pit, drain oil tank, sump pits & level swith at unloading suction line. **Single instruments:** DPITs across Unloading pump suction Strainers & pressure transmitters at each unloading Pump discharge line. **No transmitters:** Sump pit pumps common discharge lines From the above, redundancy requirement is not clear. We understood that given instruments in PIDS are as per system requirement and we are considering as per P&IDS. If not, please revise PIDS suitably.	Bidder to follow Annexure 1 (G) over and above PID.
	SPECIFICATION NO. PE-TS-426-166-A001 / SECTION-IC, C&I SPECIFICATION FOR FUEL OIL HANDLING SYSTEM Page 408 of 593	ANNEXURE - 1, (g) Redundancy requirements		
3	SPECIFICATION NO. PE-TS-426-166-A001 /P&IDs Page 302 of 593	Plot Plan	Please provide location of Central Control Room in Plot plan.	Location of CCR is in TG building at 17.0m between Grid 2-3 and B-C BAY.
4	SPECIFICATION NO. PE-TS-426-166-A001 /P&IDs Page 309 of 593	III. CONTROL & INSTRUMENTATION (MANDATORYSPARES)	We understood that Mandatory spares given is for complete package. We will quote as per system requirement only. Please confirm.	Supply according to the C&I Mandatory spares list .
5	SPECIFICATION NO. PE-TS-426-166-A001 / SECTION-IC, C&I SPECIFICATION FOR FUEL OIL HANDLING SYSTEM Page 403 of 593	4.0 Power supply derived for Transmitters, contact interrogation, interposing relay and solenoid shall generally be ungrounded 24V D.C only. 15.0 The solenoid operated valves/Dampers/Gate shall have a limit switch for open/close feedback. Solenoid Valve shall be rated for 24V DC only.	We understood from the referred clauses that the requirement of 24V DC for instruments & solenoid valves will be provided by purchaser. Please confirm.	Refer Page no. 403 clause no.13. All supplies shall be in the scope of bidder.
6	SPECIFICATION NO. PE-TS-426-166-A001 / SECTION-IC, C&I SPECIFICATION FOR FUEL OIL HANDLING SYSTEM Page 403 of 593	17.0 Local push buttons in the field shall be in Vendor's scope.	We have not understand the Requirement of local push buttons. Please elaborate the requirement.	Local Push buttons are in BHEL's scope of supply.
7	SPECIFICATION NO. PE-TS-426-166-A001 / SECTION-IC, C&I SPECIFICATION FOR FUEL OIL HANDLING SYSTEM Page 404 of 593	Specific Technical Requirements (C&I): 24.0 DP instruments with minimum Capillary length of 15m is to be supplied.	Referred clauses are contracdicting about requirement of capillary. In the referred instruments specifications capillary asked for temperature gauges & temperature switches only. For pressure measurements (ie., gauges, switches & transmitters) there is no capillary indicated. Whereas in the Specific Technical Requirements (C&I) calls for 15M length of capillary requirement for DP instruments. Please clarify whether capillary is required all other pressure measurements or not. If required specify the length of capillary to be considered.	Bidder to supply capillary as per the system requirement except 15M length of capillary requirement for DP instruments.
	SPECIFICATION NO. PE-TS-426-166-A001 / SECTION-IC, C&I SPECIFICATION FOR FUEL OIL HANDLING SYSTEM Page 455 of 593	2.02.0 0 SPECIFICATIONS FOR PR. GAUGE, D.P. GAUGE, TEMP. GAUGE AND LEVELGAUGE. Temperature gauge		
	SPECIFICATION NO. PE-TS-426-166-A001 / SECTION-IC, C&I SPECIFICATION FOR FUEL OIL HANDLING SYSTEM Page 473 of 593	2.13.00 PROCESS ACTUATED SWITCHES Temperature switches		
8	SPECIFICATION NO. PE-TS-426-166-A001 / SECTION-IC, C&I SPECIFICATION FOR FUEL OIL HANDLING SYSTEM Page 405 of 593	36.0 Bidder to note that all the transmitters/instruments supplied by Bidder shall be rack mounted. The racks shall be preassembled and provided by Bidder. Also no Instruments/ analysers & JBs/Racks should be protruding on the walkway.	From the referred clause,we understood that all transmitters & instruments are to be rack mounted. Please clarify the following: 1. Location of rack to be considered. 2. Length of Capillary for transmitters 3. Specifications/ data sheets & makes list for instrument racks	Bidder to supply as per the system requirement .
9	SPECIFICATION NO. PE-TS-426-166-A001 / SECTION-IC, C&I SPECIFICATION FOR FUEL OIL HANDLING SYSTEM Page 459 of 593	**2.05.00 HART Hand Held calibrator:** The quantity of HART hand held calibrator to be provided by Bidder is listed in Appendix- I to Vol.V, Table IV, Part A of Technical Specifications.	We have not found referred Appendix -I in the tender specifications. Please provide.	Hand Held Calibrator is not in vendor's scope of supply.BHEL shall supply the same.
10	General	--	Instrument Hookup drawings are not provided. Please provide.	Attached for ready reference.

LIST OF INSTRUMENT INSTALLATION DIAGRAM

S.NO.	DESCRIPTION	DWG.NO.	REV.	SHT.NO.
1	LIST OF INSTRUMENT INSTALLATION DIAGRAM	14A14–DWG–I–0010	0	1 OF 19
2	INSTRUMENT INSTALLATION DIAGRAM FOR 'U' TUBE	14A14–DWG–I–0010	0	2 OF 19
3	INSTRUMENT INSTALLATION DIAGRAM FOR FLOW MEASUREMENT.	14A14–DWG–I–0010	0	3A OF 19 3B OF 19
4	INSTRUMENT INSTALLATION DIAGRAM FOR PRESSURE & DIFF. PRESSURE TRANSMITTER/SWITCH (OIL SERVICE)	14A14–DWG–I–0010	0	4 OF 19
5	INSTRUMENT INSTALLATION DIAGRAM FOR PRESSURE & DIFF. PRESSURE TRANSMITTERS/SWITCH (AIR SERVICE)	14A14–DWG–I–0010	0	5 OF 19
6	INSTRUMENT INSTALLATION DIAGRAM FOR PRESSURE & DIFF. PRESSURE TRANSMITTERS/SWITCH (STEAM & LIQUID SERVICE)	14A14–DWG–I–0010	0	6 OF 19
7	INSTRUMENT INSTALLATION DIAGRAM FOR PRESSURE & DIFF. PRESSURE TRANSMITTERS/SWITCH (STEAM & LIQUID SERVICE)	14A14–DWG–I–0010	0	7 OF 19
8	INSTRUMENT INSTALLATION DIAGRAM FOR PRESSURE & DIFF. PRESSURE TRANSMITTERS/SWITCH (FLUE GAS SERVICE)	14A14–DWG–I–0010	0	8 OF 19
9	INSTRUMENT INSTALLATION DIAGRAM FOR LOCAL PRESSURE GAUGE	14A14–DWG–I–0010	0	9 OF 19
10	INSTRUMENT INSTALLATION DIAGRAM FOR FLOW TRANSMITTERS (AIR SERVICE)	14A14–DWG–I–0010	0	10 OF 19
11	IINSTRUMENT INSTALLATION DIAGRAM FOR DIFF. PRESSURE SWITCH/GAUGE/LEVEL SWITCHS	14A14–DWG–I–0010	0	11 OF 19
12	INSTRUMENT INSTALLATION DIAGRAM FOR FLOW TRANSMITTERS (WATER & STEAM SERVICE)	14A14–DWG–I–0010	0	12A OF 19 12B OF 19
13	INSTRUMENT INSTALLATION DIAGRAM FOR LEVEL TRANSMITTERS	14A14–DWG–I–0010	0	13 OF 19
14	INSTRUMENT INSTALLATION DIAGRAM FOR TEMPERATURE STUB	14A14–DWG–I–0010	0	14 OF 19
15	INSTRUMENT INSTALLATION DIAGRAM FOR TEMPERATURE STUB	14A14–DWG–I–0010	0	15 OF 19
16	INSTRUMENT INSTALLATION DIAGRAM FOR AIR PURGING	14A14–DWG–I–0010	0	16 OF 19
17	INSTRUMENT INSTALLATION DIAGRAM FOR LEVEL SWITCH OPTION–1 WITH FLANGED CONNECTION	14A14–DWG–I–0010	0	17 OF 19
18	INSTRUMENT INSTALLATION DIAGRAM FOR LEVEL SWITCH OPTION–2 WITH FLANGED CONNECTION	14A14–DWG–I–0010	0	18 OF 19
19	INSTRUMENT INSTALLATION DIAGRAM FOR CONTROL VALVE (WITH PNEUMATIC ACTUATOR)	14A14–DWG–I–0010	0	19 OF 19

PRELIMINARY

REVIEWED										
			AC	PB	PB	AAM	PRELIMINARY		0	27.01.15
			APPROVED	REVIEWED	CHECKED	DRAWN	DESCRIPTION	RELEASE STATUS	REV.	DATE

INSTRUMENT INSTALLATION DIAGRAM

PANKI THERMAL POWER STATION
1 x 660 MW UNIT
KANPUR (UP)

UTTAR PRADESH RAJYA VIDYUT UTPADAN NIGAM LIMITED

DEVELOPMENT CONSULTANTS PVT. LTD
CONSULTING ENGINEERS

JOB NO. 14A14 | SCALE : NIL

DWG. NO. 14A14–DWG–I–0010 | SHT. 1 OF 19 | REV. 0

FILE NAME 14A14–DWG–I–0010–R0

A3 (9–96) [420x297]

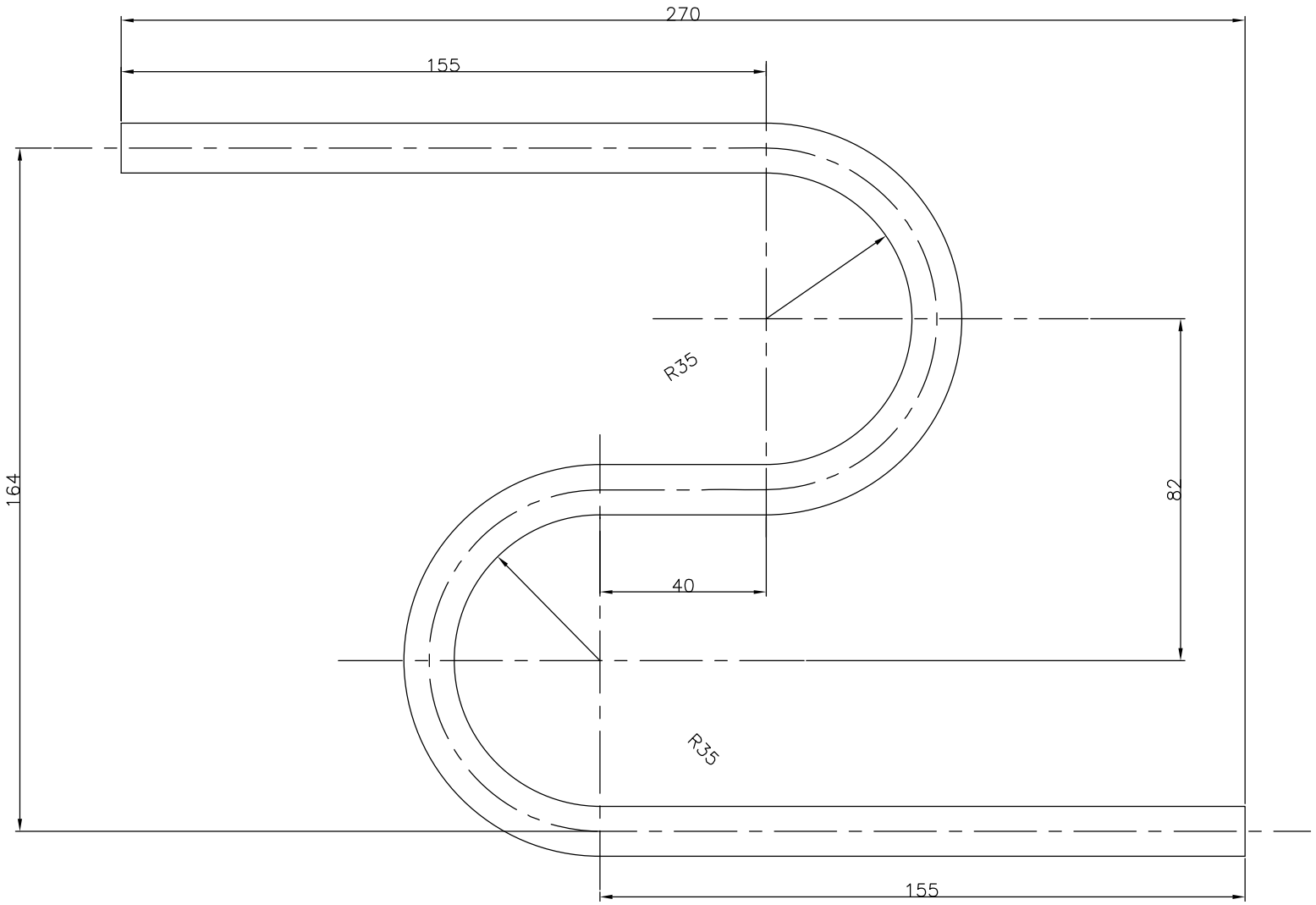

FOR 'U'-TUBE

PRELIMINARY

REVIEWED										
			AC	PB	PB	AAM	PRELIMINARY		0	27.01.15
			APPROVED	REVIEWED	CHECKED	DRAWN	DESCRIPTION	RELEASE STATUS	REV.	DATE

INSTRUMENT INSTALLATION DIAGRAM

PANKI THERMAL POWER STATION
1 x 660 MW UNIT
KANPUR (UP)

UTTAR PRADESH RAJYA VIDYUT UTPADAN NIGAM LIMITED

DEVELOPMENT CONSULTANTS PVT. LTD
CONSULTING ENGINEERS

JOB NO. 14A14 | SCALE : NIL

DWG. NO. 14A14-DWG-I-0010 | SHT. 2 OF 19 | REV. 0

FILE NAME 14A14-DWG-I-0010-R0

A3 (9-96) [420x297]

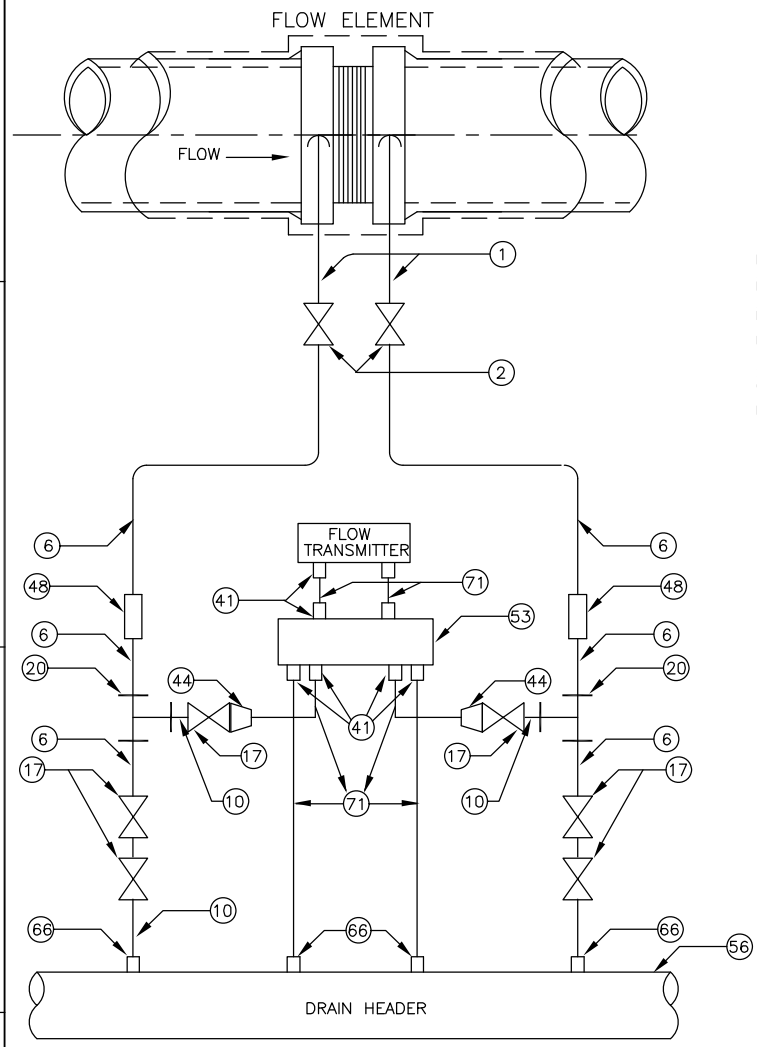

HORIZONTAL PIPE RUN
FIG–A

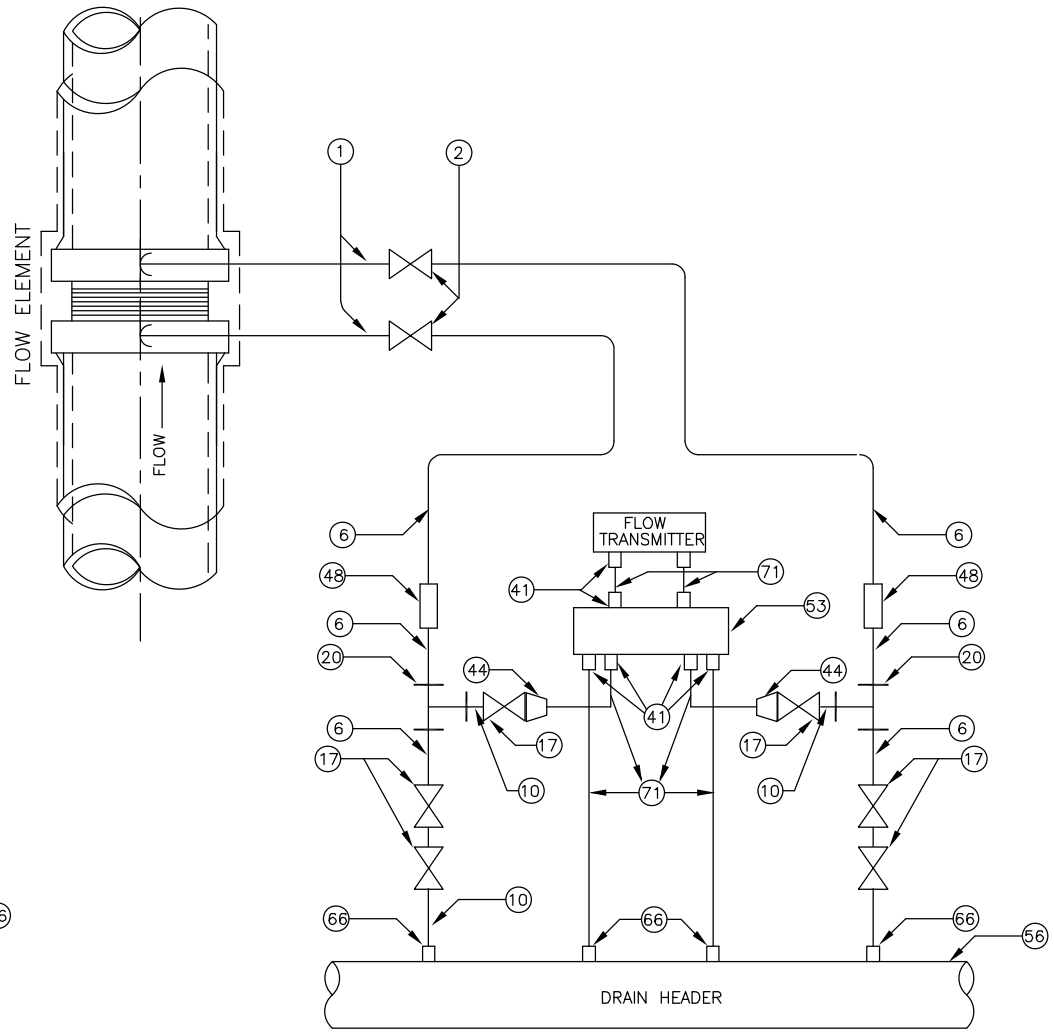

VERTICAL PIPE RUN
FIG–B

NOTE:–

FOR PROCESS PR. ABOVE 40Kg/sqcm DOUBLE VLV.
SHALL BE USED FOR CONNECTION TO THE DRAIN HEADER

FOR FLOW MEASUREMENT

PRELIMINARY

REVIEWED										
			AC	PB	PB	AAM	PRELIMINARY		0	27.01.15
			APPROVED	REVIEWED	CHECKED	DRAWN	DESCRIPTION	RELEASE STATUS	REV.	DATE

INSTRUMENT INSTALLATION DIAGRAM

PANKI THERMAL POWER STATION
1 x 660 MW UNIT
KANPUR (UP)

UTTAR PRADESH RAJYA VIDYUT UTPADAN NIGAM LIMITED

DEVELOPMENT CONSULTANTS PVT. LTD
CONSULTING ENGINEERS

JOB NO. 14A14 | SCALE : NIL

DWG. NO. 14A14–DWG–I–0010 | SHT. 3A OF 19 | REV. 0

FILE NAME 14A14–DWG–I–0010–R0

A3 (9–96) [420x297]

BILL OF MATERIAL FOR FLOW MEASUREMENT

TAG NO.	DESCRIPTION	QTY. A	QTY. B
1	1/2" NPS SCH 80 NIPPLES OF MATERIAL SAME AS MAIN PIPE WITH NECESSARY ATTACH TO FLANGES	AS REQD.	
2	1/2" SOCKET WELDED GLOBE VALVE	2	2
6	1/2" NPS SCH 80/160 CS/AS PIPE	AS REQD.	
10	1/2" NPS SCH 80/160,CS/AS NIPPLE	4	4
17	1/2" SOCKET WELDED CS GLOBE VALVE	4	4
20	1/2" SOCKET WELDED EQUAL TEE CS/AS	2	2
41	1/2"NPT(M)X1/2"OD TUBE COMPRESSION FITTING,SS-316	8	8
44	1/2"BWX1/2"OD COMPRESSION TUBE FITTING,SS-316	2	2
48	1/2" SW, CS/AS BULK HEAD PIPE UNION	2	2
53	5-VALVE MANIFOLD, SS-316	1	1
56	2"NB GI DRAIN HEADER	AS REQD.	
66	1/2" GI SOCKET / FUNNEL	4	4
71	1/2"OD IMPULSE TUBE, SS 316	AS REQD.	

PRELIMINARY

REVIEWED										
			AC	PB	PB	AAM	PRELIMINARY		0	27.01.15
			APPROVED	REVIEWED	CHECKED	DRAWN	DESCRIPTION	RELEASE STATUS	REV.	DATE

INSTRUMENT INSTALLATION DIAGRAM

PANKI THERMAL POWER STATION
1 x 660 MW UNIT
KANPUR (UP)

UTTAR PRADESH RAJYA VIDYUT UTPADAN NIGAM LIMITED

DEVELOPMENT CONSULTANTS PVT. LTD
CONSULTING ENGINEERS

JOB NO. 14A14 | SCALE : NIL

DWG. NO. 14A14-DWG-I-0010 | SHT. 3 OF 19 | REV. 0

FILE NAME 14A14-DWG-I-0010-R0

A3 (9-96) [420x297]

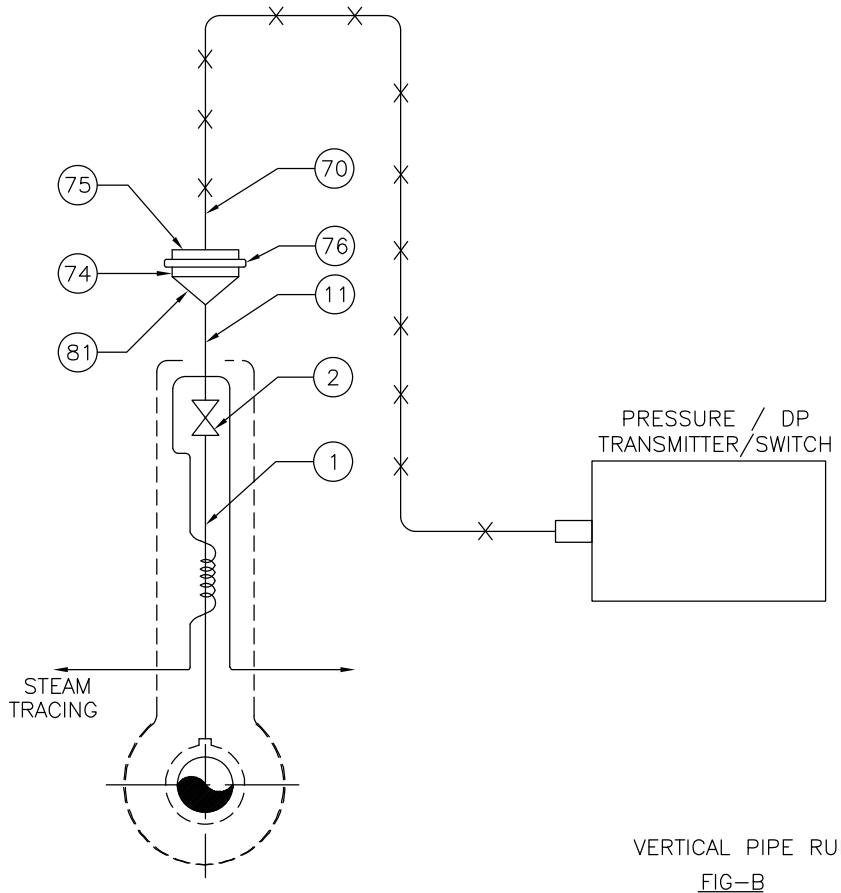

HORIZONTAL PIPE RUN

FIG–A

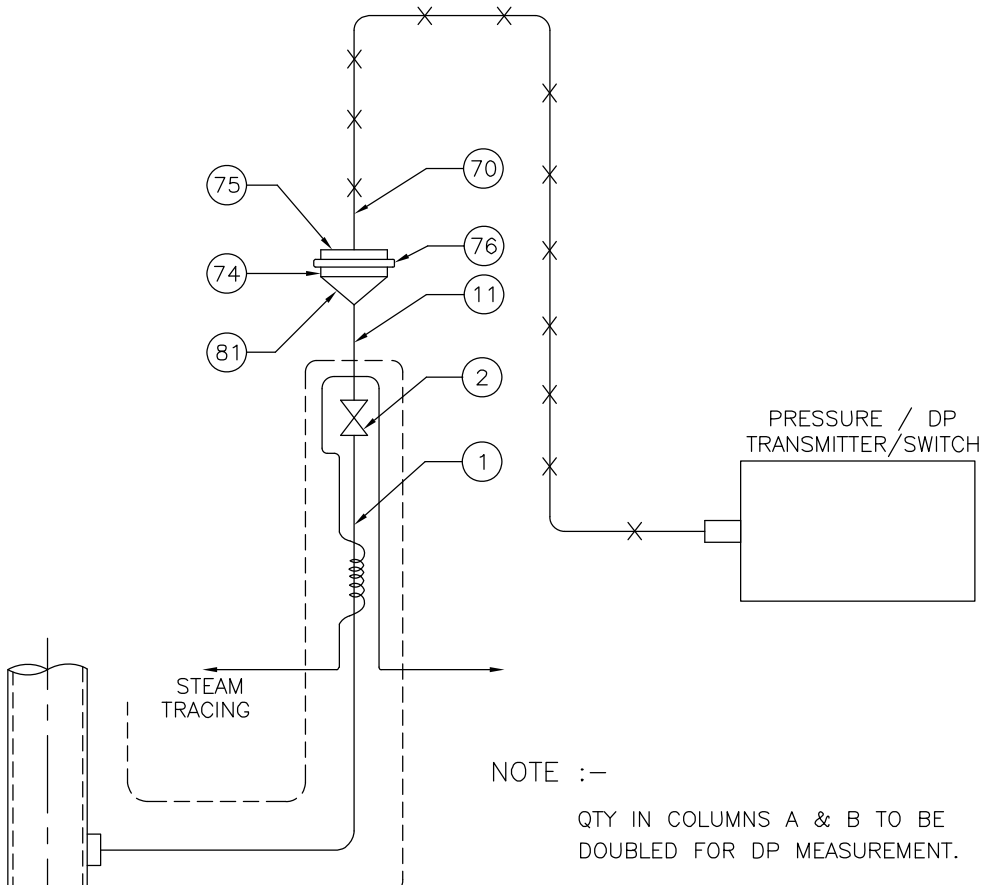

VERTICAL PIPE RUN

FIG–B

NOTE :–

QTY IN COLUMNS A & B TO BE DOUBLED FOR DP MEASUREMENT.

PRESS. & DIFF. PRESS. TRANS./SWITCH (OIL SERVICE)

PRELIMINARY

TAG NO	DESCRIPTION	A	B
		QTY.	
81	1"x2" C.S. EXPANDER, SW	1	1
76	SEAL DIAPHARAGM	1	1
75	2" 300 LBS. ANSI.FLANGE SUPPLIED ALONGWITH INSTRUMENT, BOLT HOLES- 8-190		
74	2" 300 LBS. ANSI.FLANGE BOLT HOLES 8-190	1	1
70	INSTRUMENT CAPALLARY TUBE SS 316	AS REQD.	
11	1" NPS SCH-80/160 CS/AS NIPPLE	1	1
2	1/2"/3/4"/1" ROOT VALVE	1	1
1	1/2"/3/4"/1" CARBON/ALLOY STEEL NIPPLE OF MTL SAME AS THAT OF MAIN PIPE(AS PER PROCESS REQD.)	1	1

BILL OF MATERIAL

REVIEWED										
			AC	PB	PB	AAM	PRELIMINARY		0	27.01.15
			APPROVED	REVIEWED	CHECKED	DRAWN	DESCRIPTION	RELEASE STATUS	REV.	DATE

INSTRUMENT INSTALLATION DIAGRAM

PANKI THERMAL POWER STATION
1 x 660 MW UNIT
KANPUR (UP)

UTTAR PRADESH RAJYA VIDYUT UTPADAN NIGAM LIMITED

DEVELOPMENT CONSULTANTS PVT. LTD
CONSULTING ENGINEERS

JOB NO. 14A14 | SCALE : NIL

DWG. NO. 14A14-DWG-I-0010 | SHT. 4 OF 19 | REV. 0

FILE NAME 14A14-DWG-I-0010-R0

A3 (9-96) [420x297]

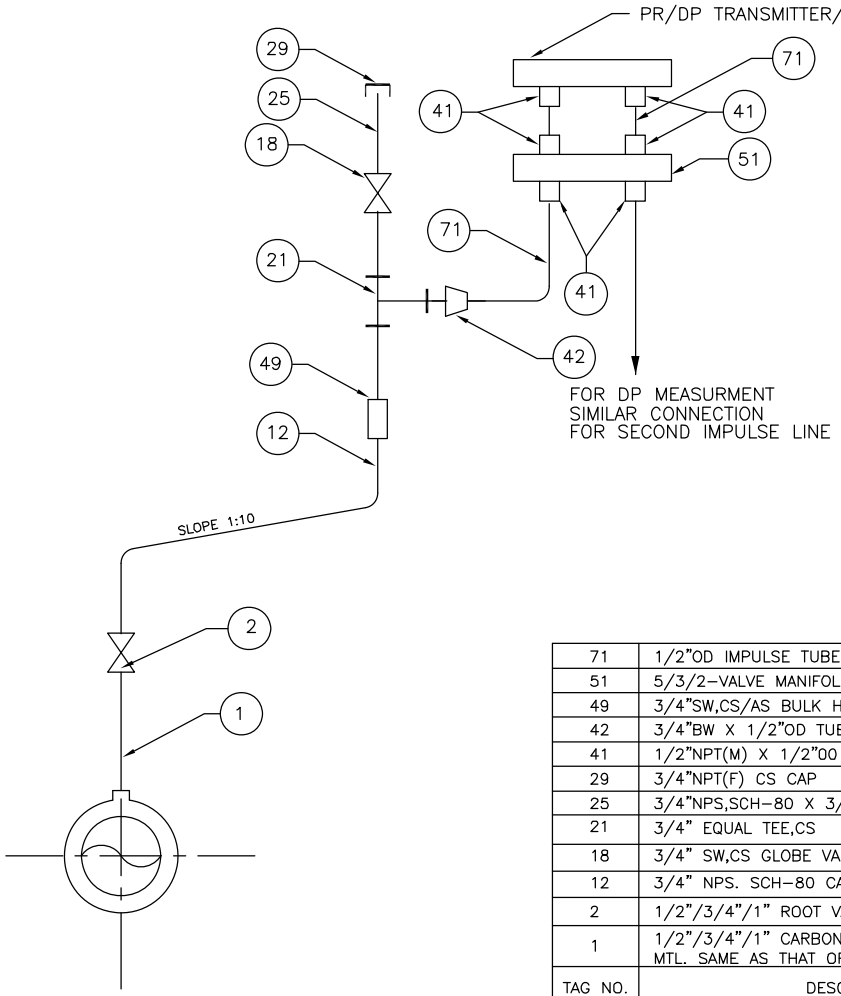

AIR PRESSURE AND DP MEASURMENT
FIG–B

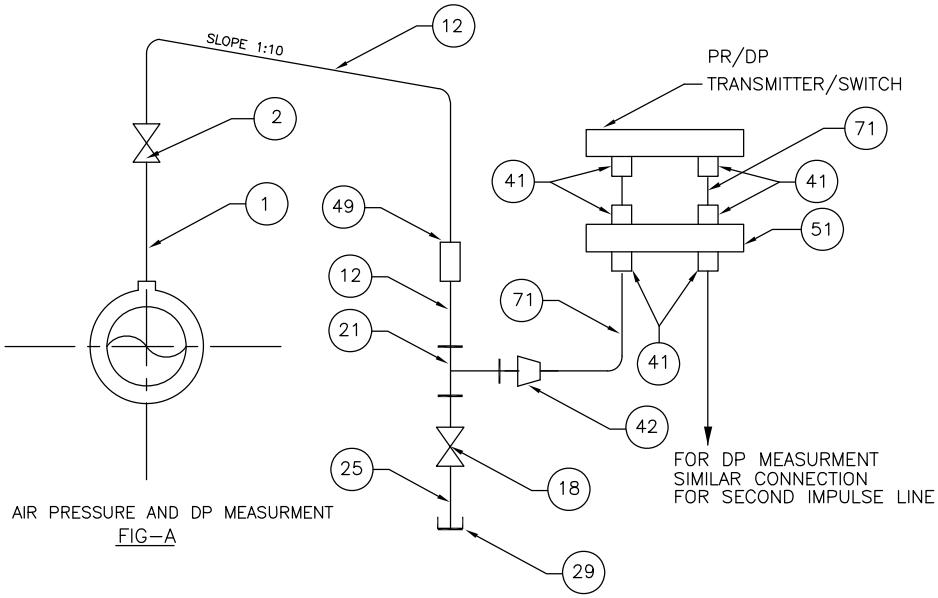

AIR PRESSURE AND DP MEASURMENT
FIG–A

TAG NO.	DESCRIPTION	A	B
		QTY.	
71	1/2"OD IMPULSE TUBE,SS–316	AS REQD.	
51	5/3/2–VALVE MANIFOLDS,SS–316	1	1
49	3/4"SW,CS/AS BULK HEAD PIPE UNION	1	1
42	3/4"BW X 1/2"OD TUBE FITTING,SS–316	1	1
41	1/2"NPT(M) X 1/2"00 TUBE COMPRESSION FITTING,SS–316	6	6
29	3/4"NPT(F) CS CAP	1	1
25	3/4"NPS,SCH–80 X 3/4"NPS(M)CS NIPPLE	1	1
21	3/4" EQUAL TEE,CS	1	1
18	3/4" SW,CS GLOBE VALVE	–	1
12	3/4" NPS. SCH–80 CARBON STEEL PIPE	AS REQD.	
2	1/2"/3/4"/1" ROOT VALVE – SW GLOBE VALVE	1	1
1	1/2"/3/4"/1" CARBON/ALLOY STEEL NIPPLE OF MTL. SAME AS THAT OF MAIN PIPE(AS PER PROCESS REQD.)	AS REQD.	

BILL OF MATERIAL

NOTE:–

QUANTITY IN COLUMN A&B TO BE DOUBLED
FOR DP TAPPING EXCEPT ITEM NO. 51

PRESS. & DIFF. PRESS. TRANS./SWITCH (AIR SERVICE)

PRELIMINARY

REVIEWED										
			AC	PB	PB	AAM	PRELIMINARY		0	27.01.15
			APPROVED	REVIEWED	CHECKED	DRAWN	DESCRIPTION	RELEASE STATUS	REV.	DATE

INSTRUMENT INSTALLATION DIAGRAM

PANKI THERMAL POWER STATION
1 x 660 MW UNIT
KANPUR (UP)

UTTAR PRADESH RAJYA VIDYUT
UTPADAN NIGAM LIMITED

DEVELOPMENT CONSULTANTS PVT. LTD
CONSULTING ENGINEERS

JOB NO. 14A14 | SCALE : NIL
DWG. NO. 14A14–DWG–I–0010 | SHT. 5 OF 19 | REV. 0

FILE NAME 14A14–DWG–I–001D–R0

A3 (9–96) [420x297]

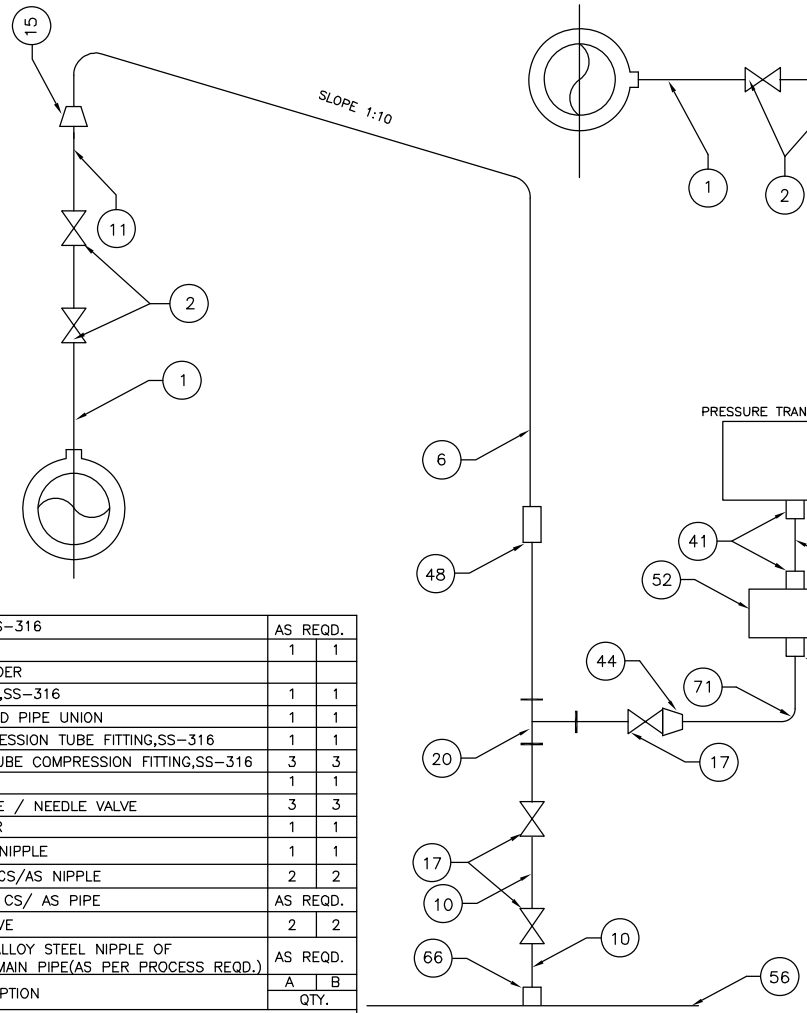

TRANSMITTER MOUNTED BELOW
INSTRUMENT SOURCE POINT

FIG–A

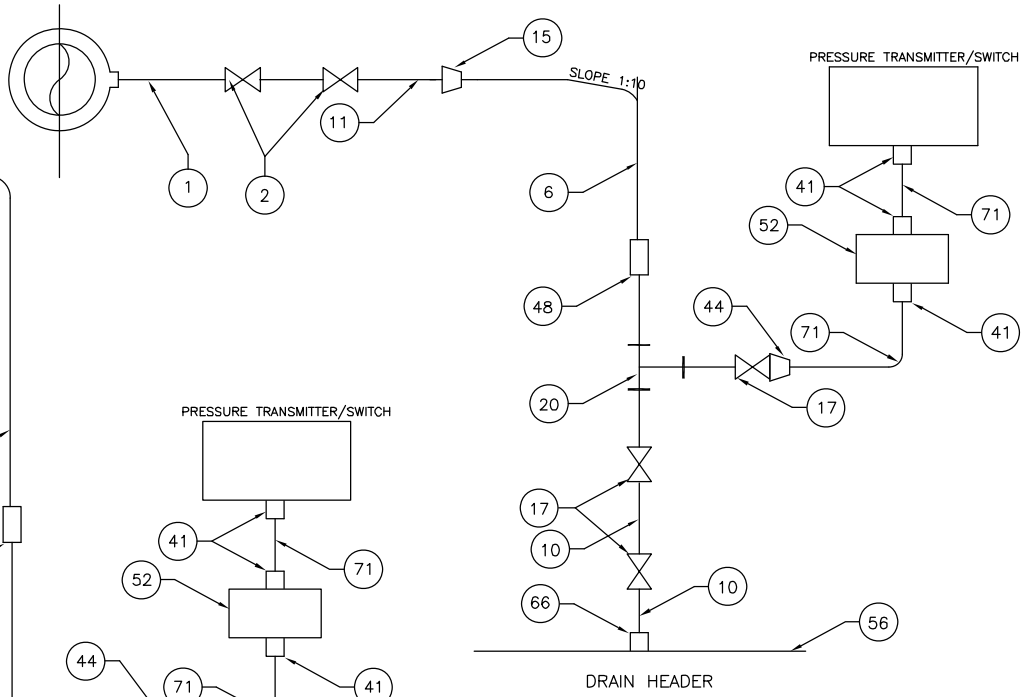

TRANSMITTER MOUNTED BELOW
INSTRUMENT SOURCE POINT

FIG–B

TAG NO.	DESCRIPTION	A	B
		QTY.	
71	1/2"OD IMPULSE TUBE,SS–316	AS REQD.	
66	1/2" GI SOCKET	1	1
56	5/3/2"NB GI DRAIN HEADER		
52	5/3/2–VALVE MANIFOLDS,SS–316	1	1
48	1/2"SW,CS/AS BULK HEAD PIPE UNION	1	1
44	1/2"BW X 1/2"OD COMRESSION TUBE FITTING,SS–316	1	1
41	1/2"NPT(M) X 1/2"OD TUBE COMPRESSION FITTING,SS–316	3	3
20	1/2"SW EQUAL TEE,CS	1	1
17	1/2" SW,CS GLOBE VALVE / NEEDLE VALVE	3	3
15	1" TO 1/2" SW REDUCER	1	1
11	1" NPS SCH–80 CS/AS NIPPLE	1	1
10	1/2" NPS,SCH 80/160, CS/AS NIPPLE	2	2
6	1/2" NPS. SCH–80/160 CS/ AS PIPE	AS REQD.	
2	1/2"/3/4"/1" ROOT VALVE	2	2
1	1/2"/3/4"/1" CARBON/ALLOY STEEL NIPPLE OF MTL. SAME AS THAT OF MAIN PIPE(AS PER PROCESS REQD.)	AS REQD.	

BILL OF MATERIAL

NOTE:–

1. FOR HIGH TEMP. SERVICE (MORE THAN °80C) A 'U'–TUBE / SYPHON (REF. SH–2 OF 19) SHALL BE PROVIDED BETWEEN THE MANIFOLD AND THE TRANSMITTER/SWITCH
2. WITH ROOT VLV. OF SIZE 1/2"SW NIPPLE PIECE AND 1 TO 1/2"SW REDUCER IS NOT REQUIERED
3. FOR HIGH PR.(MORE THAN 40Kg/sqcm) ONE ISOLATING VLV. IS PROVIDED IN EACH LINE BETWEEN VLV. MANIFOLD AND 1/2"SW EQUAL TEE AND 2.NOS DRAIN VLV. ARE ALSO PROVIDED.

PRELIMINARY

PRESS. & DIFF. PRESS. TRANS./SWITCH (STEAM & LIQUID SERVICE)

REVIEWED										
			AC	PB	PB	AAM	PRELIMINARY		0	27.01.15
			APPROVED	REVIEWED	CHECKED	DRAWN	DESCRIPTION	RELEASE STATUS	REV.	DATE

INSTRUMENT INSTALLATION DIAGRAM

PANKI THERMAL POWER STATION
1 x 660 MW UNIT
KANPUR (UP)

UTTAR PRADESH RAJYA VIDYUT UTPADAN NIGAM LIMITED

DEVELOPMENT CONSULTANTS PVT. LTD
CONSULTING ENGINEERS

JOB NO. 14A14 | SCALE : NIL

DWG. NO. 14A14–DWG–I–0010 | SHT. 6 OF 19 | REV. 0

FILE NAME 14A14–DWG–I–0010–R0

A3 (9–96) [420x297]

TAG NO.	DESCRIPTION	C	D
		QTY.	
71	1/2"OD IMPULSE TUBE,SS-316	AS REQD.	
66	1/2" GI SOCKET	1	1
56	2"NB GI DRAIN HEADER		
52	5/3/2-VALVE MANIFOLDS,SS-316	1	1
48	1/2"SW,CS/AS BULK HEAD PIPE UNION	1	1
44	1/2"BW X 1/2"OD COMRESSION TUBE FITTING,SS-316	1	1
41	1/2"NPT(M) X 1/2"OD TUBE COMPRESSION FITTING,SS-316	3	3
20	1/2"SW EQUAL TEE,CS	1	1
17	1/2" SW,CS GLOBE VALVE / NEEDLE VALVE	3	3
15	1" TO 1/2" SW REDUCER	1	1
11	1" NPS SCH-80 CS/AS NIPPLE	1	1
10	1/2" NPS,SCH 80/160, CS/AS NIPPLE	2	2
6	1/2" NPS. SCH-80/160 CS/ AS PIPE	AS REQD.	
2	1/2"/3/4"/1" ROOT VALVE	2	2
1	1/2"/3/4"/1" CARBON/ALLOY STEEL NIPPLE OF MTL. SAME AS THAT OF MAIN PIPE(AS PER PROCESS REQD.)	AS REQD.	

BILL OF MATERIAL

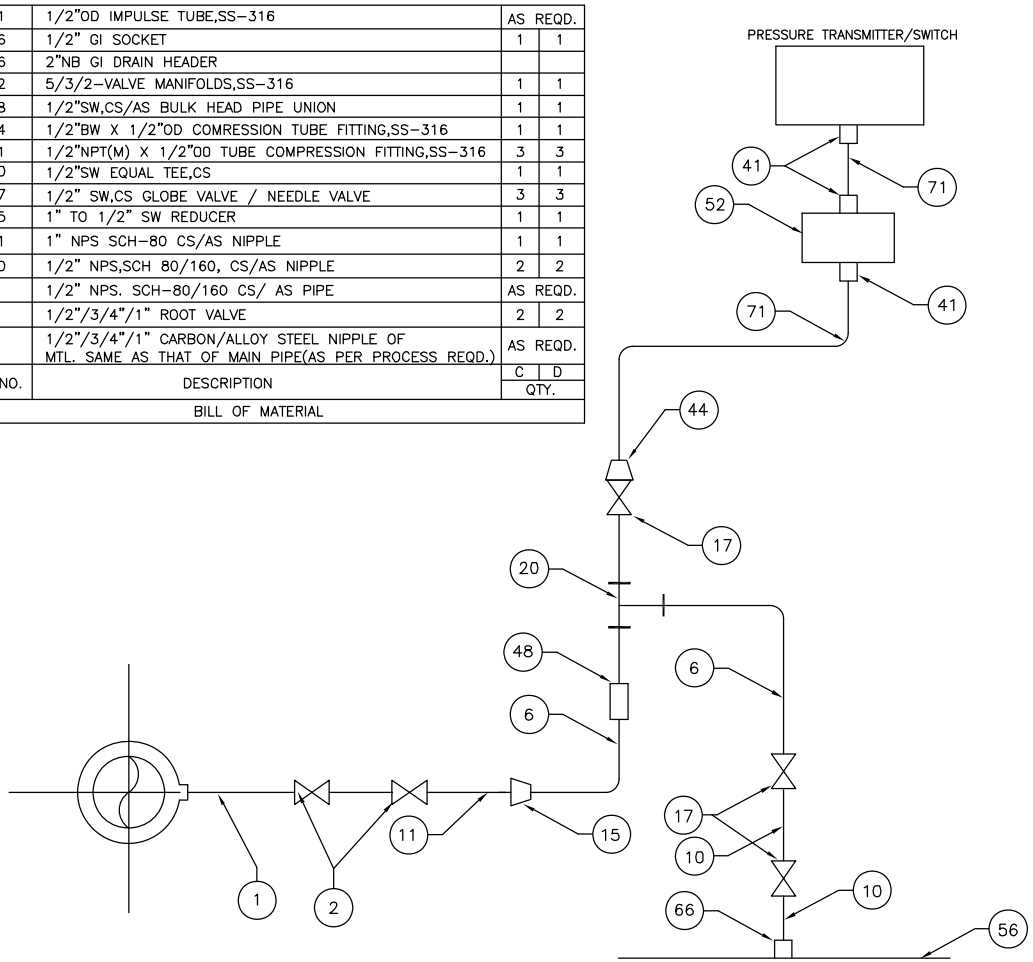

TRANSMITTER MOUNTED ABOVE INSTRUMENT SOURCE POINT

FIG-D

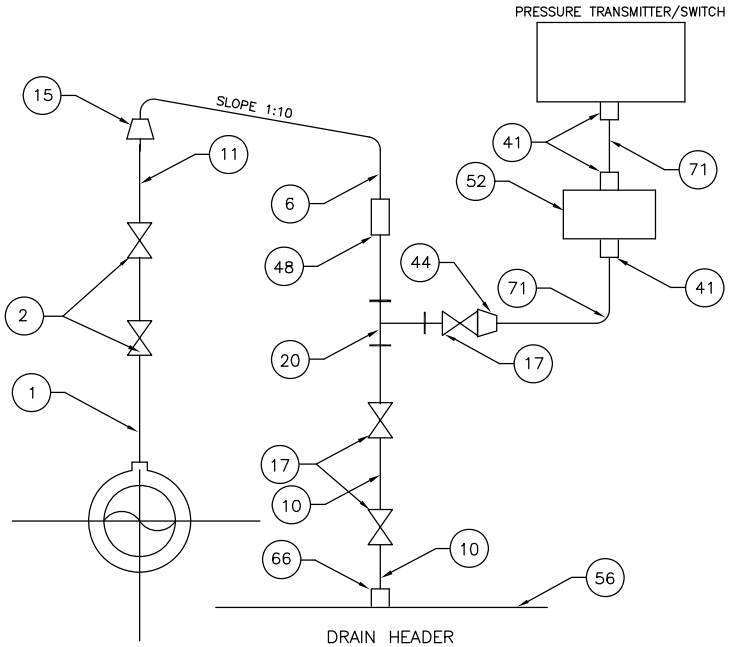

TRANSMITTER MOUNTED ABOVE INSTRUMENT SOURCE POINT

FIG-C

PRESS. & DIFF.PRESS. TRANSMITTERS/SWITCH (STEAM & LIQUID SERVICE)

NOTE:-

1. FOR HIGH TEMP. SERVICE (MORE THAN °80C) A 'U'-TUBE / SYPHON (REF. SH-2 OF 19)SHALL BE PROVIDED BETWEEN THE MANIFOLD AND THE TRANSMITTER/SWITCH
2. WITH ROOT VLV. OF SIZE 1/2"SW NIPPLE PIECE AND 1 TO 1/2"SW REDUCER IS NOT REQUIERED
3. FOR HIGH PR.(MORE THAN 40Kg/sqcm) ONE ISOLATING VLV. IS PROVIDED IN EACH LINE BETWEEN VLV. MANIFOLD AND 1/2"SW EQUAL TEE AND 2.NOS DRAIN VLV. ARE ALSO PROVIDED.

PRELIMINARY

REVIEWED										
			AC	PB	PB	AAM	PRELIMINARY		0	27.01.15
			APPROVED	REVIEWED	CHECKED	DRAWN	DESCRIPTION	RELEASE STATUS	REV.	DATE

INSTRUMENT INSTALLATION DIAGRAM

PANKI THERMAL POWER STATION
1 x 660 MW UNIT
KANPUR (UP)

UTTAR PRADESH RAJYA VIDYUT UTPADAN NIGAM LIMITED

DEVELOPMENT CONSULTANTS PVT. LTD
CONSULTING ENGINEERS

JOB NO. 14A14 | SCALE : NIL

DWG. NO. 14A14-DWG-I-0010 | SHT. 7 OF 19 | REV. 0

FILE NAME 14A14-DWG-I-0010-R0

A3 (9-96) [420x297]

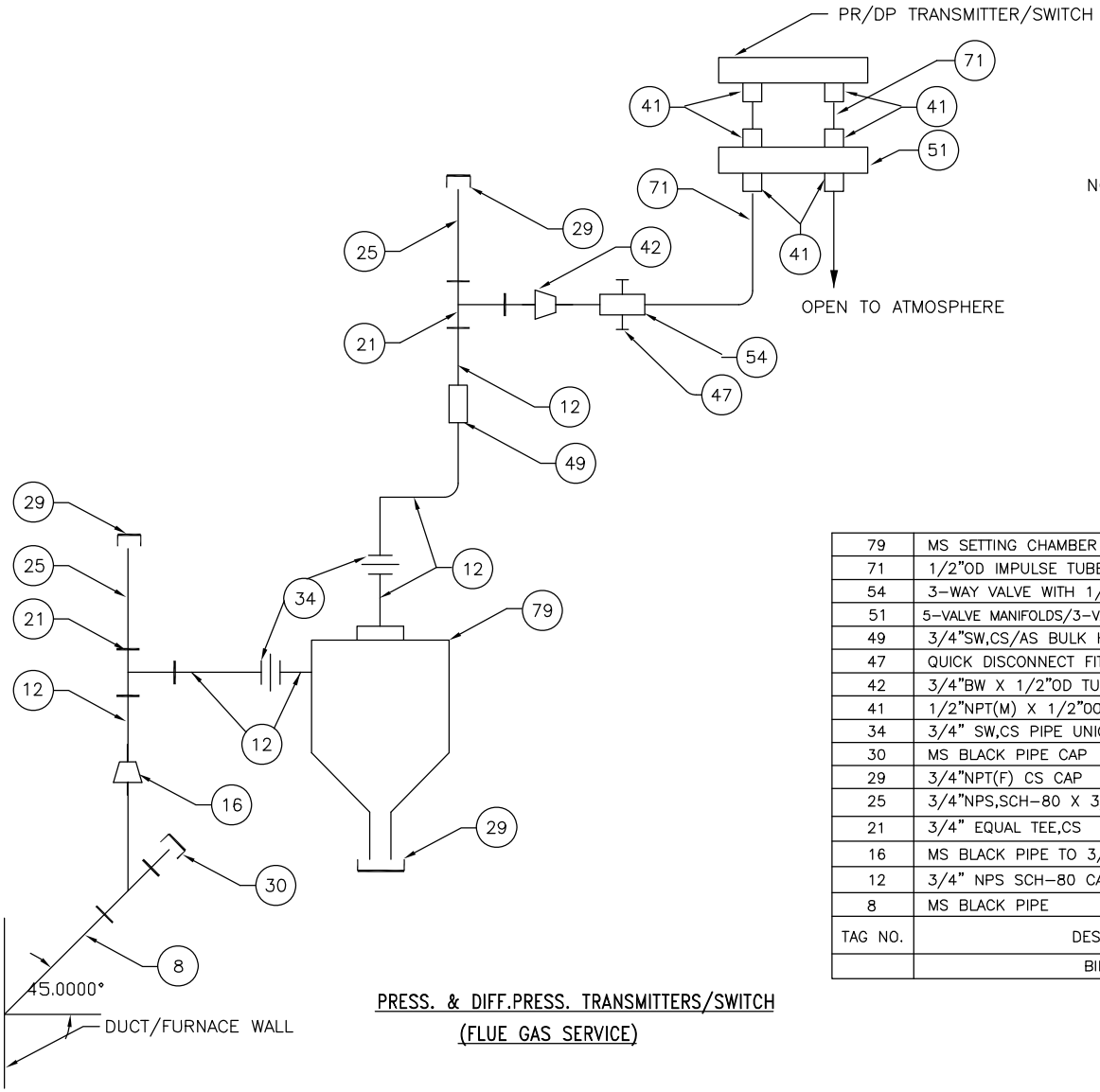

NOTE:–
FOR DP TRANSMITTERTHE SECOND IMPULSE LINE
SHALL BE CONNECTED SIMILARTO FIRST IMPULSE LINE

TAG NO.	DESCRIPTION	QTY.
79	MS SETTING CHAMBER 16" X 10"ø	1
71	1/2"OD IMPULSE TUBE,SS–316	AS REQD.
54	3–WAY VALVE WITH 1/2" SWAGE LOCK CONNECTION	1
51	5–VALVE MANIFOLDS/3–VALVE MANIFOLDS/2–VALVE MANIFOLDS,SS–316	1
49	3/4"SW,CS/AS BULK HEAD PIPE UNION	1
47	QUICK DISCONNECT FITTING,CS	1
42	3/4"BW X 1/2"OD TUBE FITTING,SS–316	1
41	1/2"NPT(M) X 1/2"OD TUBE COMPRESSION FITTING,SS–316	6
34	3/4" SW,CS PIPE UNION	2
30	MS BLACK PIPE CAP	1
29	3/4"NPT(F) CS CAP	3
25	3/4"NPS,SCH–80 X 3/4"NPT(M)CS NIPPLE	2
21	3/4" EQUAL TEE,CS	2
16	MS BLACK PIPE TO 3/4" SW,CS REDUCER	1
12	3/4" NPS SCH–80 CARBON STEEL PIPE	AS REQD.
8	MS BLACK PIPE	AS REQD.
	BILL OF MATERIAL	

PRESS. & DIFF.PRESS. TRANSMITTERS/SWITCH
(FLUE GAS SERVICE)

PRELIMINARY

REVIEWED										
			AC	PB	PB	AAM	PRELIMINARY		0	27.01.15
			APPROVED	REVIEWED	CHECKED	DRAWN	DESCRIPTION	RELEASE STATUS	REV.	DATE

INSTRUMENT INSTALLATION DIAGRAM

PANKI THERMAL POWER STATION
1 x 660 MW UNIT
KANPUR (UP)

UTTAR PRADESH RAJYA VIDYUT UTPADAN NIGAM LIMITED

DEVELOPMENT CONSULTANTS PVT. LTD
CONSULTING ENGINEERS

JOB NO. 14A14 | SCALE : NIL
DWG. NO. 14A14–DWG–I–0010 | SHT. 8 OF 19 | REV. 0

FILE NAME 14A14–DWG–I–0010–R0

A3 (9–96) [420x297]

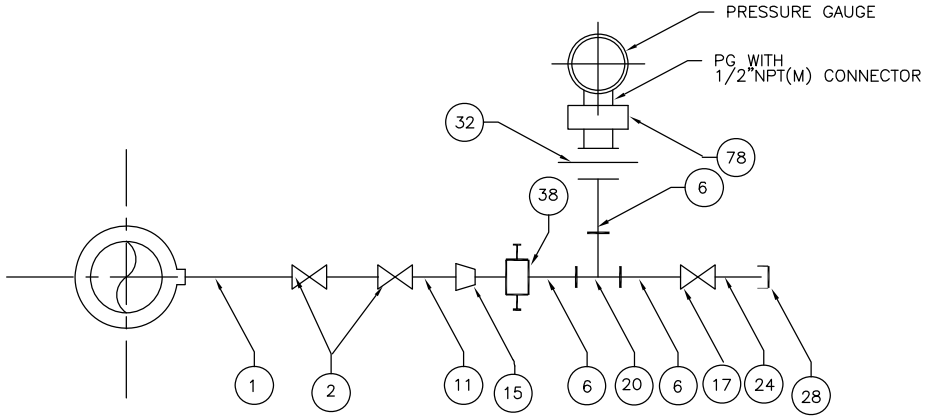

STEAM/LIQUID SERVICE
FIG–A

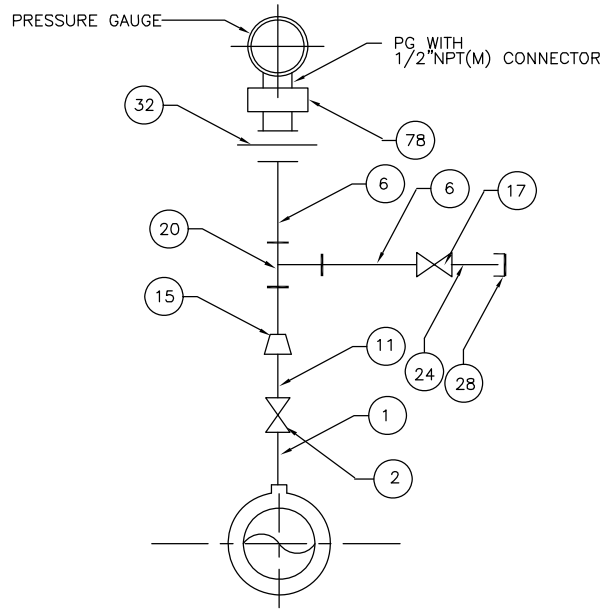

AIR SERVICE
FIG–B

TAG NO.	DESCRIPTION	QTY. A	QTY. B
78	1/2"NPT(F)X1/2"NPT(M) SNUBBER/PULSATION DAMPER	1	1
59	1/2"SW, STRAIGHT PIPE CONNECTOR, CS/AS	–	–
38	3 WAY GAUGE VALVE 1/2" NB SW	1	–
37	6" COILED SYPHON SCH 80/160 1/2"NB CS/SS	–	–
32	1/2"NPS,3PIECE PIPE UNION WITH 1/2"NPT(F) SCREWED	1	1
28	1/2"NPT (F) CS CAP	1	1
24	1/2"NPS,SCH–80/160X1/2"NPT(M)CS/AS NIPPLE	1	1
20	1/2"SW EQUAL TEE, CS/AS	1	1
17	1/2" SW CS/AS GLOBE VALVE	1	1
15	1" TO 1/2" SOCKET WELDED REDUCER	1	1
11	1" NPS SCH–80/160 CS/AS NIPPLE	1	1
6	1/2" NPS. SCH–80/160 CS/ AS PIPE	AS REQD.	
2	1/2"/3/4"/1" ROOT VALVE–SW GLOBE VALVE	2	1
1	1/2"/3/4"/1" CARBON/ALLOY STEEL NIPPLE OF MTL. SAME AS THAT OF MAIN PIPE(AS PER PROCESS REQD.)	AS REQD.	

BILL OF MATERIAL

LOCAL PRESSURE GAUGE

PRELIMINARY

REVIEWED										
			AC	PB	PB	AAM	PRELIMINARY		0	27.01.15
			APPROVED	REVIEWED	CHECKED	DRAWN	DESCRIPTION	RELEASE STATUS	REV.	DATE

INSTRUMENT INSTALLATION DIAGRAM

PANKI THERMAL POWER STATION
1 x 660 MW UNIT
KANPUR (UP)

UTTAR PRADESH RAJYA VIDYUT UTPADAN NIGAM LIMITED

DEVELOPMENT CONSULTANTS PVT. LTD
CONSULTING ENGINEERS

JOB NO. 14A14 | SCALE : NIL
DWG. NO. 14A14–DWG–I–0010 | SHT. 9 OF 19 | REV. 0

FILE NAME 14A14–DWG–I–0010–R0

A3 (9–96) [420x297]

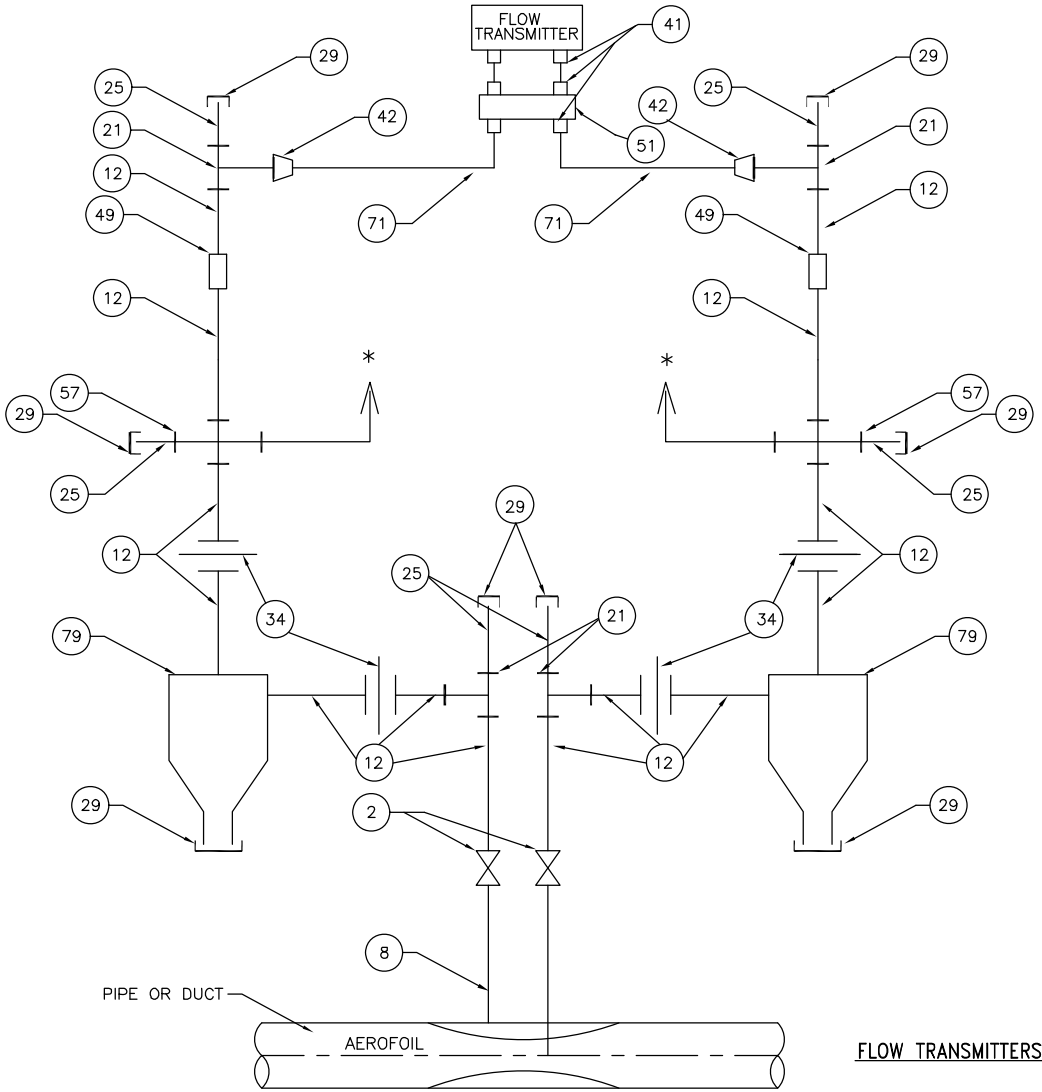

TAG NO.	DESCRIPTION	QTY.
79	MS SETTLING CHAMBER 16" X 10"ø	2
71	1/2"OD IMPULSE TUBE SS-316	AS REQD.
57	3/4"SW EQUAL CROSS, 3000lbs	2
51	5-VALVE MANIFOLDS	1
49	3/4"SW CS/AS BULK HEAD PIPE UNION	2
42	3/4"BW X 1/2"OD TUBE FITTING, SS-316	2
41	1/2" NPT (M) X 1/2"OD TUBE COMPRESSION FITTING,SS-316	6
34	3/4" SW,CS PIPE UNION	4
29	3/4" NPT (F) CS,CAP	8
25	3/4" NPS SCH-80 X 3/4" NPT (M) CS NIPPLE	6
21	3/4" SOCKET WELDED EQUAL TEE CS	4
12	3/4" NPS 80 CARBON STEEL PIPE	AS REQD.
2	1/2"/3/4"/1" ROOT VALVE-SW GLOBE VALVE	2
8	MS BLACK PIPE	AS REQD.

NOTE:-

* TO BULK HEAD UNION OF FLOW TRANSMITTER NO. II

FLOW TRANSMITTERS (AIR SERVICE)

PRELIMINARY

REVIEWED										
			AC	PB	PB	AAM	PRELIMINARY		0	27.01.15
			APPROVED	REVIEWED	CHECKED	DRAWN	DESCRIPTION	RELEASE STATUS	REV.	DATE

INSTRUMENT INSTALLATION DIAGRAM

PANKI THERMAL POWER STATION
1 x 660 MW UNIT
KANPUR (UP)

UTTAR PRADESH RAJYA VIDYUT UTPADAN NIGAM LIMITED

DEVELOPMENT CONSULTANTS PVT. LTD
CONSULTING ENGINEERS

JOB NO. 14A14 | SCALE : NIL

DWG. NO. 14A14-DWG-I-0010 | SHT. 10 OF 19 | REV. 0

FILE NAME 14A14-DWG-I-0010-R0

A3 (9-96) [420x297]

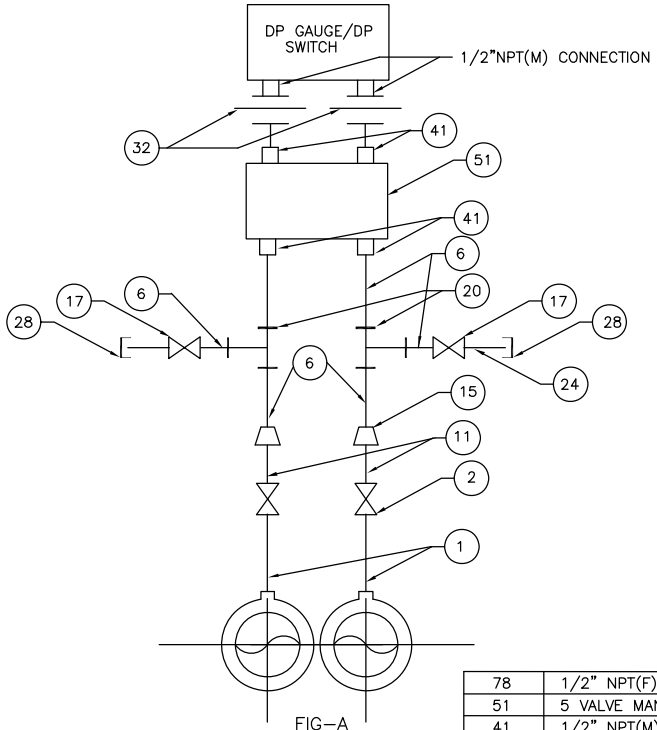

FIG–A

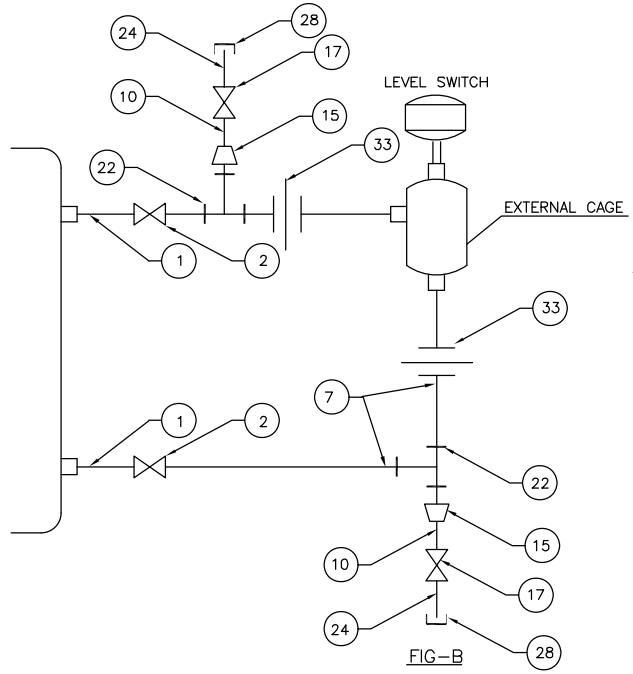

FIG–B

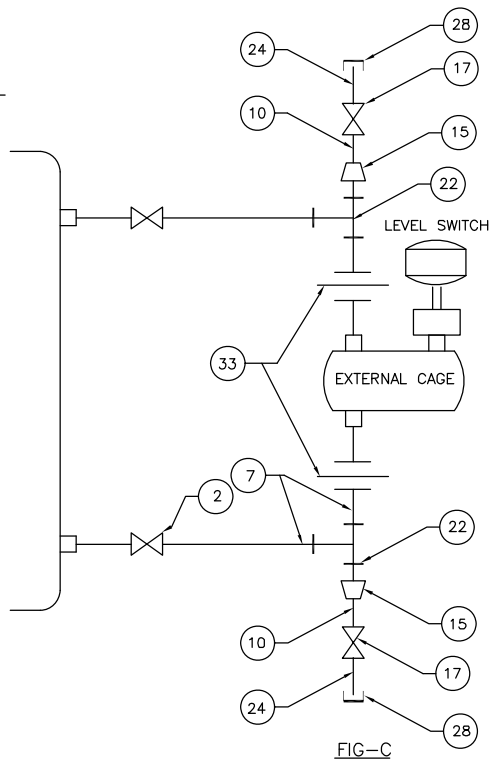

FIG–C

DIFF. PRESS. SWITCH/GAUGE/LEVEL SWITCHES

TAG NO.	DESCRIPTION	A	B	C
		QTY.		
78	1/2" NPT(F) X 1/2" NPT(M) SNUBBER/PULSATION DAMPNER	1	–	–
51	5 VALVE MANIFOLDS, SS–316	–	–	–
41	1/2" NPT(M) X 1/2" OD TUBE COMPRESSION FITTING,SS–316	–	–	–
38	3 WAY GAUGE VALVE 1/2"NB SW	1	–	–
33	1" SW EQUAL PIPE UNION	–	2	2
32	1/2" NPS,3 PIECE PIPE UNION 1/2" NPT(F) SCREWED AND 1/2" SW CONNECTION	1	–	–
28	1/2" NPT(F) CS. CAP	1	2	2
24	1/2" NPS,SCH 80/160 X 1/2" NPT(M) CS/AS NIPPLE	1	2	2
22	1" SW EQUAL TEE CS/AS	–	1	2
20	1/2"SW EQUAL TEE CS/AS	1	–	–
17	1/2" SW,CS/AS, GLOBE VALVE	1	2	2
15	1" TO 1/2" SOCKET WELD REDUCER	1	2	2
11	1"NPS SCH 80/160 CS/AS NIPPLE	1	–	–
10	1/2"NPS,SCH 80/160 CA/AS NIPPLE	–	2	2
6	1/2"NPS,SCH 80/160 CARBON/ALLOY STEEL PIPE	AS REQD.		
7	1" NPS,SCH 80/160 CS/AS STEEL PIPE	AS REQD.		
2	1/2"3/4"/1" ROOT VALVE – SW GLOBE VALVE	2	2	2
1	1/2"/3/4"/1" CARBON/ALLOY STEEL NIPPLE OF MTL SAME AS THAT OF MAIN PIPE (AS PER PROCESS REQD.)	AS REQD.		

NOTE:–

WITH VALVE OF SIZE 1/2"SW NIPPLE PIECE IS NOT REQUIERED

PRELIMINARY

REVIEWED										
			AC	PB	PB	AAM	PRELIMINARY		0	27.01.15
			APPROVED	REVIEWED	CHECKED	DRAWN	DESCRIPTION	RELEASE STATUS	REV.	DATE

INSTRUMENT INSTALLATION DIAGRAM

PANKI THERMAL POWER STATION
1 x 660 MW UNIT
KANPUR (UP)

UTTAR PRADESH RAJYA VIDYUT UTPADAN NIGAM LIMITED

DEVELOPMENT CONSULTANTS PVT. LTD
CONSULTING ENGINEERS

JOB NO. 14A14 | SCALE : NIL

DWG. NO. 14A14–DWG–I–0010 | SHT. 11 OF 19 | REV. 0

FILE NAME 14A14–DWG–I–0010–R0

A3 (9–96) [420x297]

NOTE:–
1. FOR HIGH TEMP. SERVICE (MORE THAN 80°C) A 'U' TUBE(REF. SH–2 OF 19) SHALL BE PROVIDED BETWEEN THE MANIFOLD AND THE TRANSMITTER
2. FOR HIGH PR.(MORE THAN 40kg/sqcm) ONE NO. OF ISOLATING VLV. IS PROVIDED IN EACH LINE BETWEEN VLV. MANIFOLD AND 1/2"SW EQUAL TEE AND 2NO. DRAIN VLV. ARE ALSO PROVIDED

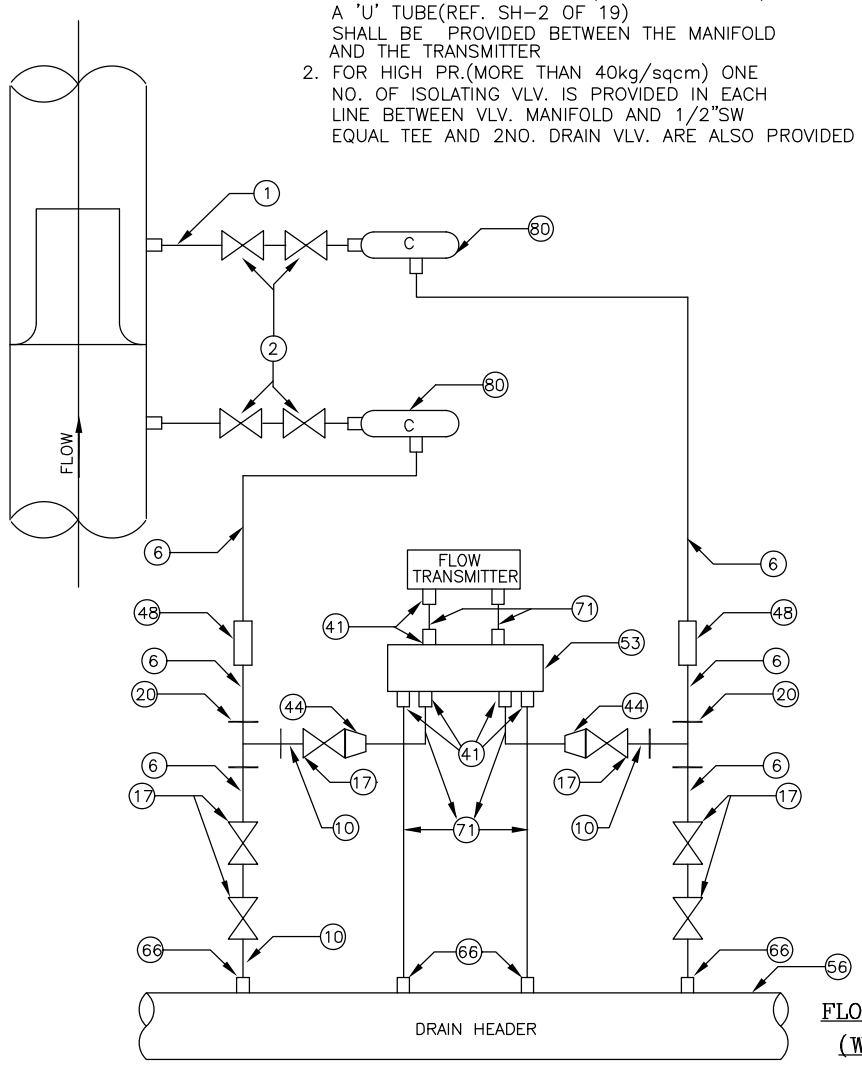

HORIZONTAL PIPE RUN (FIG–A)

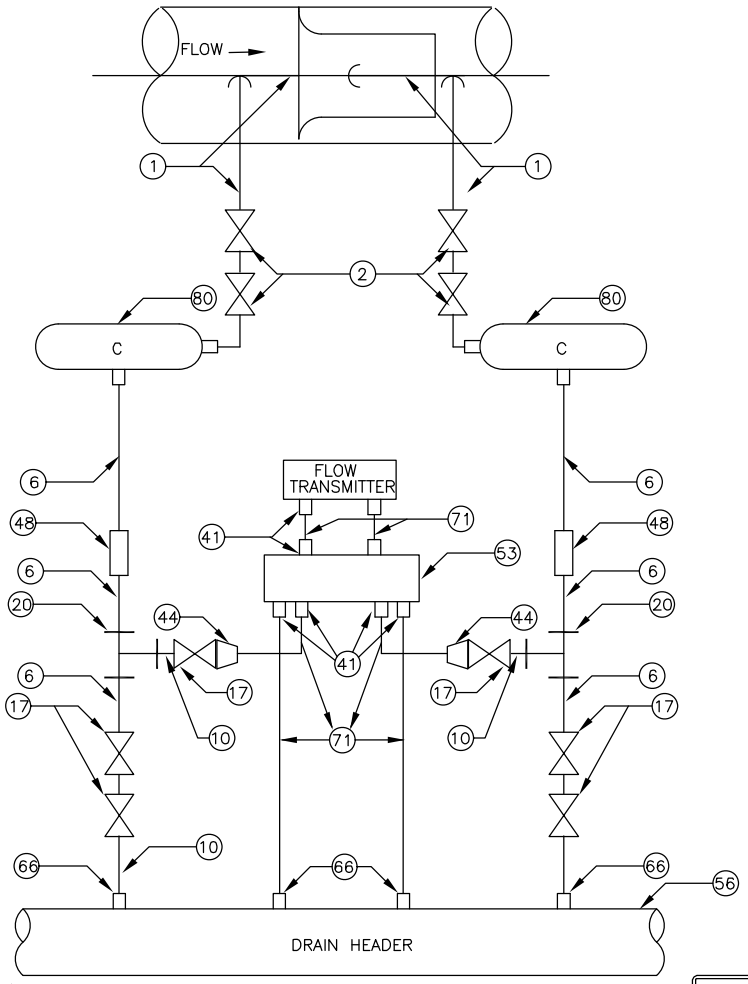

VERTICAL PIPE RUN (FIG–B)

FLOW TRANS. (WATER & STEAM SERVICE)

PRELIMINARY

REVIEWED										
			AC	PB	PB	AAM	PRELIMINARY		0	27.01.15
			APPROVED	REVIEWED	CHECKED	DRAWN	DESCRIPTION	RELEASE STATUS	REV.	DATE

INSTRUMENT INSTALLATION DIAGRAM

PANKI THERMAL POWER STATION
1 x 660 MW UNIT
KANPUR (UP)

UTTAR PRADESH RAJYA VIDYUT UTPADAN NIGAM LIMITED

DEVELOPMENT CONSULTANTS PVT. LTD
CONSULTING ENGINEERS

JOB NO. 14A14 | SCALE : NIL

DWG. NO. 14A14–DWG–I–0010 | SHT. 12A OF 19 | REV. 0

FILE NAME 14A14–DWG–I–0010–R0

A3 (9–96) [420x297]

BILL OF MATERIAL
FOR FLOW TRANS.(WATER & STEAM SERVICE)

TAG NO.	DESCRIPTION	A	B
80	CONDENSATION CHAMBER	2	2
71	1/2"OD IMPULSE TUBE, SS-316	AS REQD.	
66	1/2" GI SOCKET / FUNNEL	4	4
56	2"NB GI DRAIN HEADER	AS REQD.	
53	5-VALVE MANIFOLD, SS-316	1	1
48	1/2" SW, CS/AS BULK HEAD PIPE UNION	2	2
44	1/2"BWX1/2"OD COMPRESSION TUBE FITTING,SS-316	2	2
41	1/2"NPT(M)X1/2"OD TUBE COMPRESSION FITTING,SS-316	8	8
10	1/2" NPS SCH 80/160,CS/AS NIPPLE	4	4
20	1/2" SOCKET WELDED EQUAL TEE CS/AS	2	2
17	1/2" SOCKET WELDED CS GLOBE VALVE	6	6
6	1/2" NPS SCH 80/160 CS/AS PIPE	AS REQD.	
2	1/2" SOCKET WELDED GLOBE VALVE	4	4
1	1/2" NPS SCH 80 NIPPLES OF MATERIAL SAME AS MAIN PIPE WITH NECESSARY ATTACH TO FLANGES	AS REQD.	

PRELIMINARY

REVIEWED										
			AC	PB	PB	AAM	PRELIMINARY		0	27.01.15
			APPROVED	REVIEWED	CHECKED	DRAWN	DESCRIPTION	RELEASE STATUS	REV.	DATE

INSTRUMENT INSTALLATION DIAGRAM

PANKI THERMAL POWER STATION
1 x 660 MW UNIT
KANPUR (UP)

UTTAR PRADESH RAJYA VIDYUT UTPADAN NIGAM LIMITED

DEVELOPMENT CONSULTANTS PVT. LTD
CONSULTING ENGINEERS

JOB NO. 14A14 | SCALE : NIL

DWG. NO. 14A14-DWG-I-0010 | SHT. 12 OF 19 | REV. 0

FILE NAME 14A14-DWG-I-0010-R0

A3 (9-96) [420x297]

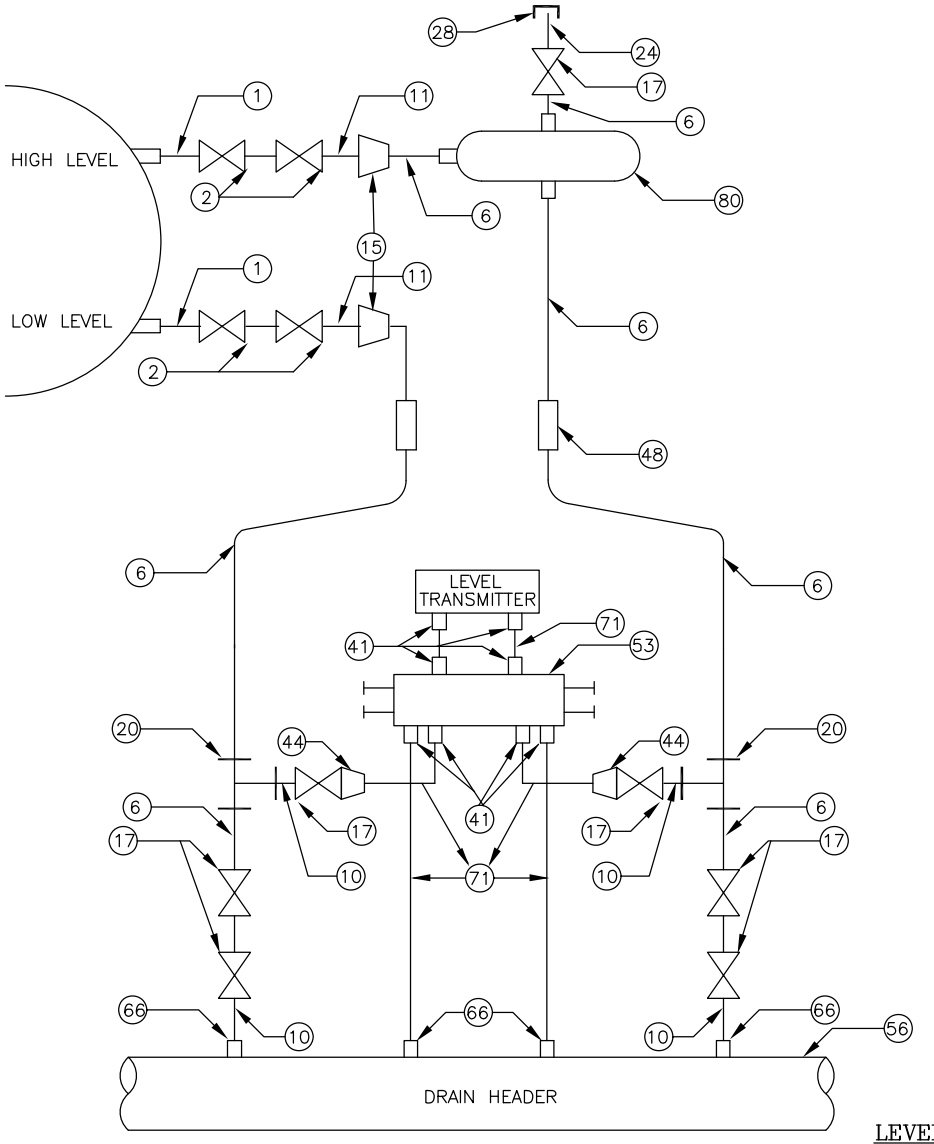

TRANSMITTER MOUNTED BELOW INST. SOURCE POINT

TAG NO.	DESCRIPTION	BOM
80	CONDENSATION CHAMBER	1
71	1/2"OD IMPULSE TUBE, SS-316	AS REQD.
66	1/2" GI SOCKET / FUNNEL	4
56	2"NB GI DRAIN HEADER	AS REQD.
53	5-VALVE MANIFOLD, SS-316	1
48	1/2" SW, CS/AS BULK HEAD PIPE UNION	2
44	1/2"BWX1/2"OD COMPRESSION TUBE FITTING,SS-316	2
41	1/2"NPT(M)X1/2"OD TUBE COMPRESSION FITTING,SS-316	8
28	1/2" NPT (F) CS CAP	1
24	1/2" NPS SCH-80/160X1/2"NPT(M) CS/AS NIPPLE	1
20	1/2" SOCKET WELDED EQUAL TEE CS/AS	2
17	1/2" SOCKET WELDED CS GLOBE VALVE	7
15	1"TO 1/2" SOCKET WELD REDUCER	2
11	1" NPS SCH 80/160 CS/AS NIPPLE	2
10	1/2" NPS SCH 80/160,CS/AS NIPPLE	4
6	1/2" NPS SCH 80/160 CS/AS PIPE	AS REQD.
2	1/2"/3/4"/1" SOCKET WELDED GLOBE VLV/ROOT VLV.	4
1	1/2" NPS SCH 80 NIPPLES OF MATERIAL SAME AS MAIN PIPE WITH NECESSARY ATTACH TO FLANGES	AS REQD.

NOTE:-

1. FOR HIGH TEMP. SERVICE (MORE THAN 80°C) A 'U' TUBE(REF. SH-2 OF 19) SHALL BE PROVIDED BETWEEN THE MANIFOLD AND THE TRANSMITTER
2. FOR HIGH PR.(MORE THAN 40kg/sqcm) ONE NO. OF ISOLATING VLV. IS PROVIDED IN EACH LINE BETWEEN VLV. MANIFOLD AND 1/2"SW EQUAL TEE AND 2NO. DRAIN VLV. ARE ALSO

LEVEL TRANSMITTERS

PRELIMINARY

REVIEWED										
			AC	PB	PB	AAM	PRELIMINARY		0	27.01.15
			APPROVED	REVIEWED	CHECKED	DRAWN	DESCRIPTION	RELEASE STATUS	REV.	DATE

INSTRUMENT INSTALLATION DIAGRAM

PANKI THERMAL POWER STATION
1 x 660 MW UNIT
KANPUR (UP)

UTTAR PRADESH RAJYA VIDYUT UTPADAN NIGAM LIMITED

DEVELOPMENT CONSULTANTS PVT. LTD
CONSULTING ENGINEERS

JOB NO. 14A14 | SCALE : NIL

DWG. NO. 14A14-DWG-I-0010 | SHT. 13 OF 19 | REV. 0

FILE NAME 14A14-DWG-I-0010-R0

A3 (9-96) [420x297]

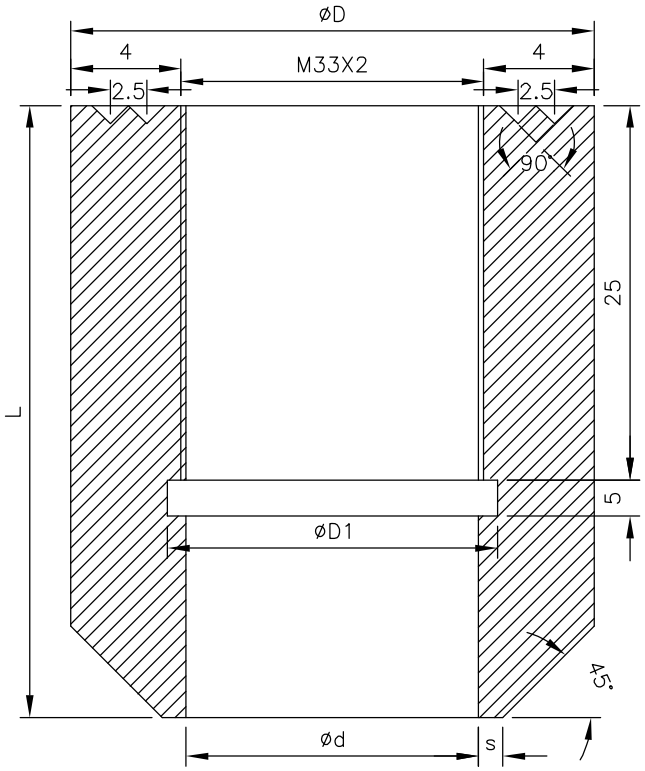

TEMPERATURE STUB FOR STRAIGHT IMMERSION

FOR PIPE OD BELOW 219.1mm	29	55	33.5	1.5	65
FOR PIPE OD 219.1mm & ABOVE	29	55	33.5	1.5	45
MAIN PIPE SIZES	d	D	D1	S	L

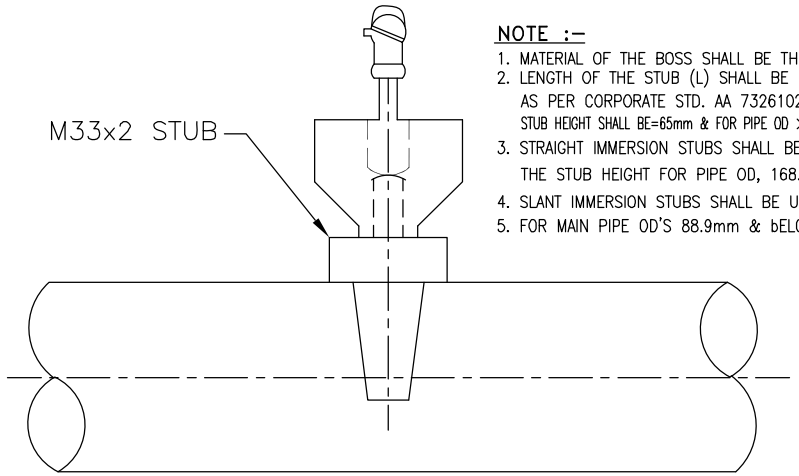

INSTALLATION TYPE-1

(FOR MAIN PIPE OD 168.3mm & ABOVE)

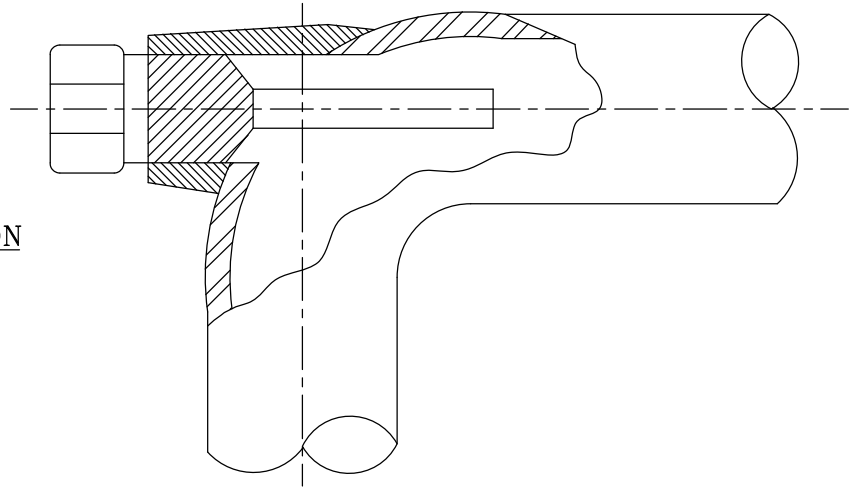

INSTALLATION TYPE-2

(FOR MAIN PIPE OD 88.9mm & BELOW)

NOTE :-

1. MATERIAL OF THE BOSS SHALL BE THE SAME AS THE PIPE INTO WHICH IT IS WELDED.
2. LENGTH OF THE STUB (L) SHALL BE 65/45 mm DEPENDING UPON PIPE SIZE, AS PER CORPORATE STD. AA 7326102.(FOR PIPE OD 88.9mm TO 159mm STUB HEIGHT SHALL BE=65mm & FOR PIPE OD >219.1mm STUB HEIGHT SHALL BE=45mm)
3. STRAIGHT IMMERSION STUBS SHALL BE USED FOR PIPE OD'S 168.3mm & ABOVE. THE STUB HEIGHT FOR PIPE OD, 168.3mm TO <219.1mm SHALL BE 65mm.
4. SLANT IMMERSION STUBS SHALL BE USED FOR PIPE OD'S 88.9mm TO 159mm.
5. FOR MAIN PIPE OD'S 88.9mm & bELOW SUITABLE EXPANDER SHALL BE USED.

PRELIMINARY

REVIEWED										
			AC	PB	PB	AAM	PRELIMINARY		0	27.01.15
			APPROVED	REVIEWED	CHECKED	DRAWN	DESCRIPTION	RELEASE STATUS	REV.	DATE

INSTRUMENT INSTALLATION DIAGRAM

PANKI THERMAL POWER STATION
1 x 660 MW UNIT
KANPUR (UP)

UTTAR PRADESH RAJYA VIDYUT UTPADAN NIGAM LIMITED

DEVELOPMENT CONSULTANTS PVT. LTD
CONSULTING ENGINEERS

JOB NO. 14A14 | SCALE : NIL

DWG. NO. 14A14-DWG-I-0010 | SHT. 14 OF 19 | REV. 0

FILE NAME 14A14-DWG-I-0010-R0

A3 (9-96) [420x297]

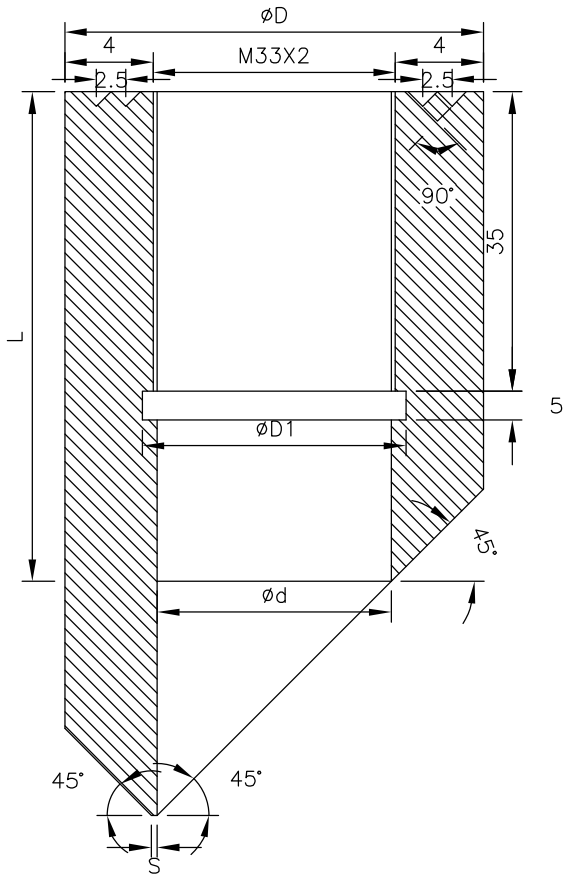

TEMPERATURE STUB FOR SLANT IMMERSION

NOTE :-

1. MATERIAL OF THE BOSS SHALL BE THE SAME AS THE PIPE INTO WHICH IT IS WELDED.
2. LENGTH OF THE STUB (L) SHALL BE 65/45 mm DEPENDING UPON PIPE SIZE, AS PER CORPORATE STD. AA 7326102.(FOR PIPE OD 88.9mm TO 159mm STUB HEIGHT SHALL BE=65mm & FOR PIPE OD >219.1mm STUB HEIGHT SHALL BE=45mm)
3. STRAIGHT IMMERSION STUBS SHALL BE USED FOR PIPE OD'S 168.3mm & ABOVE. THE STUB HEIGHT FOR PIPE OD, 168.3mm TO <219.1mm SHALL BE 65mm.
4. SLANT IMMERSION STUBS SHALL BE USED FOR PIPE OD'S 88.9mm TO 159mm.
5. FOR MAIN PIPE OD'S 88.9mm & bELOW SUITABLE EXPANDER SHALL BE USED.

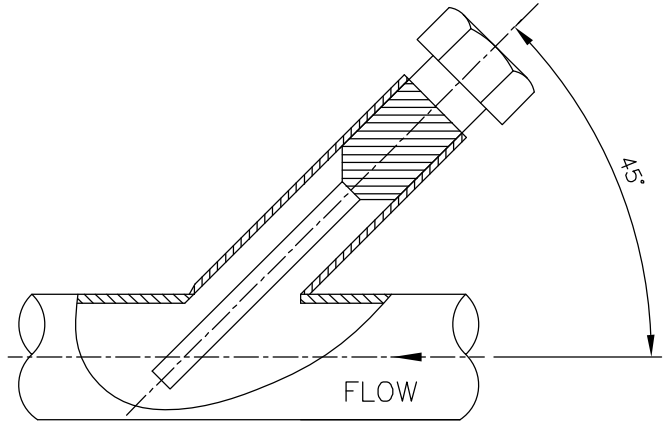

INSTALLATION TYPE-3

(FOR MAIN PIPE OD 88.9mm TO 159mm)

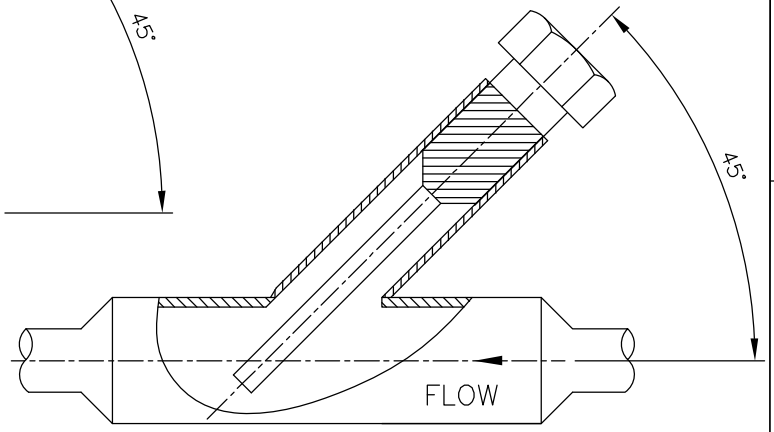

INSTALLATION TYPE-4

(FOR MAIN PIPE OD 88.9mm & BELOW)

FOR PIPE OD BELOW 219.1mm	29	55	33.5	1.5	65
FOR PIPE OD 219.1mm & ABOVE	29	55	33.5	1.5	45
MAIN PIPE SIZES	d	D	D1	S	L

PRELIMINARY

REVIEWED										
			AC	PB	PB	AAM	PRELIMINARY		0	27.01.15
			APPROVED	REVIEWED	CHECKED	DRAWN	DESCRIPTION	RELEASE STATUS	REV.	DATE

INSTRUMENT INSTALLATION DIAGRAM

PANKI THERMAL POWER STATION
1 x 660 MW UNIT
KANPUR (UP)

UTTAR PRADESH RAJYA VIDYUT UTPADAN NIGAM LIMITED

DEVELOPMENT CONSULTANTS PVT. LTD
CONSULTING ENGINEERS

JOB NO. 14A14 | SCALE : NIL

DWG. NO. 14A14-DWG-I-0010 | SHT. 15 OF 19 | REV. 0

FILE NAME 14A14-DWG-I-0010-R0

A3 (9-96) [420x297]

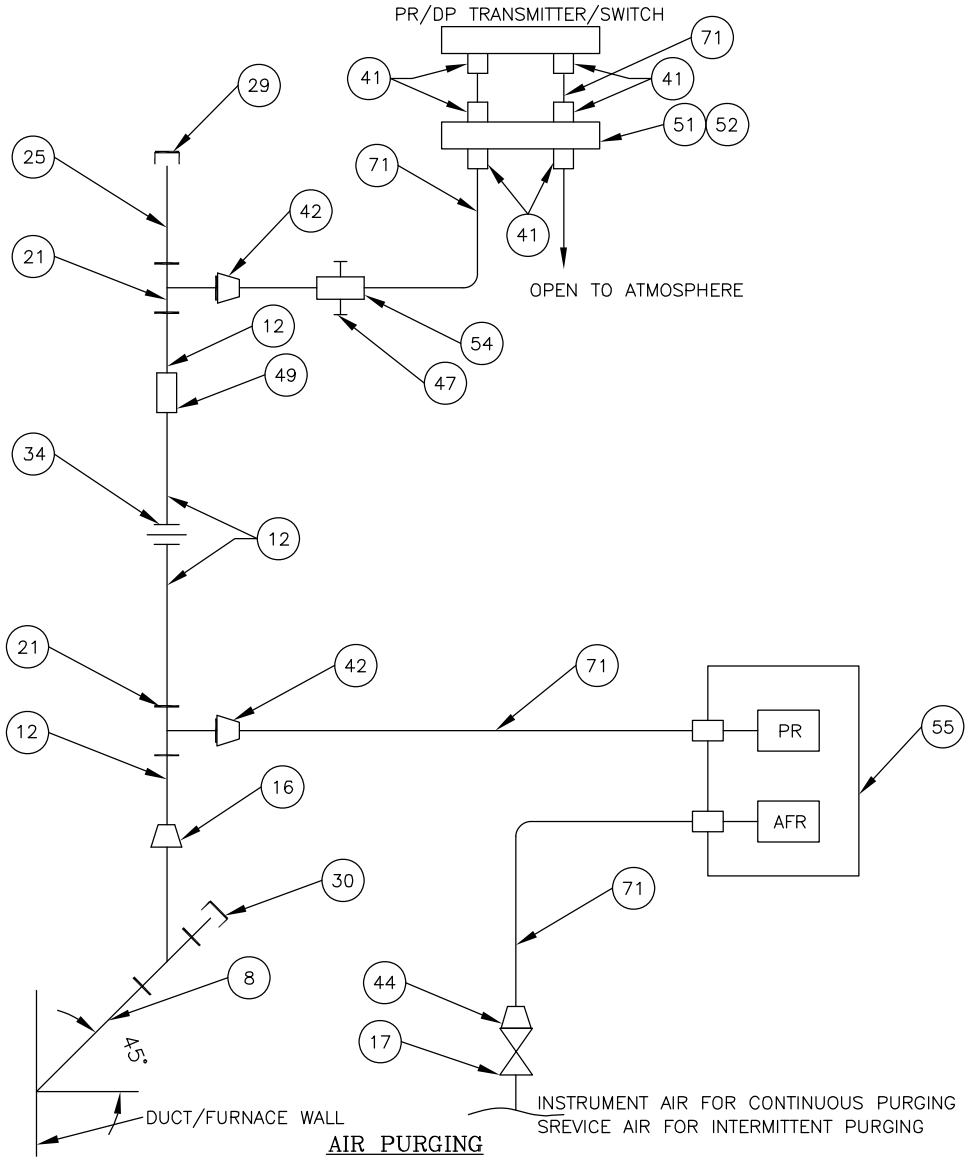

AIR PURGING

TAG NO.	DESCRIPTION	QTY.
71	1/2"OD IMPULSE TUBE,SS-316	
55	CONTINOUS PURGING ARRENGEMENT	1
54	3-WAY VALVE WITH 1/2" SWAGE LOCK CONNECTION	1
51or52	5-VALVE MANIFOLDS/3-VALVE MANIFOLDS/2-VALVE MANIFOLDS,SS-316	1
49	3/4"SW,CS/AS BULK HEAD PIPE UNION	1
47	QUICK DISCONNECT FITTING,CS	1
44	1/2"BW X 1/2"OD TUBE FITTING,SS-316	1
42	3/4"BW X 1/2"OD TUBE FITTING,SS-316	1
41	1/2"NPT(M) X 1/2"OD TUBE COMPRESSION FITTING,SS-316	6
34	3/4" SW,CS PIPE UNION	1
30	MS BLACK PIPE CAP	1
29	3/4"NPT(F) CS CAP	1
25	3/4"NPS,SCH-80 X 3/4"NPT(M)CS NIPPLE	2
21	3/4" EQUAL TEE,CS	2
17	1/2" SW GLOBLE VALVE, CS	1
16	MS BLACK PIPE TO 3/4" SW,CS REDUCER	1
12	3/4" NPS SCH-80 CARBON STEEL PIPE	AS REQD.
8	MS BLACK PIPE	AS REQD.

BILL OF MATERIAL

NOTE:-

FOR DP TRANSMITTER THE SECOND IMPULSE LINE SHALL BE CONNECTED SIMILAR TO FIRST IMPULSE LINE (TAG NO-12)

AFR- AIR FILTER REGULATOR

PR- PURGE ROTAMETER

PRELIMINARY

REVIEWED										
			AC	PB	PB	AAM	PRELIMINARY		0	27.01.15
			APPROVED	REVIEWED	CHECKED	DRAWN	DESCRIPTION	RELEASE STATUS	REV.	DATE

INSTRUMENT INSTALLATION DIAGRAM

PANKI THERMAL POWER STATION
1 x 660 MW UNIT
KANPUR (UP)

UTTAR PRADESH RAJYA VIDYUT UTPADAN NIGAM LIMITED

DEVELOPMENT CONSULTANTS PVT. LTD
CONSULTING ENGINEERS

JOB NO. 14A14 | SCALE : NIL

DWG. NO. 14A14-DWG-I-0010 | SHT. 16 OF 19 | REV. 0

FILE NAME 14A14-DWG-I-0010-R0

A3 (9-96) [420x297]

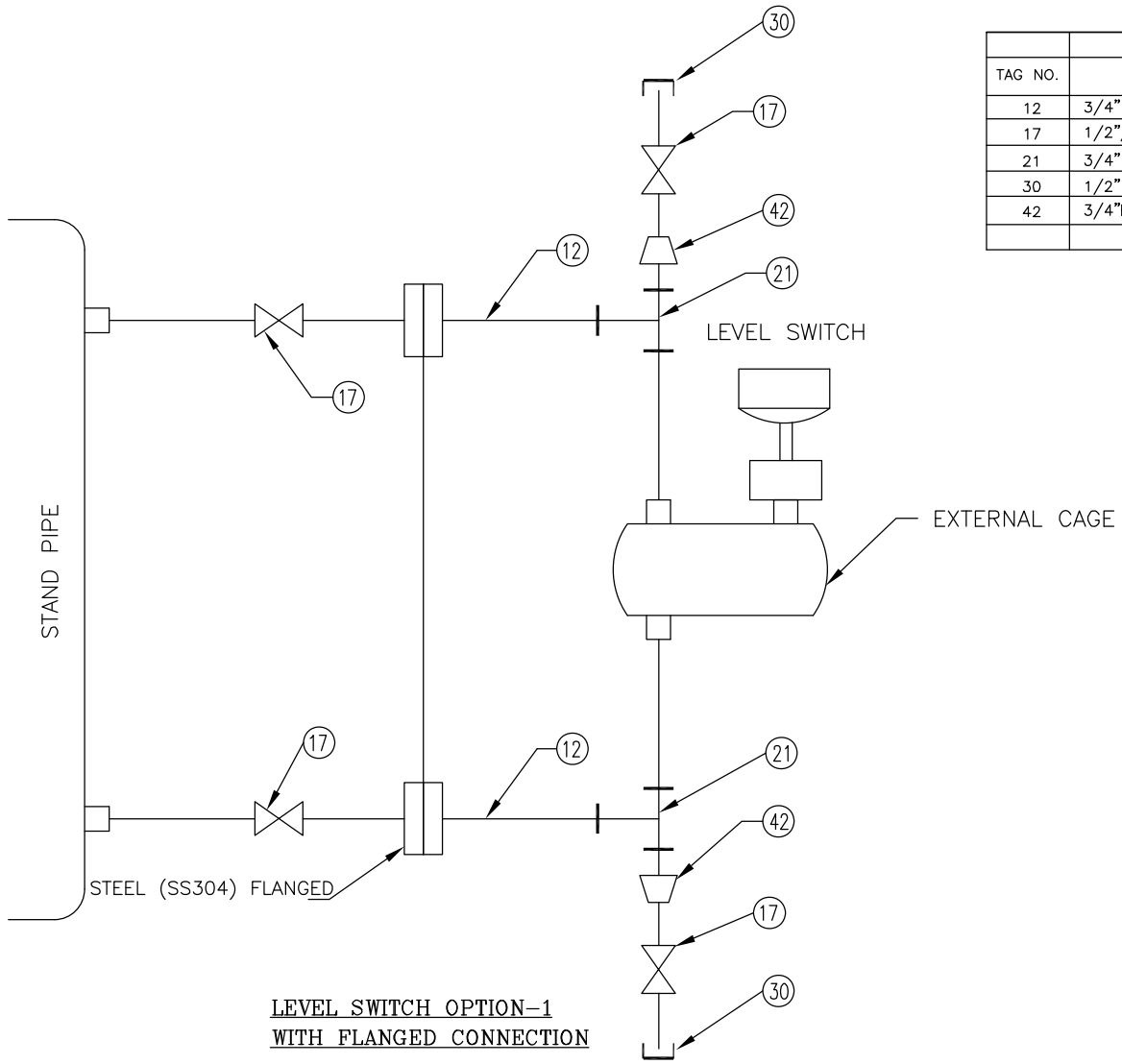

LEVEL SWITCH OPTION-1
WITH FLANGED CONNECTION

	BILL OF MATERIAL	
TAG NO.	DESCRIPTION	QTY.
12	3/4" NPS SCH-80 CARBON STEEL PIPE	AS REQD.
17	1/2"/3/4"/1" SOCKET WELDED GLOBE VLV/ROOT VLV.	4
21	3/4" EQUAL TEE,CS	2
30	1/2" NPT (F) CS CAP	2
42	3/4"BW X 1/2"OD TUBE FITTING,SS-316	2

PRELIMINARY

REVIEWED										
			AC	PB	PB	AAM	PRELIMINARY		0	27.01.15
			APPROVED	REVIEWED	CHECKED	DRAWN	DESCRIPTION	RELEASE STATUS	REV.	DATE

INSTRUMENT INSTALLATION DIAGRAM

PANKI THERMAL POWER STATION
1 x 660 MW UNIT
KANPUR (UP)

UTTAR PRADESH RAJYA VIDYUT UTPADAN NIGAM LIMITED

DEVELOPMENT CONSULTANTS PVT. LTD
CONSULTING ENGINEERS

JOB NO. 14A14 | SCALE : NIL
DWG. NO. 14A14-DWG-I-0010 | SHT. 17 OF 19 | REV. 0

FILE NAME 14A14-DWG-I-0010-R0

A3 (9-96) [420x297]

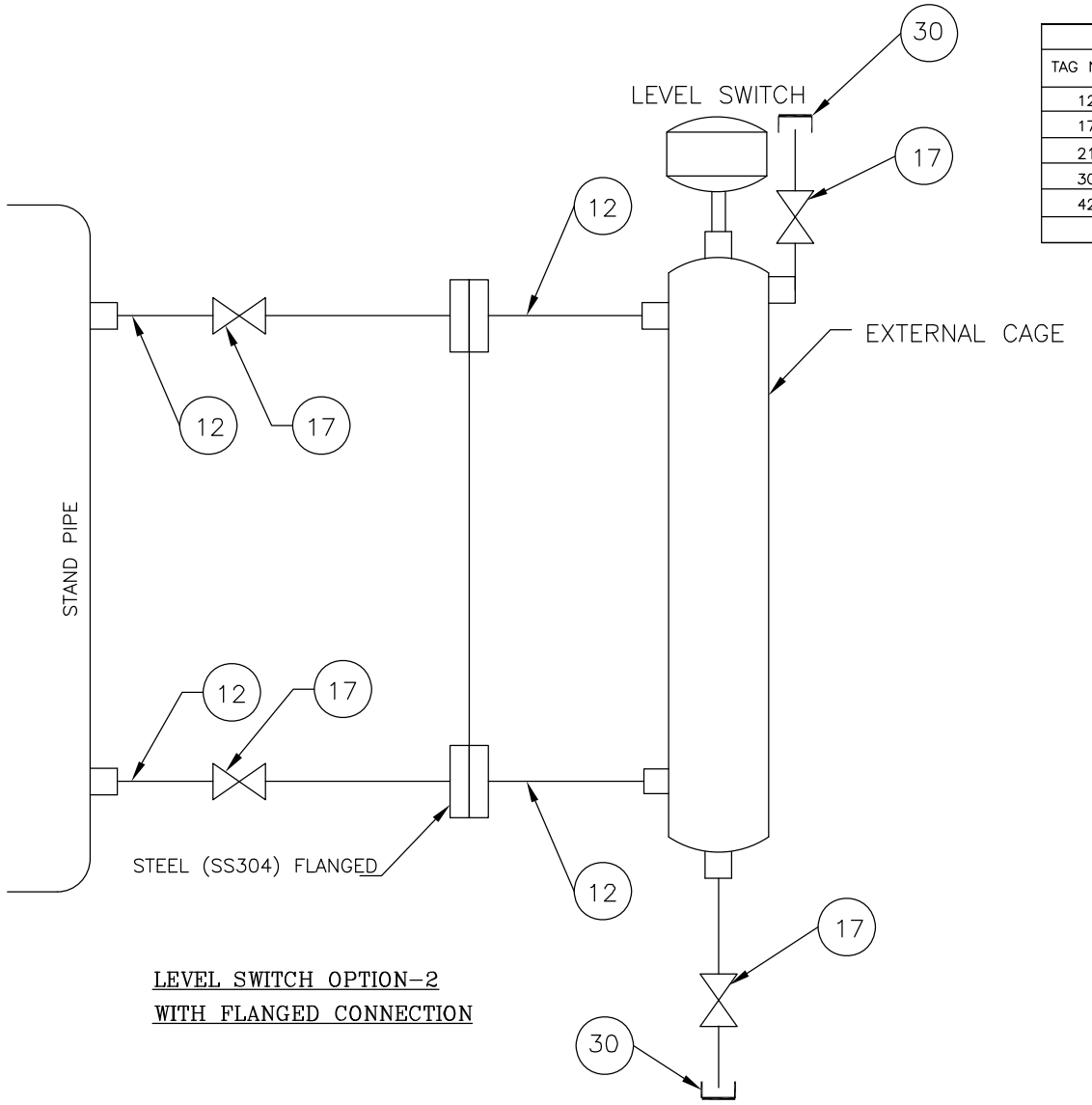

LEVEL SWITCH OPTION-2
WITH FLANGED CONNECTION

	BILL OF MATERIAL	
TAG NO.	DESCRIPTION	QTY.
12	3/4" NPS SCH-80 CARBON STEEL PIPE	AS REQD.
17	1/2"/3/4"/1" SOCKET WELDED GLOBE VLV/ROOT VLV.	4
21	3/4" EQUAL TEE,CS	2
30	1/2" NPT (F) CS CAP	2
42	3/4"BW X 1/2"OD TUBE FITTING,SS-316	2

PRELIMINARY

REVIEWED										
			AC	PB	PB	AAM	PRELIMINARY		0	27.01.15
			APPROVED	REVIEWED	CHECKED	DRAWN	DESCRIPTION	RELEASE STATUS	REV.	DATE

INSTRUMENT INSTALLATION DIAGRAM

PANKI THERMAL POWER STATION
1 x 660 MW UNIT
KANPUR (UP)

UTTAR PRADESH RAJYA VIDYUT UTPADAN NIGAM LIMITED

DEVELOPMENT CONSULTANTS PVT. LTD
CONSULTING ENGINEERS

JOB NO. 14A14 | SCALE : NIL
DWG. NO. 14A14-DWG-I-0010 | SHT. 18 OF 19 | REV. 0

FILE NAME 14A14-DWG-I-0010-R0

A3 (9-96) [420x297]

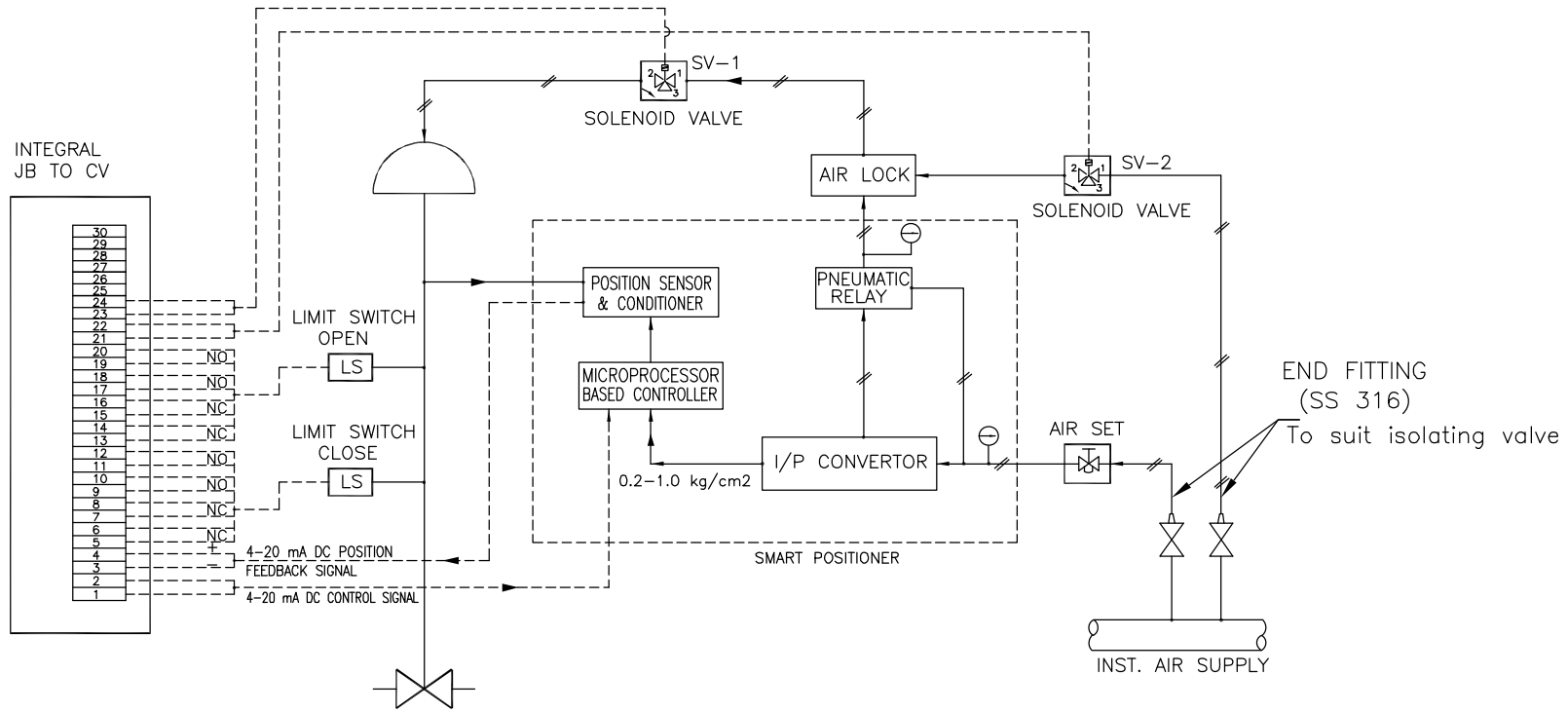

CONTROL VALVE

NOTE:–

1. SOLENOID VALVE (SV–1) WILL BE PROVIDED, IF REQUIED FOR ON/OFF DUTY VALVE OR FOR OVER–RIDING THE CONTROLLER SIGNAL. OR FOR INTERLOCK CONDITION.
2. SOLENOID VALVE (SV–2) IS PROVIDED FOR VALVE STAYPUT POSITION REQUIREMENT ON CONTROLLER SIGNAL FAILURE.
3. SOLENOID VALVES PORT CONDITION:
   PORT 1 AND 2 SHALL BE CONNECTED UNDER DE–ENERGISED CONDITION.
   PORT 2 AND 3 SHALL BE CONNECTED UNDER ENERGISED CONDITION.
4. FOR ON/OFF DUTY PNEUMATIC CONTROL VALVE THE FOLLOWING ACCESSORIES SHALL NOT BE APPLICABLE:–
   a) POSITIONER b) POSITIONER TRANSMITTER
   c) I/P CONVERTOR d) AIR LOCK
   e) SMART POSITIONER
5. TWELVE (12) METERS (MIN.) OF COPPER TUBING FROM INST. AIR HDR ISOLATING VALVE TO CONTROL VALVE IS TO BE SUPPLIED ALONGWITH CONTROL VALVE. THE TUBING SHALL BE SS316 FULLY ANEALEAD,SOFT, PVC COATED CONFORMING TO ASTM–B75
6. INST AIR HDR ISOLATING VALVE HAVING SCREWED CONNECTION AS PER IS–554 SHALL BE PROVIDED

CONTROL VALVE
(WITH PNEUMATIC ACTUATOR)

PRELIMINARY

REVIEWED										
			AC	PB	PB	AAM	PRELIMINARY		0	27.01.15
			APPROVED	REVIEWED	CHECKED	DRAWN	DESCRIPTION	RELEASE STATUS	REV.	DATE

INSTRUMENT INSTALLATION DIAGRAM

PANKI THERMAL POWER STATION
1 x 660 MW UNIT
KANPUR (UP)

UTTAR PRADESH RAJYA VIDYUT UTPADAN NIGAM LIMITED

DEVELOPMENT CONSULTANTS PVT. LTD
CONSULTING ENGINEERS

JOB NO. 14A14 | SCALE : NIL
DWG. NO. 14A14–DWG–I–0010 | SHT. 19 OF 19 | REV. 0

FILE NAME 14A14–DWG–I–0010–R0

A3 (9–96) [420x297]