ALL DIMENSIONS ARE IN MILLIMETRES. FOR TOLERANCES OF UNTOLERANCED DIMENSIONS DURING MANUFACTURE REFER RELEVANT QCP / QP.

DRAWING NO: 3-V-0000-17554

SL. No.	DRAWING No.	COMP.CODE	MATL.SPECN.	SCRAP SORT	DIMENSIONS ØD	ØD1	ØD2	H1	H2	ØD3	ØD4	STEM SIZE	ASSY. Wt. (Kg)	APPLICABLE VALVES
1	3-V-N073-17554/01	93 106 038 0000	SA 105 NORMALISED CERTIFY	10	40	32.5	19.5	20	8	17	23	3/4"	0.10	2"-C150
2	3-V-N081-17554/01	93 106 039 0000		10	40	32.5	19.5	14	8	17	23	3/4"	0.08	2"-C300
3	3-V-N025-17554/01	93 106 050 0000		10	48	35.7	22.7	17	5	21	27	7/8"	0.15	3"-C150&300
4	3-V-N033-17554/01	93 106 051 0000		10	50	38.9	25.9	17	5	23	29	1	0.16	4"-C150&400
5	3-V-N001-17554/01	93 106 052 0000		10	58	45.2	29.0	22	10	27	33	1 1/8"	0.25	6"-C150
6	3-V-N017-17554/01	93 106 053 0000		10	58	48.4	32.2	22	10	29	35	1 1/4"	0.22	6"-C300
7	3-V-N009-17554/01	93 106 054 0000		10	62	48.4	32.2	25	10	29	35	1 1/4"	0.32	8"-C150
8	3-V-N089-17554/01	93 106 055 0000		10	62	51.6	35.4	25	10	33	39	1 3/8"	0.30	8"-C300
9	3-V-N057-17554/01	93 106 056 0000		10	70	51.6	35.4	25	10	33	39	1 3/8"	0.38	10"-C150
10	3-V-N041-17554/01	93 106 057 0000		10	70	57.9	38.6	25	10	35	42.5	1 1/2"	0.55	12"-C150
11	3-V-N065-17554/01	93 106 058 0000		10	70	61.1	41.7	25	10	37	46.5	1 5/8"	0.50	10"-C300
12	3-V-K397-17554/02	93 106 059 0000		10	75	61.1	41.7	35	10	37	46.5	1 5/8"	0.60	12"-C300
13	3-V-N647-17554/01	93 107 917 0000		10	82	67.5	48.1	37	12	44.1	52.1	1 7/8"	0.80	16"-C300
14	3-V-N667-17554/01	93 108 959 0000		10	78	64.3	44.9	35	10	40.9	50.9	1 3/4"	0.58	16"-C150
15	3-V-U134-17554/01	93 110 314 0000		10	85	73.8	51.3	30	12	47.3	57.3	2"	0.69	20"-C150
16	3-V-U123-17554/01	93 110 316 0000		10	92	77	54.5	37	12	50.5	60.5	2 1/8"	0.78	20"-C300
17	3-V-U124-17554/01	93 110 420 0000		10	85	73.8	51.3	37	12	47.3	57.3	2"	0.81	20"-C150
18	3-V-UB49-17554	93 206 504 0000		10	122	105.6	76.7	40	15	72.7	82.7	3"	1.75	32"-C150
19	3-V-F601-17554/01	93 110 871 0000	SA182 F6a cl.3 HT,CERTIFY	40	48	35.7	22.7	17	5	21	27	7/8"	0.15	3"-C150&600
20	3-V-NG10-17554/01	93 201 985 0000	ASTM A182 F22 cl.3 NT,CERTIFY	20	92	77	54.5	37	12	50.5	60.5	2 1/8"	0.78	20"-C300

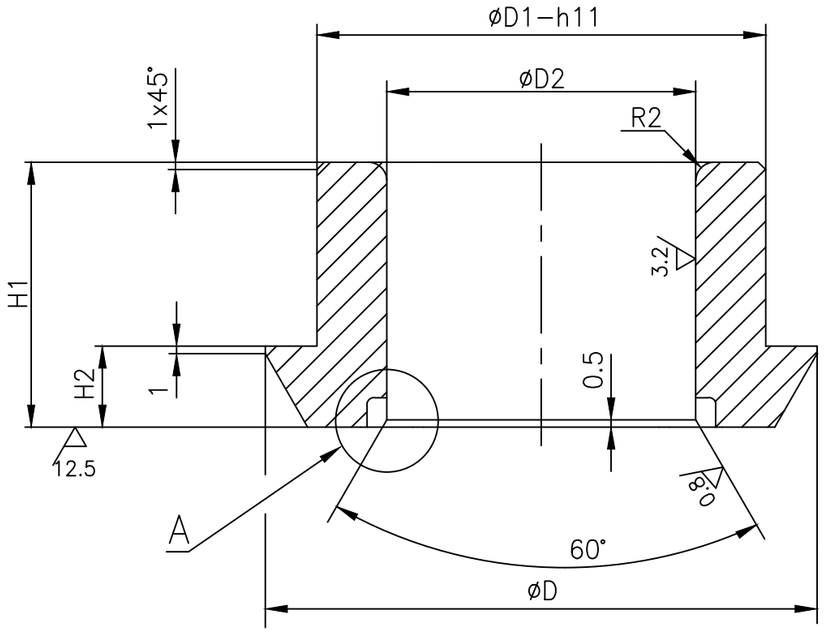

3.2 0.8

Ø30-Ø50 h11	0
	-0.160
Ø50-Ø80 h11	0
	-0.190
Ø80-Ø120 h11	0
	-0.220

NOTE:-

01. HARDNESS FOR STELLITE-21 = 20 HRC (MIN.)

DETAIL-A

(DOTTED LINE INDICATES FINISHED COMPONENT PROFILE)

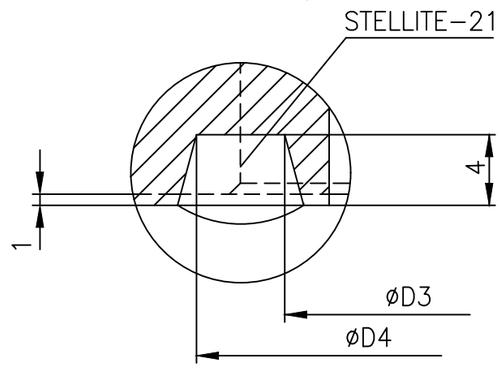

NO OF	DESCRIPTION	MATL CODE	MATL SPECN	HEAT TREATMENT	SCRAP SORT	NET WT (kg)	GROSS WT (kg)	DRAWING No. / COMP. CODE	ITEM No

TYPE OF PRODUCT OR NAME OF CUSTOMER/PROJECT: CS

BHARAT HEAVY ELECTRICALS LTD., UNIT: HIGH PRESSURE BOILER PLANT. TIRUCHIRAPALLI-620014.

365-191 02.03.2021

	NAME	SIGN	DATE	NO.OF VAR.
DRN	T.R.R.MURTHY		04.07.03	—
CHD	P.BOOMINATHAN		04.07.03	
APPD	K.S.RAMAN		04.07.03	

DEPT: VL; CODE: 320; SCALE: NTS; WEIGHT (KG): -; REFERENCE INFORMATIONS; NO. OF ITEMS: —

TITLE: BACK SEAT ASSY.; CARD CODE: U 01; DRAWING NO. 3-V-0000-17554; REV 08

DCP No.	ALTD:	APPD:	DCP No.	ALTD:	APPD:
-	RPS	SSK	801568	MS	KRS
	CHD: MK	DT: 26.10.23		CHD: SSK	DT: 01.08.13

REV		REV	
08	TYPE No. UB49 INCLUDED.	07	STELLITE-21 WAS ECoCrA NOTES UPDATED
ZONE -		ZONE -	

CAUTION: The information on this document is the property of BHARAT HEAVY ELECTRICALS LTD. It must not be used directly or indirectly in any way detrimental to the interest of the company.

Size A3

ALL DIMENSIONS ARE IN MILLIMETRES. FOR TOLERANCES OF UNTOLERANCED DIMENSIONS DURING MANUFACTURE REFER RELEVANT QCP / QP.

DRAWING NO: 3-V-0000-95602

SL. No.	DRAWING No.	COMP.CODE	MATL.SPECN.	SUGGESTED SIZE	GROSS Wt. (Kg)	DIMENSIONS ØD	ØD1 h11	ØD2 H11	H1	H2	ØD3	ØD4	SCRAP SORT	NET Wt. (Kg)	APPLICABLE VALVE
01	3.V.2478.95602/01	93 107 245 0000	SA182-F316L SH,CERTIFY	ø60x35	0.78	54	44	28.5	25	8	–	–	46	0.21	3"-C300 SV RV
02	3.V.P338.95602	93 108 222 0000		ø80x53	2.10	74	64	44.5	43	12	–	–	46	0.58	8"-C300 SV RV
03	3.V.P339.95602	93 108 397 0000		ø56x28	0.54	52	40	24.3	19	8	–	–	46	0.15	2"-C300 SV RV
04	3.V.P340.95602	93 108 482 0000		ø70x45	0.54	62	52	36.5	35	10	–	–	46	0.58	6"-C300 SV RV
05	3.V.U049.95602	93 110 001 0000	A276-Gr.410 HT,CERTIFY	ø56x28	0.54	52	40	24.3	19	8	–	–	40	0.15	2"-C300 SV RV
06	3.V.U050.95602	93 110 002 0000		ø60x35	0.78	54	44	28.5	25	8	–	–	40	0.21	3"&4"-C300 SV RV
07	3.V.U052.95602	93 110 003 0000		ø70x45	0.54	62	52	36.5	35	10	–	–	40	0.58	6"-C300 SV RV
08	3.V.U053.95602	93 110 004 0000		ø80x53	2.10	74	64	44.5	43	12	–	–	40	0.60	8"-C300 SV RV
09	3.V.P725.95602	93 204 711 0000	SA182 F60 SH, CERTIFY	ø56x33	0.64	54	44	28.5	25	8	–	–	46	0.21	4"-C300 SV RV
10	3.V.P726.95602	93 204 720 0000		ø76x43	1.53	62	52	36.5	35	10	–	–	46	0.58	6"-C300 SV RV
11	3.V.P727.95602	93 204 691 0000		ø76x51	1.82	74	64	44.5	43	12	–	–	46	0.60	8"-C300 SV RV
12	3.V.P779.95602	93 205 473 0000	SA 351 CF3M SH, CERTIFY	92203972	1.53	62	52	36.5	35	10	–	–	46	0.58	6"-C300 SV RV
13	3.V.P767.95602	93 205 626 0000		92203955	0.64	54	44	28.5	25	8	–	–	46	0.21	3"-C300 SV RV
14	3.V.P831.95602	93 205 793 0000		92206012	2.10	74	64	44.5	43	12	–	–	46	0.58	8"-C300 SV RV
#15	3.V.P883.95602	93 206 285 0000		92206272	0.26	52	40	24.3	19	8	–	–	46	0.15	2"-C300 SV RV
#16	3.V.P884.95602	93 206 290 0000		92206273	0.88	54	44	28.5	25	8	–	–	46	0.21	3"&4"-C300 SV RV

12.5 / 3.2 0.8

ø30-ø50 h11	0
	-0.160
ø50-ø80 h11	0
	-0.190
ø30-ø50 H11	+0.160
	0
ø18-ø30 H11	+0.130
	0

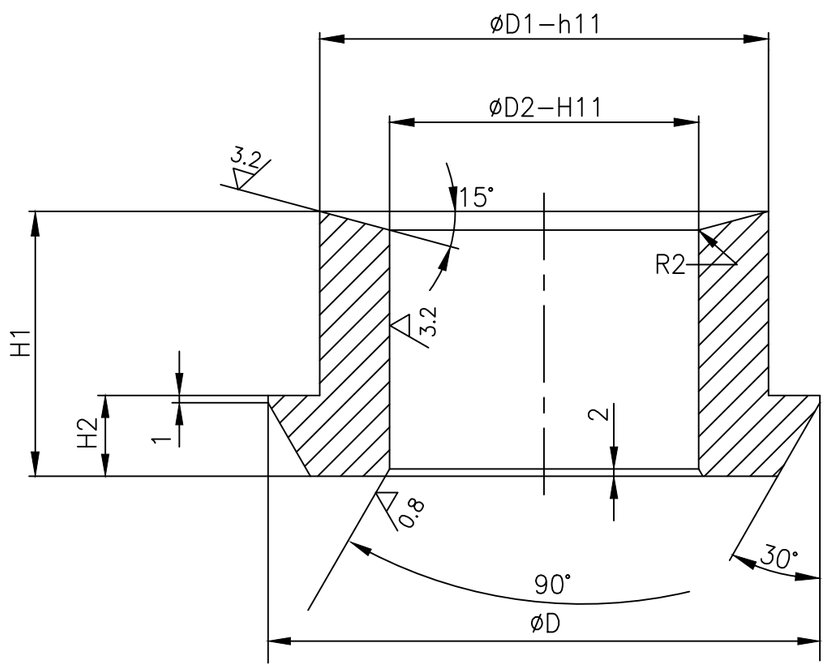

NOTES:-

01. # MARKED ITEMS IGC TEST SHALL BE CONDUCTED.

NO OF	DESCRIPTION	MATL CODE	MATL SPECN	HEAT TREATMENT	SCRAP SORT	NET WT (kg)	GROSS WT (kg)	DRAWING No. / COMP. CODE	ITEM No

TYPE OF PRODUCT
OR NAME OF
CUSTOMER/PROJECT

365-191
02.03.2021

BHARAT HEAVY ELECTRICALS LTD.,
UNIT: HIGH PRESSURE BOILER PLANT.
TIRUCHIRAPALLI-620014.

	NAME	SIGN	DATE	NO.OF VAR.
DRN	R.P.SINGH		02.12.20	—
CHD	SAMEER BHAT		02.12.20	
APPD	S.SATHEES		02.12.20	

DEPT	SCALE	WEIGHT (KG).	REFERENCE INFORMATIONS	NO. OF ITEMS
VL	NTS	–	CAD:C395602	—

CODE 320

TITLE	CARD CODE	DRAWING NO.	REV
BACK SEAT	U 01	3-V-0000-95602	08

Size A3

DCP No.	ALTD: RPS	APPD: SSK
–	CHD: MK	DT: 21.10.22

REV	
08	SL. NO. 15 & 16 INCLUDED. NOTES INCLUDED.
ZONE –	

DCP No.	ALTD: RPS	APPD: SSK
–	CHD: SAB	DT: 02.12.20

REV	
07	SL. NO. 14 INCLUDED.
ZONE –	

CAUTION: The information on this document is the property of BHARAT HEAVY ELECTRICALS LTD. It must not be used directly or indirectly in any way detrimental to the interest of the company.

FOR TOLERANCES OF UNTOLERANCED DIMENSIONS DURING MANUFACTURE REFER RELEVANT QCP/QR.

DRAWING NO. 3-V-0000-17058/04

ALL DIMENSIONS ARE IN MILLIMETRES

12.5 / 3.2 / 0.8

30–50 h11	0	−0.160
50–80 h11	0	−0.190

SL.	STEM SIZE.	DRAWING No.	COMP. CODE	RAW MATERIAL. SUGG. SIZE	SPECN.	CODE	SCRAP SORT	WT.	DIMENSIONS ØD1	ØD2	ØD3	H1	H2	NET WT(KG)	SIZE/RATING.
01	3/4"	3-V-N201-17058	93 104 667 0000	ø45X30	A276 Gr 410 H&T (CERTIFY)	–	40	0.37	40	32.5	19.5	20	8	0.10	2"/150 CL
02	7/8"	3-V-N202-17058	93 104 668 0000	ø53X27		–	40	0.47	48	35.7	22.7	17	5	0.15	3"/150&300 CL
03	1"	3-V-N203-17058	93 104 669 0000	ø55X27		–	40	0.5	50	38.9	25.9	17	5	0.16	4"/150 CL, 4"/300 CL
04	1 1/8"	3-V-N204-17058	93 104 670 0000	ø63X31		–	40	0.76	58	45.2	29.0	22	10	0.25	6"/150 CL
05	1 1/4"	3-V-N205-17058	93 104 671 0000	ø67X35		–	40	0.97	62	48.4	32.2	25	10	0.32	8"/150 CL
06	1 3/8"	3-V-N206-17058	93 104 672 0000	ø75X35		15 924 115	40	1.21	70	51.6	35.4	25	10	0.38	10"/150 CL
07	1 1/2"	3-V-N207-17058	93 104 785 0000	ø75X35		15 924 115	40	1.21	70	57.9	38.6	25	10	0.55	12"/150 CL
08	3/4"	3-V-N208-17058	93 104 978 0000	ø45X22		–	40	0.37	40	32.5	19.5	14	8	0.08	2"/300 CL
09	1 1/4"	3-V-N211-17058	93 104 979 0000	ø63X30		–	40	0.76	58	48.4	32.2	22	10	0.22	6"/300 CL
10	1 3/8"	3-V-N212-17058	93 104 980 0000	ø67X35		–	40	0.97	62	51.6	35.4	25	10	0.30	8"/300 CL
11	1 5/8"	3-V-N213-17058	93 104 981 0000	ø75X35		–	40	1.87	70	61.1	41.7	25	10	0.50	10"/300 CL
12	1 5/8"	3-V-N214-17058	93 104 982 0000	ø80X45		–	40	1.78	75	61.1	41.7	35	10	0.60	12"/300 CL
13	1 1/8"	3-V-N223-17058	93 105 008 0000	ø63X31	A182 F321 SOL. HEATTREATED CERTIFY	–	46	0.76	58	45.2	29.0	22	10	0.25	6"/150 CL
14	1"	3-V-M357-17058	93 105 300 0000	ø55X27	SA182 F304 SOLUTION HEAT TREATED CERTIFY	–	46	0.5	50	38.9	25.9	17	5	0.16	4"/150CL, 4"/300CL
15	1 1/4"	3-V-M358-17058	93105301 0000	ø63X30		–	46	0.76	58	48.4	32.2	22	10	0.22	6"/300CL
16	1 3/8"	3-V-M359-17058	93105302 0000	ø67X35		–	46	0.97	62	51.6	35.4	25	10	0.3	8"/300CL
17	1 1/4"	3-V-N243-17058	93105776 0000	ø67X35	ASTM SA182 GR-F316L-CERTIFY		4	0.97	62	48.4	32.2	25	10	0.32	8"/150CL

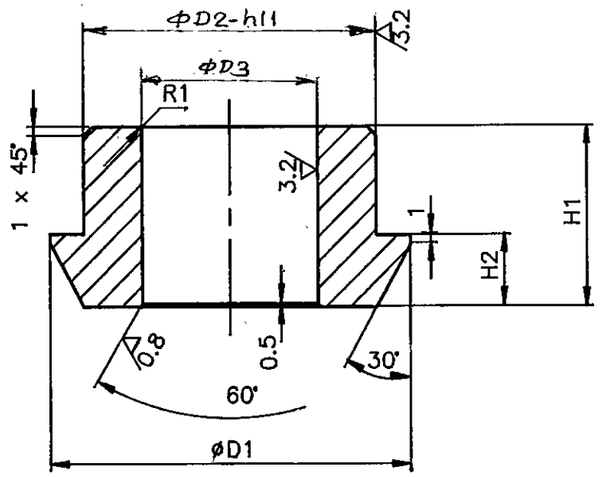

TOLERANCE FOR UNTOLERANCED DIMENSIONS	
UPTO 6 MM	= ± 0.1 MM
> 6 UPTO 120 MM	= ± 0.2 MM
MORE THAN 120 MM	= ± 0.5 MM
ANGULAR TOLERANCE	= ± 0.5 Deg.
CHAMFER	= ± 5 Deg.

REV	DATE	ALTD: N.D.PALI	REV	DATE	ALTERED: N.DHANAPAL	REV	DATE	ALTERED N.DHANAPAL
05	08.07.95	CHKD: APPD	04	21-10-94	CHECKED:	03	10-5-94	CHECKED
S.L.NO. 17 IS INCLUDED.			1. SL.NO. 14,15,16 INCLUDED			1. SL.NO. 13 ADDED		

CAUTION: The information on this document is the property of BHARAT HEAVY ELECTRICALS LTD. It must not be used directly or indirectly in any way detrimental to the interest of the company.

RETRACED WITH REVISION NO.2 ON 10·05·94

NO OFF	DESCRIPTION	MATL CODE	MATL SPECN	HEAT TREATMENT	SCRAP SORT	NET WT (kg)	GROSS WT (kg)	DRAWING No	ITEM No

TYPE OF PRODUCT
OR NAME OF
CUSTOMER/PROJECT

BHARAT HEAVY ELECTRICALS LTD.,
UNIT: HIGH PRESSURE BOILER PLANT.
TIRUCHIRAPALLI-620014.

	NAME	SIGN	DATE
DRN	T.R.R.MURTHY	T.R.R.	
CHD	N.DHANAPAL	N. Dhanapal	10/5/94
APPD	A.V.NATHAN		10/5/94

NO. OF VAR.

DEPT	GRADE OF UNTOL.DIM	SCALE	WEIGHT (KG).	REFERENCE INFORMATIONS	NO. OF ITEMS
VL	~~C / M / F~~	N.T.S	—	—	
CODE 320					

TITLE	CARD CODE	DRAWING NO.	REV
BACK SEAT BUSH	U 01	3-V-0000-17058	05

ALL DIMENSIONS ARE IN MILLIMETRES. FOR TOLERANCES OF UNTOLERANCED DIMENSIONS DURING MANUFACTURE REFER RELEVANT QCP / QP.

DRAWING NO. 3-V-0000-24043

SL. No.	DRAWING No.	COMP.CODE	MATL.SPECN.	SUGGESTED SIZE	SCRAP SORT	DIMENSIONS							GROSS WT IN KG	ASSY. Wt. (Kg)	APPLICABLE VALVES
						ØD	ØD1 h11	ØD2 H11	H1	H2	ØD3	ØD4			
01	3.V.U192.24043	93 110 837 0000	SA182-F6a-cl.3 HT,CERTIFY	ø80x53	40	74	64	44.5	43	12	–	–	2.10	0.58	8"-C300 SV RV

12.5 / 3.2 0.8

ø50-ø80 h11	0
	-0.190
ø30-ø50 H11	+0.160
	0

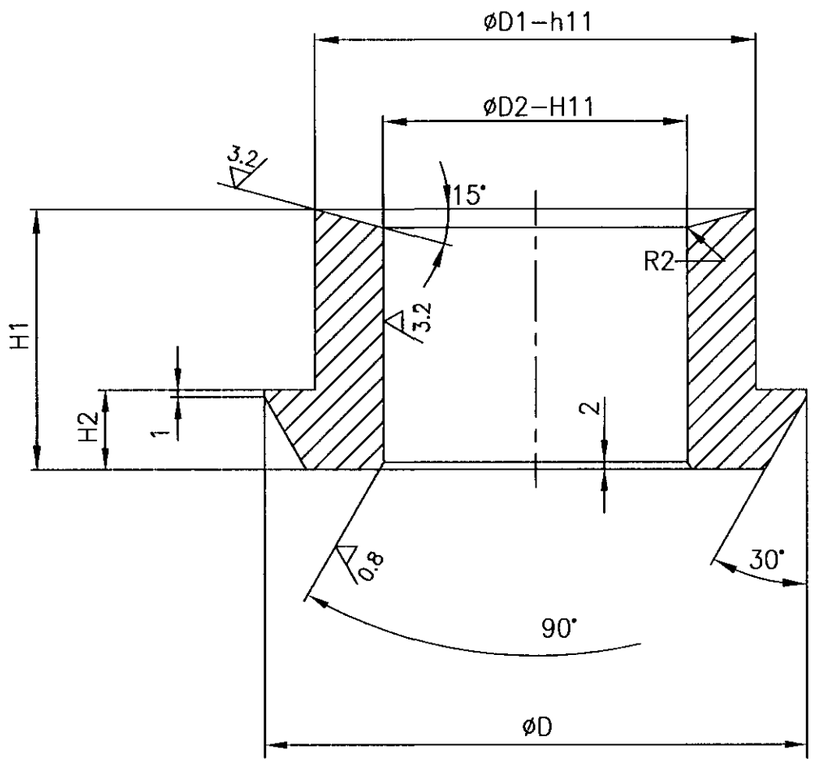

NO OFF	DESCRIPTION	MATL CODE	MATL SPECN	HEAT TREATMENT	SCRAP SORT	NET WT (kg)	GROSS WT (kg)	DRAWING No	ITEM No

TYPE OF PRODUCT OR NAME OF CUSTOMER/PROJECT: CS

BHARAT HEAVY ELECTRICALS LTD.
UNIT: HIGH PRESSURE BOILER PLANT.
TIRUCHIRAPALLI 620014.
365-121

	NAME	SIGN	DATE	NO.OF VAR.
DRN	T.R.RAMAMURTHY		20.06.03	–
CHD	P.BOOMINATHAN		20.06.03	
APPD	K.S.RAMAN		20.06.03	

DEPT	SCALE	WEIGHT (KG).	REFERENCE INFORMATIONS	NO. OF ITEMS
VL	NTS.	–	CAD:C324043	–
CODE 320				

TITLE	CARD CODE	DRAWING NO.	REV
BACK SEAT BUSH	U 01	3-V-0000-24043	00

REV	DATE	ALTERED
		CHD & APPD

CAUTION: The information on this document is the property of BHARAT HEAVY ELECTRICALS LTD. It must not be used directly or indirectly in any way detrimental to the interest of the company.

Size A3

ALL DIMENSIONS ARE IN MILLIMETRES. FOR TOLERANCES OF UNTOLERANCED DIMENSIONS DURING MANUFACTURE REFER RELEVANT QCP / QP.

DRAWING NO. 3-V-0000-17090

SL. No.	DRAWING No.	COMP.CODE	RAW MATL. DETAILS: MATL. SPECN.	SUGG.SIZE	SCRAP SORT	Wt. (Kg)	DIMENSIONS: øD	øD1	øD2	øD3	øD4	H1	H2	STEM SIZE	NET Wt. (Kg)	APPLICABLE TYPE
01	3-V-N073-17090/4	93 104 019 4000	SA 105, NORMALISED,CERTIFY	ø45X30	10	0.37	40	32.5	–	14	24	21	9	¾"	0.13	2"-C150
02	3-V-N081-17090/4	93 104 020 4000		ø45X24		0.31	40	32.5	–	14	24	15	9	¾"	0.11	2"-C300
03	3-V-N025-17090/4	93 104 021 4000		ø53X27		0.47	48	35.7	6	20	30	18	6	⅞"	0.185	3"-C150&300
04	3-V-N033-17090/4	93 104 022 4000		ø55X27		0.50	50	38.9	8	22	32	18	6	1	0.20	4"-C150&300
05	3-V-N001-17090/4	93 104 023 4000		ø63X31		0.76	58	45.2	12	26	36	23	11	1⅛"	0.29	6"-C150
06	3-V-N017-17090/4	93 104 024 4000		ø63X31		0.76	58	48.4	14	28	38	23	11	1¼"	0.26	6"-C300
07	3-V-N009-17090/4	93 104 025 4000		ø67X35		0.97	62	48.4	14	28	38	26	11	1¼"	0.37	8"-C150
08	3-V-N089-17090/4	93 104 026 4000		ø67X35		0.97	62	51.6	18	32	42	26	11	1⅜"	0.35	8"-C300
09	3-V-N057-17090/4	93 104 027 4000		ø75X35		1.21	70	51.6	18	32	42	26	11	1⅜"	0.44	10"-C150
10	3-V-N041-17090/5	93 104 028 4000		ø75X35		1.21	70	57.9	20	34.7	44.7	26	11	1½"	0.61	12"-C150
11	3-V-N065-17090/5	93 104 029 4000		ø75X35		1.21	70	61.1	22	37.7	47.7	26	11	1⅝"	0.56	10"-C300
12	3-V-N105-17090/5	93 104 030 4000		ø80X45		1.78	75	61.1	22	37.7	47.7	36	11	1⅝"	0.66	12"-C300
13	3-V-N224-17090/5	93 105 025 4000		ø90X45		2.3	85	73.8	30	47.3	57.3	38	13	2"	0.83	20"-C150
14	3-V-N350-17090/3	93 106 862 4000		ø85X45		2.0	78	64.3	26	40.9	50.9	36	11	1¾"	0.78	16"-C150
15	3-V-N361-17090/3	93 106 878 4000		ø100X47		2.9	95	83.3	38	53.7	63.7	41	13	2¼"	1.4	24"-C150
16	3-V-N436-17090/3	93 107 145 4000		ø90X45		2.3	82	67.5	29	44.1	54.1	38	13	1⅞"	0.92	16"-C300
17	3-V-N437-17090/3	93 107 146 4000		ø100X45		2.8	92	77	35	50.5	60.5	38	13	2⅛"	1.1	20"-C300
18	3-V-K795-17090/3	93 107 984 4000		ø80X40		1.6	75	61.1	22	37.7	47.7	34	11	1⅝"	0.64	14"-C150
19	3-V-K796-17090/3	93 107 985 4000		ø85X45		2.1	78	64.3	26	40.9	50.9	39	11	1¾"	0.81	16"-C150
20	3-V-K820-17090/3	93 107 986 4000		ø90X40		2.0	85	73.8	30	47.3	57.3	31	13	2"	0.76	20"-C150
21	3-V-K821-17090/3	93 107 987 4000		ø100X60		3.7	95	83.3	38	53.7	63.7	53	13	2¼"	1.8	24"-C150
22	3-V-N598-17090/3	93 107 988 4000		ø85X35		1.6	78	64.3	26	40.9	50.9	28	11	1¾"	0.6	14"-C300
23	3-V-K797-17090/3	93 107 989 4000		ø90X50		2.5	82	67.5	29	44.1	54.1	41	13	1⅞"	1.2	16"-C300
24	3-V-K822-17090/3	93 107 990 4000		ø100X60		2.7	92	77	35	50.5	60.5	52	13	2⅛"	1.8	20"-C300
25	3-V-N834-17090/1	93 109 739 4000		ø105x50		3.4	100	86.5	41	56.8	66.8	40	15	2⅜"	1.5	26"-C150
26	3-V-N847-17090/1	93 109 740 4000		ø110X50		3.73	105	89.7	44	60.0	70.0	40	15	2½"	1.5	28"-C150
27	3-V-N848-17090/1	93 109 741 4000		ø120X50		4.44	112	96.0	50	66.3	76.3	40	15	2¾"	1.7	30"-C150
28	3-V-N827-17090/1	93 109 742 4000		ø125X50		4.82	122	105.6	56	72.7	82.7	40	15	3"	2.0	32"-C150
29	3-V-N846-17090/1	93 109 743 4000		ø145X50		6.5	138	121.4	63	79.1	89.1	40	15	3¼"	2.6	36"-C150
30	3-V-NC06-17090/1	93 110 803 4000		ø63X25		0.61	58	45.2	12	26	36	17	7	1⅛"	0.15	6"-C150
31	3-V-F601-17090/1	93 110 871 4000	SA182F6a,CL3 HT,CERTIFY	ø53X27	40	0.47	48	35.7	6	20	30	18	6	⅞"	0.185	3"-C150&600
32	3-V-NG10-17090	93 201 985 4000	ASTM A182 F22 CL.3 CERTIFY	ø80X35	20	2.8	92	77	35	50.5	60.5	38	13	2⅛"	1.1	20"-C300
33	3-V-NG86-17090	93 202 610 4000	ASTM A182 F91 NT, CERTIFY	ø100X45	20	1.6	78	64.3	26	40.9	50.9	28	11	1¾"	0.6	14"-C300
34	3-V-NJ26-17090	93 203 553 4000		ø80X45	20	2.3	80	67.5	29	44.1	54.1	38	13	1⅞"	0.92	16"-C300

DETAIL-A

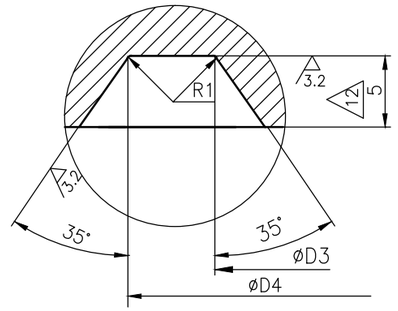

ø30-ø50 h11	0 / -0.160
ø50-ø80 h11	0 / -0.190
ø80-ø120 h11	0 / -0.220
ø120-ø180 h11	0 / -0.250

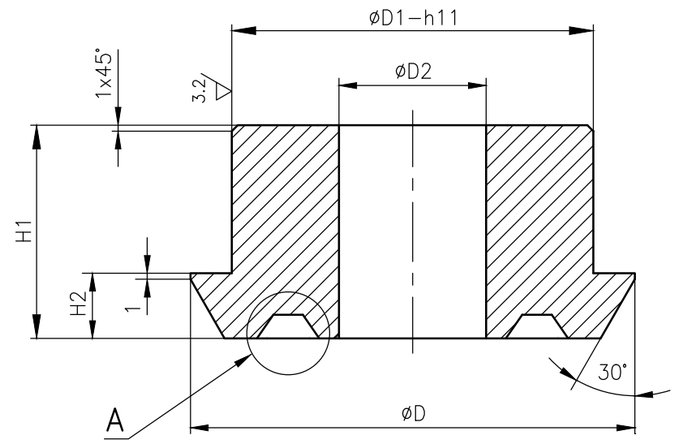

NO OFF	DESCRIPTION	MATL CODE	MATL SPECN	HEAT TREATMENT	SCRAP SORT	NET WT (kg)	GROSS WT (kg)	DRAWING No	ITEM No
–	–	–	–	–	–	–	–	–	–

REV	DATE	ALTERED	REV	DATE	ALTERED
16	16.07.15	M.S.SELVAM; CHD & APPD MS & SSK	15	25.09.14	A.MARIMUTHU; CHD & APPD MS & SSK
		DRAWING No. 3-V-N834-17090 DIMENSION 100 WAS 102 DCP : 801963			SL.No.34 INCLUDED
14	06.08.12	M.SRINIVASAN; CHD & APPD M.RAJRKUMAR	13	17.05.10	M.SRINIVASAN; CHD & APPD M.RAJRKUMAR
		SL.No.33 INCLUDED			SL.No.32 INCLUDED

CAUTION: The information on this document is the property of BHARAT HEAVY ELECTRICALS LTD. It must not be used directly or indirectly in any way detrimental to the interest of the company.

TYPE OF PRODUCT OR NAME OF CUSTOMER/PROJECT: CS

BHARAT HEAVY ELECTRICALS LTD.
UNIT: HIGH PRESSURE BOILER PLANT.
TIRUCHIRAPALLI 620014.
365-121

	NAME	SIGN	DATE	NO.OF VAR.
DRN	T.R.R.MURTHY		04.07.03	
CHD	P.BOOMINATHAN		04.07.03	
APPD	K.S.RAMAN		04.07.03	

DEPT: VL
CODE: 320
SCALE: NTS.
WEIGHT (KG): —
REFERENCE INFORMATIONS: CAD:3V017090
NO. OF ITEMS

TITLE: BACK SEAT ROUGH
CARD CODE: U 01
DRAWING NO. 3-V-0000-17090
REV 16

Size A3

ALL DIMENSIONS ARE IN MILLIMETRES. FOR TOLERANCES OF UNTOLERANCED DIMENSIONS DURING MANUFACTURE REFER RELEVANT QCP / QP.

DRAWING NO: 3-V-0000-17554

SL. No.	DRAWING No.	COMP.CODE	MATL.SPECN.	SCRAP SORT	DIMENSIONS ØD	ØD1	ØD2	H1	H2	ØD3	ØD4	STEM SIZE	ASSY. Wt. (Kg)	APPLICABLE VALVES
1	3-V-N073-17554/01	93 106 038 0000	SA 105 NORMALISED CERTIFY	10	40	32.5	19.5	20	8	17	23	3/4"	0.10	2"-C150
2	3-V-N081-17554/01	93 106 039 0000		10	40	32.5	19.5	14	8	17	23	3/4"	0.08	2"-C300
3	3-V-N025-17554/01	93 106 050 0000		10	48	35.7	22.7	17	5	21	27	7/8"	0.15	3"-C150&300
4	3-V-N033-17554/01	93 106 051 0000		10	50	38.9	25.9	17	5	23	29	1	0.16	4"-C150&400
5	3-V-N001-17554/01	93 106 052 0000		10	58	45.2	29.0	22	10	27	33	1 1/8"	0.25	6"-C150
6	3-V-N017-17554/01	93 106 053 0000		10	58	48.4	32.2	22	10	29	35	1 1/4"	0.22	6"-C300
7	3-V-N009-17554/01	93 106 054 0000		10	62	48.4	32.2	25	10	29	35	1 1/4"	0.32	8"-C150
8	3-V-N089-17554/01	93 106 055 0000		10	62	51.6	35.4	25	10	33	39	1 3/8"	0.30	8"-C300
9	3-V-N057-17554/01	93 106 056 0000		10	70	51.6	35.4	25	10	33	39	1 3/8"	0.38	10"-C150
10	3-V-N041-17554/01	93 106 057 0000		10	70	57.9	38.6	25	10	35	42.5	1 1/2"	0.55	12"-C150
11	3-V-N065-17554/01	93 106 058 0000		10	70	61.1	41.7	25	10	37	46.5	1 5/8"	0.50	10"-C300
12	3-V-K397-17554/02	93 106 059 0000		10	75	61.1	41.7	35	10	37	46.5	1 5/8"	0.60	12"-C300
13	3-V-N647-17554/01	93 107 917 0000		10	82	67.5	48.1	37	12	44.1	52.1	1 7/8"	0.80	16"-C300
14	3-V-N667-17554/01	93 108 959 0000		10	78	64.3	44.9	35	10	40.9	50.9	1 3/4"	0.58	16"-C150
15	3-V-U134-17554/01	93 110 314 0000		10	85	73.8	51.3	30	12	47.3	57.3	2"	0.69	20"-C150
16	3-V-U123-17554/01	93 110 316 0000		10	92	77	54.5	37	12	50.5	60.5	2 1/8"	0.78	20"-C300
17	3-V-U124-17554/01	93 110 420 0000		10	85	73.8	51.3	37	12	47.3	57.3	2"	0.81	20"-C150
18	3-V-UB49-17554	93 206 504 0000		10	122	105.6	76.7	40	15	72.7	82.7	3"	1.75	32"-C150
19	3-V-F601-17554/01	93 110 871 0000	SA182 F6a cl.3 HT,CERTIFY	40	48	35.7	22.7	17	5	21	27	7/8"	0.15	3"-C150&600
20	3-V-NG10-17554/01	93 201 985 0000	ASTM A182 F22 cl.3 NT,CERTIFY	20	92	77	54.5	37	12	50.5	60.5	2 1/8"	0.78	20"-C300

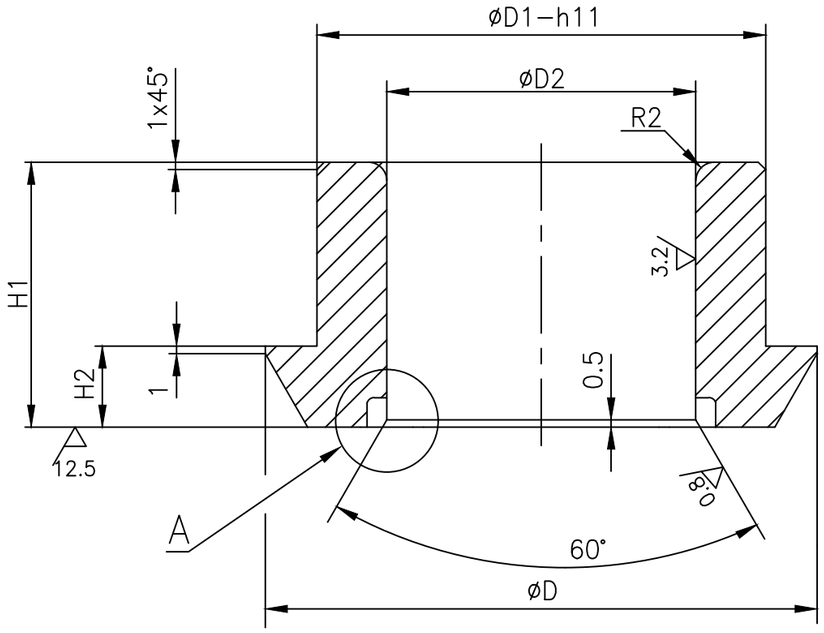

3.2 0.8

Ø30-Ø50 h11	0
	-0.160
Ø50-Ø80 h11	0
	-0.190
Ø80-Ø120 h11	0
	-0.220

NOTE:-

01. HARDNESS FOR STELLITE-21 = 20 HRC (MIN.)

DETAIL-A

(DOTTED LINE INDICATES FINISHED COMPONENT PROFILE)

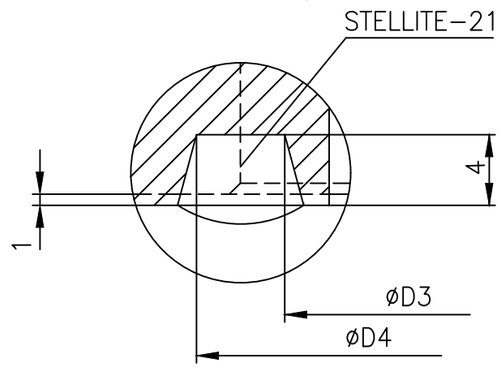

NO OF	DESCRIPTION	MATL CODE	MATL SPECN	HEAT TREATMENT	SCRAP SORT	NET WT (kg)	GROSS WT (kg)	DRAWING No. / COMP. CODE	ITEM No

TYPE OF PRODUCT OR NAME OF CUSTOMER/PROJECT: CS

BHARAT HEAVY ELECTRICALS LTD., UNIT: HIGH PRESSURE BOILER PLANT. TIRUCHIRAPALLI-620014.

365-191 02.03.2021

	NAME	SIGN	DATE	NO.OF VAR.
DRN	T.R.R.MURTHY		04.07.03	—
CHD	P.BOOMINATHAN		04.07.03	
APPD	K.S.RAMAN		04.07.03	

DEPT: VL; CODE: 320; SCALE: NTS; WEIGHT (KG): -; REFERENCE INFORMATIONS; NO. OF ITEMS: —

TITLE: BACK SEAT ASSY.; CARD CODE: U 01; DRAWING NO. 3-V-0000-17554; REV 08

DCP No.	ALTD:	APPD:	DCP No.	ALTD:	APPD:
-	RPS	SSK	801568	MS	KRS
	CHD: MK	DT: 26.10.23		CHD: SSK	DT: 01.08.13

REV		REV	
08	TYPE No. UB49 INCLUDED.	07	STELLITE-21 WAS ECoCrA NOTES UPDATED
ZONE -		ZONE -	

CAUTION: The information on this document is the property of BHARAT HEAVY ELECTRICALS LTD. It must not be used directly or indirectly in any way detrimental to the interest of the company.

Size A3

ALL DIMENSIONS ARE IN MILLIMETRES. FOR TOLERANCES OF UNTOLERANCED DIMENSIONS DURING MANUFACTURE REFER RELEVANT QCP / QP.

DRAWING NO: 3-V-0000-95602

SL. No.	DRAWING No.	COMP.CODE	MATL.SPECN.	SUGGESTED SIZE	GROSS Wt. (Kg)	DIMENSIONS ØD	ØD1 h11	ØD2 H11	H1	H2	ØD3	ØD4	SCRAP SORT	NET Wt. (Kg)	APPLICABLE VALVE
01	3.V.2478.95602/01	93 107 245 0000	SA182-F316L SH,CERTIFY	ø60x35	0.78	54	44	28.5	25	8	–	–	46	0.21	3"-C300 SV RV
02	3.V.P338.95602	93 108 222 0000		ø80x53	2.10	74	64	44.5	43	12	–	–	46	0.58	8"-C300 SV RV
03	3.V.P339.95602	93 108 397 0000		ø56x28	0.54	52	40	24.3	19	8	–	–	46	0.15	2"-C300 SV RV
04	3.V.P340.95602	93 108 482 0000		ø70x45	0.54	62	52	36.5	35	10	–	–	46	0.58	6"-C300 SV RV
05	3.V.U049.95602	93 110 001 0000	A276-Gr.410 HT,CERTIFY	ø56x28	0.54	52	40	24.3	19	8	–	–	40	0.15	2"-C300 SV RV
06	3.V.U050.95602	93 110 002 0000		ø60x35	0.78	54	44	28.5	25	8	–	–	40	0.21	3"&4"-C300 SV RV
07	3.V.U052.95602	93 110 003 0000		ø70x45	0.54	62	52	36.5	35	10	–	–	40	0.58	6"-C300 SV RV
08	3.V.U053.95602	93 110 004 0000		ø80x53	2.10	74	64	44.5	43	12	–	–	40	0.60	8"-C300 SV RV
09	3.V.P725.95602	93 204 711 0000	SA182 F60 SH, CERTIFY	ø56x33	0.64	54	44	28.5	25	8	–	–	46	0.21	4"-C300 SV RV
10	3.V.P726.95602	93 204 720 0000		ø76x43	1.53	62	52	36.5	35	10	–	–	46	0.58	6"-C300 SV RV
11	3.V.P727.95602	93 204 691 0000		ø76x51	1.82	74	64	44.5	43	12	–	–	46	0.60	8"-C300 SV RV
12	3.V.P779.95602	93 205 473 0000	SA 351 CF3M SH, CERTIFY	92203972	1.53	62	52	36.5	35	10	–	–	46	0.58	6"-C300 SV RV
13	3.V.P767.95602	93 205 626 0000		92203955	0.64	54	44	28.5	25	8	–	–	46	0.21	3"-C300 SV RV
14	3.V.P831.95602	93 205 793 0000		92206012	2.10	74	64	44.5	43	12	–	–	46	0.58	8"-C300 SV RV
#15	3.V.P883.95602	93 206 285 0000		92206272	0.26	52	40	24.3	19	8	–	–	46	0.15	2"-C300 SV RV
#16	3.V.P884.95602	93 206 290 0000		92206273	0.88	54	44	28.5	25	8	–	–	46	0.21	3"&4"-C300 SV RV

12.5 / 3.2 0.8

ø30-ø50 h11	0
	-0.160
ø50-ø80 h11	0
	-0.190
ø30-ø50 H11	+0.160
	0
ø18-ø30 H11	+0.130
	0

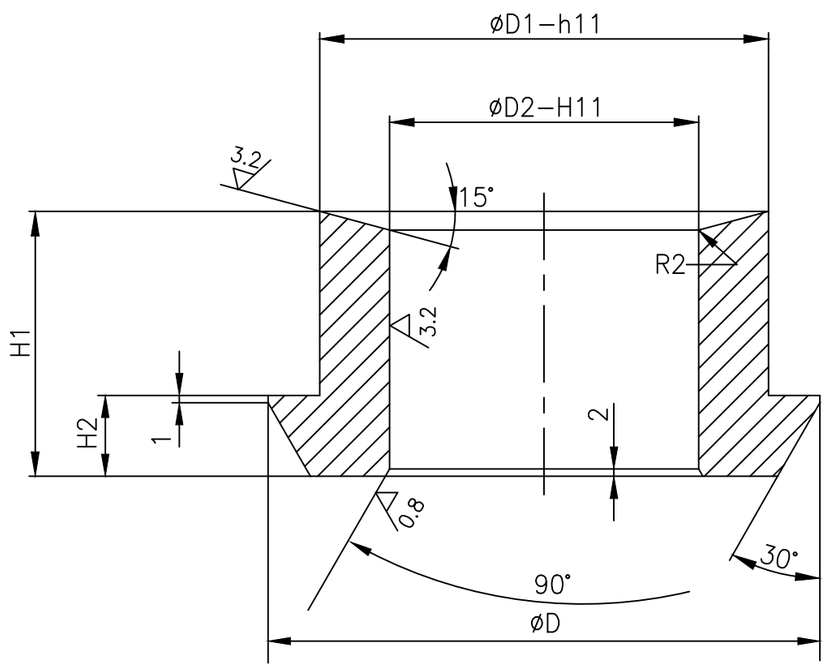

NOTES:-

01. # MARKED ITEMS IGC TEST SHALL BE CONDUCTED.

NO OF	DESCRIPTION	MATL CODE	MATL SPECN	HEAT TREATMENT	SCRAP SORT	NET WT (kg)	GROSS WT (kg)	DRAWING No. / COMP. CODE	ITEM No

TYPE OF PRODUCT
OR NAME OF
CUSTOMER/PROJECT

365-191
02.03.2021

BHARAT HEAVY ELECTRICALS LTD.,
UNIT: HIGH PRESSURE BOILER PLANT.
TIRUCHIRAPALLI-620014.

	NAME	SIGN	DATE	NO.OF VAR.
DRN	R.P.SINGH		02.12.20	—
CHD	SAMEER BHAT		02.12.20	
APPD	S.SATHEES		02.12.20	

DEPT	SCALE	WEIGHT (KG).	REFERENCE INFORMATIONS	NO. OF ITEMS
VL	NTS	–	CAD:C395602	—

CODE 320

TITLE	CARD CODE	DRAWING NO.	REV
BACK SEAT	U 01	3-V-0000-95602	08

Size A3

DCP No.	ALTD: RPS	APPD: SSK
–	CHD: MK	DT: 21.10.22

REV	
08	SL. NO. 15 & 16 INCLUDED. NOTES INCLUDED.
ZONE –	

DCP No.	ALTD: RPS	APPD: SSK
–	CHD: SAB	DT: 02.12.20

REV	
07	SL. NO. 14 INCLUDED.
ZONE –	

CAUTION: The information on this document is the property of BHARAT HEAVY ELECTRICALS LTD. It must not be used directly or indirectly in any way detrimental to the interest of the company.

ALL DIMENSIONS ARE IN MILLIMETRES.

FOR TOLERANCES OF UNTOLERANCED DIMENSIONS DURING MANUFACTURE REFER RELEVANT QCP/QP

REV	DATE	ALTERED	R.P.SINGH
07	27.12.19	CHD & APPD	SAMEER & SSK

SL. NO. 07 INCLUDED

6.3

CAUTION: The information on this document is the property of BHARAT HEAVY ELECTRICALS LTD. It must not be used directly or indirectly in any way detrimental to the interest of the company.

SL. No.	DRAWING No. / COMP.CODE	MATL.SPECN.	SUGGESTED MIN.SIZE	RAW MATL. Wt.(kg)	SCRAP SORT	DIMENSIONS øD	øD5	øD6	L4	NET Wt.(kg)
01	4-V-P366-26781 / 93 130 620 4000	ASTM A105 CERTIFY NORMALISED	ø100X35	2.16	10	100	69	45	31	1.80
02	4-V-P560-26781 / 93 202 346 4000		ø100X35	2.16	10	100	75.5	51.5	31	1.80
03	4-V-NH50-26781/1 / 93 202 828 4000		ø125X35	3.4	10	125	87	65	34	3.2
04	4-V-NH55-26781/1 / 93 202 779 4000		ø125X35	3.4	10	125	83	59	34	3.2
05	4-V-NH60-26781 / 93 202 976 4000	ASTMA182 F91,CERTIFY	ø125X35	3.4	20	125	87	65	34	3.2
06	4-V-NJ35-26781 / 93 203 641 4000	ASTM A182 F91,CERTIFY	ø125X35	3.4	20	125	83	59	34	3.2
07	4-V-P763-26781 / 93 205 086 4000	ASTM A182 F316 SH,CERTIFY	ø100X35	2.16	46	100	75.5	51.5	31	1.80

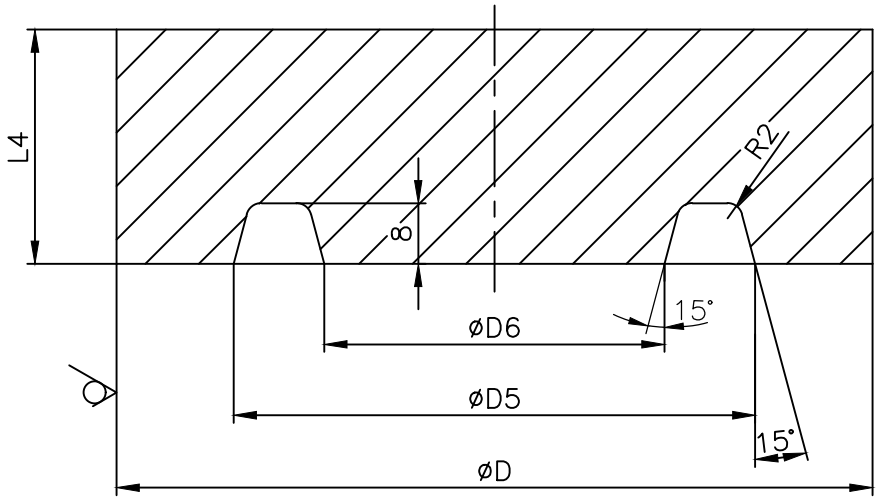

NOTE

01. BREAK ALL SHARP CORNERS.

NO OF	DESCRIPTION	MATL CODE	MATL SPECN	HEAT TREATMENT	SCRAP SORT	NET WT (kg)	GROSS WT (kg)	DRAWING No	ITEM No
–	–	–	–	–	–	–	–	–	–

BHARAT HEAVY ELECTRICALS LTD.,
UNIT: HIGH PRESSURE BOILER PLANT.
TIRUCHIRAPALLI 620014.
365-122

	NAME	SIGN	DATE	NO.OF VAR
DRN	K.KUMUTHA		19.05.09	
CHD	M.SRINIVASAN		19.05.09	
APPD	P.BOOMINATHAN		19.05.09	

DEPT	SCALE	WEIGHT (KG).	REFERENCE INFORMATIONS	NO. OF ITEMS
VL	NTS	REF.TABLE	CAD :C426781	
CODE 320				

TITLE	CARD CODE	DRAWING NO.	REV
BACK SEAT ROUGH	U 01	4-V-0000-26781	07

Size A4

ALL DIMENSIONS ARE IN MILLIMETRES.

FOR TOLERANCES OF UNTOLERANCED DIMENSIONS DURING MANUFACTURE REFER RELEVANT QCP/QP

REV	DATE	ALTERED	R.P.SINGH
07	27.12.19	CHD & APPD	SAMEER & SSK

SL. NO. 07 INCLUDED

6.3

CAUTION: The information on this document is the property of BHARAT HEAVY ELECTRICALS LTD. It must not be used directly or indirectly in any way detrimental to the interest of the company.

SL. No.	DRAWING No. / COMP.CODE	MATL.SPECN.	SUGGESTED MIN.SIZE	RAW MATL. Wt.(kg)	SCRAP SORT	DIMENSIONS øD	øD5	øD6	L4	NET Wt.(kg)
01	4-V-P366-26781 / 93 130 620 4000	ASTM A105 CERTIFY NORMALISED	ø100X35	2.16	10	100	69	45	31	1.80
02	4-V-P560-26781 / 93 202 346 4000		ø100X35	2.16	10	100	75.5	51.5	31	1.80
03	4-V-NH50-26781/1 / 93 202 828 4000		ø125X35	3.4	10	125	87	65	34	3.2
04	4-V-NH55-26781/1 / 93 202 779 4000		ø125X35	3.4	10	125	83	59	34	3.2
05	4-V-NH60-26781 / 93 202 976 4000	ASTMA182 F91,CERTIFY	ø125X35	3.4	20	125	87	65	34	3.2
06	4-V-NJ35-26781 / 93 203 641 4000	ASTM A182 F91,CERTIFY	ø125X35	3.4	20	125	83	59	34	3.2
07	4-V-P763-26781 / 93 205 086 4000	ASTM A182 F316 SH,CERTIFY	ø100X35	2.16	46	100	75.5	51.5	31	1.80

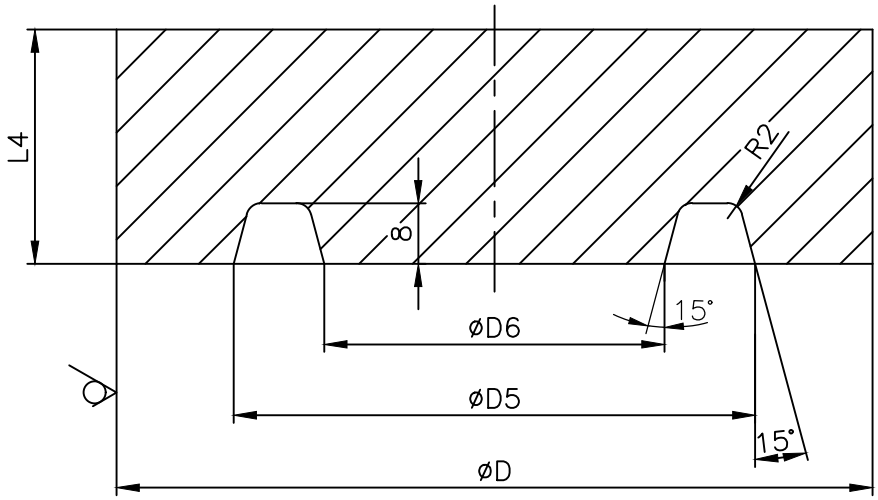

NOTE

01. BREAK ALL SHARP CORNERS.

NO OF	DESCRIPTION	MATL CODE	MATL SPECN	HEAT TREATMENT	SCRAP SORT	NET WT (kg)	GROSS WT (kg)	DRAWING No	ITEM No
–	–	–	–	–	–	–	–	–	–

BHARAT HEAVY ELECTRICALS LTD.,
UNIT: HIGH PRESSURE BOILER PLANT.
TIRUCHIRAPALLI 620014.
365-122

	NAME	SIGN	DATE	NO.OF VAR
DRN	K.KUMUTHA		19.05.09	
CHD	M.SRINIVASAN		19.05.09	
APPD	P.BOOMINATHAN		19.05.09	

DEPT	SCALE	WEIGHT (KG).	REFERENCE INFORMATIONS	NO. OF ITEMS
VL	NTS	REF.TABLE	CAD :C426781	
CODE 320				

TITLE	CARD CODE	DRAWING NO.	REV
BACK SEAT ROUGH	U 01	4-V-0000-26781	07

Size A4

FOR TOLERANCES OF UNTOLERANCED DIMENSIONS DURING MANUFACTURE REFER RELEVANT QCP/QR.

DRAWING NO. 3-V-0000-17058/04

ALL DIMENSIONS ARE IN MILLIMETRES

12.5 / 3.2 / 0.8

30–50 h11	0	−0.160
50–80 h11	0	−0.190

SL.	STEM SIZE.	DRAWING No.	COMP. CODE	RAW MATERIAL. SUGG. SIZE	SPECN.	CODE	SCRAP SORT	WT.	DIMENSIONS ØD1	ØD2	ØD3	H1	H2	NET WT(KG)	SIZE/RATING.
01	3/4"	3-V-N201-17058	93 104 667 0000	ø45X30	A276 Gr 410 H&T (CERTIFY)	–	40	0.37	40	32.5	19.5	20	8	0.10	2"/150 CL
02	7/8"	3-V-N202-17058	93 104 668 0000	ø53X27		–	40	0.47	48	35.7	22.7	17	5	0.15	3"/150&300 CL
03	1"	3-V-N203-17058	93 104 669 0000	ø55X27		–	40	0.5	50	38.9	25.9	17	5	0.16	4"/150 CL, 4"/300 CL
04	1 1/8"	3-V-N204-17058	93 104 670 0000	ø63X31		–	40	0.76	58	45.2	29.0	22	10	0.25	6"/150 CL
05	1 1/4"	3-V-N205-17058	93 104 671 0000	ø67X35		–	40	0.97	62	48.4	32.2	25	10	0.32	8"/150 CL
06	1 3/8"	3-V-N206-17058	93 104 672 0000	ø75X35		15 924 115	40	1.21	70	51.6	35.4	25	10	0.38	10"/150 CL
07	1 1/2"	3-V-N207-17058	93 104 785 0000	ø75X35		15 924 115	40	1.21	70	57.9	38.6	25	10	0.55	12"/150 CL
08	3/4"	3-V-N208-17058	93 104 978 0000	ø45X22		–	40	0.37	40	32.5	19.5	14	8	0.08	2"/300 CL
09	1 1/4"	3-V-N211-17058	93 104 979 0000	ø63X30		–	40	0.76	58	48.4	32.2	22	10	0.22	6"/300 CL
10	1 3/8"	3-V-N212-17058	93 104 980 0000	ø67X35		–	40	0.97	62	51.6	35.4	25	10	0.30	8"/300 CL
11	1 5/8"	3-V-N213-17058	93 104 981 0000	ø75X35		–	40	1.87	70	61.1	41.7	25	10	0.50	10"/300 CL
12	1 5/8"	3-V-N214-17058	93 104 982 0000	ø80X45		–	40	1.78	75	61.1	41.7	35	10	0.60	12"/300 CL
13	1 1/8"	3-V-N223-17058	93 105 008 0000	ø63X31	A182 F321 SOL. HEATTREATED CERTIFY	–	46	0.76	58	45.2	29.0	22	10	0.25	6"/150 CL
14	1"	3-V-M357-17058	93 105 300 0000	ø55X27	SA182 F304 SOLUTION HEAT TREATED CERTIFY	–	46	0.5	50	38.9	25.9	17	5	0.16	4"/150CL, 4"/300CL
15	1 1/4"	3-V-M358-17058	93105301 0000	ø63X30		–	46	0.76	58	48.4	32.2	22	10	0.22	6"/300CL
16	1 3/8"	3-V-M359-17058	93105302 0000	ø67X35		–	46	0.97	62	51.6	35.4	25	10	0.3	8"/300CL
17	1 1/4"	3-V-N243-17058	93105776 0000	ø67X35	ASTM SA182 GR-F316L-CERTIFY		4	0.97	62	48.4	32.2	25	10	0.32	8"/150CL

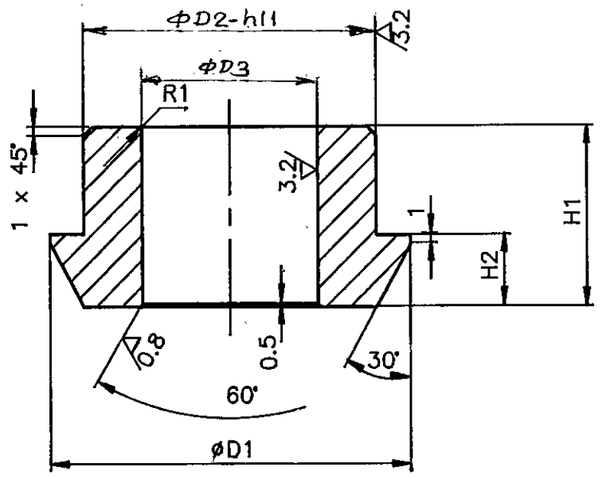

TOLERANCE FOR UNTOLERANCED DIMENSIONS	
UPTO 6 MM	= ± 0.1 MM
> 6 UPTO 120 MM	= ± 0.2 MM
MORE THAN 120 MM	= ± 0.5 MM
ANGULAR TOLERANCE	= ± 0.5 Deg.
CHAMFER	= ± 5 Deg.

REV	DATE	ALTD: N.D.PALI	REV	DATE	ALTERED: N.DHANAPAL	REV	DATE	ALTERED N.DHANAPAL
05	08.07.95	CHKD: APPD	04	21-10-94	CHECKED:	03	10-5-94	CHECKED
S.L.NO. 17 IS INCLUDED.			1. SL.NO. 14,15,16 INCLUDED			1. SL.NO. 13 ADDED		

CAUTION: The information on this document is the property of BHARAT HEAVY ELECTRICALS LTD. It must not be used directly or indirectly in any way detrimental to the interest of the company.

RETRACED WITH REVISION NO.2 ON 10·05·94

NO OFF	DESCRIPTION	MATL CODE	MATL SPECN	HEAT TREATMENT	SCRAP SORT	NET WT (kg)	GROSS WT (kg)	DRAWING No	ITEM No

TYPE OF PRODUCT
OR NAME OF
CUSTOMER/PROJECT

BHARAT HEAVY ELECTRICALS LTD.,
UNIT: HIGH PRESSURE BOILER PLANT.
TIRUCHIRAPALLI-620014.

	NAME	SIGN	DATE
DRN	T.R.R.MURTHY	T.R.R.	
CHD	N.DHANAPAL	N. Dhanapal	10/5/94
APPD	A.V.NATHAN		10/5/94

NO. OF VAR.

DEPT	GRADE OF UNTOL.DIM	SCALE	WEIGHT (KG).	REFERENCE INFORMATIONS	NO. OF ITEMS
VL	~~C / M / F~~	N.T.S	—	—	
CODE 320					

TITLE	CARD CODE	DRAWING NO.	REV
BACK SEAT BUSH	U 01	3-V-0000-17058	05

ALL DIMENSIONS ARE IN MILLIMETRES. FOR TOLERANCES OF UNTOLERANCED DIMENSIONS DURING MANUFACTURE REFER RELEVANT QCP / QP.

DRAWING NO. 3-V-0000-17562

SL. No.	DRAWING No.	COMPONENT CODE	RAW MATERIAL DETAILS				SCRAP SORT	DIMENSIONS								WT. IN Kgs.
			SUGG. SIZE	SPECN.	HEAT TREAT.	WT. (Kgs)		øD	øD1	øD2	ød1	ød2	ød3	H1	A1	
01.	3-V-F501-17562	93 166 862 5000	ø40 x 28	ASTM A105	NR	0.28	10	32.5	40.0	30.5	15.0	24.0	10.0	21.0	9.0	0.19
02.	3-V-F531-17562	93 166 863 5000	ø40 x 28	A182-F22	NT	0.28	20									
03.	3-V-F502-17562	93 166 864 5000	ø50 x 28	ASTM A105	NR	0.43	10	38.9	50.0	36.9	21.0	31.0	15.4	21.0	9.0	0.22
04.	3-V-F532-17562	93 166 865 5000	ø50 x 28	A182-F22	NT	0.43	20									
05.	3-V-F921-17562/01	93 203 194 5000	ø50 x 28	A182-F316	SH	0.43	46									
06.	3-V-F503-17562	93 166 866 5000	ø58 x 33	ASTM A105	NR	0.68	10	45.2	58.0	43.2	24.0	34.0	18.4	26.0	11.0	0.36
07.	3-V-F533-17562	93 166 867 5000	ø58 x 33	A182-F22	NT	0.68	20									
08.	3-V-F913-17562	93 203 984 5000	ø58 x 33	A182-F316	SH	0.68	46									
09.	3-V-F504-17562	93 166 868 5000	ø70 x 33	ASTM A105	NR	1.00	10	57.9	70.0	55.9	34.0	43.0	28.0	26.0	11.0	0.51
10.	3-V-F534-17562	93 166 869 5000	ø70 x 33	A182-F22	NT	1.00	20									
11.	3-V-F528-17562	93 204 008 5000	ø70 x 33	A182-F316	SH	1.00	46									
12.	3-V-F505-17562	93 166 870 5000	ø75 x 34	ASTM A105	NR	1.18	10	61.1	75.0	59.1	37.0	46.0	31.2	26.0	11.0	0.58
13.	3-V-F535-17562	93 166 871 5000	ø75 x 34	A182-F22	NT	1.18	20									
14.	3-V-F889-17562	93 202 267 5000	ø75 x 34	A182-F316	SH	1.18	46									
15.	3-V-F506-17562	93 166 872 5000	ø80 x 34	ASTM A105	NR	1.34	10	67.5	80.0	65.5	43.0	53.0	37.5	26.0	11.0	0.62
16.	3-V-F536-17562	93 166 873 5000	ø80 x 34	A182-F22	NT	1.34	20									
17.	3-V-U556-17562	93 203 863 5000	ø80 x 34	A182-F316	SH	1.34	46									
18.	3-V-F507-17562	93 166 874 5000	ø85 x 44	ASTM A105	NR	1.96	10	73.8	85.0	71.8	47.0	56.0	41.0	36.0	13.0	0.97
19.	3-V-F537-17562	93 166 875 5000	ø85 x 44	A182-F22	NT	1.96	20									
20.	3-V-F510-17562	93 201 591 5000	ø85 x 44	A182-F316	SH	1.96	46									
21.	3-V-NJ74-17562	93 204 048 5000	ø120 x 42	A182-F22	NT	3.73	20	96.0	118.5	93.0	69.0	75.0	50.0	31.0	11.0	1.50

6.3 / 3.2

FROM	TO	h8
30.0	50.0	0 / −0.039
50.0	80.0	0 / −0.046

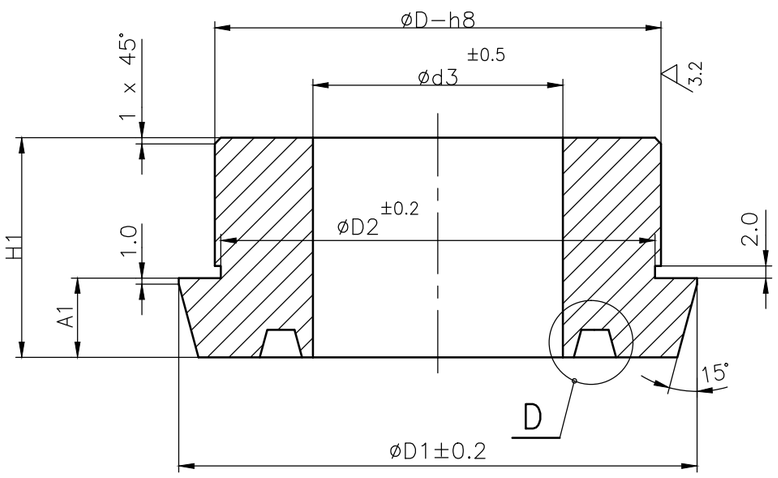

DETAIL − D

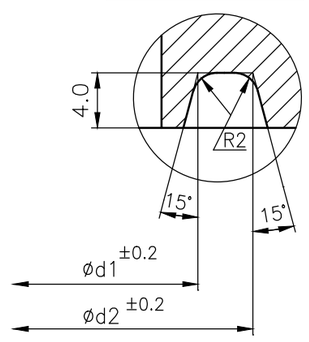

–	–	–	–	–	–	–	–	–	–
NO OFF	DESCRIPTION	MATL CODE	MATL SPECN	HEAT TREATMENT	SCRAP SORT	NET WT (kg)	GROSS WT (kg)	DRAWING No	ITEM No

TYPE OF PRODUCT OR NAME OF CUSTOMER/PROJECT: CS

DRAWING REDRAWN WITH REV. 03 ON 27.09.2013

BHARAT HEAVY ELECTRICALS LTD.
UNIT: HIGH PRESSURE BOILER PLANT.
TIRUCHIRAPALLI − 620014.
365-121

	NAME	SIGN	DATE	NO.OF VAR.
DRN	M.SRINIVASAN		30.05.96	
CHD	R.MOHAN		30.05.96	
APPD	N.NAGARAJAN		30.05.96	

DEPT: VL
CODE: 320
SCALE: NTS
WEIGHT (KG): REF.
REFERENCE INFORMATIONS: CAD :F317562
NO. OF ITEMS

TITLE: BACK SEAT S/F
CARD CODE: U 01
DRAWING NO.: 3-V-0000-17562
REV: 07

REV	DATE	ALTERED	
07	17.06.16	K.NAVIN	CHD & APPD MS & SSK

DRG.No. 3-V-NJ74-17562 INCLUDED

REV	DATE	ALTERED	
06	31.03.16	A.AMALA	CHD & APPD MS & SSK

DRG.No. 3-V-F913-17562 & 3-V-F528-17562 INCLUDED

CAUTION: The information on this document is the property of BHARAT HEAVY ELECTRICALS LTD. It must not be used directly or indirectly in any way detrimental to the interest of the company.

Size A3

ALL DIMENSIONS ARE IN MILLIMETRES. FOR TOLERANCES OF UNTOLERANCED DIMENSIONS DURING MANUFACTURE REFER RELEVANT QCP / QP.

DRAWING NO. 3-V-0000-23292/01

SL. No.	DRAWING No.	COMPONENT CODE	RAW MATERIAL DETAILS				SCRAP SORT	DIMENSIONS										WT. IN Kgs.
			SUGG. SIZE	SPECN.	HEAT TREAT.	WT. (Kgs)		ØD	ØD1	ØD2	Ød1	Ød2	Ød3	H1	A1			
01.	3-V-F602-23292	93 108 844 5000	ø50 x 30	ASTM A276 410--CERTIFY	HT	0.46	40	38.9	50.0	36.9	21.0	31.0	15.4	21.0	9.0			0.22
02.	3-V--F603-23292	93 108 845 5000	ø60 x 40	ASTM A276 410-CERTIFY	HT	0.90	40	45.2	58.0	43.2	24.0	34.0	18.4	26.0	11.0			0.36
03.	3-V-F604-23292	93 108 846 5000	ø75 x 40	ASTM A276 410-CERTIFY	HT	1.40	40	57.9	70.0	55.9	34.0	43.0	28.0	26.0	11.0			0.51
04.	3-V-F605-23292	93 108 847 5000	ø80 x 40	ASTM A276 410-CERTIFY	HT	1.60	40	61.1	75.0	59.1	37.0	46.0	31.2	26.0	11.0			0.58
05.	3-V-F606-23292	93 108 848 5000	ø100 x 40	ASTM A276 410-CERTIFY	HT	2.50	40	67.5	80.0	65.5	43.0	53.0	37.5	26.0	11.0			0.62
06.	3-V-F607-23292	93 108 849 5000	ø100 x 50	ASTM A276 410-CERTIFY	HT	3.10	40	73.8	85.0	71.8	47.0	56.0	41.0	36.0	13.0			0.97

FROM	TO	h8
30.0	50.0	0 −0.039
50.0	80.0	0 −0.046

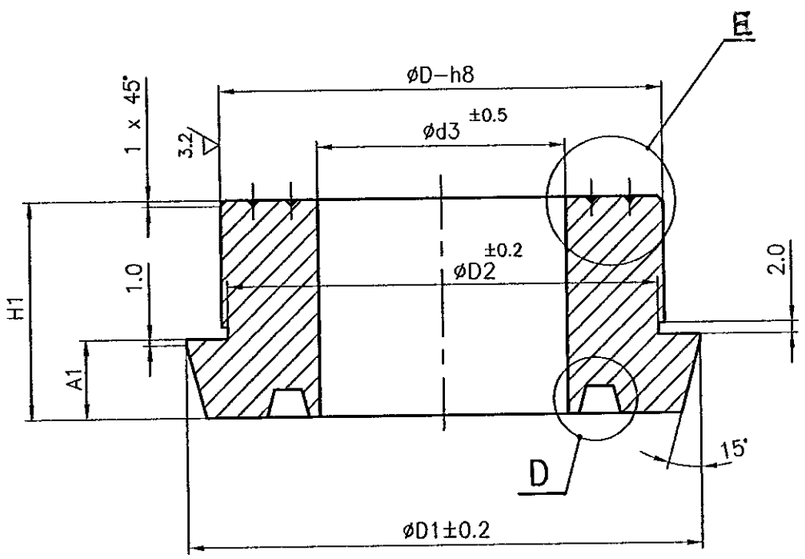

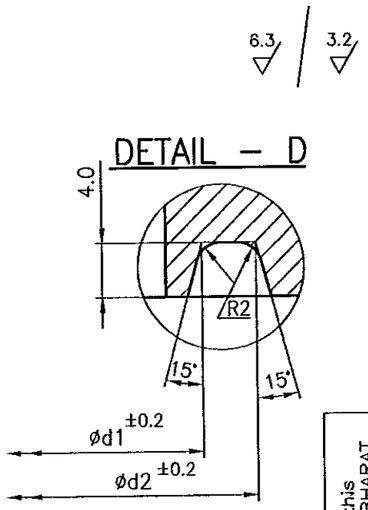

DETAIL - E

(MATERIAL IDENTIFICATION MARK FOR '410' MATL.)

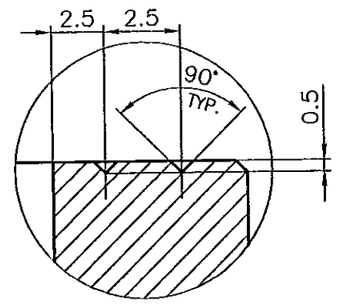

DRAWING RETRACED WITH REV.01 ON 05.11.98

NO OFF	DESCRIPTION	MATL CODE	MATL SPECN	HEAT TREATMENT	SCRAP SORT	NET WT (kg)	GROSS WT (kg)	DRAWING No	ITEM No
–	–	–	–	–	–	–	–	–	–

TYPE OF PRODUCT
OR NAME OF
CUSTOMER/PROJECT

(X01)

BHARAT HEAVY ELECTRICALS LTD.,
UNIT: HIGH PRESSURE BOILER PLANT.
TIRUCHIRAPALLI-620014.
365-121

	NAME	SIGN	DATE	NO.OF VAR.
DRN	M.SRINIVASAN		5.11.98	
CHD	K.S.RAMAN		5.11.98	
APPD	N.NAGARAJAN		5.11.98	

DEPT	SCALE	WEIGHT (KG).	REFERENCE INFORMATIONS	NO. OF ITEMS
VL	NTS	REF.	410 + STELLITE CAD :C323292	

CODE	TITLE	CARD CODE	DRAWING NO.	REV
320	BACK SEAT S/F	U 01	3-V-0000-23292	01

Size A3

REV	DATE	ALTERED
01	05.11.98	CHD & APPD

DCN:CS:0925

DRAWING Nos.
3.V.F602.23292 WAS 3.V.F502.23292
3.V.F603.23292 WAS 3.V.F503.23292
3.V.F604.23292 WAS 3.V.F504.23292
3.V.F605.23292 WAS 3.V.F505.23292
3.V.F606.23292 WAS 3.V.F506.23292
3.V.F607.23292 WAS 3.V.F507.23292

CAUTION: The information on this document is the property of BHARAT HEAVY ELECTRICALS LTD. It must not be used directly or indirectly in any way detrimental to the interest of the company.

ALL DIMENSIONS ARE IN MILLIMETRES. FOR TOLERANCES OF UNTOLERANCED DIMENSIONS DURING MANUFACTURE REFER RELEVANT QCP / QP.

DRAWING NO. 3-V-0000-95511

SL. No.	DRAWING No.	COMP.CODE	RAWMATL. DETAILS				DIMENSIONS							NET Wt. (Kg)	APPLICABLE TYPE
			MATL.SPECN.	SUGG.SIZE	SCRAP SORT	Wt. (Kg)	øD	øD1	øD2	øD3	øD4	H1	H2		
01	3-V-2479-95511	93 106 512 4000	SA 105 NORMALISED CERTIFY	ø60X35	10	0.78	54	44	15	37.5	22.5	26	8	0.23	3" & 4"-300C SV RV
02	3-V-2480-95511	93 106 513 4000		ø70X45	10	1.35	62	52	19	45.5	30.5	36	10	0.32	6"-300C SV RV
03	3-V-2670-95511	93 106 514 4000		ø80X53	10	2.10	74	64	23	53.5	38.5	44	12	0.61	8"-300C SV RV
04	3-V-U251-95511	93 130 270 4000	A182-F316 SH,CERTIFY	ø70X45	46	1.35	62	52	19	45.5	30.5	36	10	0.32	6"-300C SV RV
05	3-V-U377-95511	93 201 089 4000		ø60X35	46	0.78	54	44	15	37.5	22.5	26	8	0.23	3" & 4"-300C SV RV

12.5 / 3.2

ø18-ø30 h11	+0.13
	0
ø30-ø50 h11	0
	-0.160
ø50-ø80 h11	0
	-0.190

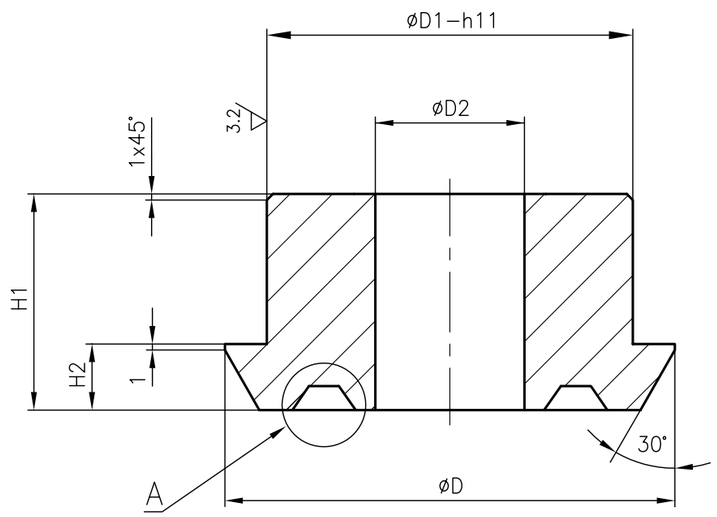

DETAIL-A

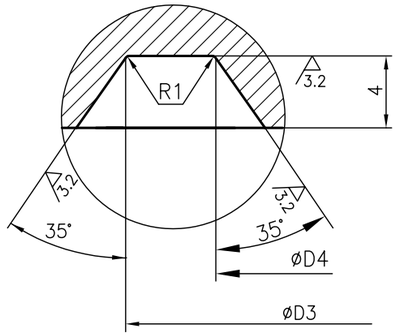

NO OFF	DESCRIPTION	MATL CODE	MATL SPECN	HEAT TREATMENT	SCRAP SORT	NET WT (kg)	GROSS WT (kg)	DRAWING No	ITEM No

TYPE OF PRODUCT OR NAME OF CUSTOMER/PROJECT: CS

DRG.REDRAWN WITH REV.03 ON 03.04.2007 (REFER DCN. CS: 0623)

BHARAT HEAVY ELECTRICALS LTD.
UNIT: HIGH PRESSURE BOILER PLANT.
TIRUCHIRAPALLI 620014.
365-121

	NAME	SIGN	DATE	NO.OF VAR.
DRN	A.S.PANDY		03.04.07	
CHD	T.R.RAMAMURTHY		03.04.07	
APPD	P.BOOMINATHAN		03.04.07	

DEPT: VL
CODE: 320
SCALE: NTS.
WEIGHT (KG).
REFERENCE INFORMATIONS: CAD:C395511
NO. OF ITEMS

TITLE: BACK SEAT (ROUGH)
CARD CODE: U 01
DRAWING NO. 3-V-0000-95511
REV 03

REV	DATE	ALTERED	
03	03.04.07	CHD & APPD	T.R.RAMAMURTHY / P.BOOMINATHAN

SL. NUMBER 05 INCLUDED.

CAUTION: The information on this document is the property of BHARAT HEAVY ELECTRICALS LTD. It must not be used directly or indirectly in any way detrimental to the interest of the company.

Size A3

ALL DIMENSIONS ARE IN MILLIMETRES. FOR TOLERANCES OF UNTOLERANCED DIMENSIONS DURING MANUFACTURE REFER RELEVANT QCP / QP.

DRAWING NO. 3-V-0000-17059

12.5 / 3.2

SL. No.	DRAWING No.	COMP.CODE	MATL. SPECN.	SUGG.SIZE	SCRAP SORT	CROSS WT (kg)	NET WT (kg)	DIMENSIONS ØD1a11	ØD	ØD2	H	h	Ød	APPLICABLE TYPE
01	3-V-N201-17059	93 104 661 0000	A276 Gr.410, H&T,CERTIFY	ø43X25	40	0.285	0.09	32.5	38	22	21	15	19.35	2"/300C
02	3-V-N202-17059	93 104 662 0000		ø45X26		0.32	0.16	35.7	40	26	22	16	22.5	3"/150&300C
03	3-V-N203-17059	93 104 663 0000		ø50X30		0.46	0.19	38.9	48	28	26	20	25.7	4"/150&300C
04	3-V-N204-17059	93 104 664 0000		ø56X30		0.58	0.23	45.2	54	34	26	20	28.87	6"/150C
05	3-V-N205-17059	93 104 665 0000		ø63X30		0.73	0.26	48.4	58	38	26	20	32.05	8"/150C
06	3-V-N206-17059	93 104 666 0000		ø70X36		1.09	0.45	51.6	66	42	32	25	35.22	10"/150C
07	3-V-N207-17059	93 104 787 0000		ø70X36		1.09	0.53	57.9	66	42	32	25	38.60	12"/150C
08	3-V-N223-17059	93 105 013 0000	A182 F321,SH, CERTIFY	ø56X30	46	0.58	0.23	45.2	54	34	26	20	28.87	6"/150C
09	3-V-C329-17059	93 105 097 0000	A276 Gr410, H&T,CERTIFY	ø60X30	40	0.666	0.29	48.4	54	34	26	20	32.05	4"/900C
10	3-V-N277-17059	93 105 771 0000	SA 479- TYPE 304,SH, CERTIFY	ø43X25	46	0.285	0.09	32.5	38	22	21	15	19.35	2"/300C
11	3-V-N286-17059	93 105 772 0000		ø45X26		0.32	0.16	35.7	40	26	22	16	22.5	3"/150&300C
12	3-V-N285-17059	93 105 773 0000		ø50X30		0.46	0.19	38.9	48	28	26	20	25.7	4"/150&300C
13	3-V-N284-17059	93 105 774 0000		ø56X30		0.58	0.23	45.2	54	34			28.87	6"/150C
14	3-V-N243-17059	93 105 775 0000		ø63X30		0.73	0.26	48.4	58	38			32.05	8"/150C
15	3-V-N230-17059	93 105 931 0000	A276 Gr 410,HT, CERTIFY	ø63X30	40	0.73	0.30	51.6	58				35.22	8"/300C
16	3-V-N304-17059	93 105 932 0000		ø70X36		1.09	0.41	61.1	66	45	32	25	41.77	10"/300C
17	3-V-N309-17059	93 105 933 0000		ø75X36		1.25	0.5	61.1	70	45			41.77	12"/300C
18	3-V-N472-17059	93 107 964 0000	SA 479-TYPE 304,SH, CERTIFY	ø43X20	46	0.228	0.08	32.5	38	22	15	9	19.35	2"/150C
19	3-V-N298-17059	93 107 980 0000	A276 Gr410,H&T,CERTIFY	ø43X20	40	0.228	0.08	32.5	38	22	15	9	19.35	2"/150C
20	3-V-N688-17059	93 108 342 0000	SA182 F316,SH, CERTIFY	ø60X30	46	0.666	0.29	48.4	54	34	26	20	32.05	6"/300C
21	3-V-N685-17059	93 108 343 0000		ø70X36		1.09	0.45	51.6	66	42	32	25	35.22	10"/150C
22	3-V-N686-17059	93 108 344 0000		ø70X36		1.09	0.53	57.9	66	42	32	25	38.6	12"/150C
23	3-V-K963-17059	93 109 212 0000		ø75X36		1.25	0.50	61.1	70	45	32	25	41.77	14"/150C
24	3-V-K964-17059	93 109 213 0000		ø75X36		1.25	0.45	64.3	72	48.5	32	25	45.0	16"/150C
25	3-V-K966-17059	93 109 214 0000		ø90x55		2.75	1.22	83.3	90	62	50	40	57.7	24"/150C
26	3-V-N498-17059	93 109 584 0000		ø63X30		0.73	0.30	51.6	58	38	26	20	35.22	8"/300C
27	3-V-N231-17059	93 109 766 0000	A276 Gr 410, H&T,CERTIFY	ø80X40	40	1.6	0.67	73.8	80	54	32	25	51.3	20"/150C
28	3-V-N944-17059	93 109 767 0000		ø90X55		2.75	1.22	83.3	90	62	50	40	57.7	24"/150C
29	3-V-U015-17059	93 109 871 0000	A182 F316,SH, CERTIFY	ø80X40	46	1.6	0.49	67.5	80	54	32	25	48.1	18"/150C
30	3-V-N754-17059	93 110 500 0000	A276 -410, H&T,CERTIFY	ø80X40	40	1.6	0.45	64.3	72	48.5	32	25	45	16"/150C
31	3-V-N722-17059	93 110 502 0000		ø80X40	40	1.6	0.49	67.5	80	54	32	25	48.1	18"/150C
32	3-V-NE67-17059	93 201 074 0000	A182 F316,SH, CERTIFY	ø70X36	46	1.09	0.41	61.1	66	45	32	25	41.77	10"/300C

ØD1	a11
>ø18 TO ≤ ø30	-0.300
	-0.430
>ø30 TO ≤ ø40	-0.310
	-0.470
>ø40 TO ≤ ø50	-0.320
	-0.480
>ø50 TO ≤ ø65	-0.340
	-0.530
>ø65 TO ≤ ø80	-0.360
	-0.550
>ø80TO ≤ ø100	-0.380
	-0.600

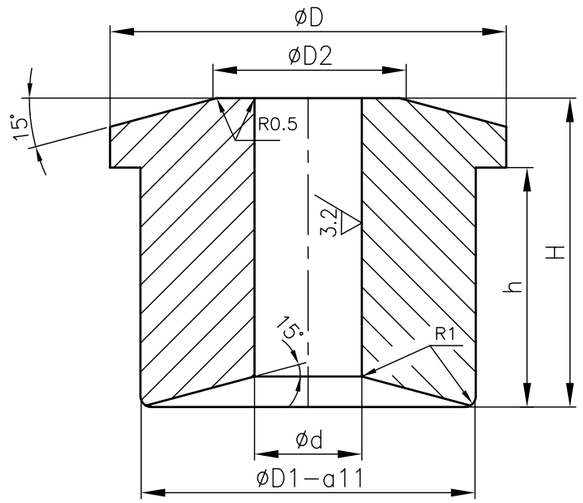

REV	DATE	ALTERED T.R.RAMAMURTHY
13	13.03.07	CHD & APPD P.BOOMINATHAN

SL. No.32 INCLUDED.

CAUTION: The information on this document is the property of BHARAT HEAVY ELECTRICALS LTD. It must not be used directly or indirectly in any way detrimental to the interest of the company.

NO OFF	DESCRIPTION	MATL CODE	MATL SPECN	HEAT TREATMENT	SCRAP SORT	NET WT (kg)	GROSS WT (kg)	DRAWING No	ITEM No

TYPE OF PRODUCT OR NAME OF CUSTOMER/PROJECT

DRAWING REDRAWN WITH REV.13 ON 13.03.2007

BHARAT HEAVY ELECTRICALS LTD.
UNIT: HIGH PRESSURE BOILER PLANT.
TIRUCHIRAPALLI 620014.
365-121

	NAME	SIGN	DATE	NO.OF VAR.
DRN	V.BAIRAVAN		13.03.07	
CHD	R.L.NARAYANAN		13.03.07	
APPD	P.LOGANATHAN		13.03.07	

DEPT VL
CODE 320
SCALE NTS.
WEIGHT (KG). —
REFERENCE INFORMATIONS CAD:C317059
NO. OF ITEMS

TITLE GLAND FOLLOWER
CARD CODE U 01
DRAWING NO. 3-V-0000-17059
REV 13

Size A3

ALL DIMENSIONS ARE IN MILLIMETRES. FOR TOLERANCES OF UNTOLERANCED DIMENSIONS DURING MANUFACTURE REFER RELEVANT QCP / QP.

DRAWING NO. 3-V-0000-17675

SL. No.	DRAWING No.	COMP. CODE	RAW MATERIAL DETAILS				DIMENSIONS						SCRAP SORT	WEIGHT (Kgs)	REMARKS
			MATL.SPECN.	HEAT TREAT.	SUGG. SIZE	GROSS WT.	øDS	øD	øD1	H	h	ød			
01.	3.V.F532.17675	931670990000	ASTM A276 410 CERTIFY	N & T	ø50x30	0.46	38.9	48.0	28.0	26.0	20.0	25.9	40	0.19	3"-C600
02.	3.V.F533.17675	931671010000	ASTM A276 410 CERTIFY	N & T	ø56x30	0.58	45.2	54.0	31.0	26.0	20.0	29.1	40	0.23	4"-C600
03.	3.V.F913.17675	932039850000	ASTM A182 F316 CERTIFY	SH									46		
04.	3.V.F534.17675	931671030000	ASTM A276 410 CERTIFY	N & T	ø68x35	1.00	57.9	66.0	41.0	32.0	25.0	38.6	40	0.53	6"-C600
05.	3.V.F535.17675	931671050000	ASTM A276 410 CERTIFY	N & T	ø72x35	1.12	61.1	70.0	44.0	32.0	25.0	41.8	40	0.50	8"-C600
06.	3.V.F889.17675	932022680000	ASTM A182 F316 CERTIFY	SH									46		
07.	3.V.F536.17675	931671070000	ASTM A276 410 CERTIFY	N & T	ø82x42	1.74	67.5	80.0	50.0	38.0	25.0	48.1	40	0.67	10"-C600
08.	3.V.F537.17675	931671090000	ASTM A276 410 CERTIFY	N & T	ø82x40	1.67	73.8	80.0	54.0	36.0	25.0	51.3	40	0.71	12"-C600
09.	3.V.E474.17675	931302270000	ASTM A276 410 CERTIFY	N & T	ø68x35	1.00	38.9	66.0	41.0	32.0	25.0	23.6	40	0.53	4"-C150
10.	3.V.P366.17675	931096880000	ASTM A276 410 CERTIFY	N & T	ø85x50	2.23	77.1	83.0	60.5	41.5	30.0	55.6	40	0.70	10"-C300
11.	3.V.F510.17675	932015920000	ASTM A182 F316 CERTIFY	SH	ø82x40	1.67	73.8	80.0	54.0	36.0	25.0	51.3	46	0.71	12"-C600-CF8
12.	3.V.P545.17675	932017890000	ASTM A182 F316 CERTIFY	SH	ø85x50	2.23	77.1	83.0	60.5	41.5	30.0	55.6	46	0.70	10"-C300
13.	3.V.P560.17675	932023490000	ASTM A276 410 CERTIFY	N & T	ø107x62	4.38	87	105	67.4	55.0	37.5	62.5	40	1.5	12"-C300
14.	3.V.P538.17675	932016110000	ASTM A276 410 CERTIFY	N & T	ø105x55	3.7	96	105	75	50	38	70.6	40	1.4	12"-C600-SV
15.	3.V.P582.17675	932033530000	ASTM A182 F316 CERTIFY	SH	ø107x62	4.38	87	105	67.4	55.0	37.5	62.5	46	1.5	12"-C300 RV

ø30 – ø40	a11	-0.310
		-0.470
ø40 – ø50		-0.320
		-0.480
ø50 – ø65		-0.340
		-0.530
ø65 – ø80		-0.360
		-0.550
ø80 -ø100		-0.380
		-0.590

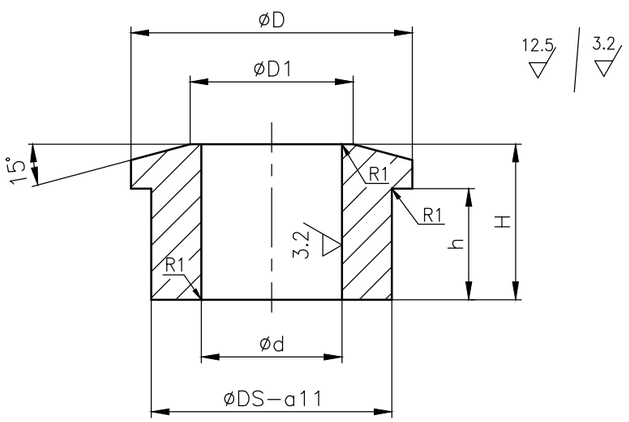

NOTE

01. BREAK ALL SHARP CORNERS.

NO OF	DESCRIPTION	MATL CODE	MATL SPECN	HEAT TREATMENT	SCRAP SORT	NET WT (kg)	GROSS WT (kg)	DRAWING No	ITEM No
–	–	–	–	–	–	–	–	–	–

TYPE OF PRODUCT
OR NAME OF
CUSTOMER/PROJECT

BHARAT HEAVY ELECTRICALS LTD.,
UNIT: HIGH PRESSURE BOILER PLANT.
TIRUCHIRAPALLI-620014.
365-121

	NAME	SIGN	DATE	NO.OF VAR.
DRN	K.P.LEON		29.05.04	
CHD	P.BOOMINATHAN		29.05.04	
APPD	K.S.RAMAN		29.05.04	

DEPT	SCALE	WEIGHT (KG).	REFERENCE INFORMATIONS	NO. OF ITEMS
VL	NTS	REF TABLE	CAD :C317675	
CODE 320				

TITLE	CARD CODE	DRAWING NO.	REV
GLAND FOLLOWER	U 01	3-V-0000-17675	10

REV	DATE	ALTERED	JENIS
10	02.05.16	CHD & APPD	MS & SSK

DRAWING No. 3.V.F913.17675 INCLUDED.

REV	DATE	ALTERED	MARIMUTHU
09	18.10.14	CHD & APPD	MS & SSK

DRAWING No. 3.V.P582.17675 INCLUDED.

CAUTION: The information on this document is the property of BHARAT HEAVY ELECTRICALS LTD. It must not be used directly or indirectly in any way detrimental to the interest of the company.

Size A3

FOR TOLERANCES OF UNTOLERANCED DIMENSIONS DURING MANUFACTURE REFER RELEVANT QCP/QP

DRAWING NO. 3-V-0000-17308

(10)

ALL DIMENSIONS ARE IN MILLIMETRES

12.5 / 3.2

SL NO.	DRG.NO.	COMP.CODE	MATL SPECN	SUGG. SIZE	GROSS WT(kg)	SCRAP SORT	DIMENSIONS ØDS	ØD	ØD1	H	h	Ød	NET WT (kg)	VALVE TYPE
01	3-V-M357-17308	931052770000	ASTM A182 F304 SH (CERTIFY)	Ø50 X 30	0.46	40	38.9	48	28	26	20	25.7	0.19	4"-C300 GV
02	3-V-M358-17308	931052780000		Ø56 X 30	0.73		48.4	54	34	26	20	32.05	0.29	6"-C300 GV
03	3-V-M359-17308	931052790000		Ø60 X 30	0.73		51.6	58	38	26	20	35.22	0.3	8"-C300 GV

Ø30-40	a11	-0.310 -0.470
Ø40-50		-.320 -.480
Ø50-65		-.340 -.530

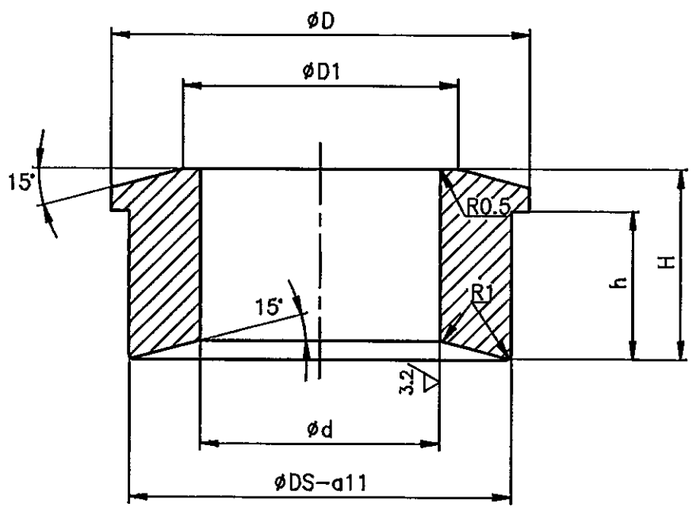

TOLERANCE FOR UNTOLERANCED DIMENSIONS	
UPTO 6 MM	= ± 0.1 MM
> 6 UPTO 120 MM	= ± 0.2 MM
MORE THAN 120 MM	= ± 0.5 MM
ANGULAR TOLERANCE	= ± 0.5 Deg.
CHAMFER	= ± 5 Deg.

REV	DATE	ALTERED
		CHECKED

CAUTION: The information on this document is the property of BHARAT HEAVY ELECTRICALS LTD. It must not be used directly or indirectly in any way detrimental to the interest of the company.

NO OFF	DESCRIPTION	MATL CODE	MATL SPECN	HEAT TREATMENT	SCRAP SORT	NET WT (kg)	GROSS WT (kg)	DRAWING No	ITEM No

TYPE OF PRODUCT
OR NAME OF
CUSTOMER/PROJECT

BHARAT HEAVY ELECTRICALS LTD.
UNIT: HIGH PRESSURE BOILER PLANT.
TIRUCHIRAPALLI-620014.

	NAME	SIGN	DATE	NO.OF VAR.
DRN	M.P.SELVAKUMAR		10/10/94	
CHD	N.DHANAPAL		10/10/94	
APPD	A.VISWANATHAN		10/10/94	

DEPT	GRADE OF UNTOL.DIM	SCALE	WEIGHT (KG).	REFERENCE INFORMATIONS	NO. OF ITEMS
VL	C / M / F	NTS	REFER TABLE	CAD:C317307	
CODE 320					

TITLE	CARD CODE	DRAWING NO.	REV
GLAND FOLLOWER	U 01	3-V-0000-17308	00

13/12

Size A3

DRAWING NO. 3-V-0000-03689

ALL DIMENSIONS ARE IN MILLIMETRES

12.5 / 3.2

SL NO.	DRG.NO.	COMP.CODE	MATL SPECN	SUGG. SIZE	GROSS WT(kg)	SCRAP SORT	DIMENSIONS øDS	øD	øD1	H	h	ød	NET WT (kg)	VALVE TYPE
01	3-V-2476-03689/01	930583960000	ASME SA479 TYPE 304 ANNEALED CERTIFY	ø50 X 30	0.46	46	40	46	26	26	20	24.3	0.18	1.5"-C300 SV
02	3-V-2478-03689/01	930583690000		ø50 X 30	0.46	46	44	50	30	26	20	28.3	0.20	3"-C300 SV
03	3-V-2480-03689/01	930590320000		ø63 X 30	0.73	46	52	58	38	26	20	36.5	0.25	6"-C300 SV
04	3-V-2670-03689/01	931002560000		ø75 X 50	1.73	46	64	70	46	32	25	44.5	0.44	8"-C300 SV
05	3-V-P266-03689	931045410000	SA276 TYPE410 NT CERTIFY	ø50 X 30	0.46	40	44	50	30	26	20	28.3	0.20	4"-C300 RV
06	3-V-2887-03689	931088990000		ø63X30	0.73		52	58	38			36.5	0.25	6"-C300 RV
07	3-V-2899-03689	931089000000		ø75X50	1.73		64	70	46	32	25	44.5	0.44	8"-C300 RV

ø30-40	a11	-0.310 -0.470
ø40-50		-.320 -.480
ø50-65		-.340 -.530

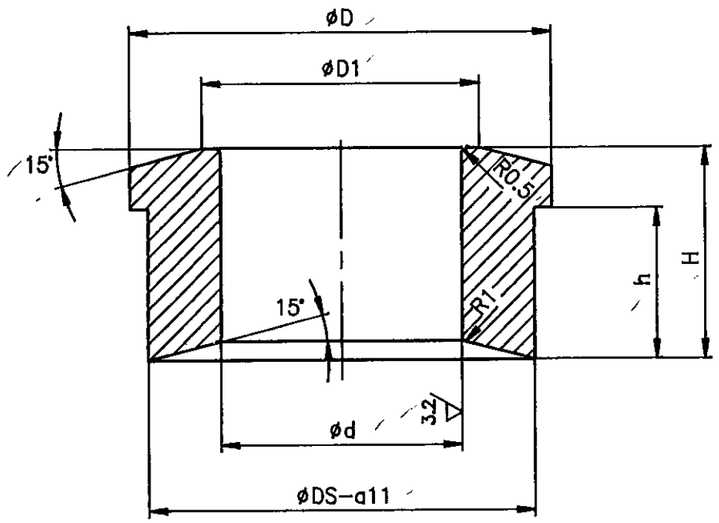

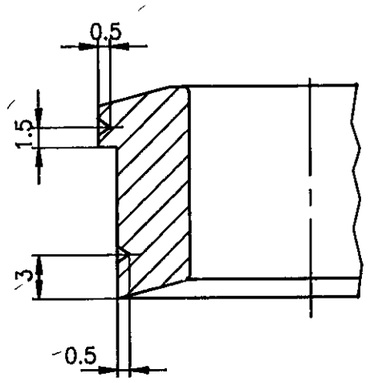

IDENTIFICATION FOR A276 TYPE410

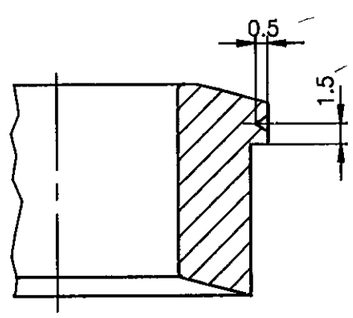

IDENTIFICATION FOR A479 TYPE304

NOTES:-

1. HARDNESS 230 BHN FOR SA276 TYPE410
2. HARDNESS 160 BHN FOR SA479 TYPE304

DRAWING RETRACED WITH 02 REVISION ON 12-01-95

NO OFF	DESCRIPTION	MATL CODE	MATL SPECN	HEAT TREATMENT	SCRAP SORT	NET WT (kg)	GROSS WT (kg)	DRAWING No	ITEM No
—	—	—	—	—	—	—	—		—

TYPE OF PRODUCT
OR NAME OF
CUSTOMER/PROJECT

BHARAT HEAVY ELECTRICALS LTD.,
UNIT: HIGH PRESSURE BOILER PLANT.
TIRUCHIRAPALLI-620014.

	NAME	SIGN	DATE
DRN	T.R.RAMAMURTHY		12.01.95
CHD	N.DHANAPAL		13/01/95
APPD	A.VISWANATHAN		19.1.95

NO. OF VAR.

DEPT	GRADE OF UNTOL. DIM	SCALE	WEIGHT (KG).	REFERENCE INFORMATIONS
VL		NTS	REFER TABLE	CAD:C306882
CODE 320	G / M / F			

NO. OF ITEMS

TITLE: GLAND FOLLOWER

CARD CODE: U 01

DRAWING NO. 3-V-0000-03689

REV 03

Size A3

TOLERANCE FOR UNTOLERANCED DIMENSIONS

UPTO 6 MM	= ± 0.1 MM
> 6 UPTO 120 MM	= ± 0.2 MM
MORE THAN 120 MM	= ± 0.5 MM
ANGULAR TOLERANCE	= ± 0.5 Deg.
CHAMFER	= ± 5 Deg.

CAUTION: The information on this document is the property of BHARAT HEAVY ELECTRICALS LTD. It must not be used directly or indirectly in any way detrimental to the interest of the company.

REV	DATE	ALTD: N.D.PAL	REV	DATE	ALTERED
04	16.06.98	CHK&APP:	03	14.01.95	CHECKED

1. SL.NO. 6 AND 7 ARE INCLUDED.

1. REFER DCN. No.CS: 0441
2. DRG MODIFIED AND CORRECT MATL SPECIFIED.

TP-DG-2-V-0000-01815
CORPORATE DRG ID

FIRST ANGLE PROJECTION (ALL DIMENSIONS IN MILLIMETRES)

NOMINAL SIZE OF STEM	REVISED DRG. NO.	OLD DRG. NO.	MATL. SPECIFICATION	RAW MATL. SIZE	MATL. CODE NO.	IDENTIFICATION MARK STYLE	DIMENSIONS ØDS	ØD	ØD1	H	h	Ød		WEIGHT (KG.) GROSS	NET
10	2.V.2366.01815	4.V.2366.3385	SA 105	Ø25×16	15039139	–	20	25	12	13	10	10.3		0.06	0.036
12	2.V.1396.01815	4.V.1396.3156/1	SA 105	Ø25×16	15039139	–	22	25	14	13	10	12.3		0.06	0.04
	2.V.2372.01815/1	4.V.2372.3510	A182 F316L	Ø50×16	15024228	C								0.25	
	2.V.2453.01815/1	4.V.2453.3904	ASTM A182-F6	Ø25×16	15024255	B									
	2.V.2465.01815/1	4.V.2465.3981	AISI 304	Ø25×16	15024111	A								0.06	
14	2.V.2253.01815	4.V.2253.3188/1	SA 105	Ø32×22	15039140	–	26	32	16	18	12	14.3		0.14	0.07
	2.V.2454.01815/1	4.V.2454.3924	ASTM A182-F6	Ø32×22	15024257	B									
	2.V.2466.01815/1	4.V.2466.3989	AISI 304	Ø32×22	15024194	A									
16	2.V.1401.01815	4.V.1401.3212/1	SA 105	Ø36×22	15039280	–	28	34	18	18	12	16.3		0.18	0.08
	2.V.2455.01815/1	4.V.2455.3919	ASTM A182-F6	Ø36×22	15024258	B									
	2.V.2467.01815/1	4.V.2467.3996	AISI 304	Ø40×22	15024326	A								0.22	
	(a) 2.V.2599.01815/1	–	A182 F316L	Ø50×22	15024228	C								0.34	
20	2.V.1370.01815	4.V.1370.3305/2	SA 105	Ø40×25	15039141	–	32	38	22	21	15	20.3		0.25	0.09
	2.V.2373.01815/1	4.V.2373.3511	A182 F316L	Ø50×25	15024228	C								0.39	
	2.V.2456.01815/1	4.V.2456.3942	ASTM A182-F6	Ø40×25	15024259	B								0.25	
	★ 2.V.1455.01815/1	4.V.1455.3813/1	ASTM A182 F304	Ø40×25	15024326	A								0.29	
	12 2.V.C341.01815	–	ASTM SA 276-T410	Ø40×25	–	D									
22	2.V.0205.01815	4.V.0205.03356/1	SA 105	Ø40×25	15039141	–	34	40	24	21	15	22.3		0.25	0.10
24	2.V.1372.01815	4.V.1772.3309/2	SA 105	Ø50×30	15039142	–	40	46	26	26	20	24.3		0.46	0.18
	2.V.2374.01815/1	4.V.2374.3512	A182 F316L	Ø50×30	15024228	C									
	★ 2.V.1456.01815/1	4.V.1456.3816	ASTM A182 F304	Ø50×30	15024159	A									
	(c) ~~2.V.2476.01815~~	–	~~ASTM A182-F6~~	~~Ø56×30~~	~~15024261~~	~~B~~								~~0.58~~	
	12 2.V.C342.01815	–	ASTM SA 276-T410	Ø50×30	–	D									
26	2.V.0207.01815	4.V.0207.3357/1	SA 105	Ø50×30	15039142	–	42	48	28	26	20	26.3		0.46	0.19
28	2.V.2375.01815/1	4.V.2375.3513	A182 F316L	Ø50×30	15024228	C	44	50	30	26	20	28.3		0.46	0.20
	2.V.0104.01815	4.V.0104.3358/1	SA 105	Ø50×30	15039142	–									
	(c) ~~2.V.2478.01815~~	–	~~ASTM A182-F6~~	~~Ø56×30~~	~~15024264~~	~~B~~								~~0.58~~	
32	2.V.1373.01815	4.V.1373.3317/2	SA 105	Ø63×30	15039143	–	48	54	34	26	20	32.5		0.73	0.23
	★ 2.V.1458.01815/1	4.V.1458.3818	ASTM A182 F304	Ø63×30	15024160	A									
	(b) 2.V.2602.01815/1	–	A182 F316L	Ø63×30	15024230	C									
36	2.V.1374.01815	4.V.1374.3346/2	SA 105	Ø63×30	15039143	–	52	58	38	26	20	36.5		0.73	0.25
	(g) 2.V.1459.01815/2	4.V.1459.3821	ASTM A182 F304	Ø63×30	15024389	A									
	(c) ~~2.V.2480.01815~~	–	~~ASTM A182-F6~~	~~Ø63×30~~	~~15024262~~	~~B~~									
	(a) 2.V.2603.01815/1	–	A182 F316L	Ø63×30	15024230	C									
40	2.V.1375.01815	4.V.1375.3334/2	SA 105	Ø80×35	15039144	–	60	66	42	32	25	40.5		1.37	0.41
	(c) ~~2.V.2481.01815~~	–	~~ASTM A182-F6~~	~~Ø80×35~~	~~15024263~~	~~B~~									
	★ 2.V-C022-01815	–	ASTM A182 F304	Ø80×35		A									
44	(e) 2.V.0108.01815	4.V.0108.3359/1	SA 105	Ø80×35	15039144	–	64	70	46	32	25	44.5		1.37	0.44
	2.V-C016-01815		ASTM A182 F304	Ø80×35											
48	2.V.1218.01815	4.V.1218.3745/1	SA 105	Ø80×35	15039144	–	68	72	50	32	25	48.5		1.37	0.49
	(f) 2.V-C017-01815	–	ASTM A182 F304	Ø80×35											
	2.V-C343-01815	–	A182-F22	Ø80×35	–	–									
52	2.V.1209.01815	4.V.1209.3848	SA 105	Ø80×35	15039144	–	72	80	54	32	25	52.5		1.37	0.50
	2.V-C346-01815	–	A479-F304	Ø80×35	–										
60	2.V.1286.01815	4.V.1286.3720	SA 105	Ø100×55	15039136	–	80	90	62	50	35	60.5		3.40	1.05
	2.V-C347-01815	–	A479-F304	Ø100×55	–										
65	2.V-1757-01815	–	SA 105	Ø100×55	15339134	–	89	100	67	50	35	65.5		3.40	1.40
	2.V-C344-01815	–	A182-F22	Ø100×55	–										
24 (h)	2.V-N025-01815	–	SA 105	Ø50×26	15339142	–	40	46	26	22	16	24.3		0.4	0.16

Ø	±T
Ø18-30	-0.300 -0.430
Ø30-40	-0.310 -0.470
Ø40-50	-0.320 -0.480
Ø50-65	-0.340 -0.530
Ø65-80	-0.360 -0.550
Ø80-100	-0.380 -0.600

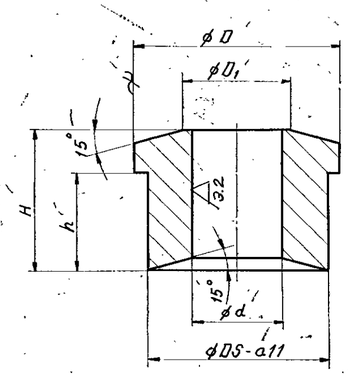

IDENTIFICATION MARK

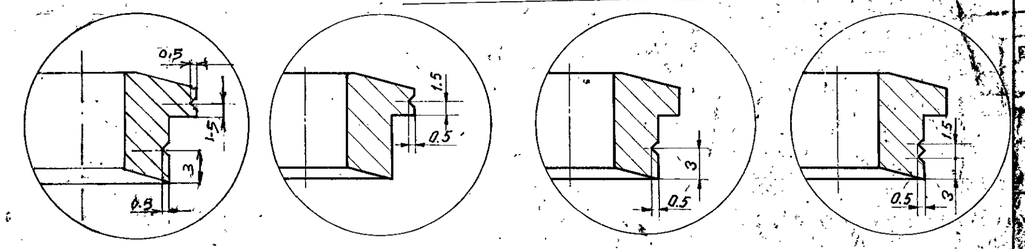

STYLE-D (12) STYLE-A STYLE-B STYLE-C

★ HARDNESS SHOULD NOT EXCEED RC22 FOR KCR PROJECT

SL. NO.	MATL. SPECN.	HEAT TREATMENT	SCRAP SORT	ITEM NO.	TYPE OF CERTIFICATION
6	ASTM SA 276 TYPE 410	SOLUTION HEAT TREATED	40		CERTIFY 7602-98
5	ASTM-A182-F22	INT	20		CERTIFY
4	ASTM A182-F6	NORMALISED	40		CERTIFY
3	~~AISI-304~~ ASTM A182 F304	SOLUTION HEAT TREATED			CERTIFY
2	A182-F316L				CERTIFY
1	SA 105	NORMALISED	10		CERTIFY

REV	DATE	ALTERED	CHECKED
12	5.10.93	ALTD: N.[illegible]	CHKD: [illegible]
11	28.8.93	ALTD: T.C. [illegible]	CHD: [illegible]

DTG. NO. 2.V.C341-01815 & 2.V.C342.01815 ARE INCLUDED AND TABULATION MODIFIED (d)

TYPE NOS. C343, C346, C347 & C344 INCLUDED. A182-F22 ADDED IN MATERIAL COLUMN.

REV	DATE	ALTERED	CHECKED	REMARKS
10	21.06.89	J. PRABAKAR	S. KUMAR	(h) GROUP NO:-N025 INCLUDED.
09	2.1.86	ALTD: DK	CHD: S. KUMAR	(g) FOR SIZE 36 MATL. CHANGED FROM AISI 304 TO ASTM A182 F304
8	12.3.85	X. Rajan	S. Kumar	(f) FOR SIZE 48 NEW DRG. INCLUDED.
7	8.3.85	L.R.SAMY	S. KUMAR	(e) 1. FOR SIZE 44 NEW DRG INCLUDED.
6	20.2.85	L.R.SAMY	S. KUMAR	(d) 1. MATL CHANGED FROM AISI 304 TO ASTM A182 F304 FOR SIZES 20, 24 & 32. 2. FOR SIZE 40 DRG. INCLUDED.
5	15.4.83	D. Vijay	S. Kumar	NOMINAL SIZE Ø65 INCLUDED FOR 20"-300# G.V.
04	9.8.79	S.S. Sundaram	APPD: [illegible]	MATL. IDENTIFICATION REVISED. STYLE A, B & C INTRODUCED.
03	31.1.78	K.B	APPD: BABU	(c) TYPE NOS 2476, 2478, 2480 & 2481 ARE DELETED & A NEW DRG. 3.V.0000.03689 HAS BEEN MADE FOR THESE TYPE NOS WITH AISI 304
02	31.10.71	M. RAJAKUMAR	APPD: BABU	(b) NOMINAL SIZE 32 INCLUDED FOR MATL. A182-F316L
01	18.5.77	K.B.	BABU	NOMINAL SIZES 16 & 36 INCLUDED FOR MATL. ASTM A182-F316L

CAUTION THE INFORMATION ON THIS DOCUMENT IS THE PROPERTY OF BHARAT HEAVY ELECTRICALS LTD. IT MUST NOT BE REPRODUCED DIRECTLY OR INDIRECTLY IN ANYWAY DETRIMENTAL TO THE INTERESTS OF THE COMPANY.

05-228/B

BHARAT HEAVY ELECTRICALS LTD.,
BOILER PLANT UNIT, TIRUCHIRAPALLI-620 014

DEPT: VL | CODE: 320 | SCALE: N.T.S. | WEIGHT (KG): REFER TABLE | REF. TO ASSY. DRG.

TITLE: GLAND FOLLOWER

	NAME	SIGN	DATE
DRAWN	T.R. RAMAMURTHY		
CHECKED	K. BASIYAM		
APPROVED	B. JAGADEESAN		11.2.85

DIMENSIONS TO BE CONTROLLED WITHIN LIMITS AS SHOWN. MACHINING TOLERANCE ±0.25 mm UNLESS OTHERWISE SHOWN NON-MACHINING TOLERANCE ±

CARD CODE: U01

DRAWING NO. 2.V.0000.01815 REV. 12

TRACED BY: S.R.L. APPD. BY: [illegible] DATE: 7.8.79

SCANNED
CORPORATE DRG ID TP-DG-2-V-0000-01815

ALL DIMENSIONS ARE IN MILLIMETRES. FOR TOLERANCES OF UNTOLERANCED DIMENSIONS DURING MANUFACTURE REFER RELEVANT QCP / QP.

DRAWING NO: 3-V-0000-06882

SL. No.	DRAWING No.	COMP. CODE	MATL.SPECN.	SUGG. SIZE	GROSS WT	DIMENSIONS ØDS a11	ØD	ØD1	H	h	Ød	MATL. MARK *	SCRAP SORT	WEIGHT (Kgs)	REMARKS
01	3-V-N081-06882/01	931040310000	SA 105, NR, CERTIFY	ø43x25	0.285	32.5	38	22	21	15	19.35	SA105	10	0.09	2"/ 300 CL
02	3-V-N025-06882/01	931040320000		ø40x26	0.26	35.7	40	26	22	16	22.5	SA105		0.16	3"/150 & 300 CL
03	3-V-N033-06882/01	931040330000		ø50x30	0.46	38.9	48	28	26	20	25.7	SA105		0.19	4"/150 & 300 CL
04	3-V-N001-06882/01	931040340000		ø60x30	0.666	45.2	54	34	26	20	28.87	SA105		0.23	6"/150 CL
05	3-V-N017-06882/01	931040350000		ø60x30	0.666	48.4	54	34	26	20	32.05	SA105		0.29	6"/300 CL
06	3-V-N009-06882/01	931040360000		ø63x30	0.73	48.4	58	38	26	20	32.05	SA105		0.26	8"/150 CL
07	3-V-N089-06882/01	931040370000		ø63x30	0.73	51.6	58	38	26	20	35.22	SA105		0.30	8"/300 CL
08	3-V-N057-06882/01	931040380000		ø70x36	1.09	51.6	66	42	32	25	35.22	SA105		0.45	10"/150 CL
09.	3-V-N065-06882/01	931040390000		ø70x36	1.09	61.1	66	45	32	25	41.77	SA105		0.41	10"/300 CL
10	3-V-N041-06882/01	931040400000		ø70x36	1.09	57.9	66	42	32	25	38.6	SA105		0.53	12"/150 CL
11	3-V-N105-06882/02	931040410000		ø75x36	1.25	61.1	70	45	32	25	41.77	SA105		0.50	12"/300 CL 14"/150 CL
12	3-V-N224-06882	931050240000		ø80x36	1.4	73.8	80	54	32	25	51.3	SA105		0.67	20"/150 CL
13	3-V-N229-06882	931059340000	A276GR410 HT(CERTIFY)	ø63x30	0.666	48.4	54	34	26	20	32.05	GR410	40	0.29	6"/300 CL
14	3-V-N338-06882	931062870000	SA 182-F316, SH,CERTIFY	ø40x26	0.26	35.7	40	26	22	16	22.5	F316	46	0.16	3"/150 & 300 CL
15	3-V-N339-06882	931062880000		ø60x30	0.666	45.2	54	34	26	20	28.87		46	0.23	6"/150 CL
16	3-V-N396-06882	931063410000		ø80x36	1.4	73.8	80	54	32	25	51.3			0.67	20"/150 CL
17	3-V-NG86-06882	932026110000	A276GR410 HT(CERTIFY)	ø75x36	1.25	64.3	72	48.5	32	25	45.0	GR410	40	0.45	16"/150 CL & 14"/300 C
18	3-V-N350-06882	931066890000	A 105, NR, CERTIFY									SA105	10		
19	3-V-N361-06882	931066900000		ø90x55	2.75	83.3	90	62	50	40	57.7	SA105	10	1.22	24"/150 CL
20	3-V-N436-06882	931071470000		ø80x36	1.4	67.5	80	54	32	25	48.1	SA105	10	0.49	16"/300 CL
21	3-V-N437-06882	931071480000		ø100x55	3.4	77	100	60	50	35	54.5		10	1.26	20"/300 CL
22	3-V-N201-06882	931079620000		ø43x25	0.215	32.5	38	22	15	9	19.35	SA105	10	0.09	2"/150 CL
23	3-V-NE96-06882	932011900000		ø100x60	3.7	86.5	100	66	51	36	60.83	SA105	10	1.27	22"/300 CL
24	3-V-ND15-06882	932031220000	SA182 F316 CERTIFY	ø60x27	0.60	48.4	58	38	21	15	32.05	F316	46	0.2	8"/150 ECO
25	3-V-NJ26-06882	932035550000	A276GR410 HT(CERTIFY)	ø80x36	1.4	67.5	80	54	32	25	48.1	410	40	0.49	16"/300 CL
26	3-V-NL97-06882	932063070000	SA182 F316 CERTIFY	ø56x28	0.54	32.5	38	22	21	15	19.35	F316	46	0.09	2"/150 & 300 CL
27	3-V-NK02-06882	932063240000		ø56x33	0.64	38.9	48	28	26	20	25.7			0.19	4"/150 & 300 CL

12.5 / 3.2

ø18-30	a11	-0.300
		-0.430
ø30-40		-0.310
		-0.470
ø40-50		-0.320
		-0.480
ø50-65		-0.340
		-0.530
ø65-80		-0.360
		-0.550
ø80-100		-0.380
		-0.600

NOTE

01. UNSPECIFIED CORNERS TO BE ROUNDED OFF TO R0.5

* 02. MATL MARK TO BE PUNCHED.

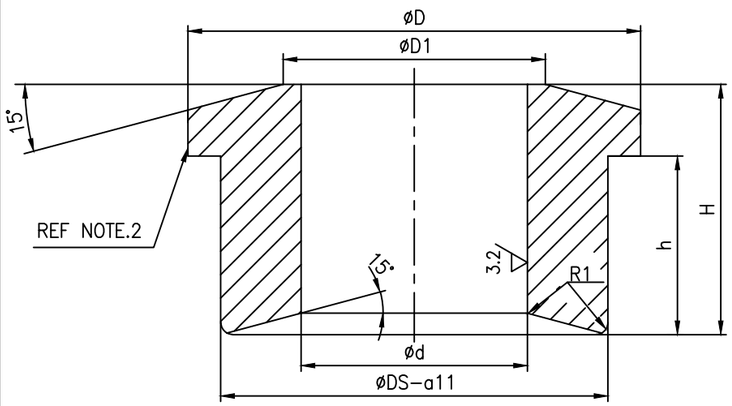

DCP No.	ALTD: RPS	APPD: SSK
–	CHD: MK	DT: 08.11.22

REV	SL. NO. 26 & 27 INCLUDED.
13	
ZONE –	

DCP No.	ALTD: A.MARIMUTHU	APPD: SSK
–	CHD: MS	DT: 26.09.14

REV	SL.No. 25 INCLUDED
12	
ZONE –	

CAUTION: The information on this document is the property of BHARAT HEAVY ELECTRICALS LTD. It must not be used directly or indirectly in any way detrimental to the interest of the company.

NO OF	DESCRIPTION	MATL CODE	MATL SPECN	HEAT TREATMENT	SCRAP SORT	NET WT (kg)	GROSS WT (kg)	DRAWING No. / COMP. CODE	ITEM No
–	–	–	–	–	–	–	–	–	–

TYPE OF PRODUCT
OR NAME OF
CUSTOMER/PROJECT

BHARAT HEAVY ELECTRICALS LTD.,
UNIT: HIGH PRESSURE BOILER PLANT.
TIRUCHIRAPALLI-620014.
365-191
02.03.2021

	NAME	SIGN	DATE	NO.OF VAR.
DRN	T.R.R.MURTHY		24.04.97	—
CHD	N.DHANDAPL		24.04.97	
APPD	A.VISWANATHAN		24.04.97	

DEPT	SCALE	WEIGHT (KG).	REFERENCE INFORMATIONS	NO. OF ITEMS
VL	NTS	REF TABLE	CAD :C306882	—
CODE 320				

TITLE	CARD CODE	DRAWING NO.	REV
GLAND FOLLOWER	U 01	3-V-0000-06882	13

Size A3

ALL DIMENSIONS ARE IN MILLIMETRES. FOR TOLERANCES OF UNTOLERANCED DIMENSIONS DURING MANUFACTURE REFER RELEVANT QCP / QP.

DRAWING NO. 3-V-0000-23540/3

12.5 / 3.2

SL. No.	DRAWING No.	COMP. CODE	RAW MATERIAL				DIMENSIONS												MATL MARK	STEM DIA.	NET WT. (Kg.)	REMARKS
			SUGGESTED SIZE	MATL. CODE	MATL. SPECN	WT. (Kg.)	ød1	ød2	øD1	øD2	H	H1	H2	h1	h2	R	RA	RB				
01	3-V-N834-23540	931097150000	ø100x70	15339134	SA105 NR, CERTIFY	4.4	63.3	61.0	95	84.5	56.5	6	45	43.5	13	120	2	3	A105	60.325	1.2	26"/150 CL.
02	3-V-N847-23540	931097160000	ø100x70	15339134		4.4	66.5	64.2	97	87.7	56.5	6	45	43.5	13	120	2	3	A105	63.5	1.4	28"/150 CL.
03	3-V-N848-23540	931097170000	ø110x70	–		5.3	72.8	70.5	105	94	57	6	45	44	13	120	2	3	A105	69.85	1.5	30"/150 CL.
04	3-V-N827-23540/1	931097180000	ø120x80	–		7.1	79.2	76.9	115	103	65	8.5 △	50	52	13	130	2	3	A105	76.2	2.1	32"/150 CL.
05	3-V-N846-23540	931097190000	ø125x80	15339281		7.7	85.5	83.2	122	119.4	70	7	56	54	16	140	2	3	A105	82.55	3.2	36"/150 CL.
06	3-V-N988-23540	931099910000	ø125x80	–	A276-410 HT, CERTIFY	7.7	85.5	83.2	122	119.4	70	7	56	54	16	140	2	3	410	82.55	3.2	36"/150 CL.
07	3-V-NH84-23540	932032980000	ø125x80	15339370	SA182 F22 NT, CERTIFY	7.1	79.2	76.9	115	103	65	8.5	50	52	13	130	2	3	F22	76.2	2.1	32"/150 CL.

ø80-100 a11	-0.380
	-0.600
ø100-120 a11	-0.410
	-0.630

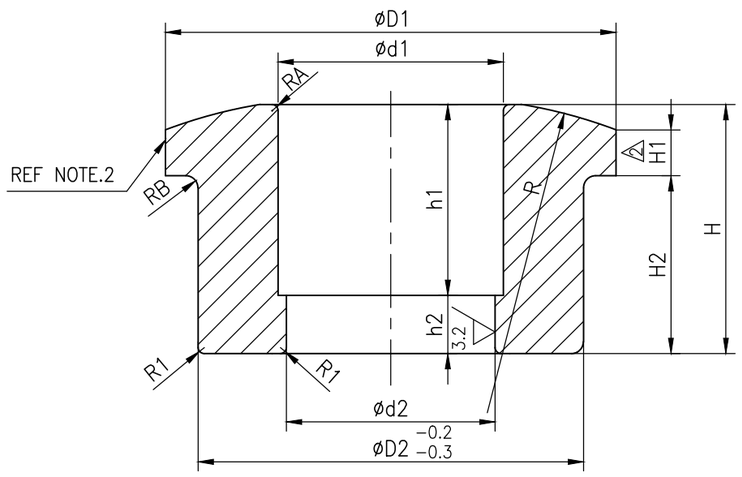

NOTES

01. UNSPECIFIED CORNERS TO BE ROUNDED OFF TO R0.5

* 02. MATL MARK TO BE PUNCHED.

DRAWING RETRACED WITH REV.2 ON 18.06.05

REV	DATE	ALTERED		REV	DATE	ALTERED	
3	16.06.14	CHD & APPD	RAMESH MS&SSK	2	18.06.05	CHD & APPD	VB RLN&MRK
IN SL. No.07 INCLUDED				IN SL. No.04 DIMENSION 8.5 WAS 6 DCP No.800341			

CAUTION: The information on this document is the property of BHARAT HEAVY ELECTRICALS LTD. It must not be used directly or indirectly in any way detrimental to the interest of the company.

TYPE OF PRODUCT
OR NAME OF
CUSTOMER/PROJECT

BHARAT HEAVY ELECTRICALS LTD.
UNIT: HIGH PRESSURE BOILER PLANT.
TIRUCHIRAPALLI 620014.
365-121

	NAME	SIGN	DATE	NO.OF VAR.
DRN	V.BAIRAVAN		18.06.05	
CHD	R.L.NARAYANAN		18.06.05	
APPD	M.RAJAKUMAR		18.06.05	

DEPT	SCALE	WEIGHT (KG).	REFERENCE INFORMATIONS	NO. OF ITEMS
VL	N T S		CAD REF: C323540	
CODE 320				

TITLE	CARD CODE	DRAWING NO.	REV
GLAND	U 01	3-V-0000-23540	3

Size A3

ALL DIMENSIONS ARE IN MILLIMETRES. FOR TOLERANCES OF UNTOLERANCED DIMENSIONS DURING MANUFACTURE REFER RELEVANT QCP / QP.

DRAWING NO. 3-V-0000-25184

SL. No.	DRAWING No.	COMP. CODE	RAW MATERIAL DETAILS			DIMENSIONS						SCRAP SORT	WEIGHT (Kgs)	REMARKS
			MATL.SPECN.	HEAT TREAT.	SUGG. SIZE	øDS	øD	øD1	H	h	ød			
01	3.V.NH51.25184	932027830000	ASTM A276 410 CERTIFY	N & T	ø118x75	96	115	77	65	46	70.7	40	2	16"-C300-RV
02	3.V.NH52.25184	932028060000			ø120x70	106	115	77	65	52	76	40	2.23	14" & 16"-C600-RV

12.5 3.2

ø30 – ø40	a11	-0.310
		-0.470
ø40 – ø50		-0.320
		-0.480
ø50 – ø65		-0.340
		-0.530
ø65 – ø80		-0.360
		-0.550
ø80 –ø100		-0.380
		-0.590
ø100–ø120		-0.410
		-0.630

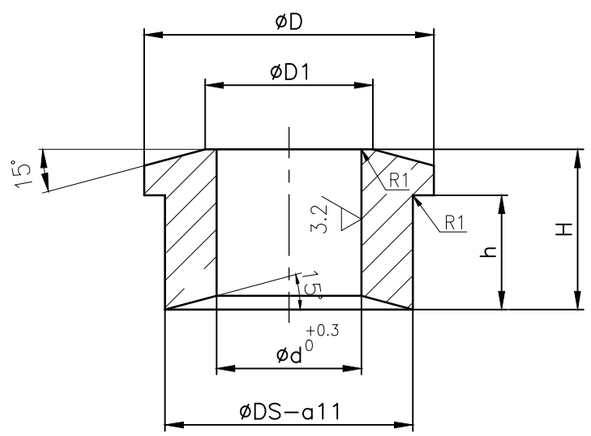

NOTE

01. BREAK ALL SHARP CORNERS.

NO OFF	DESCRIPTION	MATL CODE	MATL SPECN	HEAT TREATMENT	SCRAP SORT	NET WT (kg)	GROSS WT (kg)	DRAWING No	ITEM No
–	–	–	–	–	–	–	–	–	–

TYPE OF PRODUCT
OR NAME OF
CUSTOMER/PROJECT

BHARAT HEAVY ELECTRICALS LTD.,
UNIT: HIGH PRESSURE BOILER PLANT.
TIRUCHIRAPALLI-620014.
365-121

	NAME	SIGN	DATE	NO.OF VAR.
DRN	ARUNKUMAR P		29.11.12	
CHD	MRAJAK		29.11.12	
APPD	MRAJAK		29.11.12	

DEPT	SCALE	WEIGHT (KG).	REFERENCE INFORMATIONS	NO. OF ITEMS
VL	NTS	REF TABLE		
CODE 320				

TITLE	CARD CODE	DRAWING NO.	REV
GLAND FOLLOWER	U 01	3-V-0000-25184	00

REV	DATE	ALTERED
		CHD & APPD

CAUTION: The information on this document is the property of BHARAT HEAVY ELECTRICALS LTD. It must not be used directly or indirectly in any way detrimental to the interest of the company.

Size A3

ALL DIMENSIONS ARE IN MILLIMETRES. FOR TOLERANCES OF UNTOLERANCED DIMENSIONS DURING MANUFACTURE REFER RELEVANT QCP / QP.

DRAWING NO. 3-V-0000-06946/07

SL. No.	DRAWING No.	COMP. CODE	RAW MATERIAL DETAILS: MATL. SPECN.	SUGGESTED SIZE	SCRAP SORT	Wt. (Kg)	ØD	ØD1	ØB	ØB1	Ød	H	h	W	NET Wt. (Kg)	SIZE/RATING
1	3-V-N002-06946	931043040000	ASTM A182 F6a cl.3, H&T, CERTIFY	ø50 x 24	40	0.368	45.2	41.2	32.6	28.6	8	18	3	8	0.1	6"/150C
2	3-V-N328-06946	931058620000		ø34 x 20		0.186	32.5	30.5	21.05	19.05	6	15	2	4	0.067	2"/150C 2"/300C
3	3-V-N313-06946	931058630000		ø36 x 20		0.368	35.7	32.7	25.23	22.23	8	15	3	6	0.08	3"/150C 3"/300C
4	3-V-N303-06946	931058640000		ø40 x 20		0.368	38.9	34.9	29.4	25.4	8	15	3	6	0.07	4"/150C 4"/300C
5	3-V-N275-06946	931058650000		ø50 x 25		0.460	48.4	44.4	35.75	31.75	10	20	3	8	0.086	8"/150C 6"/300C
6	3-V-N329-06946	931058660000		ø54 x 25		0.460	51.6	47.6	38.93	34.93	10	20	3	8	0.09	8"/300C 10"/150C
7	3-V-N330-06946	931058670000		ø60 x 25		0.705	57.9	53.9	42.1	38.1	10	20	3	8	0.151	12"/150C
8	3-V-N331-06946/1	931058680000		ø63 x 30		0.705	61.1	57.1	44.28	41.28	12	20	3	8	0.191	10"-12"/300C, 14"-150C
9	3-V-N370-06946/1	931062190000		ø80 x 30		1.2	73.8	69.8	54.3	51.3	12	20	3	8	0.36	20"/150C
10	3-V-N460-06946	931072370000	ASTM A182-F316 SH, CERTIFY	ø34 x 20	46	0.186	32.5	30.5	21.05	19.05	6	15	2	4	0.067	2"-150C 2"-300C
11	3-V-N380-06946	931072380000		ø36 x 20		0.368	35.7	32.7	25.23	22.23	8	15	3	6	0.08	3"-150C/300C
12	3-V-U108-06946	931072390000		ø40 x 20		0.368	38.9	34.9	29.4	25.4	8	15	3	6	0.07	4"-150C/300C
13	3-V-N523-06946	931072400000		ø50 x 24		0.368	45.2	41.2	32.6	28.6	8	18	3	8	0.1	6"-150C
14	3-V-N302-06946	931072410000		ø50 x 25		0.460	48.4	44.4	35.75	31.75	10	20	3	8	0.086	6"-300C 8"-150C
15	3-V-N387-06946	931072420000		ø54 x 25		0.460	51.6	47.6	38.93	34.93	10	20	3	8	0.09	8"-300C 10"-150C
16	3-V-N384-06946/1	931072430000		ø63 x 30		0.705	61.1	57.1	44.28	41.28	12	20	3	8	0.191	10"-300C 12"-300C
17	3-V-N394-06946	931072440000		ø60 x 25		0.705	57.9	53.9	42.1	38.1	10	20	3	8	0.151	12"/150C
18	3-V-N598-06946/1	931075970000	ASTM A182-F6a cl.3, HT, CERTIFY	ø70 x 30	40	0.91	64.3	60.3	49.0	45.0	12	20	3	8	0.18	14"/300C, 16"/150C
19	3-V-K821-06946/2	931080370000		ø90 x 30		1.5	83.3	79.3	61.7	57.7	12	20	3	8	0.32	24"/150C
20	3-V-K797-06946/1	931080380000		ø75 x 30		1.1	67.5	63.5	52.1	48.1	12	20	3	8	0.21	16"/300C
21	3-V-K822-06946/1	931080390000		ø85 x 30		1.4	77	73	58.5	54.5	12	20	3	8	0.26	20"/300C
22	3-V-N826-06946	931098370000		ø112 x 30		2.3	105.6	101.6	80.7	76.7	12	22	3	8	0.42	32"/150C

DIA ABOVE	UPTO & INCLUDING	q11	H11
18	30	-0.300 / -0.430	+0.130 / 0
30	40	-0.310 / -0.470	+0.160 / 0
40	50	-0.320 / -0.480	+0.160 / 0
50	65	-0.340 / -0.530	+0.190 / 0
65	80	-0.360 / -0.550	+0.190 / 0
80	100	-0.380 / -0.600	+0.220 / 0
100	120	-0.410 / -0.630	+0.220 / 0

SECTION-AA

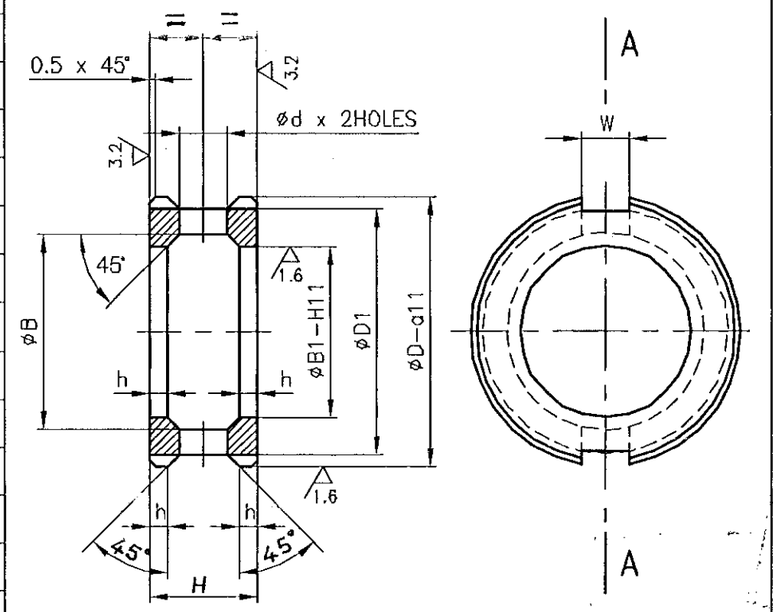

NOTE:-

1. HARDNESS REQUIRED 200HB (MIN.)

DRG. RETRACED WITH REV. 01 ON 12.10.96

REV.	DATE	ALT.	CHE & APPD.
04	19.5.97	R.L.	M.R.K.
03	18.1.97	R.L.	CHD & APPD: M.R.K
02	12.10.96	CHD & APPD	
07	4.2.03	V.B.	R.L.
06	14.1.2000	R.L.	M.R.K.
05	29.7.97	R.L.	M.R.K.

SL. NOS 19, 20 & 21 INCLUDED

SL. No. 18 INCLUDED

SL. No. 10 TO 17 INCLUDED

TOL. INCLUDED FOR SL. No. 19. DCP 800160

SL. No. 22 INCLUDED

FOR SL. NOS. 8, 9, 16, 18, 19, 20 & 21, DIM. 3 WAS 5. DCN No. HM 0268

CAUTION: The information on this document is the property of BHARAT HEAVY ELECTRICALS LTD. It must not be used directly or indirectly in any way detrimental to the interest of the company.

TYPE OF PRODUCT
OR NAME OF
CUSTOMER/PROJECT

BHARAT HEAVY ELECTRICALS LTD.,
UNIT: HIGH PRESSURE BOILER PLANT.
TIRUCHIRAPALLI-620014.

	NAME	SIGN	DATE	NO. OF VAR.
DRN	T.R.R.MURTHY		10.10.96	
CHD	N.DHANAPAL		12.10.96	
APPD	A.V.NATHAN		12.10.96	

DEPT	CODE	SCALE	WEIGHT (KG).	REFERENCE INFORMATIONS	NO. OF ITEMS
VL	320	NTS.	–	CAD:C306946	

TITLE	CARD CODE	DRAWING NO.	REV
LANTERN RING	U 01	3-V-0000-06946	07

SCANNED

Size A3

ALL DIMENSIONS ARE IN MILLIMETRES. FOR TOLERANCES OF UNTOLERANCED DIMENSIONS DURING MANUFACTURE REFER RELEVANT QCP / QP.

DRAWING NO. 3-V-0000-03023

SL. No.	DRAWING No.	COMP. CODE	RAW MATERIAL DETAILS				ØD	ØD1	ØB	ØB1	Ød	H	h	W	ØU	NET Wt. (Kg)
			MATL. SPECN.	SUGGESTED SIZE	SCRAP SORT	Wt. (Kg)										
1	3-V-0254-03023	–	A182-F6a cl.3 H&T CERTIFY	ø25 x 16	40	0.062	22	20	14	12	6	12	2	4	–	0.02
2	3-V-2372-03023	–	A182-F316L SH CERTIFY	ø50 x 16	46	0.062	22	20	14	12	6	12	2	4	16	0.02
3	3-V-0176-03023	–	A182-F6a cl.3 H&T CERTIFY	ø32 x 19	40	0.119	28	26	18	16	6	15	2	4	–	0.013
4	3-V-2373-03023	–	A182-F316L SH CERTIFY	ø50 x 19	46	0.186	32	30	22	20	6	15	2	4	25	0.039
5	3-V-1505-03023	930578850000	A182-F6a cl.3 H&T CERTIFY	ø40 x 19	40	0.186	32	30	22	20	6	15	2	4	–	0.067
6	3-V-2222-03023	930065060000		ø40 x 19	40	0.186	34	31	25	22	10	15	3	6	–	0.08
7	3-V-2374-03023	930576930000	A182-F316L SH CERTIFY	ø50 x 24	46	0.368	40	36	28	24	10	20	3	6	30	0.07
8	3-V-0128-03023	930064770000	A182-F6a cl.3 H&T CERTIFY	ø56 x 24	40	0.460	40	36	28	24	10	20	3	6	–	0.07
9	3-V-2283-03023	930559580000			40	0.460	42	38	30	26	10	20	3	6	–	0.075
10	3-V-0170-03023	930064780000			40	0.460	44	40	32	28	10	20	3	8	–	0.08
11	3-V-2375-03023	930574580000	A182-F316L SH CERTIFY	ø50 x 24	46	0.368	44	40	32	28	10	20	3	6	34	0.08
12	3-V-0171-03023	930064790000	A182-F6a cl.3 H&T CERTIFY	ø56 x 24	40	0.460	48	44	36	32	10	20	3	8	–	0.086
13	3-V-0173-03023	930064800000			40	0.460	52	48	40	36	10	20	3	8	–	0.09
14	3-V-1306-03023	930556690000		ø63 x 29	40	0.705	60	56	45	40	10	25	5	6	–	0.191
15	3-V-1299-03023	930603220000		ø80 x 29	40	1.140	64	60	48	44	12	25	5	8	–	0.236
16	3-V-P444-03023	931302910000	A182-F316 SH CERTIFY	ø56 x 24	46	0.460	40	36	28	24	10	20	3	6	–	0.07
17	3-V-NH51-03023	932027870000	A182-F6a cl.3 H&T CERTIFY	ø95 x 40	40	1.95	93	89	73.3	71	10	32	9	6	–	0.6
18	3-V-NH52-03023	932028090000		ø125 x 45	40	3.85	106	102	79	76	10	36	9	6	–	0.9

SECTION–AA

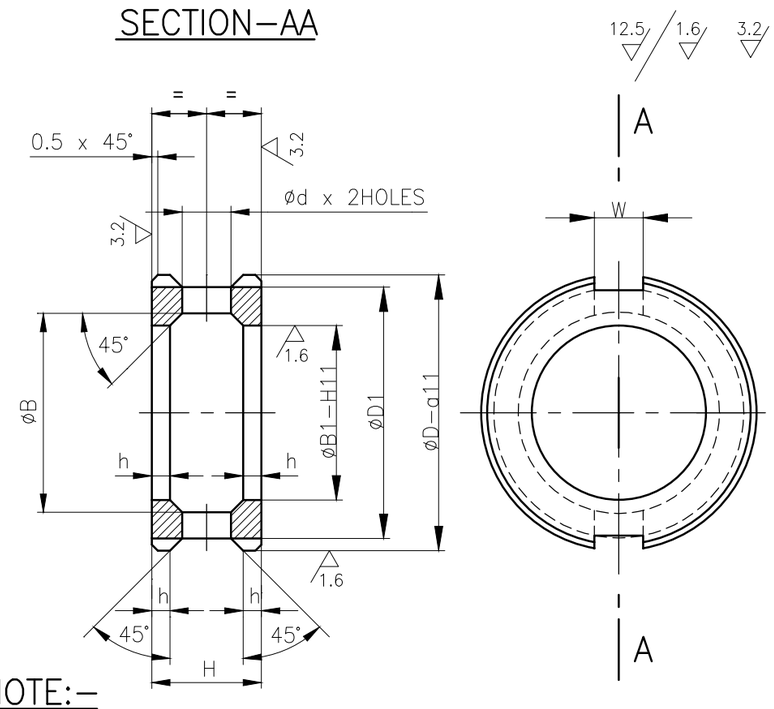

NOTE:–

1. HARDNESS REQUIRED 200HB (MIN.) FOR F6a MATL.

DIA ABOVE		UPTO & INCLUDING	a11	H11
65	–	80	–	+0.190
			–	+0.000
85	–	100	–0.380	–
			–0.600	–
100	–	115	–0.410	–
			–0.630	–

DETAIL–B

MATL. IDENTIFICATION FOR F316L

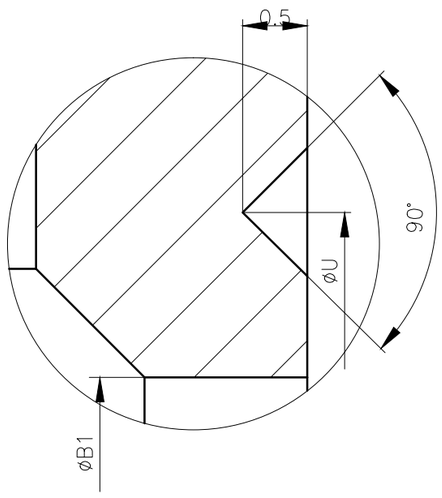

DIA ABOVE		UPTO & INCLUDING	a11	H11
10	–	18	–0.290	+0.110
			–0.400	+0.000
18	–	30	–0.300	+0.130
			–0.430	+0.000
30	–	40	–0.310	+0.160
			–0.470	+0.000
40	–	50	–0.320	+0.160
			–0.480	+0.000
50	–	65	–0.340	–
			–0.530	–

REV	DATE	ALTERED DEEPAKRAJ
02	06.11.12	CHD & APPD MRAJAK

SL.NO. 17 & 18 INCLUDED

CAUTION: The information on this document is the property of BHARAT HEAVY ELECTRICALS LTD. It must not be used directly or indirectly in any way detrimental to the interest of the company.

NO OFF	DESCRIPTION	MATL CODE	MATL SPECN	HEAT TREATMENT	SCRAP SORT	NET WT (kg)	GROSS WT (kg)	DRAWING No	ITEM No

TYPE OF PRODUCT OR NAME OF CUSTOMER/PROJECT: CS

DRG. REDRAWN WITH REV. 01 ON 13.07.04

BHARAT HEAVY ELECTRICALS LTD.
UNIT: HIGH PRESSURE BOILER PLANT.
TIRUCHIRAPALLI 620014.
365-121

	NAME	SIGN	DATE	NO.OF VAR.
DRN	K.P.LEON		13.07.04	
CHD	P.BOOMINATHAN		13.07.04	
APPD	K.S.RAMAN		13.07.04	

DEPT: VL
CODE: 320
SCALE: NTS.
WEIGHT (KG): –
REFERENCE INFORMATIONS: CAD:C303023
NO. OF ITEMS

TITLE: LANTERN RING
CARD CODE: U 01
DRAWING NO. 3-V-0000-03023
REV 02

Size A3

ALL DIMENSIONS ARE IN MILLIMETRES. FOR TOLERANCES OF UNTOLERANCED DIMENSIONS DURING MANUFACTURE REFER RELEVANT QCP / QP.

DRAWING NO. 3-V-0000-23804

SL. No.	DRAWING No.	COMP. CODE	RAW MATERIAL DETAILS				ØD	ØD1	ØB	ØB1	Ød	H	h	W	ØU	NET Wt. (Kg)	APPLICABLE VALVES
			MATL. SPECN.	SUGGESTED SIZE	SCRAP SORT	Wt. (Kg)											
01	3-V-P409-23804	931105890000	A182-F316L SH CERTIFY	ø56 x 24	46	0.460	44	40	32	28	10	20	3	8	30	0.08	4"-300C RV SG
02	3-V-P411-23804	931105900000	A182-F316L SH CERTIFY	ø56 x 24	46	0.460	52	48	40	36	10	20	3	8	34	0.09	6"-300C RV SG
03	3-V-P480-23804	931309890000	A182-F6a cl.3 H&T CERTIFY	ø82 x 24	40	1.06	79	75	60	55	10	20	3	8	-	0.17	10"-300C RV SG
04	3-V-P489-23804	932013400000	A182-F316 SH-CERTIFY	ø80 x 29	46	1.14	64	60	48	44	12	25	5	8	-	0.236	8"-300C RV SG
05	3-V-P545-23804	932017980000	A182-F316 SH-CERTIFY	ø82 x 24	46	1.06	79	75	60	55	10	20	3	8	-	0.17	10"-300C RV SG

12.5 / 1.6 / 3.2

DIA ABOVE		UPTO & INCLUDING	a11	H11
10	-	18	-0.290	+0.110
			-0.400	0
18	-	30	-0.300	+0.130
			-0.430	0
30	-	40	-0.310	+0.160
			-0.470	0
40	-	50	-0.320	+0.160
			-0.480	0
50	-	65	-0.340	+0.185
			-0.530	0
65	-	80	-0.360	-
			-0.555	-

SECTION-AA

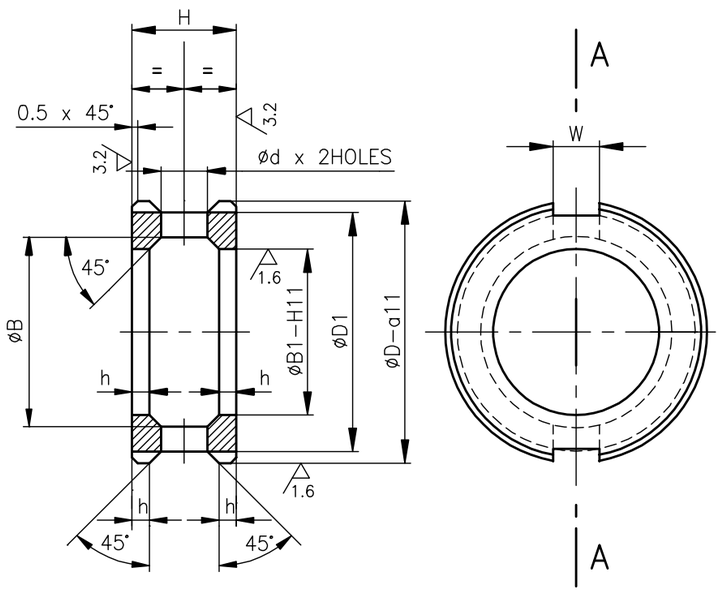

NOTE:-

1. HARDNESS REQUIRED 200HB (MIN.) FOR F6a MATL.

NO OFF	DESCRIPTION	MATL CODE	MATL SPECN	HEAT TREATMENT	SCRAP SORT	NET WT (kg)	GROSS WT (kg)	DRAWING No	ITEM No

TYPE OF PRODUCT OR NAME OF CUSTOMER/PROJECT: CS

DRG.REDRAWN WITH REV.03 ON 05.12.2009

BHARAT HEAVY ELECTRICALS LTD.
UNIT: HIGH PRESSURE BOILER PLANT.
TIRUCHIRAPALLI - 620014.
365-121

	NAME	SIGN	DATE	NO.OF VAR.
DRN	T.R.R.MURTHY		28.05.08	
CHD	T.R.R.MURTHY		28.05.08	
APPD	P.BOOMINATHAN		28.05.08	

REV	DATE	ALTERED	T.R.R
03	05.12.09	CHD & APPD	SSK & MRK

SL.NO.05 INCLUDED

CAUTION: The information on this document is the property of BHARAT HEAVY ELECTRICALS LTD. It must not be used directly or indirectly in any way detrimental to the interest of the company.

DEPT	SCALE	WEIGHT (KG).	REFERENCE INFORMATIONS	NO. OF ITEMS
VL	NTS.	-	CAD:C323804	
CODE 320				

TITLE	CARD CODE	DRAWING NO.	REV
LANTERN RING	U 01	3-V-0000-23804	03

Size A3

ALL DIMENSIONS ARE IN MILLIMETRES. FOR TOLERANCES OF UNTOLERANCED DIMENSIONS DURING MANUFACTURE REFER RELEVANT QCP / QP.

DRAWING NO. 3-V-0000-17745

12.5 / 3.2 / 1.6

SL. No.	DRAWING No.	COMPONENT CODE	RAW MATERIAL DETAILS					DIMENSIONS								NET WEIGHT (Kgs.)
			SPECIFICATION	SUGGESTED SIZE	HEAT TREATMENT	SCRAP	Wt.(Kg)	øD1	øD2	øD3	øD4	øD5	H	A	W	
01.	3-V-F701-17745	93 204 032 0000	SA 182 F6a Cl.3	ø38 x 25	HARDENED & TEMPERED 250 HB (MAX.)	40	0.22	35.7	31.7	26.0	22.2	10.0	20.0	4.0	8.0	0.07
02.	3-V-F702-17745	93 167 281 0000	SA 182 F6a Cl.3	ø42 x 25		40	0.31	38.9	34.0	29.0	25.4	10.0	20.0	5.0	8.0	0.08
03.	3-V-F703-17745	93 167 282 0000	SA 182 F6a Cl.3	ø48 x 30		40	0.43	45.2	41.0	32.0	28.6	10.0	24.0	5.0	8.0	0.13
04.	3-V-F704-17745	93 167 283 0000	SA 182 F6a Cl.3	ø60 x 30		40	0.67	57.9	53.0	42.0	38.1	10.0	24.0	5.0	8.0	0.21
05.	3-V-F705-17745	93 167 284 0000	SA 182 F6a Cl.3	ø63 x 30		40	0.73	61.1	57.0	45.0	41.3	10.0	24.0	5.0	8.0	0.22
06.	3-V-F706-17745	93 167 285 0000	SA 182 F6a Cl.3	ø70 x 30		40	0.91	67.5	63.0	52.0	47.6	10.0	25.0	5.0	8.0	0.26
07.	3-V-F707-17745	93 167 286 0000	SA 182 F6a Cl.3	ø76 x 35		40	1.25	73.8	69.0	54.0	50.8	10.0	30.0	5.0	8.0	0.40
08.	3-V-P560-17745	93 202 398 0000	SA 182 F6a Cl.3	ø90 x 35		40	1.74	87.0	84.0	65.0	62.0	10.0	30.0	5.0	8.0	0.58

FROM	TO	b9	H11
ø18	ø30	−0.160	+0.130
		−0.212	0
ø30	ø40	−0.170	+0.160
		−0.232	0
ø40	ø50	−0.180	+0.160
		−0.242	0
ø50	ø65	−0.190	+0.190
		−0.264	0
ø65	ø80	−0.200	+0.190
		−0.274	0
ø80	ø100	−0.220	+0.220
		−0.307	0

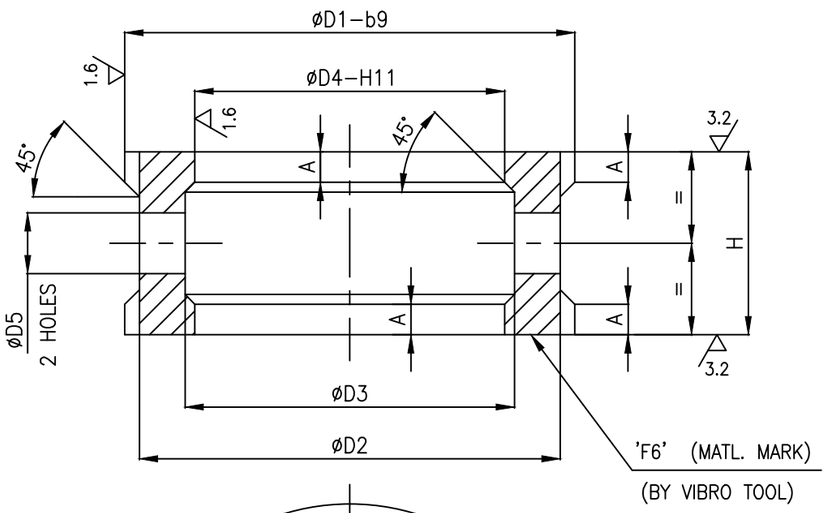

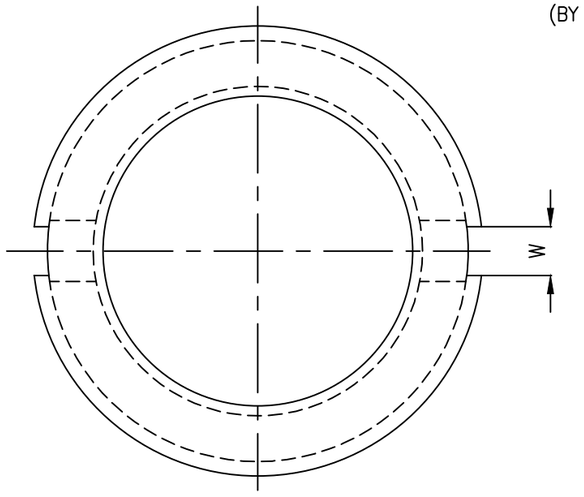

NOTE

01. CHAMFER ALL SHARP CORNERS TO 0.5x45°

REV	DATE	ALTERED	
02	18.04.18	ALTERED	R.P.SINGH
		CHD & APPD	SSK & KRS
	SL. No. 08 INCLUDED		
REV	DATE	ALTERED	K.NAVIN
1	17.06.16	CHD & APPD	MS & SSK
	DRAWING No. 3-V-F701-17745 INCLUDED		

CAUTION: The information on this document is the property of BHARAT HEAVY ELECTRICALS LTD. It must not be used directly or indirectly in any way detrimental to the interest of the company.

NO OFF	DESCRIPTION	MATL CODE	MATL SPECN	HEAT TREATMENT	SCRAP SORT	NET WT (kg)	GROSS WT (kg)	DRAWING No	ITEM No
–	–	–	–	–	–	–	–	–	–

TYPE OF PRODUCT
OR NAME OF
CUSTOMER/PROJECT

BHARAT HEAVY ELECTRICALS LTD.,
UNIT: HIGH PRESSURE BOILER PLANT.
TIRUCHIRAPALLI-620014.
365-121

	NAME	SIGN	DATE	NO.OF VAR.
DRN	M.SRINIVASAN		23.07.97	
CHD	K.S.RAMAN		23.07.97	
APPD	N.NAGARAJAN		23.07.97	

DEPT VL
CODE 320
SCALE NTS
WEIGHT (KG). REF. TABLE
REFERENCE INFORMATIONS
C600 – COMPACT
CAD :C317745
NO. OF ITEMS

TITLE: LANTERN RING
CARD CODE: U 01
DRAWING NO. 3-V-0000-17745
REV 2

Size A3

ALL DIMENSIONS ARE IN MILLIMETRES. FOR TOLERANCES OF UNTOLERANCED DIMENSIONS DURING MANUFACTURE REFER RELEVANT QCP / QP.

DRAWING NO. 3-V-0000-24821

SL. No.	DRAWING NUMBER	COMP. CODE	MATL. SPECN.	SUGG. SIZE	MATL. CODE	SCRAP SORT	GROSS WT.(Kg)	DIMENSIONS ØD	ØD1	ØB	ØB1	Ød	H	h	W	FINISH WT IN (KG)	SIZE/RATING
01	3-V-NG07-24821	932017610000	ASTM A182 F6a Cl.3,H&T,CERTIFY	ø100x45	150242640000	40	2.77	96	92	74	70	12	36	3	8	0.85	26"/300
02	3-V-NG08-24821	932017620000	ASTM A182 F316 SH,CERTIFY	ø100x45	–												
03	3-V-NG12-24821	932018350000	ASTM A182 F6a Cl.3,H&T,CERTIFY	ø88x40	–	40	1.91	86.5	82.5	64.3	60.3	12	30	3	8	0.54	22"/300

12.5 3.2 1.6

ø80-100 a11	-0.380
	-0.600
ø50-80 H11	+0.190
	0

SECTION-AA

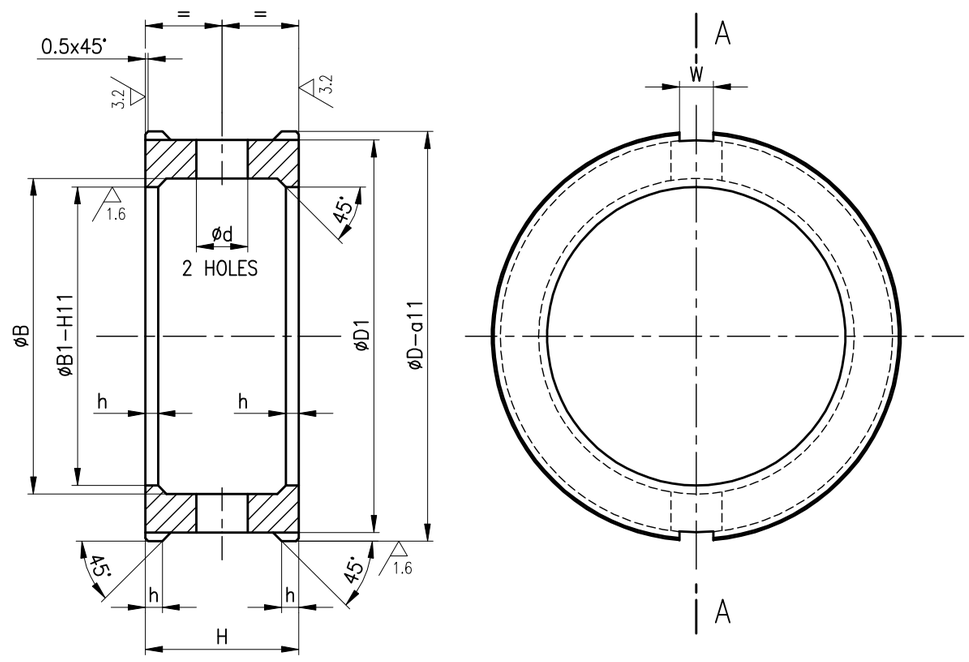

NO OFF	DESCRIPTION	MATL CODE	MATL SPECN	HEAT TREATMENT	SCRAP SORT	NET WT (kg)	GROSS WT (kg)	DRAWING No	ITEM No

TYPE OF PRODUCT
OR NAME OF
CUSTOMER/PROJECT

BHARAT HEAVY ELECTRICALS LTD.,
UNIT: HIGH PRESSURE BOILER PLANT.
TIRUCHIRAPALLI-620014.

	NAME	SIGN	DATE	NO.OF VAR.
DRN	V.BAIRAVAN		31.12.09	
CHD	S.SATHEES KUMAR		31.12.09	
APPD	M.RAJAKUMAR		31.12.09	

REV	DATE	ALTERED
		CHD & APPD

CAUTION: The information on this document is the property of BHARAT HEAVY ELECTRICALS LTD. It must not be used directly or indirectly in any way detrimental to the interest of the company.

DEPT VL
CODE 320
SCALE N T S
WEIGHT (KG).
REFERENCE INFORMATIONS 3-V-0000-24821-0-0
NO. OF ITEMS

TITLE LANTERN RING
CARD CODE U 01
DRAWING NO. 3-V-0000-24821
REV

Size A3

FOR TOLERANCES OF UNTOLERANCED DIMENSIONS DURING MANUFACTURE REFER RELEVANT QCP/QP

SL.No	DRG. No	RAW MATERIAL SPECIFICATION	SIZE	CODE	WT.	DIMENSIONS ϕd	D	PCD	ϕd1		WT/Pc (kg)	REMARKS.
01	3-V-E140-90025/01	IS 2062 Fe 410 WB	Sq 123x123 -12	15/011/132	1.42	21	110	88	65		0.45	ϕ 200 HANDWHEEL
02	3-V-E141-90025/01	"	"	"	1.42	25	110	88	65		0.45	ϕ 250 "
03	3-V-E142-90025/01	"	"	"	1.42	29	110	88	65		0.45	ϕ 315 "
04	3-V-E143-90025/01	"	"	"	1.42	33	110	88	65		0.44	ϕ 400 "
05	3-V-E144-90125/01	"	"	"	1.42	37	110	88	65		0.44	ϕ 450 "
06	3-V-E145-90025/01	"	"	"	1.42	41	110	88	65		0.43	ϕ 500 "
07	3-V-E146-90025/01	"	"	"	1.42	45	110	88	65		0.42	ϕ 560 "
08	3-V-E147-90025/01	"	"	"	1.42	53	110	88	65		0.41	ϕ 710 "
09	3-V-E148-90025/01	"	Sq 103x103 -12	"	1.00	13	90	72	52		0.41	ϕ 100 "
10	3-V-E149-90025/01	"	"	"	1.00	15	90	72	52		0.40	ϕ 125 "
11	3-V-E150-90025/01	"	"	"	1.00	17	90	72	52		0.39	ϕ 160 "
12	3-V-E151-90025/01	"	"	"	1.00	21	90	72	52		0.39	ϕ 200 "
13	3-V-E152-90025/01	"	"	"	1.00	25	90	72	52		0.38	ϕ 250 "
14	3-V-E153-90025	"	"	"	1.00	29	90	72	52		0.37	ϕ 315 "
15	3-V-E154-90025/01	IS 2062 Fe410 -WB	"	15/011/132	1.00	33	90	72	52		0.36	ϕ 400 "

MICROFILMED ON 20.1.84
ROLL 005321 FRAME 212

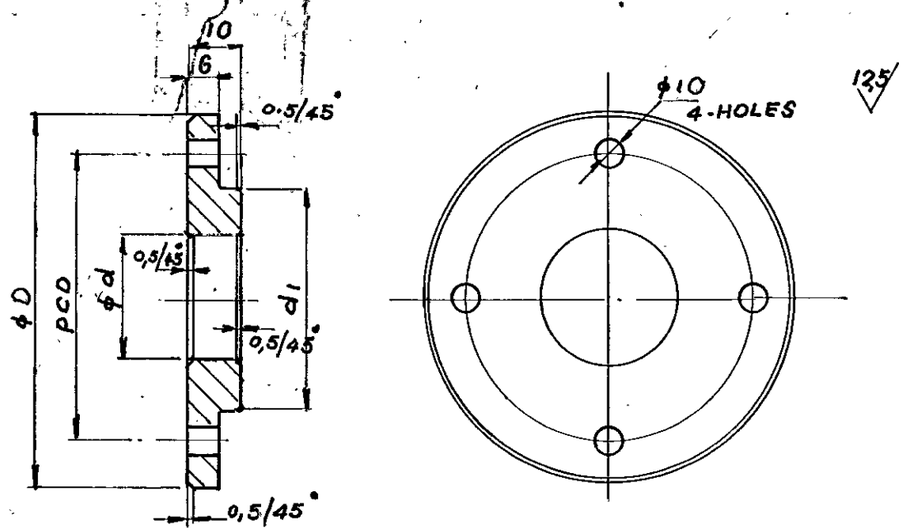

IS 2062 Fe 410 WB	NR	10	CERTIFY.
MATL. SPECIFICATION	HEAT TREATMENT	SCRAP SORT	TYPE OF IDENTIFICATION

BHARAT HEAVY ELECTRICALS LTD.,
BOILER PLANT UNIT, TIRUCHIRAPALLI-14

FIRST ANGLE	SCALE	DRAWN	M. Dakshamoorthy	TOTAL wt. (kg)	
		CHECKED		TYPE	
		APPROVED	Chokalingam		
ALL DIMENSIONS IN MILLIMETRES		DATE	16.5.78	NEW/OLD DRG. No.	

TITLE: **BEARING RETAINER**

DRAWING No. **3-V-E000-90025** REVISION 01

REV	DATE	ALTERED / CHECKED & APPD
01	28.12.96	T.L.L

ZONE

NOTES UPDATED
REFER DCN. CS:0647

CAUTION

THE INFORMATION CONTAINED IN THIS DRAWING IS THE PROPERTY OF BHARAT HEAVY ELECTRICALS LIMITED., BOILER PLANT UNIT, TIRUCHY-620 014. AND SHALL NOT BE USED WITHOUT THEIR EXPRESS WRITTEN PERMISSION IN ANY FORM OR PART THEREOF FOR ANY OTHER PURPOSE THAN FOR WHICH IT IS SENT TO YOU.

05-229

FOR TOLERANCES OF UNTOLERANCED DIMENSIONS DURING MANUFACTURE REFER RELEVANT QCP/QP

SL.No	DRG. No	RAW MATERIAL SPECIFICATION	SIZE	CODE	WT.	DIMENSIONS ϕd	D	PCD	ϕd1		WT/Pc (kg)	REMARKS.
01	3-V-E140-90025/01	IS 2062 Fe 410 WB	Sq 123x123 -12	15/011/132	1.42	21	110	88	65		0.45	ϕ 200 HANDWHEEL
02	3-V-E141-90025/01	"	"	"	1.42	25	110	88	65		0.45	ϕ 250 "
03	3-V-E142-90025/01	"	"	"	1.42	29	110	88	65		0.45	ϕ 315 "
04	3-V-E143-90025/01	"	"	"	1.42	33	110	88	65		0.44	ϕ 400 "
05	3-V-E144-90125/01	"	"	"	1.42	37	110	88	65		0.44	ϕ 450 "
06	3-V-E145-90025/01	"	"	"	1.42	41	110	88	65		0.43	ϕ 500 "
07	3-V-E146-90025/01	"	"	"	1.42	45	110	88	65		0.42	ϕ 560 "
08	3-V-E147-90025/01	"	"	"	1.42	53	110	88	65		0.41	ϕ 710 "
09	3-V-E148-90025/01	"	Sq 103x103 -12	"	1.00	13	90	72	52		0.41	ϕ 100 "
10	3-V-E149-90025/01	"	"	"	1.00	15	90	72	52		0.40	ϕ 125 "
11	3-V-E150-90025/01	"	"	"	1.00	17	90	72	52		0.39	ϕ 160 "
12	3-V-E151-90025/01	"	"	"	1.00	21	90	72	52		0.39	ϕ 200 "
13	3-V-E152-90025/01	"	"	"	1.00	25	90	72	52		0.38	ϕ 250 "
14	3-V-E153-90025	"	"	"	1.00	29	90	72	52		0.37	ϕ 315 "
15	3-V-E154-90025/01	IS 2062 Fe410 -WB	"	15/011/132	1.00	33	90	72	52		0.36	ϕ 400 "

MICROFILMED ON 20.1.84
ROLL 005321 FRAME 212

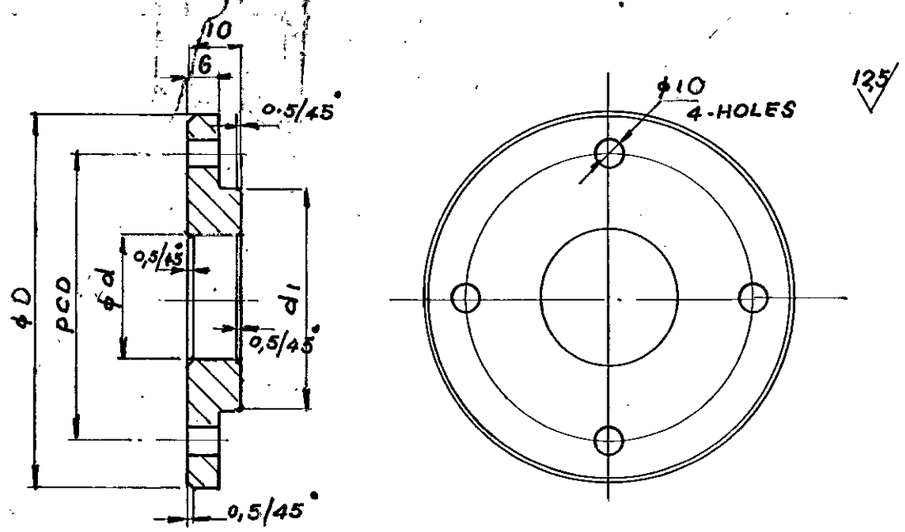

IS 2062 Fe 410 WB	NR	10	CERTIFY.
MATL. SPECIFICATION	HEAT TREATMENT	SCRAP SORT	TYPE OF IDENTIFICATION

BHARAT HEAVY ELECTRICALS LTD.,
BOILER PLANT UNIT, TIRUCHIRAPALLI-14

FIRST ANGLE	SCALE	DRAWN	M. Dakshamoorthy	TOTAL wt. (kg)	
		CHECKED		TYPE	
		APPROVED	Chokalingam		
ALL DIMENSIONS IN MILLIMETRES		DATE	16.5.78	NEW/OLD DRG. No.	

TITLE: **BEARING RETAINER**

DRAWING No. **3-V-E000-90025** REVISION 01

REV	DATE	ALTERED / CHECKED & APPD
01	28.12.96	T.L.L

ZONE

NOTES UPDATED
REFER DCN. CS:0647

CAUTION

THE INFORMATION CONTAINED IN THIS DRAWING IS THE PROPERTY OF BHARAT HEAVY ELECTRICALS LIMITED., BOILER PLANT UNIT, TIRUCHY-620 014. AND SHALL NOT BE USED WITHOUT THEIR EXPRESS WRITTEN PERMISSION IN ANY FORM OR PART THEREOF FOR ANY OTHER PURPOSE THAN FOR WHICH IT IS SENT TO YOU.

05-229

ALL DIMENSIONS ARE IN MILLIMETRES. FOR TOLERANCES OF UNTOLERANCED DIMENSIONS DURING MANUFACTURE REFER RELEVANT QCP / QP.

DRAWING NO. 3-V-0000-03124/06

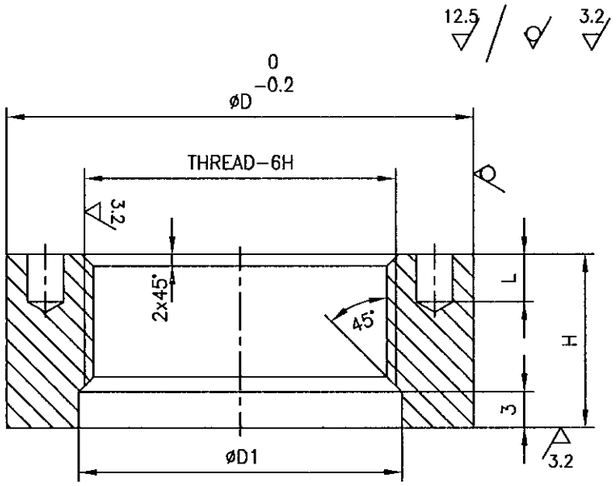

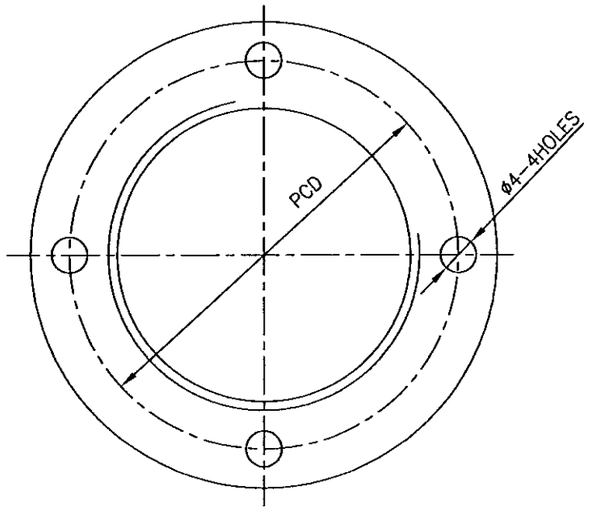

SL.NO	DRAWING NO.	COMP CODE	MATL.SPECN.	SUGGESTED MIN.SIZE	SCRAP SORT	RAW MATL. WT.IN KGS.	DIMENSION						WEIGHT IN KGS.
							ØD	ØD1	THREAD	PCD	H	L	
01	3.V.1587.03124	93 059 231 0000	ASTM A105 CERTIFY NORMALISED	ø55x20	10	0.37	55	43	M42x2	50	15	8	0.11
02	3.V.1588.03124	93 059 445 0000		ø60x23	10	0.51	60	49	M48x2	55	18	8	0.14
03	3.V.1590.03124	93 059 645 0000		ø76x25	10	0.89	76	61	M60x2	70	20	8	0.26
04	3.V.1591.03124	93 059 781 0000		ø86x27	10	1.23	86	69	M68x2	80	22	8	0.37
05	3.V.C014.03124/01	93 061 598 0000		ø74x23	10	0.78	74	58	M56x2	68	18	8	0.25
06	3.V.C015.03124	93 061 630 0000		ø84x25	10	1.09	84	69	M68x2	79	20	8	0.29
07	3.V.N201.03124	93 107 963 0000		ø55x15	10	0.28	55	43	M42x2	50	10	6	0.07
08	3.V.1450.03124	93 100 158 0000	ASTM A182-F316 CERTIFY SOLUTION ANNEALED	ø55x20	46	0.37	55	43	M42x2	50	15	8	0.11
09	3.V.1451.03124	93 100 159 0000		ø60x23	46	0.51	60	49	M48x2	55	18	8	0.14
10	3.V.1453.03124	93 100 160 0000		ø76x25	46	0.89	76	61	M60x2	70	20	8	0.26
11	3.V.1454.03124	93 100 161 0000		ø86x27	46	1.23	86	69	M68x2	80	22	8	0.37

NO OFF	DESCRIPTION	MATL CODE	MATL SPECN	HEAT TREATMENT	SCRAP SORT	NET WT (kg)	GROSS WT (kg)	DRAWING No	ITEM No
—	—	—	—	—	—	—	—	—	—

TYPE OF PRODUCT
OR NAME OF
CUSTOMER/PROJECT

BHARAT HEAVY ELECTRICALS LTD.,
UNIT: HIGH PRESSURE BOILER PLANT.
TIRUCHIRAPALLI-620014.
365-121

	NAME	SIGN	DATE	NO.OF VAR.
DRN	M.SRINIVASAN		11.02.04	
CHD	P.BOOMINATHAN		11.02.04	
APPD	K.S.RAMAN		11.02.04	

DEPT VL
CODE 320
SCALE N.T.S.
WEIGHT (KG). REFER TABLE
REFERENCE INFORMATIONS
ALTERNATE DRG.No. 3-V-0000-02973
CAD : C303124
NO. OF ITEMS

TITLE
BEARING RETAINER
(BOTTOM)

CARD CODE U 01

DRAWING NO. 3-V-0000-03124

REV 06

REV	DATE	ALTERED
06	24.04.97	T.R.R.MURTHY
		CHD & APPD A.V.N

DRAWING NUMBER 3-V-N201-03124 INCLUDED.

CAUTION: The information on this document is the property of BHARAT HEAVY ELECTRICALS LTD. It must not be used directly or indirectly in any way detrimental to the interest of the company.

Size A3

ALL DIMENSIONS ARE IN MILLIMETRES. FOR TOLERANCES OF UNTOLERANCED DIMENSIONS DURING MANUFACTURE REFER RELEVANT QCP / QP.

DRAWING NO: 3-V-0000-02948

SL. No.	DRAWING No.	MATL. SPECN.	RAW MATL. SIZE	MATL. CODE	NET WT. / GROSS WT.	HEAT TREAT MENT / SCRAP SORT	MDxP-6g	ØD2-H8	ØD1	ØD	H	h1	h2	W-h11	ØD3	ØD4	h3	REMARKS
1	3-V-2476-02948/02	ASTM A182 GrF6	Ø56 x 30	15024261	0.143	H&T	42x2	30.3	39	52	20	5	4	46	42	-	25	2-C300-SV/RV
	93 058 368 0000				0.580	40												
2	3-V-2478-02948/03	ASTM A182 GrF6	Ø80 x 45	15024263	0.658	H&T	56x2	36.3	53	72	26	6	4	65	56	-	40	3-C300-SV/RV
	93 058 592 0000				2.360	40												
3	3-V-2480-02948/03	ASTM A182 GrF6	Ø100 x 125	15024264	1.503	H&T	64x4	44.3	58	86	38	10	8	75	64	46	90	6-C300 SV
	93 059 449 0000				6.756	40												
4	3-V-2481-02948/02	ASTM A182 GrF6	Ø100 x 125	15024264	2.205	H&T	72x4	48.3	66	100	45	10	8	90	72	50	115	8-C300 SV
	-				7.680	40												
5	3-V-2479-02948	ASTM A182 GrF6	Ø80 x 80	15024263	0.890	H&T	56x2	36.3	53	72	26	6	4	65	56	38	75	4-C300-SV/RV
	-				3.140	40												
6	3-V-2670-02948	ASTM A182 GrF6	Ø100 x 110	15024264	1.573	H&T	72x4	52.3	66	100	39	10	8	90	72	55	100	8-C300 SV
	93 100 575 0000				6.756	40												
7	3-V-2883-02948	ASTM A182 F304	Ø90 x 115	---	1.250	SH	60x4	40.3	54	85	44	10	8	75	60	42	110	6-C150-SV
	93 166 424 0000				5.740	46												
8	3-V-P300-02948/01	ASME SA479, T304	Ø100 x 83	15024103	1.100	SH	64x4	44.3	58	86	38	10	8	75	64	46	72	6-C300-SV/RV
	93 106 148 0000	CERTIFY			5.120	46												
9	3-V-P295-02948	ASME SA479, T304	Ø80 x 45	15024210	0.658	SH	56x2	36.3	53	72	26	6	4	65	56	-	40	3-C300-SV/RV
	93 106 149 0000	CERTIFY			2.360	46												
10	3-V-2927-02948/01	ASTM SA182 Gr F316	Ø100 x83	15924246	1.100	SH	64x4	44.3	58	86	38	10	8	75	64	46	72	6-C300-SV/RV
	93 106 661 0000	CERTIFY			5.120	46												
11	3-V-2925-02948	ASTM SA182 Gr F316	Ø100 x 110	15924246	1.573	SH	72x4	52.3	66	100	39	10	8	90	72	55	100	8-C300 SV
	93 106 662 0000	CERTIFY			6.756	46												
12	3-V-P726-02948/01	ASTM SA182 Gr F60	Ø110 x 83	92203838	1.100	SH	64x4	44.3	58	86	38	10	8	75	64	46	72	6-C300-SV/RV
	93 205 253 0000	CERTIFY			6.190	46												
13	3-V-P779-02948/01	SA351 CF3M	—	92 203 889	1.100	SH	64x4	44.3	58	86	38	10	8	75	64	46	72	6-C300-SV/RV
	93 205 474 0000	CERTIFY			3.450	46												
14	3-V-P831-02948	SA351 CF3M	—	92 206 013	1.573	SH	72x4	52.3	66	100	39	10	8	90	72	55	100	8-C300 SV
	93 205 794 0000	CERTIFY			5.960	46												

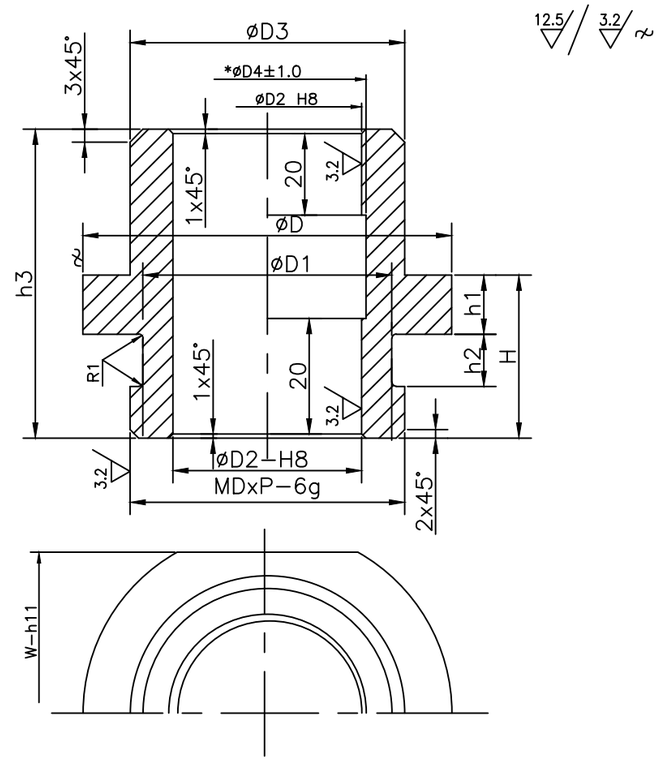

40.1–50.0 h11	0 / −0.160
50.1–80.0 h11	0 / −0.190
80.1–120.0 h11	0 / −0.220
30.0–50.0 H8	+0.039 / 0

NOTES:

1. HEAT TREAT TO 250BHN MIN. FOR A182–F6 MATL ONLY
2. MATL. SHALL BE 'CERTIFY'.
3. *DIMENSION ØD4 FOR UNDERCUT IS APPLICABLE FOR SL.No.3,4,5,6,7,8,10,11,12 ONLY. FOR SL.No.1, 2 & 3 UNDECUT SHALL NOT BE PROVIDED.

NO OF	DESCRIPTION	MATL CODE	MATL SPECN	HEAT TREATMENT	SCRAP SORT	NET WT (kg)	GROSS WT (kg)	DRAWING No. / COMP. CODE	ITEM No
01	RETAINER*	--	--	--	--	--	--	-- / --	--

CAUTION: The information on this document is the property of BHARAT HEAVY ELECTRICALS LTD. It must not be used directly or indirectly in any way detrimental to the interest of the company.

TYPE OF PRODUCT
OR NAME OF
CUSTOMER/PROJECT

365–191
02.03.2021

BHARAT HEAVY ELECTRICALS LTD.,
UNIT: HIGH PRESSURE BOILER PLANT.
TIRUCHIRAPALLI–620014.

	NAME	SIGN	DATE	NO.OF VAR.
DRN	S.SOMASUNDARAM		01.01.75	—
CHD	SIVA SUBRAMANIAN		01.01.75	
APPD	R.K		01.01.75	

DCP No.	ALTD:	APPD:	DCP No.	ALTD:	APPD:
–	RPS	SSK	–	RPS	SSK
	CHD: MK	DT: 08.12.23		CHD: SAB	DT: 18.11.20

REV		REV	
12	DIM. h3 – 72 WAS 90 FOR SL. No. 8, 10, 12 & 13. RAW MATL. SIZE AND WEIGHTS UPDATED ACCORDINGLY.	11	SL. No. 14 INCLUDED.
ZONE –		ZONE –	

DEPT	SCALE	WEIGHT (KG).	REFERENCE INFORMATIONS	NO. OF ITEMS
VL	NTS			—
CODE 320				

TITLE	CARD CODE	DRAWING NO.	REV
DISK–STEM RETAINER	U 01	3–V–0000–02948	12

Size A3

ALL DIMENSIONS ARE IN MILLIMETRES. FOR TOLERANCES OF UNTOLERANCED DIMENSIONS DURING MANUFACTURE REFER RELEVANT QCP / QP.

DRAWING NO. 3-V-0000-04732

SL.No.	DRAWING No.	MATL. SPECN.	SUGGESTED SIZE	COMP. CODE	NET.Wt. / GROSS Wt.	HEAT TREATMENT / SCRAP SORT	MxP 6g	ØD2 H8	ØD1	ØD	H	h1	h2	W h11	ØD3	ØD4	h3					APPLICABLE TYPE No.
1	3-V-2691-04732/02	ASTM A182 Gr F6	ø100x77	931000900000	0.93 / 4.6	H&T / 40	64x4	44.3	58	86	38	10	8	75	64	46	72					6-C300-RV
2	3-V-2690-04732/02	ASTM A182 Gr F6	ø80x80	931002440000	0.82 / 3.15	H&T / 40	56x2	36.3	53	72	26	6	4	65	56	38	72					4-C300-RV
3	3-V-2692-04732/03	ASTM A182 Gr F6	ø100x60	931002490000	0.91 / 3.7	H&T / 40	72x4	52.3	66	100	39	10	8	90	72	54	55					8-C300-RV
4	3-V-P266-04732/02	X20Cr MOV 121	ø75x77	931045400000	0.82 / 2.67	H&T / 20	56x2	36.3	53	72	26	6	4	65	56	38	72					4-C300-RV
5	3-V-P569-04732/01	OHTARON	ø100x60	932024870000	0.91 / 3.7	Q & T / 40	72x4	52.3	66	100	39	10	8	90	72	54	55					8-C300-RV

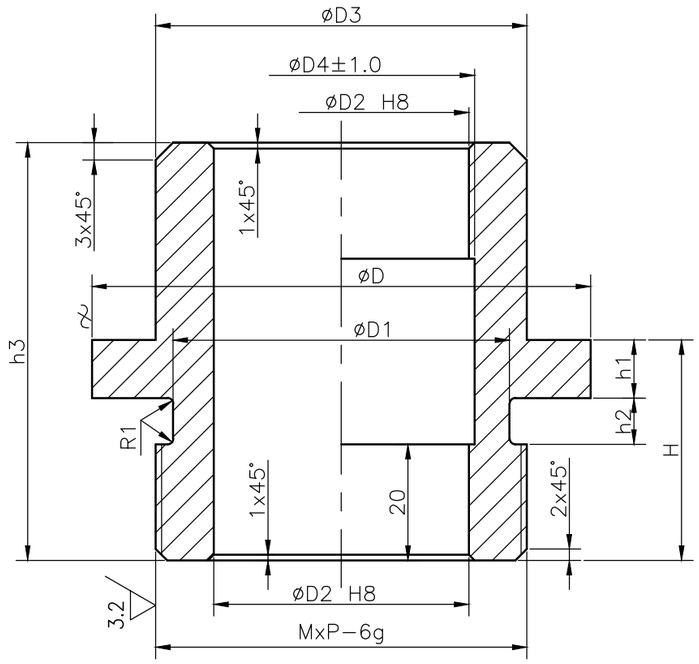

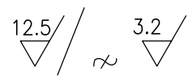

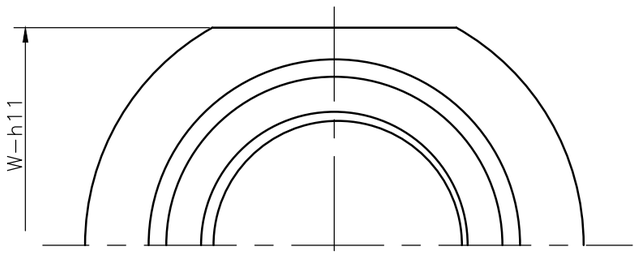

ABOVE INCLUDING	
50-80 h11	0.000 / -0.190
80-120 h11	0.000 / -0.220
30-50 h8	+0.039 / 0.000
50-80 h8	+0.046 / 0.000

NOTES:

1.HEAT TREAT TO 250BHN MIN.

NO OFF	DESCRIPTION	MATL CODE	MATL SPECN	HEAT TREATMENT	SCRAP SORT	NET WT (kg)	GROSS WT (kg)	DRAWING No	ITEM No
01	RETAINER*	--	--	--	--	--	--	--	--

REV	DATE	ALTERED	
06	12.11.12	T.R.R.MURTHY	
		CHD&APPD	SSK & KRS

DIMN.øD WAS øD1
DIMN.øD1 INCLUDED

REFER DCP:801397

REV	DATE	ALTERED	
05	17.08.11	T.R.R.MURTHY	
		CHD&APPD	SSK & MRK

SL. No.05 INCLUDED.

REV	DATE	ALTERED	
04	20.11.96	T.R.RAMAMURTHY	
		CHD & APPD	A.V.NATHAN

NOTES UPDATED

REFER DCN No. CS 0629

CAUTION: The information on this document is the property of BHARAT HEAVY ELECTRICALS LTD. It must not be used directly or indirectly in any way detrimental to the interest of the company.

TYPE OF PRODUCT OR NAME OF CUSTOMER/PROJECT

DRAWING REDRAWN WITH REV.06 ON 12.11.2012
(REFER DCN.GV0019,GV0039 &CS:0629)

BHARAT HEAVY ELECTRICALS LTD.,
UNIT: HIGH PRESSURE BOILER PLANT.
TIRUCHIRAPALLI-620014.

	NAME	SIGN	DATE	NO.OF VAR.
DRN	S.KANMANI		20.11.96	
CHD	T.R.R.MURTHY		20.11.96	
APPD	P.B.NATHAN		20.11.96	

DEPT	CODE	SCALE	WEIGHT (KG).	REFERENCE INFORMATIONS	NO. OF ITEMS
VL	320	N T S	--	CAD.REF.C304732	

TITLE	CARD CODE	DRAWING NO.	REV
DISK-STEM RETAINER	U 01	3-V-0000-04732	06

Size A3

ALL DIMENSIONS ARE IN MILLIMETRES. FOR TOLERANCES OF UNTOLERANCED DIMENSIONS DURING MANUFACTURE REFER RELEVANT QCP / QP.

DRAWING NO: 3-V-0000-06464

SL.NO	DRAWING NO.	COMP.CODE	MATL.SPECN.	SUGG.SIZE	SCRAP SORT	NET Wt	GROSS WT	DIMENSION										
								MdxP-6g	øD	øD1	øD2	øD3	øD4	H	H1	H2	H3	W-h11
01	3.V.2909.06464/01	931011090000	A182-F316 SH,CERTIFY	ø80X60	46	0.66	2.36	M56x2	72	53	$32^{+0.35}_{+0.10}$	56	34	55	26	6	4	65
02	3.V.P339.06464/01	931084020000		ø56X30		0.143	0.58	M42x2	52	39	$30^{+0.39}_{+0.30}$	42	–	25	20	5	4	46
03	3.V.P354.06464	931090510000	A182-F22 HT,CERTIFY	ø56X30	20	0.143	0.58	M42x2	52	39	$30^{+0.39}_{+0.30}$	42	–	25	20	5	4	46
04	3.V.2891.06464/02	931097580000	A182-F316 SH,CERTIFY	ø80X45	46	0.658	2.36	M56x2	72	53	$36.3^{+0.039}_{0}$	56	–	40	26	6	4	65
05	3.V.2895.06464/01	931097600000		ø80X80	46	0.890	3.14	M56x2	72	53	$36.3^{+0.039}_{0}$	56	38	@ 72	26	6	4	65
06	3.V.P725.06464	932052520000	SA182 GR.F60 SH,CERTIFY	ø80X80	46	0.890	3.14	M56x2	72	53	$36.3^{+0.039}_{0}$	56	38	72	26	6	4	65
07	3.V.P778.06464/02	932054640000	A351 CF3M SH,CERTIFY	92 203 888	46	0.66	2.59	M56x2	72	53	$36.3^{+0.039}_{0}$	56	38	@ 72	26	6	4	65
#08	3.V.UB18.06464	932062820000		92 206 268	46	0.143	0.53	M42x2	52	39	$30^{+0.39}_{+0.30}$	42	–	25	20	5	4	46
#09	3.V.UB19.06464/01	932062910000		92 206 269	46	0.658	1.47	M56x2	72	53	$36.3^{+0.039}_{0}$	56	–	40	26	6	4	65
#10	3.V.UB20.06464/01	932062960000		92 206 270	46	0.890	2.59	M56x2	72	53	$36.3^{+0.039}_{0}$	56	38	@ 72	26	6	4	65
11	3.V.P777.06464/01	932065380000		92 206 330	46	0.658	1.47	M56x2	72	53	$36.3^{+0.039}_{0}$	56	–	40	26	6	4	65
12	3.V.P883.06464	932067360000		92 206 400	46	0.143	0.53	M42x2	52	39	$30^{+0.39}_{+0.30}$	42	–	25	20	5	4	46

12.5 / 3.2

40.1–50 h11	0
	–0.160
50.1–80 h11	0
	–0.190
80.1–120 h11	0
	–0.220

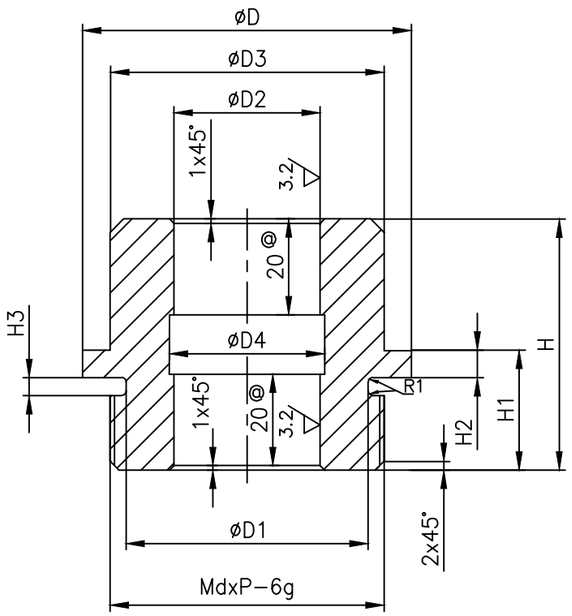

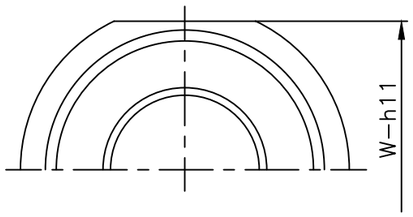

NOTES: –

01. # MARKED ITEMS IGC TEST SHALL BE CONDUCTED

02. @12.5 FOR SL. No. 02

DCP No.	ALTD: TS	APPD: MK
–	CHD: RPS	DT: 28.10.24
REV 10	SL. NO. 12 INCLUDED. IN SL.No. 08 3.V.UB18.06464 WAS 3.V.P883.06464.	
ZONE –		

DCP No.	ALTD: RPS	APPD: SSK
–	CHD: MK	DT: 26.09.23
REV 09	SL. NO. 11 INCLUDED. IN SL.No. 05, 07 & 10 DIMENSION H CHANGED TO 72.	
ZONE –		

DCP No.	ALTD: RPS	APPD: SSK
–	CHD: MK	DT: 20.10.22
REV 08	SL. NO. 08 TO 10 INCLUDED. NOTES INCLUDED.	
ZONE –		

CAUTION: The information on this document is the property of BHARAT HEAVY ELECTRICALS LTD. It must not be used directly or indirectly in any way detrimental to the interest of the company.

NO OFF	DESCRIPTION	MATL CODE	MATL SPECN	HEAT TREATMENT	SCRAP SORT	NET WT (kg)	GROSS WT (kg)	DRAWING No. / COMP. CODE	ITEM No

TYPE OF PRODUCT
OR NAME OF
CUSTOMER/PROJECT

BHARAT HEAVY ELECTRICALS LTD.,
UNIT: HIGH PRESSURE BOILER PLANT.
TIRUCHIRAPALLI-620014.
365-191
02.03.2021

	NAME	SIGN	DATE	NO.OF VAR.
DRN	R.P.SINGH		23.06.20	—
CHD	SAMEER BHAT		23.06.20	
APPD	S.SATHEES		23.06.20	

DEPT	SCALE	WEIGHT (KG).	REFERENCE INFORMATIONS	NO. OF ITEMS
VL	NTS	REFER TABLE		—
CODE 320				

TITLE	CARD CODE	DRAWING NO.	REV
RETAINER	U 01	3-V-0000-06464	10

Size A3

ALL DIMENSIONS ARE IN MILLIMETRES. FOR TOLERANCES OF UNTOLERANCED DIMENSIONS DURING MANUFACTURE REFER RELEVANT QCP / QP.

DRAWING NO. 3-V-0000-20702/1

12.5 / 3.2

ø18 TO 30 h8	0 / −0.033

SL. No.	DRAWING NO.	RAW MATERIAL				STEM DIA.	DIMENSIONS					FINISHED WT (KG)	TOA DRAWING NO.	COMP. CODE
		SPECN.	SUGGESTED SIZE	CODE	WT (KG)		D	H	h					
01	3-V-0001-20702/1	STELLITE-6	ø 26X12	–	0.050	30 TO 42	18	8	2			0.014	T-48940-3	93 113 469 0000
02	3-V-0002-20702/1		ø 26X14	–	0.058	44 TO 52	24	10	2			0.033	T-48940-4	93 113 470 0000

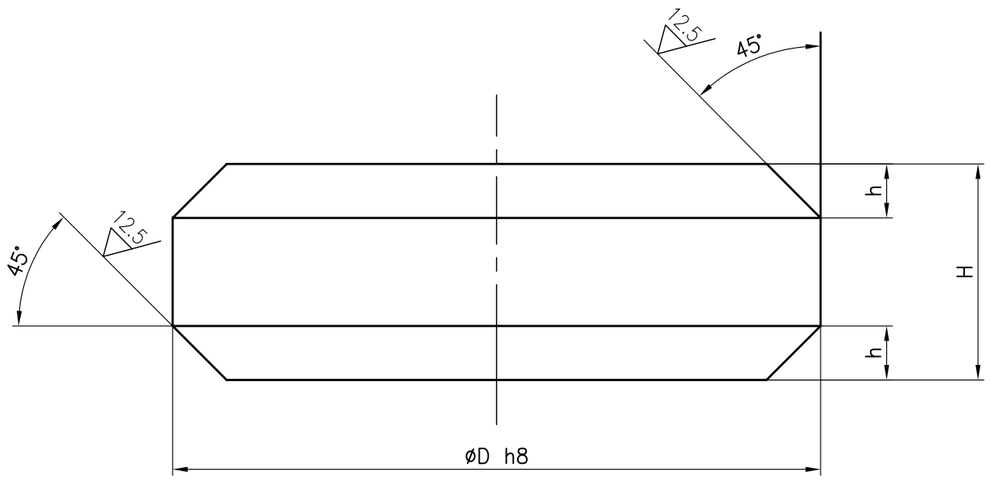

REDRAWN WITH REV.1 ON 12.04.08

NO OFF	DESCRIPTION	MATL CODE	MATL SPECN	HEAT TREATMENT	SCRAP SORT	NET WT (kg)	GROSS WT (kg)	DRAWING No	ITEM No

TYPE OF PRODUCT OR NAME OF CUSTOMER/PROJECT: TA

BHARAT HEAVY ELECTRICALS LTD.
UNIT: HIGH PRESSURE BOILER PLANT.
TIRUCHIRAPALLI _620014.
365-121

	NAME	SIGN	DATE	NO.OF VAR.
DRN	V.BAIRAVAN		12.04.08	
CHD	K.RAJASEKARAN		12.04.08	
APPD	M.RAJAKUMAR		12.04.08	

DEPT	SCALE	WEIGHT (KG).	REFERENCE INFORMATIONS	NO. OF ITEMS
VL	N T S			
CODE 320				

TITLE	CARD CODE	DRAWING NO.	REV
DISC WASHER	U 01	3-V-0000-20702	1

REV	DATE	ALTERED VB
1	12.04.08	CHD & APPD KRS&MRK

DRAWING CONVERTED INTO SOFT COPY

DCP No.800813

CAUTION: The information on this document is the property of BHARAT HEAVY ELECTRICALS LTD. It must not be used directly or indirectly in any way detrimental to the interest of the company.

Size A3

ALL DIMENSIONS ARE IN MILLIMETRES. FOR TOLERANCES OF UNTOLERANCED DIMENSIONS DURING MANUFACTURE REFER RELEVANT QCP / QP.

DRAWING NO. 3-V-0000-09398

SL. No.	DRAWING No.	COMPONENT CODE	RAW MATERIAL DETAILS				SCRAP SORT	DIMENSIONS				WT. IN Kgs.
			SUGG. SIZE	SPECN.	HEAT TREAT.	WT. (Kgs)		øD	H	W	THREAD	
01.	3-V-S833-09398/01	93 059 604 0000	ø56 x 20	SA 105 CERTIFY	NR	0.39	10	56	14	50	M36X2	0.15
02.	3-V-S836-09398/01	93 103 470 0000	ø80 x 26	SA 105 CERTIFY	NR	1.03	10	80	20	70	M52X2	0.44
03.	3-V-S837-09398/01	93 103 471 0000	ø100 x 27	SA 105 CERTIFY	NR	1.66	10	100	21	90	M60X2	0.92
04.	3-V-S843-09398/01	93 108 304 0000	ø100 x 20	SA 105 CERTIFY	NR	1.23	10	100	14	90	M64X2	0.57
05.	3-V-S860-09398/01	93 103 629 0000	ø70 x 20	SA 105 CERTIFY	NR	0.60	10	70	14	60	M45X2	0.23
06.	3-V-S863-09398/01	93 103 637 0000	ø80 x 20	SA 105 CERTIFY	NR	0.79	10	80	14	70	M56X2	0.27
07.	3-V-C036-09398/01	93 105 086 0000	ø100 x 20	SA 105 CERTIFY	NR	1.23	10	100	14	90	M56X2	0.59
08.	3-V-F502-09398	93 109 834 0000	ø70 x 20	SA 105 CERTIFY	NR	0.60	10	70	14	60	M42X2	0.25
09.	3-V-F508-09398	93 130 294 0000	ø100 x 27	SA 105 CERTIFY	NR	1.66	10	100	21	90	M64X2	0.91
10.	3-V-F501-09398/02	93 202 638 0000	ø56 x 20	SA 105 CERTIFY	NR	0.39	10	56	14	50	M39X2	0.13
11.	3-V-NK32-09398	93 205 365 0000	ø56 x 31	SA 182 F60 CERTIFY	SH	0.60	46	56	14	50	M36X2	0.15

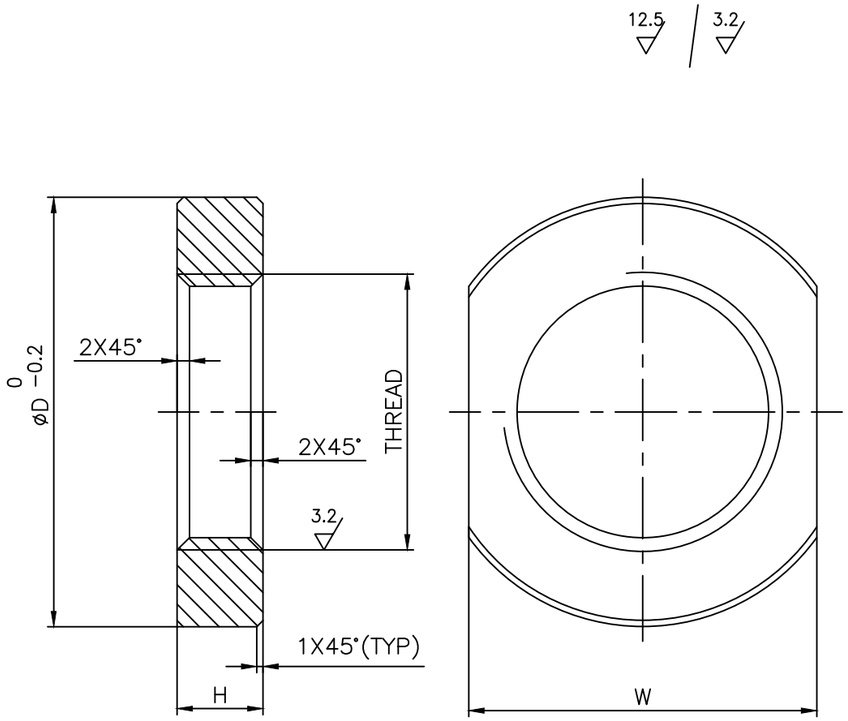

NO OFF	DESCRIPTION	MATL CODE	MATL SPECN	HEAT TREATMENT	SCRAP SORT	NET WT (kg)	GROSS WT (kg)	DRAWING No	ITEM No
–	–	–	–	–	–	–	–	–	–

REV	DATE	ALTERED	
08	23.08.19	ALTERED	R.P.SINGH
		CHD & APPD	SSK & KRS
		SL.No. 11 INCLUDED	
07	09.10.14	ALTERED	A.MARIMUTHU
		CHD & APPD	MS & SSK
		IN SL. No. 10 DIMENSION CHANGED.	
06	25.08.14	ALTERED	A.MARIMUTHU
		CHD & APPD	MS & SSK
		IN SL. No. 10 THREAD M39X2 WAS M52X2	
		DCP:801801	

CAUTION: The information on this document is the property of BHARAT HEAVY ELECTRICALS LTD. It must not be used directly or indirectly in any way detrimental to the interest of the company.

TYPE OF PRODUCT
OR NAME OF
CUSTOMER/PROJECT

BHARAT HEAVY ELECTRICALS LTD.,
UNIT: HIGH PRESSURE BOILER PLANT.
TIRUCHIRAPALLI-620014.
365-121

	NAME	SIGN	DATE	NO.OF VAR.
DRN	M.SRINIVASAN		18.04.06	
CHD	P.BOOMINATHAN		18.04.06	
APPD	P.BOOMINATHAN		18.04.06	

DEPT	CODE	SCALE	WEIGHT (KG).	REFERENCE INFORMATIONS	NO. OF ITEMS
VL	320	NTS	REF.TABLE	CAD :C309398	

TITLE	CARD CODE	DRAWING NO.	REV
RETAINER	U 01	3-V-0000-09398	08

Size A3

SL NO.	DRAWING NO.	COMP-CODE	MATL-SPECIFICATION	SUGGESTED SIZE	MATERIAL CODE	GROSS WT	SCRAP SORT	DIMENSIONS ϕD	T	W	C				MDIXP-6H	NET WT(KG)		
14	3-V-2455-03067	–	~~IS 1875 CL3~~ SA105,	ϕ 50 X 20	15339142 ~~15026011~~	0.30	10	45	15	41	1.5				30 X 1.5	0.16		14
15	3-V-2456-03067	–	NORMALISED, CERTIFY					50		46					36 X 1.5	0.13		15
16	3-V-0124-03067	–	~~IS 1875 CL 3~~ SA105, NORMALISED, CERTIFY	ϕ 80 X 20	~~15026432~~ 15339144	0.79	10	70	18	60	1.5				42 X 1.5	0.35		16
17	3-V-1217-03067	–	SA105, ~~IS 1875 CL3~~ CERTIFY, NORMALISED	ϕ125 X 25	~~15026445~~ 15339281	2.41	10	110	20	95	2				72 X 2	1.23		17
18	3-V-K 585-03067	93 105 398 0000	SA105, NR, CERTIFY	Ø100 X 35	15339134	2.2	10	100	28	80	2				68 X 2	0.9		18
19																		19
20																		20
21																		21
22																		22
23																		23
24																		24
25																		25
26																		26
27																		27
28																		28

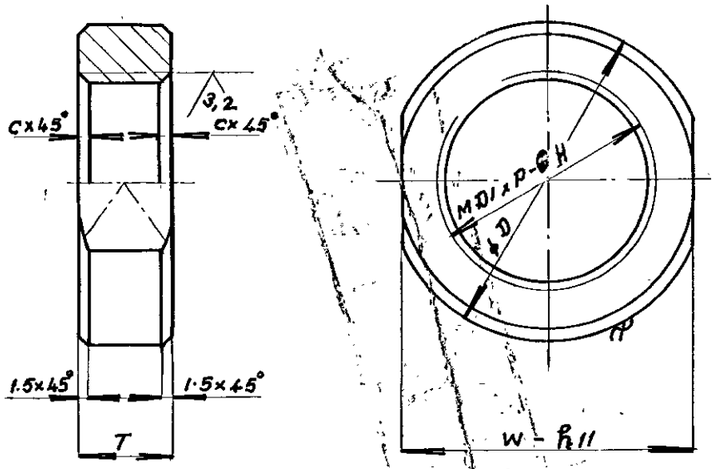

12.5 / 3.2 /

DIMENSION ABOVE	UP TO & INCLUDING	h11
30	50	0 / -0.160
@ 80	120	0 / -0.220

NOTE: UP TO SL. No 13 REFER DRAWING No 3-V-0000-02996

MICROFILMED ON ROLL 00 5416 FRAME 335

MICROFILMED ON ROLL FRAME

BHARAT HEAVY ELECTRICALS LTD.,
BOILER PLANT UNIT, TIRUCHIRAPALLI-14

FIRST ANGLE	SCALE				
	NTS	DRAWN	P. Rathinakumar	TOTAL wt. (KG)	
		CHECKED	K. BASHYAM.	TYPE 4/7	
		APPROVED	R. KRISHNAMURTHY.		
ALL DIMENSIONS IN MILLIMETRES		DATE	23·6·1975	NEW/OLD DRG. No.	

TITLE: RETAINER

CAUTION

THE INFORMATION CONTAINED IN THIS DRAWING IS THE PROPERTY OF BHARAT HEAVY ELECTRICALS LIMITED., BOILER PLANT UNIT, TIRUCHY-620 014. AND SHALL NOT BE USED WITHOUT THEIR EXPRESS WRITTEN PERMISSION IN ANY FORM OR PART THEREOF FOR ANY OTHER PURPOSE THAN FOR WHICH IT IS SENT TO YOU.

05-229

DRAWING No. 3-V-0000-03067

REVISION 02

REV	DATE			DATE	
02	3-12-94	ALTD: S.S.	01	22-4-76	ALTERED 22/4/76
		CHED: M.R.K.			CHECKED S.K.

SL-No 18 INCLUDED

ZONE @ TOLERANCE FOR 80-120 h11 INCLUDED

ALL DIMENSIONS ARE IN MILLIMETRES.

FOR TOLERANCES OF UNTOLERANCED DIMENSIONS DURING MANUFACTURE REFER RELEVANT QCP/QP

REV	DATE	ALTERED
		CHD & APPD

CAUTION: The information on this document is the property of BHARAT HEAVY ELECTRICALS LTD. It must not be used directly or indirectly in any way detrimental to the interest of the company.

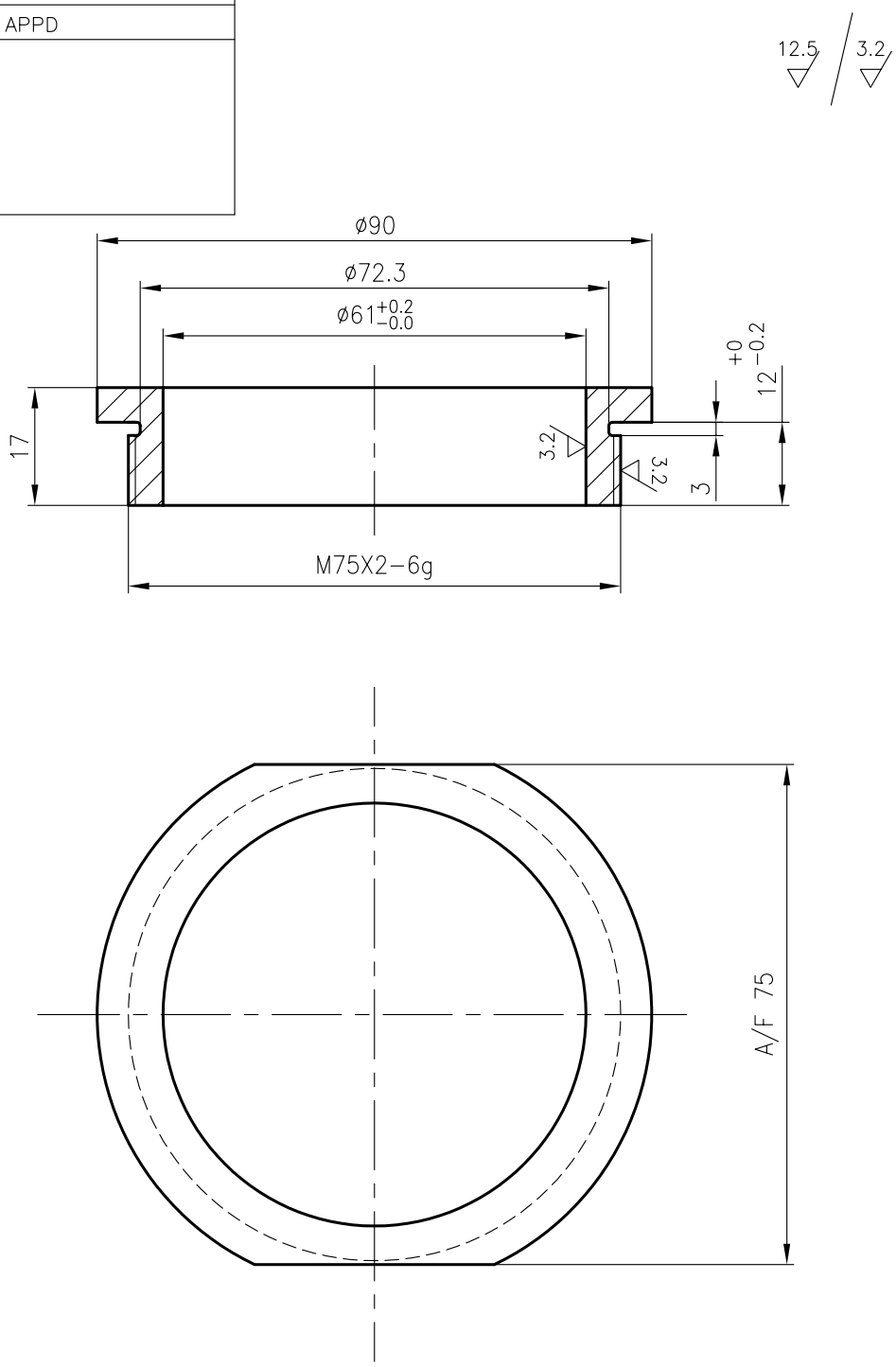

NO OFF	DESCRIPTION	MATL CODE	MATL SPECN	HEAT TREATMENT	SCRAP SORT	NET WT (kg)	GROSS WT (kg)	DRAWING No	ITEM No
--	SUGG.SIZE ø100X25	--	SA105 CERTIFY	NR	10	0.40	0.94	--	--

BHARAT HEAVY ELECTRICALS LTD.,
UNIT: HIGH PRESSURE BOILER PLANT.
TIRUCHIRAPALLI 620014.
365-122

	NAME	SIGN	DATE	NO.OF VAR
DRN	K.P.LEON		03.01.06	
CHD	P.BOOMINATHAN		03.01.06	
APPD	M.RAJAKUMAR		03.01.06	

DEPT VL / CODE			SCALE	WEIGHT (KG).	REFERENCE INFORMATIONS	NO. OF ITEMS
			NTS	0.40	COMP.CODE:931306740000 CAD:C426608	

TITLE	CARD CODE	DRAWING NO.	REV
RETAINER	U 01	4-V-N207-26608	00

Size A4

ALL DIMENSIONS ARE IN MILLIMETRES.

FOR TOLERANCES OF UNTOLERANCED DIMENSIONS DURING MANUFACTURE REFER RELEVANT QCP/QP

DCP No.	ALTD: R.P.SINGH	APPD: KRS	DCP No.	ALTD: R.P.SINGH	APPD: SATHEES
802634	CHD: SSK	DT: 07.08.19		CHD: SAMEER	DT: 20.04.21

REV		REV	
01	SL. No. 02 INCLUDED. NET WT. UPDATED.	02	DIMN $\phi 100^{0}_{-0.2}$ WAS $100^{0}_{-0.2}$
ZONE		ZONE	

12.5 / 3.2

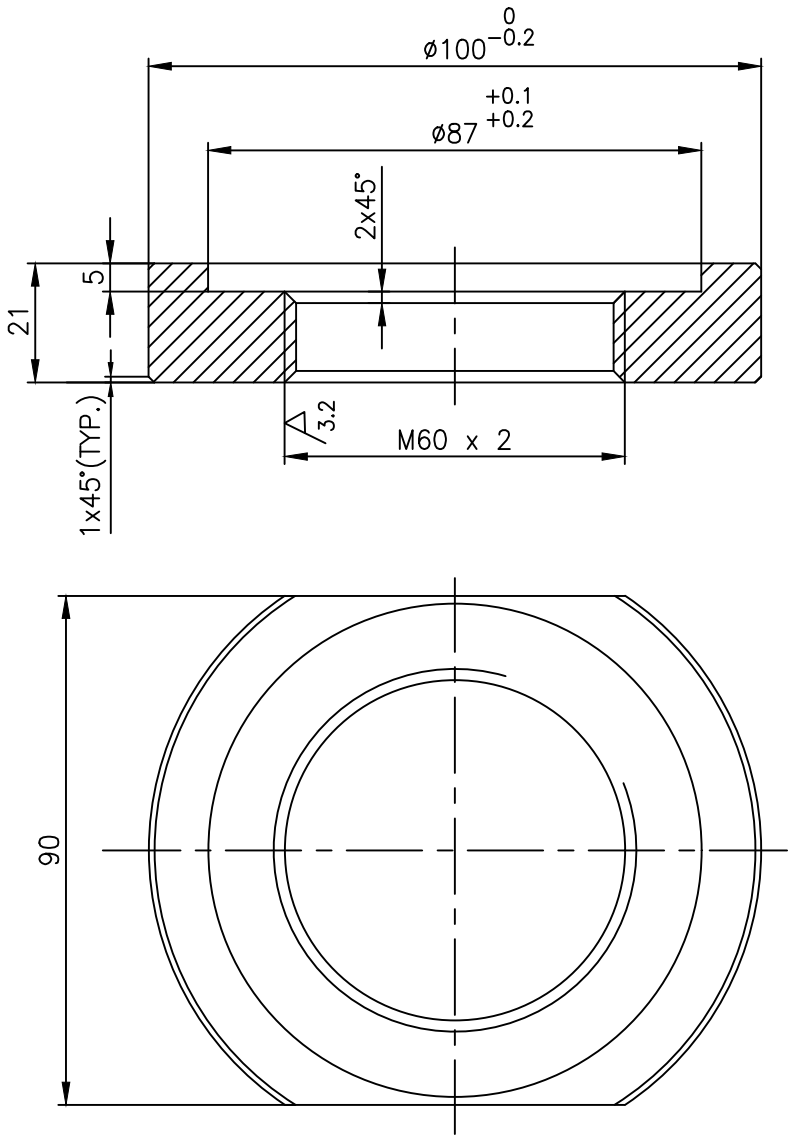

NO OF	DESCRIPTION	MATL CODE	MATL SPECN	HEAT TREATMENT	SCRAP SORT	NET WT (kg)	GROSS WT (kg)	DRAWING No. / COMP. CODE	ITEM No
02	SUGG.SIZE:- ø110 x 27	–	ASTM A182 F60 CERTIFY	SH	46	0.89	1.66	4-V-NP35-26590/1 / 93 205 367 0000	--
01	SUGG.SIZE:- ø105 x 27	–	ASTM A105 CERTIFY	NR	10	0.89	1.66	4-V-N244-26590/1 / 93 130 606 0000	--

BHARAT HEAVY ELECTRICALS LTD.,
UNIT: HIGH PRESSURE BOILER PLANT.
TIRUCHIRAPALLI 620014.
365-192
02.03.2021

	NAME	SIGN	DATE	NO.OF VAR
DRN	A.S.PANDY		07.07.07	
CHD	T.R.RAMAMURTHY		07.07.07	—
APPD	P.BOOMINATHAN		07.07.07	

DEPT	SCALE	WEIGHT (KG).	REFERENCE INFORMATIONS	NO. OF ITEMS
VL	NTS	0.72	CAD REF. C426590	—
CODE 320				

TITLE	CARD CODE	DRAWING NO.	REV
RETAINER	U 01	4-V-0000-26590	02

Size A4

CAUTION: The information on this document is the property of BHARAT HEAVY ELECTRICALS LTD. It must not be used directly or indirectly in any way detrimental to the interest of the company.

ALL DIMENSIONS ARE IN MILLIMETRES.

FOR TOLERANCES OF UNTOLERANCED DIMENSIONS DURING MANUFACTURE REFER RELEVANT QCP/QP

REV	DATE	ALTERED M.RAMESH
06	12.07.14	CHD & APPD SSK&KRS

IN DRAWING No:

4.V.P560.90790 DIMENSIONS

79 WAS 50

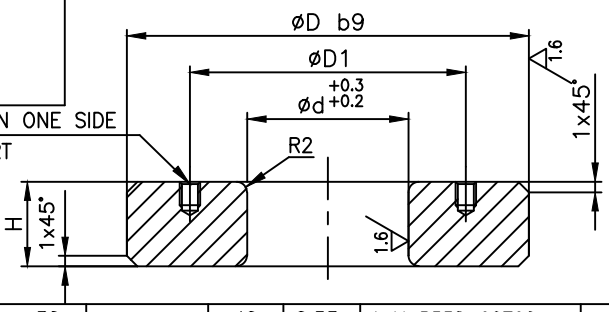

øD	b9
30 to 40	−0.170 / −0.232
40 to 50	−0.180 / −0.242
50 to 65	−0.190 / −0.264
65 to 80	−0.200 / −0.278
80 to 100	−0.220 / −0.304

SL No.	øD	øD1	ød	H	SUGGESTED MIN.SIZE	MATERIAL SPECEN.	SCRAP SORT	NET WT (kg)	DRAWING NUMBER	COMP CODE	ITEM No
	DIMENSIONS										
30	96	83	70	20	ø100 x 30	ASTM A276 Gr.410 CERTIFY, NT	40	0.53	4–V–P538–90790	932024180000	––
29	87	74.5	62	71	ø90 x 79		40	1.627	4–V–P560–90790/01	932023960000	––
28	79	67	55	40	ø80 x 50		40	0.790	4–V–P476–90790	931309130000	––
27	79	67	55	60	ø80 x 70		40	1.185	4–V–P366–90790/01	931306180000	––
26	40	32	24	20	ø45 x 25		40	0.040	4–V–2477–90790	931305020000	––
25	64	54	44	15	ø68 x 23		40	0.043	4–V–2925–90790	931079520000	––
24	64	54	44	8	ø68 x 17		40	0.043	4–V–2930–90790	931079510000	––
23	52	44	36	16.5	ø55 x 25		40	0.043	4–V–2928–90790	931079500000	––
22	52	44	36	7.5	ø55 x 16		40	0.043	4–V–2927–90790	931079490000	––
21	44	36	28	10.5	ø50 x 18		40	0.043	4–V–2923–90790	931079480000	––
20	44	36	28	5.5	ø50 x 13		40	0.043	4–V–2890–90790	931079470000	––
19	50	41	32	27	ø55 x 34		40	0.043	4–V–B303–90790	931079460000	––
18	50	41	32	6	ø55 x 13		40	0.043	4–V–B103–90790	931079450000	––
17	44	36	28	15.5	ø50 x 23		40	0.043	4–V–B302–90790	931079440000	––
16	44	36	28	4	ø50 x 11		40	0.043	4–V–B102–90790	931079430000	––
15	61.1	51	41.275	10.5	ø63 x 18		40	0.043	4–V–N628–90790	931079420000	––
14	61.1	51	41.275	3.5	ø63 x 11		40	0.043	4–V–N239–90790	931079410000	––
13	61.1	51	41.275	8	ø63 x 15		40	0.1	4–V–N382–90790	931079400000	––
12	51.6	43	34.925	12	ø55 x 19		40	0.106	4–V–N244–90790	931079390000	––
11	51.6	43	34.925	4	ø55 x 11		40	0.035	4–V–N399–90790	931079380000	––
10	48.4	40	31.75	18	ø52 x 25		40	0.148	4–V–N340–90790	931079370000	––
09	38.9	32	25.4	7.5	ø45 x 15		40	0.04	4–V–N324–90790	931079360000	––
08	35.7	29	22.225	10.5	ø40 x 18		40	0.05	4–V–N326–90790	931079350000	––
07	57.9	48	38.1	5	ø63 x 12		40	0.058	4–V–N392–90790	931079340000	––
06	51.6	43	34.925	10	ø55 x 17		40	0.088	4–V–N362–90790	931079330000	––
05	48.4	40	31.75	12	ø52 x 20		40	0.098	4–V–N325–90790	931079320000	––
04	45.2	37	28.575	20	ø50 x 27		40	0.15	4–V–N219–90790	931079310000	––
03	38.9	32	25.4	9.5	ø45 x 17		40	0.05	4–V–N318–90790	931079300000	––
02	32.5	28	19.05	11	ø36 x 18		40	0.05	4–V–N259–90790	931079290000	––
01	32.5	28	19.05	3	ø36 x 10		40	0.013	4–V–N434–90790	931079280000	––

BHARAT HEAVY ELECTRICALS LTD.,
UNIT: HIGH PRESSURE BOILER PLANT.
TIRUCHIRAPALLI 620014.

365–122 CM

	NAME	SIGN	DATE	NO.OF VAR
DRN	T.R.R.MURTHY		17.04.97	
CHD	N.DHANAPAL		17.04.97	
APPD	A.VISWANATHAN		17.04.97	

DEPT	SCALE	WEIGHT (KG).	REFERENCE INFORMATIONS	NO. OF ITEMS
VL / CODE 320	NTS	REF.TABLE	CAD: C490790	

TITLE	CARD CODE	DRAWING NO.	REV
SPACER	U 01	4–V–0000–90790	06

Size A4

CAUTION: The information on this document is the property of BHARAT HEAVY ELECTRICALS LTD. It must not be used directly or indirectly in any way detrimental to the interest of the company.

ALL DIMENSIONS ARE IN MILLIMETRES.

FOR TOLERANCES OF UNTOLERANCED DIMENSIONS DURING MANUFACTURE REFER RELEVANT QCP/QP

REV	DATE	ALTERED	REV	DATE	ALTERED
01	04.03.13	ARUN CHD & APPD MRAJAK	02	11.03.13	GANESH CHD & APPD MRAJAK
	Serial no 05 & 06 Added.			DIMENSION H OF SL. NO.3: 99.6 WAS 76.4 DCP: 801461	

6.3 / 1.6 / 3.2

øD	b9
80 to 100	−0.220
	−0.304
100 to110	−0.240
	−0.327

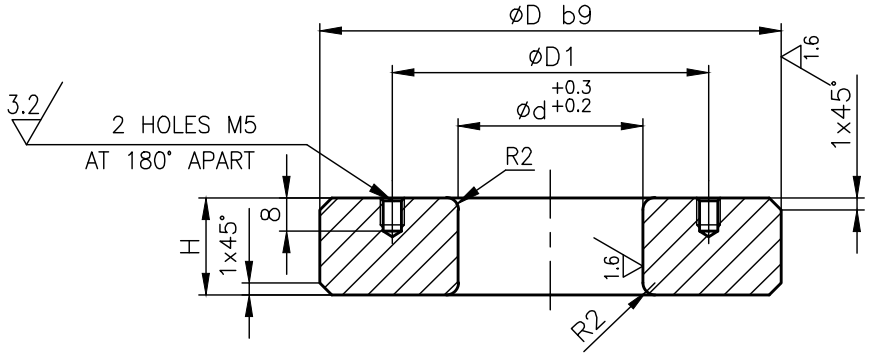

SL No.	øD	øD1	ød	H	SUGGESTED MIN.SIZE	MATERIAL SPECEN.	SCRAP SORT	NET WT (kg)	DRAWING NUMBER	COMP CODE	ITEM No
	DIMENSIONS										
06	96	83.3	70.5	147	ø100 x 150	ASTM A276 Gr.410 CERTIFY, NT	40	3.89	4−V−NH55−27002	932028830000	
05	106	90	76	160	ø110 x 170		40	5.46	4−V−NH56−27002	932029010000	
04	106	90	76	117	ø110 x 120		40	3.93	4−V−NH53−27002	932028570000	
03	106	90	76	99.6	ø110 x 50		40	3.3	4−V−NH50−27002/1	932028400000	
02	106	90	76	52	ø110 x 55		40	1.75	4−V−NH52−27002	932028050000	
01	93	80	70	50.8	ø95 x 55		40	1.2	4−V−NH51−27002	932027820000	

BHARAT HEAVY ELECTRICALS LTD.,
UNIT: HIGH PRESSURE BOILER PLANT.
TIRUCHIRAPALLI 620014.
365−122 CM

	NAME	SIGN	DATE	NO.OF VAR
DRN	ARUN		23.11.12	
CHD	MRAJAK		23.11.12	
APPD	MRAJAK		23.11.12	

DEPT	SCALE	WEIGHT (KG).	REFERENCE INFORMATIONS	NO. OF ITEMS
VL	NTS	REF.TABLE	CAD: C490790	
CODE 320				

TITLE	CARD CODE	DRAWING NO.	REV
SPACER	U 01	4−V−0000−27002	02

Size A4

The information on this document is the property of BHARAT HEAVY ELECTRICALS LTD. It must not be used directly or indirectly in any way detrimental to the interest of the company.

ALL DIMENSIONS ARE IN MILLIMETRES.

FOR TOLERANCES OF UNTOLERANCED DIMENSIONS DURING MANUFACTURE REFER RELEVANT QCP/QP

REV	DATE	ALTERED	R.P.SINGH
06	07.11.19	CHD & APPD	SAMEER & SSK

SL.No. 12 INCLUDED

CAUTION: The information on this document is the property of BHARAT HEAVY ELECTRICALS LTD. It must not be used directly or indirectly in any way detrimental to the interest of the company.

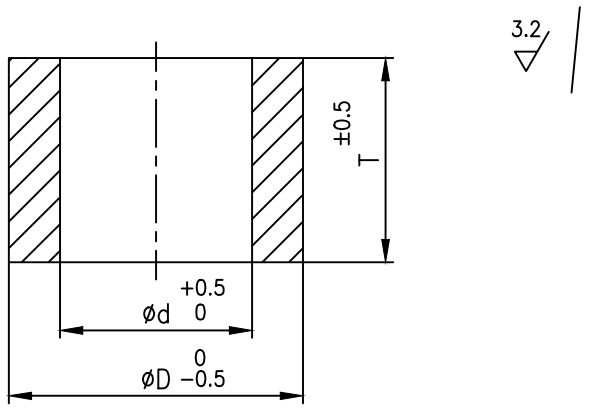

SL.No.	DRAWING No. / COMPONENT CODE	SPECN.	CODE	SUGG. SIZE	HEAT TREAT	WT.IN Kgs.	SCRAP SORT	ØD	Ød	T	WT. (Kgs)
		RAW MATL DETAIL						DIMENSIONS			
12	4.V.F810.06937 / 93 205 641 0000	A182−F316 CERTIFY	−	DIA 40x52	SH	0.51	46	38.90	25.40	48.0	0.26
11	4.V.F921.06937 / 93 203 217 0000	A276−410 CERTIFY	−	DIA 40x52	NORMALISED & TEMPERED	0.51	40	38.90	25.40	48.0	0.26
10	4.V.F889.06937 / 93 202 270 0000	A276−410 CERTIFY	−	DIA 63x62	NORMALISED & TEMPERED	1.60	40	61.10	41.30	58.0	0.80
09	4.V.F510.06937 / 93 201 618 0000	A276−410 CERTIFY	−	DIA 76x80	NORMALISED & TEMPERED	2.9	40	73.8	50.8	76.0	1.3
08	4.V.F520.06937 / 93 130 534 0000	A276−410 CERTIFY	−	DIA 38x50	NORMALISED & TEMPERED	0.45	40	35.70	22.23	42	0.20
07	4.V.F507.06937 / 93 167 191 0000	A182−F6 CERTIFY	−	DIA 76x80	NORMALISED & TEMPERED	2.90	40	73.80	50.80	76.0	1.30
06	4.V.F506.06937 / 93 167 190 0000	A182−F6 CERTIFY	−	DIA 70x70	NORMALISED & TEMPERED	2.10	40	67.50	47.60	65.0	0.90
05	4.V.F505.06937 / 93 167 189 0000	A182−F6 CERTIFY	−	DIA 63x62	NORMALISED & TEMPERED	1.60	40	61.10	41.30	58.0	0.80
04	4.V.F504.06937 / 93 167 188 0000	A182−F6 CERTIFY	−	DIA 60x70	NORMALISED & TEMPERED	1.60	40	57.90	38.10	66.0	0.80
03	4.V.F503.06937 / 93 167 092 0000	A182−F6 CERTIFY	−	DIA 47x58	NORMALISED & TEMPERED	0.80	40	45.20	28.60	54.0	0.41
02	4.V.F502.06937 / 93 167 091 0000	A182−F6 CERTIFY	−	DIA 40x52	NORMALISED & TEMPERED	0.51	40	38.90	25.40	48.0	0.26
01	4.V.F501.06937 / 93 110 776 0000	A182−F6 CERTIFY	−	DIA 38x50	NORMALISED & TEMPERED	0.45	40	35.70	22.23	42	0.20

NO OF	DESCRIPTION	MATL CODE	MATL SPECN	HEAT TREATMENT	SCRAP SORT	NET WT (kg)	GROSS WT (kg)	DRAWING No	ITEM No
−	−	−	−	−	−	−	−	−	−

BHARAT HEAVY ELECTRICALS LTD.,
UNIT: HIGH PRESSURE BOILER PLANT.
TIRUCHIRAPALLI 620014.
365−122

	NAME	SIGN	DATE	NO.OF VAR
DRN	M.SRINIVASAN		10.03.03	
CHD	P.BOOMINATHAN		10.03.03	
APPD	K.SAKETHARAMAN		10.03.03	

DEPT	CODE	SCALE	WEIGHT (KG).	REFERENCE INFORMATIONS	NO. OF ITEMS
VL	320	NTS	REF TABLE	DRG RETRACED WITH REV.05 ON 29.10.13 CAD C406937	

TITLE	CARD CODE	DRAWING NO.	REV
SPACER	U 01	4−V−0000−06937	06

Size A4

ALL DIMENSIONS ARE IN MILLIMETRES. FOR TOLERANCES OF UNTOLERANCED DIMENSIONS DURING MANUFACTURE REFER RELEVANT QCP / QP.

DRAWING NO: 3-V-0000-17935

6.3 / 1.6

SL. NO.	DRAWING NO.	COMP. CODE	SUGG.MIN. SIZE	MATL. SPECN.	GROSS WT(kg)	ØD b9	Ød +0.3 0	H	ØD1	NET WT(kg)
01	3-V-B673-17935/1	931082690000	ø85X85	A276-410, NT, CERTIFY	3.8	80	52.5	73	66	1.6
02	3-V-N596-17935/1	931082700000	ø70X65		2.0	64.3	45	55	54	0.7
03	3-V-N597-17935/1	931082710000	ø80X30		1.2	73.8	51.3	22	62	0.4
04	3-V-N599-17935/1	931082720000	ø70X30		0.9	64.3	45	19	54	0.3
05	3-V-B104-17935/1	931082800000	ø65X60		1.5	59	40.5	47	49	0.7
06	3-V-N653-17935/1	931082820000	ø75X40		1.4	67.5	48.1	30	57	0.4
07	3-V-C545-17935/1	931083100000	ø75X110		3.8	68	48.5	102	58	1.5
08	3-V-N702-17935/2	931085310000	ø70X60		1.8	61.1	41.8	45	51	0.6
09	3-V-N705-17935/1	931085360000	ø90X50		2.5	83.3	57.7	42	70	0.9
10	3-V-C520-17935/1	931085320000	ø56X40		0.8	48	32.5	32	40	0.3
11	3-V-C524-17935/1	931085330000	ø65X50		1.3	60	40.5	40	50	0.5
12	3-V-C526-17935/1	931085340000	ø70X60		1.8	64	44.5	50	54	0.7
13	3-V-C528-17935/1	931085350000	ø75X70		2.4	68	48.5	60	58	0.8
14	3-V-B687-17935/1	931090980000	ø80X90		3.6	74	48	78	61	1.5
15	3-V-K963-17935/1	931092170000	ø70X60	A182-F316 SH, CERTIFY.	1.8	61.1	41.8	45	51	0.6
16	3-V-K964-17935/1	931092180000	ø70X65		2.0	64.3	45	55	54	0.7
17	3-V-K965-17935/1	931092190000	ø80X30		1.2	73.8	51.3	22	62	0.4
18	3-V-K966-17935/1	931092200000	ø90X50		2.5	83.3	57.7	42	70	0.9
19	3-V-U013-17935/1	931098700000	ø75X60	A276-410, NT, CERTIFY	2.1	67.5	48.1	46	57	0.6
20	3-V-U123-17935/1	931103130000	ø85X50		2.3	77	54.5	36	65	0.7
21	3-V-N799-17935/1	931106950000	ø90X70		3.5	83.3	57.7	62	70	1.4
22	3-V-N147-17935/1	931304060000	ø112X70		5.4	105.6	76.2	57	90	1.9
23	3-V-N625-17935/1	931305240000	ø70X40		1.2	61.1	41.8	25	51	0.3
24	3-V-N629-17935/1	931305250000	ø70X50		1.5	64.3	45	35	54	0.45
25	3-V-N727-17935/1	931305260000	ø75X40		1.4	67.5	48.1	26	57	0.35
26	3-V-N157-17935/1	931305270000	ø112X90		7.0	105.6	76.7	79	90	2.5
27	3-V-C538-17935/1	931305350000	ø115X70		7.4	108.0	79.8	60	93	2.0
28	3-V-NE96-17935/1	932011920000	ø88X30		1.4	86.5	60.8	20	73	0.46
29	3-V-NF97-17935/1	932017660000	ø100X45		2.77	96.0	70.8	36	83	0.93

SL. NO.	DRAWING NO.	COMP. CODE	SUGG.MIN. SIZE	MATL. SPECN.	GROSS WT(kg)	ØD b9	Ød +0.3 0	H	ØD1	NET WT(kg)
30	3-V-ND10-17935	932031320000	ø47X26	A182 F316 SH, CERTIFY	0.35	45.2	28.575	21	36	0.16
31	3-V-ND15-17935	932031330000	ø50X25		0.39	48.4	31.75	20	39	0.16
32	3-V-ND13-17935	932031340000	ø53X25		0.43	51.6	34.925	20	42	0.18
33	3-V-ND23-17935	932031350000	ø59X25		0.54	57.9	38.1	20	47	0.23
34	3-V-ND21-17935	932031360000	ø63X25		0.61	61.1	41.275	20	51	0.32
35	3-V-NP33-17935	932042200000	ø47X26	SNIK AG, CERTIFY	0.35	45.2	28.575	21	36	0.16
36	3-V-NJ95-17935	932042210000	ø70X60		1.8	61.1	41.8	45	51	0.6
37	3-V-NL92-17935	932062360000	ø90X70	A182 F316 SH, CERTIFY	3.5	83.3	57.7	62	70	1.4

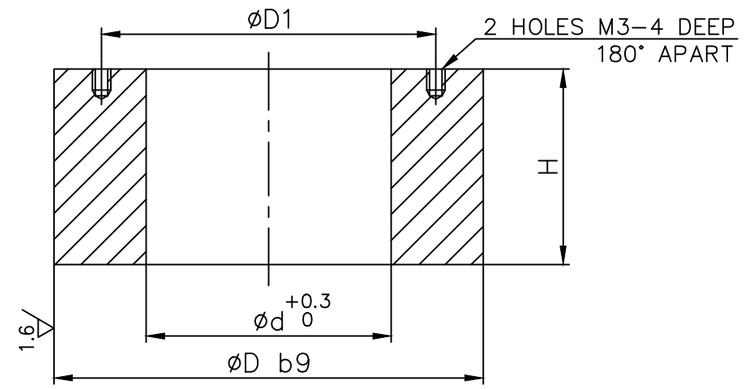

ø40-50	b9	-0.180 / -0.242
ø50-65	b9	-0.190 / -0.264
ø65-80	b9	-0.200 / -0.274
ø80-100	b9	-0.220 / -0.307
ø100-120	b9	-0.240 / -0.327

NO OFF	DESCRIPTION	MATL CODE	MATL SPECN	HEAT TREATMENT	SCRAP SORT	NET WT (kg)	GROSS WT (kg)	DRAWING No. / COMP. CODE	ITEM No
—	—	—	—	—	—	—	—	— / —	—

TYPE OF PRODUCT
OR NAME OF
CUSTOMER/PROJECT

BHARAT HEAVY ELECTRICALS LTD.,
UNIT: HIGH PRESSURE BOILER PLANT.
TIRUCHIRAPALLI-620014.
365-191
02.03.2021

	NAME	SIGN	DATE	NO.OF VAR.
DRN	V.BAIRAVAN		22.1.05	—
CHD	R.L.NARAYANAN		22.1.05	
APPD	M.RAJAKUMAR		22.1.05	

DEPT: VL
CODE: 320
SCALE: NTS
WEIGHT (KG): REF. TABLE
REFERENCE INFORMATIONS
NO. OF ITEMS: —

TITLE: SPACER
CARD CODE: U 01
DRAWING NO.: 3-V-0000-17935
REV: 15

DCP No.	ALTD:	APPD:	REV	
–	RPS	SSK	15	SL. No. 37 INCLUDED.
	CHD: MK	DT: 13.01.23	ZONE –	
–	RPS	KRS	14	SL.No.35 & 36 INCLUDED
	CHD: SSK	DT: 25.12.17	ZONE –	

CAUTION: The information on this document is the property of BHARAT HEAVY ELECTRICALS LTD. It must not be used directly or indirectly in any way detrimental to the interest of the company.

Size A3

ALL DIMENSIONS ARE IN MILLIMETRES.

FOR TOLERANCES OF UNTOLERANCED DIMENSIONS DURING MANUFACTURE REFER RELEVANT QCP/QP

REV	DATE	ALTERED	R.P.SINGH
06	25.12.17	CHD & APPD	SSK & KRS

SL No. 17 INCLUDED

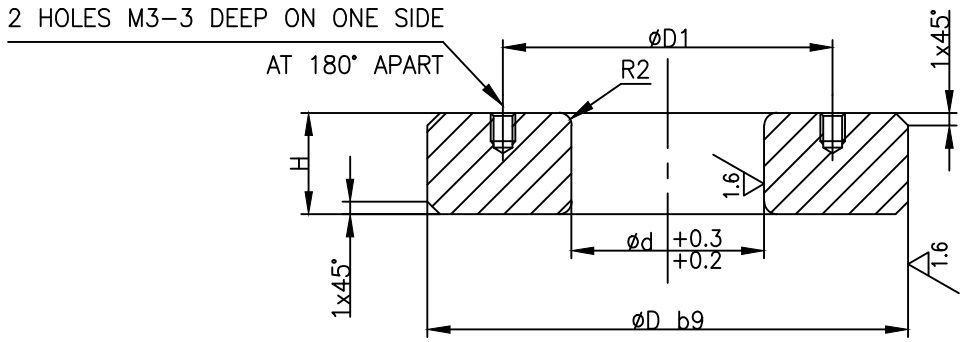

øD	b9
30 to 40	−0.170
	−0.232
40 to 50	−0.180
	−0.242
50 to 65	−0.190
	−0.264

NOTE:-

HARDNESS 22 HRC MAX. FOR SL.No.15 & 16 ONLY.

DRAWING RETRACED WITH REV. 03 ON 12.06.01

SL No.	øD	øD1	ød	H	SUGGESTED SIZE	MATERIAL SPECEN.	SCRAP SORT	NET WT (kg)	DRAWING NUMBER	COMP CODE	ITEM No
	DIMENSIONS										
17	48.4	40	31.75	20	ø52 x 30	SNIK AG, CERTIFY	40	0.164	4-V-NP35-90789	932042220000	--
16	45.2	37	28.575	38	ø50 x 46	A276-410 NT, CERTIFY	40	0.310	4-V-N112-90789	931101200000	--
15	28	22	16	9	ø32 x 15	A276-410 DOUBLE TEMPERED,CERTIY	40	0.030	4-V-T419-90789	931081870000	--
14	61.1	51	41.275	34	ø63 x 45	ASTM A276 Gr.410 CERTIFY, NT	40	0.380	4-V-N214-90789	931079270000	--
13	61.1	51	41.275	30	ø63 x 40		40	0.375	4-V-N213-90789	931079090000	--
12	51.6	43	34.925	28	ø55 x 38		40	0.25	4-V-N212-90789	931079080000	--
11	48.4	40	31.75	38	ø52 x 48		40	0.313	4-V-N211-90789	931079070000	--
10	38.9	32	25.4	18	ø45 x 25		40	0.096	4-V-N210-90789	931079060000	--
09	35.7	29	22.225	25	ø40 x 35		40	0.120	4-V-N209-90789	931079050000	--
08	32.5	28	19.05	29	ø36 x 38		40	0.124	4-V-N208-90789	931079040000	--
07	57.9	48	38.1	21	ø63 x 30		40	0.246	4-V-N207-90789	931079030000	--
06	51.6	43	34.925	30	ø55 x 40		40	0.267	4-V-N206-90789	931079020000	--
05	48.4	40	31.75	20	ø52 x 30		40	0.164	4-V-N205-90789	931079010000	--
04	45.2	37	28.575	30	ø50 x 38		40	0.227	4-V-N204-90789	931079000000	--
03	38.9	32	25.4	25	ø45 x 32		40	0.134	4-V-N203-90789	931078990000	--
02	35.7	29	22.225	13	ø40 x 20		40	0.063	4-V-N202-90789	931078980000	--
01	32.5	28	19.05	18	ø36 x 25		40	0.077	4-V-N201-90789	931078970000	--

BHARAT HEAVY ELECTRICALS LTD.,
UNIT: HIGH PRESSURE BOILER PLANT.
TIRUCHIRAPALLI 620014.

365-122 CM

	NAME	SIGN	DATE	NO.OF VAR
DRN	K.P.LEON		12.06.01	
CHD	T.R.R.MURTHY		12.06.01	
APPD	P.BOOMINATHAN		12.06.01	

DEPT	SCALE	WEIGHT (KG).	REFERENCE INFORMATIONS	NO. OF ITEMS
VL	NTS	REF.TABLE	CAD: C490789	
CODE 320				

TITLE	CARD CODE	DRAWING NO.	REV
SPACER	U 01	4-V-0000-90789	06

Size A4

CAUTION: The information on this document is the property of BHARAT HEAVY ELECTRICALS LTD. It must not be used directly or indirectly in any way detrimental to the interest of the company.

ALL DIMENSIONS ARE IN MILLIMETRES.

FOR TOLERANCES OF UNTOLERANCED DIMENSIONS DURING MANUFACTURE REFER RELEVANT QCP/QP

REV	DATE	ALTERED
		CHD & APPD

CAUTION: The information on this document is the property of BHARAT HEAVY ELECTRICALS LTD. It must not be used directly or indirectly in any way detrimental to the interest of the company.

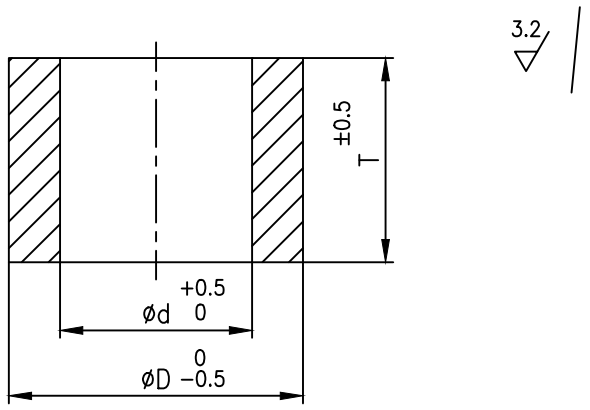

SL.No.	DRAWING No. / COMPONENT CODE	SPECN.	CODE	SUGG. SIZE	HEAT TREAT	NET WT.(Kg)	SCRAP SORT	ØD	Ød	T
04	4.V.UA69.27490 / 932057690000	A182 F316 CERTIFY	–	DIA 90x82	SH	1.30	46	73.80	50.80	76
03	4.V.F848.27490 / 932057680000		–	DIA 70x65	SH	0.80	46	61.10	41.30	58
02	4.V.F913.27490 / 932057670000		–	DIA 56x60	SH	0.41	46	45.20	28.60	54
01	4.V.F829.27490 / 932057660000		–	DIA 56x50	SH	0.20	46	35.70	22.23	42
	COMPONENT CODE	RAW MATL DETAIL					SCRAP SORT	DIMENSIONS		

NO OF	DESCRIPTION	MATL CODE	MATL SPECN	HEAT TREATMENT	SCRAP SORT	NET WT (kg)	GROSS WT (kg)	DRAWING No	ITEM No
–	–	–	–	–	–	–	–	–	–

BHARAT HEAVY ELECTRICALS LTD.,
UNIT: HIGH PRESSURE BOILER PLANT.
TIRUCHIRAPALLI 620014.
365–122

	NAME	SIGN	DATE	NO.OF VAR
DRN	R.P.SINGH		11.06.20	
CHD	SAMEER BHAT		11.06.20	
APPD	S.SATHEES		11.06.20	

DEPT	CODE		SCALE	WEIGHT (KG).	REFERENCE INFORMATIONS	NO. OF ITEMS
VL	320	–	NTS	REF TABLE		

TITLE	CARD CODE	DRAWING NO.	REV
SPACER	U 01	4–V–0000–27490	00

Size A4

ALL DIMENSIONS ARE IN MILLIMETRES.

FOR TOLERANCES OF UNTOLERANCED DIMENSIONS DURING MANUFACTURE REFER RELEVANT QCP/QP

REV	DATE	ALTERED	J.S
04	04.01.12	CHD & APPD	K.S

DRAWING CONVERTED AS CAD AND UPDATED.

DCN : SB : 801294 / 5014784

CAUTION: The information on this document is the property of BHARAT HEAVY ELECTRICALS LTD. It must not be used directly or indirectly in any way detrimental to the interest of the company.

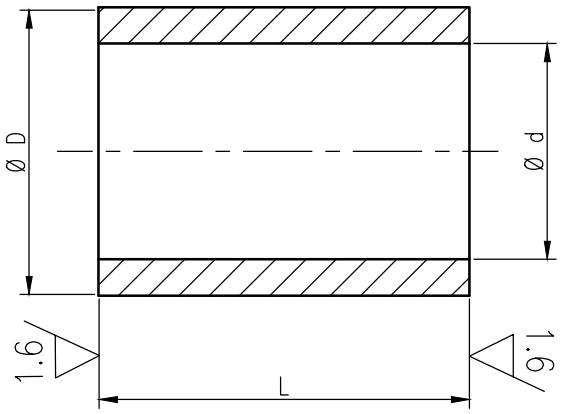

STYLE No.	DESCRIPTION	RAW MATERIAL CODE	RAW MATERIAL SPECIFICATION	No. OFF	NET WEIGHT (kg)	Ø D	Ø d	L	MATERIAL CODE
1	TUBE Ø 21.3X2.77	150820010000	SA106 GRB	2	0.02	21.3	16.1	$27.5^{+0.1}_{-0.0}$	842020114700
2	TUBE Ø 21.3X3.73	150820020000	SA106 GRB	6	0.06	21.3	13.84	$18.5^{+0.1}_{-0.0}$	842020114800
3	TUBE Ø 31.8X5	150890270000	SA213 T22	4	0.04	31.8	21.8	$11.5^{+0.1}_{-0.0}$	842020112900
4	TUBE Ø 31.8X5	150890270000	SA213 T22	5	0.05	31.8	21.8	$13.5^{+0.1}_{-0.0}$	842020113000
5	TUBE Ø 31.8X5	150890270000	SA213 T22	3	0.03	31.8	21.8	$9.5^{+0.1}_{-0.0}$	---
6	TUBE Ø 31.8X5	150890270000	SA213 T22	1	0.01	31.8	21.8	$1.5^{+0.1}_{-0.0}$	----

NO OFF	DESCRIPTION	MATL CODE	MATL SPECN	HEAT TREATMENT	SCRAP SORT	NET WT (kg)	GROSS WT (kg)	DRAWING No	ITEM No

भारत हैल BHEL

365-122

BHARAT HEAVY ELECTRICALS LTD.,
UNIT: HIGH PRESSURE BOILER PLANT.
TIRUCHIRAPALLI 620014.

	NAME	SIGN	DATE	NO.OF VAR
DRN	J.SANKAR	J.S	04.01.12	
CHD	K.SRIDHARAN	K.S	04.01.12	
APPD	K.SRIDHARAN	K.S	04.01.12	

DEPT	SCALE	WEIGHT (KG).	REFERENCE INFORMATIONS	NO. OF ITEMS
SB	NTS	–		
CODE 330				

TITLE	CARD CODE	DRAWING NO.	REV
SPACER	U 01	4-20-201-00254	04

Size A4

ALL DIMENSIONS ARE IN MILLIMETRES. FOR TOLERANCES OF UNTOLERANCED DIMENSIONS DURING MANUFACTURE REFER RELEVANT QCP / QP.

DRAWING NO: 3-V-0000-17472

12.5 / 3.2 / 0.4

SL. No.	DRG. No.	COMP. CODE	MATL. SPECN		SCRAP SORT	ØD-b9	ØD1	L	L1	L2	L3	L4	L5	RG	L6	C	ØU	ØU1	DIA INCH-N ACME-2G-LEFT	FINISHED Wt.(kg)	SIZE/ RATING
1	3-V-N277-17472/04	93 105 750 0000	SA 182-F316 SH	CERTIFY	46	19.050	28	320	31	18.5	10	14.5	150	60	20.0	2	13.6	13	0.75" -6 ACME	0.72	2"-C150 & C300
2	3-V-N286-17472/05	93 105 751 0000			46	22.225	32	383	41	29.0	16	14.5	155	70	25.5	3	15.9	13	0.875"-5 ACME	1.29	3"-C150
3	3-V-N282-17472/05	93 105 869 0000	SA182-F6a cl.3 HT		40	22.225	32	448	41	29.0	16	14.5	217	70	25.5	3	15.9	13	0.875"-5 ACME	1.42	3"-C300 (MO)FAB
4	3-V-N429-17472/05	93 106 286 0000			40	22.225	32	418	41	29.0	16	14.5	186	70	25.5	3	15.9	13	0.875"-5 ACME	1.35	3"-C300 (MO SG)
5	3-V-N357-17472/05	93 106 450 0000			40	22.225	32	408	41	29.0	16	14.5	190	70	25.5	3	15.9	13	0.875"-5 ACME	1.30	3"-C150 SG MO
6	3-V-N537-17472/04	93 106 836 0000			40	19.050	28	356	31	18.5	10	14.5	164	60	20.0	2	13.6	13	0.75" -6 ACME	1.28	2"-C150 & C300
7	3-V-N434-17472/04	93 107 968 0000			40	19.050	28	356	31	18.5	10	14.5	144	60	20.0	2	13.6	13	0.75" -6 ACME	1.28	2"-C150
8	3-V-N364-17472/05	93 106 923 0000	SA 182-F316 SH		46	22.225	32	392	41	29.0	16	14.5	163	70	25.5	3	15.9	13	0.875"-5 ACME	1.31	3"-C300 HW
9	3-V-N342-17472/04	93 107 831 0000			46	19.050	28	356	31	18.5	10	14.5	164	60	20.0	2	13.6	13	0.75" -6 ACME	1.28	2"-C150 & C300
10	3-V-N472-17472/04	93 107 960 0000			46	19.050	28	356	31	18.5	10	14.5	144	60	20.0	2	13.6	13	0.75" -6 ACME	1.28	2"-C150
11	3-V-N338-17472/05	93 107 969 0000			46	22.225	32	408	41	29.0	16	14.5	190	70	25.5	3	15.9	13	0.875"-5 ACME	1.31	3"-C150
12	3-V-N373-17472/06	93 108 076 0000			46	22.225	32	418	41	29.0	16	14.5	186	70	25.5	3	15.9	13	0.875"-5 ACME	1.35	3"-C300
13	3-V-K993-17472/03	93 109 642 0000	SA182-F6a cl.3 HT		40	22.225	32	418	41	29.0	16	14.5	186	70	25.5	3	15.9	13	0.875"-5 ACME	1.35	3"-C300 MO (SPF)
14	3-V-K995-17472/03	93 109 643 0000			40	22.225	32	408	41	29.0	16	14.5	190	70	25.5	3	15.9	13	0.875"-5 ACME	1.30	3"-C150 MO (SPF)
15	3-V-NK66-17472/01	93 205 298 0000	SA 182-F60, SH		46	22.225	32	408	41	29.0	16	14.5	190	70	25.5	3	15.9	13	0.875"-5 ACME	1.30	3"-C150
16	3-V-NP45-17472/01	93 205 661 0000	SA182-F316, SH		46	19.050	28	380	31	18.5	10	14.5	180	60	20.0	2	13.6	13	0.75" -6 ACME	0.85	2 1/2"-C150
17	3-V-NP43-17472/01	93 205 953 0000	SA182-F6a cl3, HT		40	19.050	28	380	31	18.5	10	14.5	180	60	20.0	2	13.6	13	0.75" -6 ACME	0.85	2 1/2"-C150

ABOVE & INCLUDING	b9
ø18-ø30	-0.160
	-0.212
ø30-ø40	-0.172
	-0.232
ø40-ø50	-0.180
	-0.242

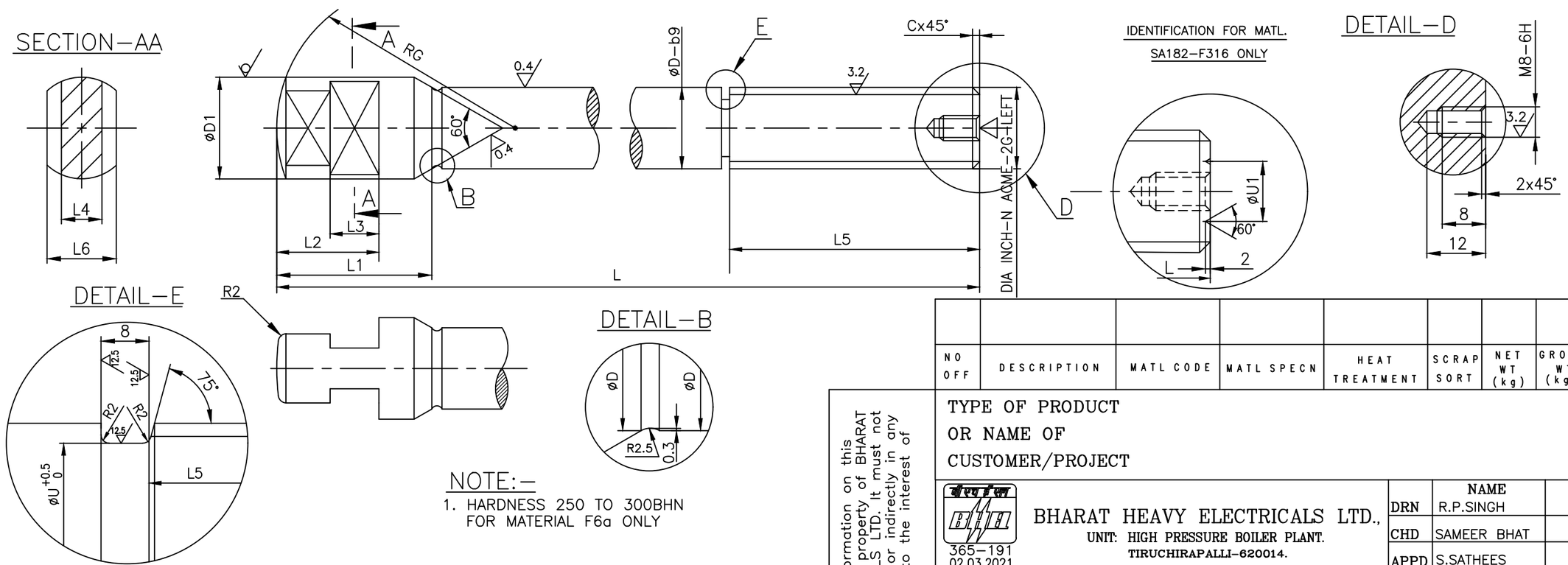

NOTE:-

1. HARDNESS 250 TO 300BHN FOR MATERIAL F6a ONLY

DCP No.	ALTD: RPS	APPD: SSK
-	CHD: MK	DT: 27.11.23

REV	
19	THREADED HOLE INCLUDED INDETAIL-D.
ZONE -	

CAUTION: The information on this document is the property of BHARAT HEAVY ELECTRICALS LTD. It must not be used directly or indirectly in any way detrimental to the interest of the company.

NO OF	DESCRIPTION	MATL CODE	MATL SPECN	HEAT TREATMENT	SCRAP SORT	NET WT (kg)	GROSS WT (kg)	DRAWING No. / COMP. CODE	ITEM No

TYPE OF PRODUCT
OR NAME OF
CUSTOMER/PROJECT

draft BHEL 365-191 02.03.2021

BHARAT HEAVY ELECTRICALS LTD.,
UNIT: HIGH PRESSURE BOILER PLANT.
TIRUCHIRAPALLI-620014.

	NAME	SIGN	DATE	NO.OF VAR.
DRN	R.P.SINGH		20.04.21	—
CHD	SAMEER BHAT		20.04.21	
APPD	S.SATHEES		20.04.21	

DEPT	SCALE	WEIGHT (KG).	REFERENCE INFORMATIONS	NO. OF ITEMS
VL	NTS	REF. TABLE		—
CODE 320				

TITLE	CARD CODE	DRAWING NO.	REV
STEM	U 01	3-V-0000-17472	19

Size A3

ALL DIMENSIONS ARE IN MILLIMETRES. FOR TOLERANCES OF UNTOLERANCED DIMENSIONS DURING MANUFACTURE REFER RELEVANT QCP / QP.

DRAWING NO: 3-V-0000-17472

12.5 / 3.2 / 0.4

SL. No.	DRG. No.	COMP. CODE	MATL. SPECN		SCRAP SORT	ØD-b9	ØD1	L	L1	L2	L3	L4	L5	RG	L6	C	ØU	ØU1	DIA INCH-N ACME-2G-LEFT	FINISHED Wt.(kg)	SIZE/ RATING
1	3-V-N277-17472/04	93 105 750 0000	SA 182-F316 SH	CERTIFY	46	19.050	28	320	31	18.5	10	14.5	150	60	20.0	2	13.6	13	0.75" -6 ACME	0.72	2"-C150 & C300
2	3-V-N286-17472/05	93 105 751 0000			46	22.225	32	383	41	29.0	16	14.5	155	70	25.5	3	15.9	13	0.875"-5 ACME	1.29	3"-C150
3	3-V-N282-17472/05	93 105 869 0000	SA182-F6a cl.3 HT		40	22.225	32	448	41	29.0	16	14.5	217	70	25.5	3	15.9	13	0.875"-5 ACME	1.42	3"-C300 (MO)FAB
4	3-V-N429-17472/05	93 106 286 0000			40	22.225	32	418	41	29.0	16	14.5	186	70	25.5	3	15.9	13	0.875"-5 ACME	1.35	3"-C300 (MO SG)
5	3-V-N357-17472/05	93 106 450 0000			40	22.225	32	408	41	29.0	16	14.5	190	70	25.5	3	15.9	13	0.875"-5 ACME	1.30	3"-C150 SG MO
6	3-V-N537-17472/04	93 106 836 0000			40	19.050	28	356	31	18.5	10	14.5	164	60	20.0	2	13.6	13	0.75" -6 ACME	1.28	2"-C150 & C300
7	3-V-N434-17472/04	93 107 968 0000			40	19.050	28	356	31	18.5	10	14.5	144	60	20.0	2	13.6	13	0.75" -6 ACME	1.28	2"-C150
8	3-V-N364-17472/05	93 106 923 0000	SA 182-F316 SH		46	22.225	32	392	41	29.0	16	14.5	163	70	25.5	3	15.9	13	0.875"-5 ACME	1.31	3"-C300 HW
9	3-V-N342-17472/04	93 107 831 0000			46	19.050	28	356	31	18.5	10	14.5	164	60	20.0	2	13.6	13	0.75" -6 ACME	1.28	2"-C150 & C300
10	3-V-N472-17472/04	93 107 960 0000			46	19.050	28	356	31	18.5	10	14.5	144	60	20.0	2	13.6	13	0.75" -6 ACME	1.28	2"-C150
11	3-V-N338-17472/05	93 107 969 0000			46	22.225	32	408	41	29.0	16	14.5	190	70	25.5	3	15.9	13	0.875"-5 ACME	1.31	3"-C150
12	3-V-N373-17472/06	93 108 076 0000			46	22.225	32	418	41	29.0	16	14.5	186	70	25.5	3	15.9	13	0.875"-5 ACME	1.35	3"-C300
13	3-V-K993-17472/03	93 109 642 0000	SA182-F6a cl.3 HT		40	22.225	32	418	41	29.0	16	14.5	186	70	25.5	3	15.9	13	0.875"-5 ACME	1.35	3"-C300 MO (SPF)
14	3-V-K995-17472/03	93 109 643 0000			40	22.225	32	408	41	29.0	16	14.5	190	70	25.5	3	15.9	13	0.875"-5 ACME	1.30	3"-C150 MO (SPF)
15	3-V-NK66-17472/01	93 205 298 0000	SA 182-F60, SH		46	22.225	32	408	41	29.0	16	14.5	190	70	25.5	3	15.9	13	0.875"-5 ACME	1.30	3"-C150
16	3-V-NP45-17472/01	93 205 661 0000	SA182-F316, SH		46	19.050	28	380	31	18.5	10	14.5	180	60	20.0	2	13.6	13	0.75" -6 ACME	0.85	2 1/2"-C150
17	3-V-NP43-17472/01	93 205 953 0000	SA182-F6a cl3, HT		40	19.050	28	380	31	18.5	10	14.5	180	60	20.0	2	13.6	13	0.75" -6 ACME	0.85	2 1/2"-C150

ABOVE & INCLUDING	b9
ø18-ø30	-0.160
	-0.212
ø30-ø40	-0.172
	-0.232
ø40-ø50	-0.180
	-0.242

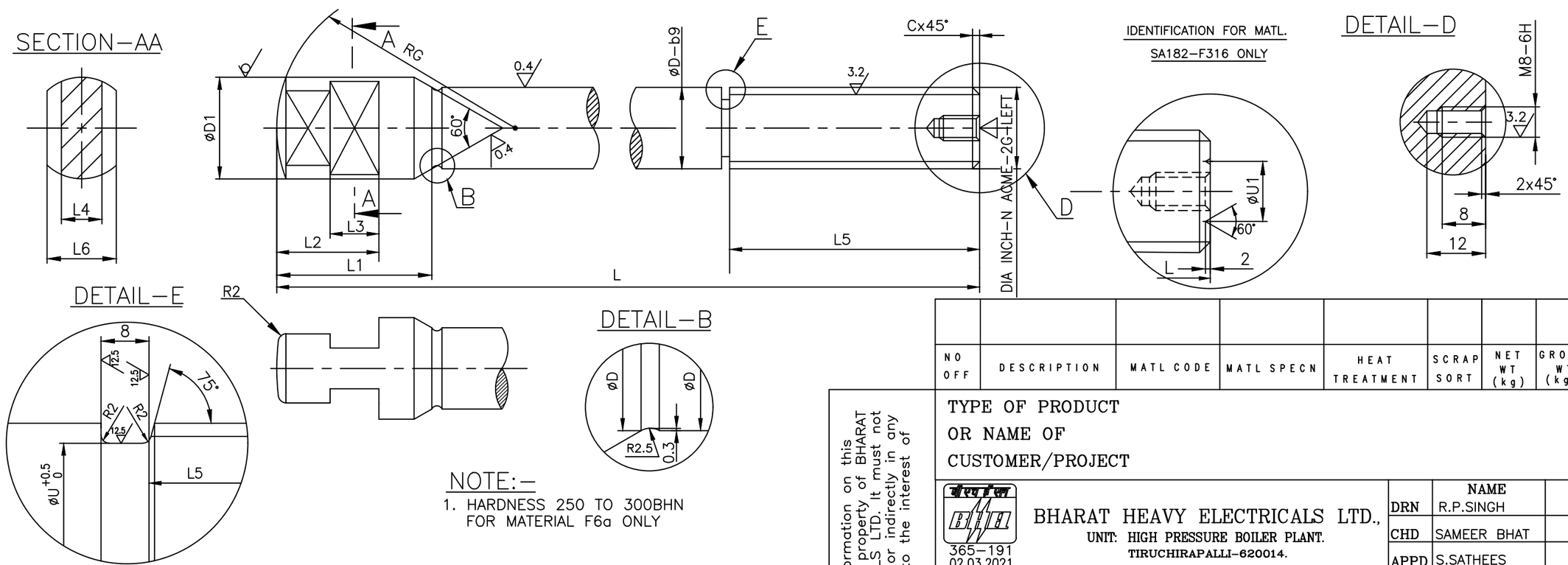

NOTE:-

1. HARDNESS 250 TO 300BHN FOR MATERIAL F6a ONLY

DCP No.	ALTD: RPS	APPD: SSK
-	CHD: MK	DT: 27.11.23

REV	
19	THREADED HOLE INCLUDED INDETAIL-D.
ZONE -	

CAUTION: The information on this document is the property of BHARAT HEAVY ELECTRICALS LTD. It must not be used directly or indirectly in any way detrimental to the interest of the company.

NO OF	DESCRIPTION	MATL CODE	MATL SPECN	HEAT TREATMENT	SCRAP SORT	NET WT (kg)	GROSS WT (kg)	DRAWING No. / COMP. CODE	ITEM No

TYPE OF PRODUCT
OR NAME OF
CUSTOMER/PROJECT

draft BHEL 365-191 02.03.2021

BHARAT HEAVY ELECTRICALS LTD.,
UNIT: HIGH PRESSURE BOILER PLANT.
TIRUCHIRAPALLI-620014.

	NAME	SIGN	DATE	NO.OF VAR.
DRN	R.P.SINGH		20.04.21	—
CHD	SAMEER BHAT		20.04.21	
APPD	S.SATHEES		20.04.21	

DEPT	SCALE	WEIGHT (KG).	REFERENCE INFORMATIONS	NO. OF ITEMS
VL	NTS	REF. TABLE		—
CODE 320				

TITLE	CARD CODE	DRAWING NO.	REV
STEM	U 01	3-V-0000-17472	19

Size A3

DRAWING NO. 3-V-0000-95020

ALL DIMENSIONS ARE IN MILLIMETRES

SL. NO.	DRAWING NO.	COMP. CODE	RAW MATL. DRAWING NO.	STEM SIZE	DIMENSIONS ØD	Ød	L		NET WT.	REMARKS
01	3-V-1145-95020	930035300000	4-V-K326-90444	Tr.24x5	30	25	100		0.033	3"/C150 & C300 G.V.
02	3-V-1148-95020	931035310000	4-V-K326-90444	Tr.24x5	30	25	130		0.043	4"/C150 & C300 G.V.
03	3-V-1775-95020	931035320000	4-V-K327-90444	Tr.32x6	38	33	155		0.065	6"/C150 G.V.
04	3-V-1013-95020	931035330000	4-V-K327-90444	Tr.32x6	38	33	130		0.054	6"/C300 G.V.
05	3-V-1776-95020	931035340000	4-V-K330-90444	Tr.36x6	42	37	230		0.11	8"/C150 & C300 G.V.
06	3-V-1777-95020	931035350000	4-V-K331-90444	Tr.40x6	46	41	273		0.140	10"/C150 G.V.
07	3-V-1778-95020	931035360000	4-V-K331-90444	Tr.40x6	46	41	352		0.181	12"/C150 G.V.
08	3-V-1356-95020	931035370000	4-V-K329-90444	Tr.44x7	50	45	365		0.204	12"/C300 G.V.
09	3-V-2478-95020	931035380000	4-V-K332-90444	Tr.28x3	34	29	74		0.027	3"/C300 GLV
10	3-V-2480-95020	931035390000	4-V-K330-90444	Tr.36x3	42	37	104		0.048	6"/C300 GLV
11	3-V-W193-95020	931036600000	4-V-K328-90444	Tw48-3	54	49	300		0.18	200/C1500 GV
12	3-V-W185-95020	931036540000	4-V-K329-90444	Tw44-3	50	45	250		0.12	150/C1500 GV
13	3-V-W177-95020	931036550000	4-V-K330-90444	Tw36-3	42	37	170		0.085	100/C1500 GV
14	3-V-1781-95020	931036700000	4-V-K348-90444	Tr.52X8	58	53	210		0.14	20"/C150 GV

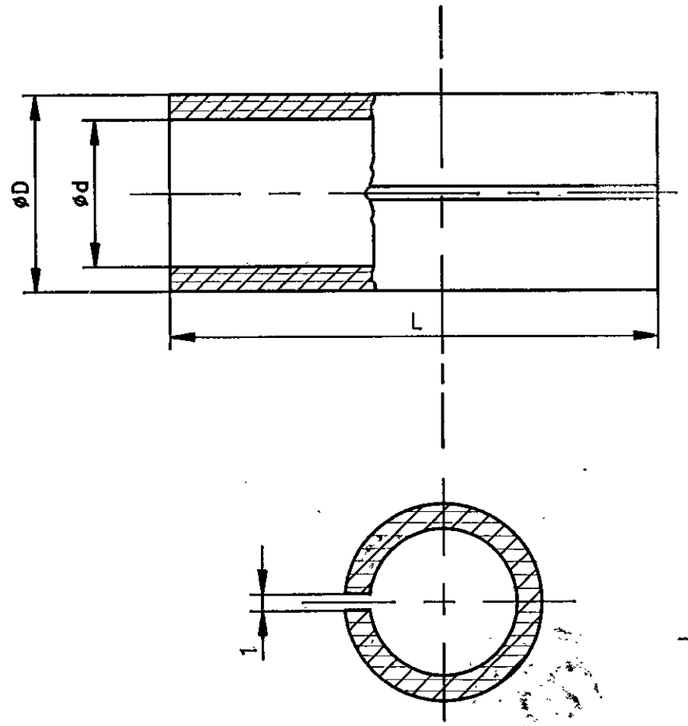

NOTE:

1. THE LENGTH 'L' IS GIVEN IN EXCESS. ONLY DURING ASSEMBLY THE PROTECTION COVER IS TO BE CUT INTO REQUIRED LENGTH.
2. ONE LENGTH OF THE STEM PROTECTION COVER FOR A PARTICULAR MATL. CODE IS GIVEN IN EXCESS AND THAT IS TO BE USED FOR MANY NO. OF VALVES.

REV	DATE	ALTERED
		CHECKED

CAUTION: The information on this document is the property of BHARAT HEAVY ELECTRICALS LTD. It must not be used directly or indirectly in any way detrimental to the interest of the company.

TYPE OF PRODUCT
OR NAME OF
CUSTOMER/PROJECT

BHARAT HEAVY ELECTRICALS LTD.,
UNIT: HIGH PRESSURE BOILER PLANT.
TIRUCHIRAPALLI-620014.

	NAME	SIGN	DATE	NO. OF VAR.
DRN	V.BAIRAVAN		2 9 91	
CHD	A.V.NATHAN		24.10.91	
APPD	N.S.N.MOHAN		24.10.91	

DEPT	GRADE UNTOL.DIM		SCALE	WEIGHT(KG)	COMP CODE	ITEM NO.	NO. OF ITEMS
VL			NTS	–	–		01
CODE 320	¢ / M / ¢						

TITLE	CARD CODE	DRAWING NO.	REV
STEM PROTECTION COVER	U 01	3-V-0000-95020	

Size A3

ALL DIMENSIONS ARE IN MILLIMETRES. FOR TOLERANCES OF UNTOLERANCED DIMENSIONS DURING MANUFACTURE REFER RELEVANT QCP / QP.

DRAWING NO. 3-V-0000-24101

> ø18 to ≤ ø30 −b9	−0.160
	−0.212

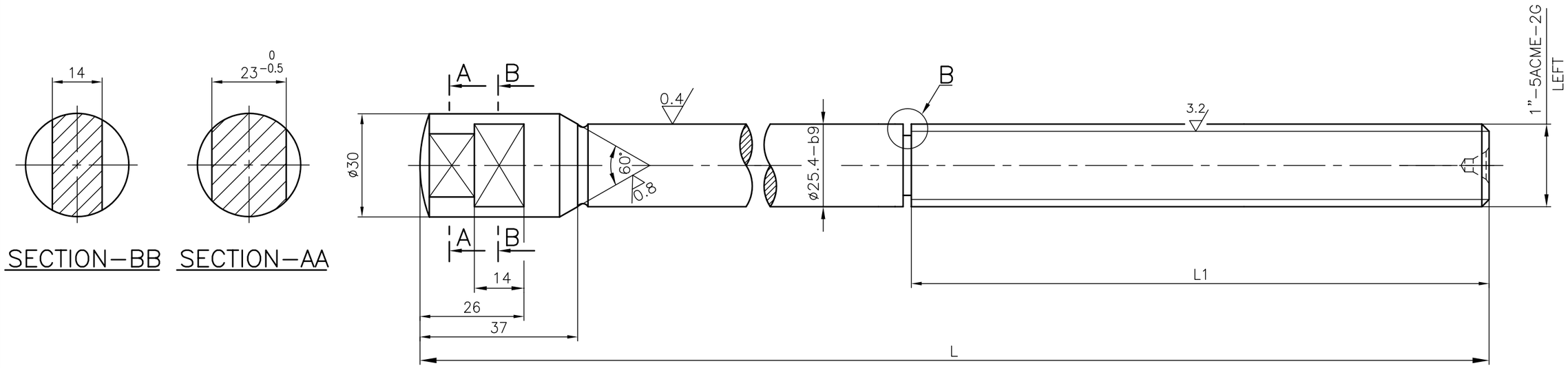

DETAIL−B

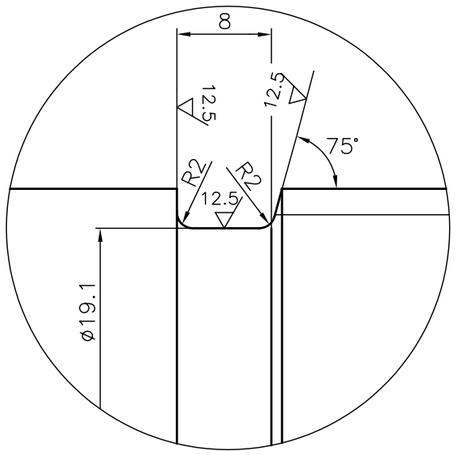

NOTE:−

HARDNESS 250 TO 300 BHN FOR SA182−F6a cl.3

SL. No.	DESCRIPTION	L (DIMENSIONS)	L1 (DIMENSIONS)	MATL SPECN	HEAT TREATMENT	SCRAP SORT	NET WT (kg)	GROSS WT (kg)	DRAWING No / COMP. CODE	ITEM No
02	---	431	181	A182 F6a.CL.3 CERTIFY	H T	40	1.7	1.8	3−V−NC73−24101 / 932013100000	--
01	---	404	176	A182 F6a.CL.3 CERTIFY	H T	40	1.6	1.7	3−V−NC04−24101 / 931300570000	--

REV	DATE	ALTERED	
01	23.04.08	CHD & APPD	T.R.RAMAMURTHY / P.BOOMINATHAN

SL.No.02 INCLUDED

CAUTION: The information on this document is the property of BHARAT HEAVY ELECTRICALS LTD. It must not be used directly or indirectly in any way detrimental to the interest of the company.

TYPE OF PRODUCT
OR NAME OF
CUSTOMER/PROJECT

DRG.REDRAWN WITH REV.01 ON 23.04.2008

BHARAT HEAVY ELECTRICALS LTD.,
UNIT: HIGH PRESSURE BOILER PLANT.
TIRUCHIRAPALLI-620014.
365−121

	NAME	SIGN	DATE	NO.OF VAR.
DRN	K.P.LEON		18.09.03	
CHD	P.BOOMINATHAN		18.09.03	
APPD	K.S.RAMAN		18.09.03	

DEPT	CODE	SCALE	WEIGHT (KG).	REFERENCE INFORMATIONS	NO. OF ITEMS
VL	320	NTS	--	CAD : C324101	

TITLE	CARD CODE	DRAWING NO.	REV
STEM	U 01	3−V−0000−24101	01

Size A3

ALL DIMENSIONS ARE IN MILLIMETRES. FOR TOLERANCES OF UNTOLERANCED DIMENSIONS DURING MANUFACTURE REFER RELEVANT QCP / QP.

DRAWING NO. 3-V-0000-95371

SL:NO	DRAWING.NO.	COMP.CODE	MATL.SPECN	øD-t	øD1	L	L1	L3	DIAxNPITCH	SCRAP SORT	WT (KG)	SIZE/RATING	øU +0.5 0
1	3-V-1777-95371/01	931058910000	A182 Gr.F6, HT,(CERTIFY)	40.000 -a11	50	1020	69	435	Tr.40X6L-9C	40	9.22	10"/150 INTEGERTED DESIGN	32.5
2	3-V-1145-95371/01	931059590000		24.000 -a11	32	450	37	182	Tr.24X5L-9C		1.53	3"/150 INTEGRATED DESIGN	17.0
3	3-V-N204-95371/01	931078870000		28.575 -b9	40	625	52	275	1.125"-5-ACME 2G-LEFT		3.06	6"/150 UNIFIED COMPACT DESIGN	22.2
4	3-V-N289-95371/02	931079710000		22.225 -b9	32	408	41	190	0.875-5-ACME 2G-LEFT		1.30	3"/150 COMPACT DESIGN	15.9
5	3-V-K972-95371/01	931093680000		31.750 -b9	45	732	54	328	1.25"-4-ACME 2G-LEFT		4.40	8"/150 COMPACT DESIGN	24.1
6	3-V-K973-95371/02	931093730000		34.925 -b9	50	877	69	390	1.375"-4-ACME 2G-LEFT		6.70	10"/150 COMPACT DESIGN	27.3
7	3-V-K974-95371/01	931093880000		38.100 -b9	50	984	69	445	1.5"-4-ACME 2G-LEFT		9.80	12"/150 COMPACT DESIGN	30.4
8	3-V-U016-95371/01	931098730000		41.275 -b9	55	990	75	436	1.625"-4-ACME 2G-LEFT		107	12"/300 COMPACT DESIGN	33.6
9	3-V-U017-95371/02	931098740000		41.275 -b9	50	875	69	380	1.625"-4-ACME 2G-LEFT		9.63	10"/300 COMPACT DESIGN	33.6
10	3-V-U018-95371/01	931098750000		34.925 -b9	45	800	64	373	1.375"-4-ACME 2G-LEFT		6.30	8"/300 COMPACT DESIGN	27.3
11	3-V-U019-95371/01	931098760000		31.750 -b9	40	660	52	290	1.25"-4-ACME 2G-LEFT		4.29	6"/300 COMPACT DESIGN	24.1
12	3-V-U020-95371/01	931098770000		25.400 -b9	32	492	37	223	1.00"-5-ACME 2G-LEFT		1.87	4"/300 COMPACT DESIGN	19.1
13	3-V-U021-95371/01	931098780000		22.225 -b9	32	418	41	186	0.875"-5-ACME 2G-LEFT		1.37	3"/300 COMPACT DESIGN	15.9
14	3-V-U022-95371/02	931098790000		19.050 -b9	28	356	31	164	0.75"-6-ACME 2G-LEFT		1.32	2"/300 COMPACT DESIGN	13.6
15	3-V-U023-95371/02	931098840000	A182 Gr.F316, SH,(CERTIFY)	34.925 -b9	50	878	69	392	1.375"-4-ACME 2G-LEFT	46	6.70	10"/150 COMPACT DESIGN (F316)	27.3
16	3-V-U054-95371/02	931099980000	A182 Gr.F6 CL.3 HT,(CERTIFY)	25.400 -b9	32	492	37	214	1.00"-5-ACME 2G-LEFT	40	1.92	4"/150 COMPACT DESIGN MO	19.1
17	3-V-U058-95371/01	931100120000		31.750 -b9	45	760	54	335	1.25"-4-ACME 2G-LEFT	40	4.40	8"/150 COMPACT DESIGN MO-IQ20	24.1
18	3-V-U107-95371/01	931101990000		25.400 -b9	32	492	37	204	1.00"-5-ACME 2G-LEFT	40	1.87	4"/150 SG COMPACT DESIGN HW	19.1

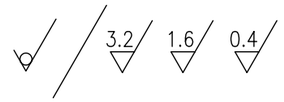

øD-a11

> ø30 to ≤ ø40	-0.310
	-0.470
> ø40 to ≤ ø60	-0.320
	-0.480

øD-b9

> ø18 to ≤ ø30	-0.160
	-0.212
> ø30 to ≤ ø40	-0.172
	-0.232
> ø40 to ≤ ø50	-0.180
	-0.242

DETAIL-E

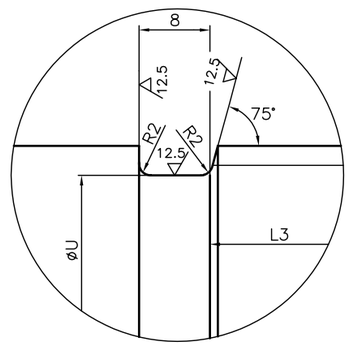

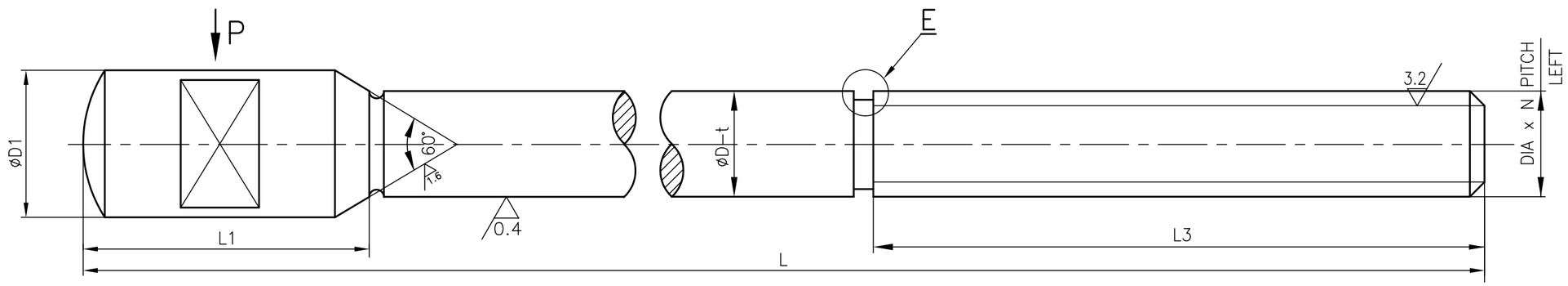

SECTION-BB

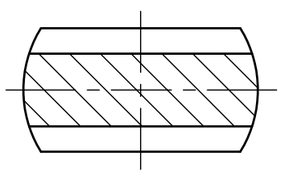

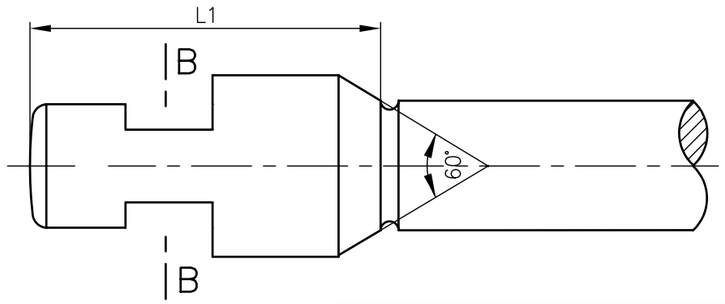

VIEW-P

(ONLY FOR SL.No.04 ,13 & 14)

NOTE:

HARDNESS 235 BHN FOR A182 F316.

REV	DATE	ALTERED T.R.RAMAMURTHY
11	22.10.07	CHD & APPD P.BOOMINATHAN

IN SL.No.16 DIMN.L3 214 WAS 204
IN SL.No.18 DIMN.L3 204 WAS 200

REFER DCP.800763

CAUTION: The information on this document is the property of BHARAT HEAVY ELECTRICALS LTD. It must not be used directly or indirectly in any way detrimental to the interest of the company.

TYPE OF PRODUCT OR NAME OF CUSTOMER/PROJECT: CS

DRAWING RETRACED WITH REVISON 11 ON 22.10.2007 REFER DCN:CS:1031 & 1097

BHARAT HEAVY ELECTRICALS LTD.
UNIT: HIGH PRESSURE BOILER PLANT.
TIRUCHIRAPALLI 620014.
365-121

	NAME	SIGN	DATE	NO.OF VAR.
DRN	T.R.RAMAMURTHY		22.10.07	
CHD	T.R.RAMAMURTHY		22.10.07	
APPD	P.BOOMINATHAN		22.10.07	

DEPT	CODE	SCALE	WEIGHT (KG).	REFERENCE INFORMATIONS	NO. OF ITEMS
VL	320	NTS	REFER TABLE	CAD.DWG.NO:395371	

TITLE	CARD CODE	DRAWING NO.	REV
STEM	U 01	3-V-0000-95371	11

Size A3

ALL DIMENSIONS ARE IN MILLIMETRES. FOR TOLERANCES OF UNTOLERANCED DIMENSIONS DURING MANUFACTURE REFER RELEVANT QCP / QP.

DRAWING NO. 3-V-0000-95399

SL.No.	DRAWING NUMBER	COMP. CODE	DIMENSIONS					REMARKS
			L	L1	L2	Md	TD x P-LEFT	
01	3-V-N251-95399/1	931059190000	492	12	17	M8	1"-5ACME	4"-300C WCB
02	3-V-N248-95399/1	931059200000	660	16	22	M16	1.25"-4ACME	6"-300C WCB
03	3-V-N244-95399/1	931059210000	800	16	22	M16	1.375"-4ACME	8"-300C WCB
04	3-V-N201-95399/1	931059890000	356	8	10	M8	0.75"-6ACME	2"-150/300C WCB
05	3-V-N209-95399/1	931059900000	418	8	10	M8	0.875"-5ACME	3"-300C WCB
06	3-V-N213-95399/1	931059910000	860	16	22	M16	1.625"-4ACME	10"-300C WCB
07	3-V-N207-95399/1	931059920000	960	16	22	M16	1.5"-6ACME	12"-150C,WCB
08	3-V-N205-95399/1	931059930000	694	16	22	M16	1.25"-4ACME	8"-150C WCB
09	3-V-N206-95399/1	931059940000	840	16	22	M16	1.375"-4ACME	10"-150C WCB
10	3-V-N230-95399/1	931060250000	800	16	22	M16	1.375"-4ACME	8"-300C WC9
11	3-V-N318-95399	931062700000	492	12	17	M8	1"-5ACME	4"-150C WCB SG
12	3-V-N324-95399	931062710000	492	12	17	M8	1"-5ACME	4"-300C WCB SG
13	3-V-N326-95399	931062720000	418	12	17	M8	0.875"-5ACME	3"-300C WCB SG
14	3-V-N329-95399	931062730000	800	16	22	M16	1.375"-4ACME	8"-300C WCB SG
15	3-V-N357-95399	931064530000	408	12	17	M8	0.875"-5ACME	3"-150C WCB SG
16	3-V-N325-95399	931064570000	732	16	22	M16	1.25"-4ACME	8"-150C WCB SG
17	3-V-N362-95399	931064580000	877	16	22	M16	1.375"-4ACME	10"-150C WCB SG
18	3-V-N392-95399	931064590000	984	16	22	M16	1.5"-4ACME	12"-150C WCB SG
19	3-V-N105-95399	931066590000	961	34	38	M20	1.625"-4ACME	12"-300C WCB
20	3-V-N284-95399	931067000000	625	16	22	M16	1.125"-5ACME	6"-150C F316

SL.No.	DRAWING NUMBER	COMP. CODE	DIMENSIONS					REMARKS
			L	L1	L2	Md	TD x P-LEFT	
21	3-V-N243-95399	931067010000	725	16	22	M16	1.25"-4ACME	8"-150C F316
22	3-V-N277-95399	931069080000	356	8	10	M8	0.75"-6ACME	2"-150C F316
23	3-V-N202-95399	931069090000	408	12	17	M8	0.875"-5ACME	3"-150C F316
24	3-V-N203-95399	931069100000	492	12	17	M8	1"-5ACME	4"-150C F316
25	3-V-N219-95399	931069200000	625	16	22	M16	1.125"-5ACME	6"-150C SG
26	3-V-N210-95399	931072160000	492	12	17	M8	1"-5ACME	4"-300C F316
27	3-V-M661-95399	931075380000	961	34	38	M20	1.625"-4ACME	12"-300C C5
28	3-V-N285-95399	931078710000	492	12	17	M8	1.0"-5ACME	4"-150C F316 SG
29	3-V-K801-95399	931078720000	492	12	17	M12	1.0"-5ACME	4"-150C F6 SG
30	3-V-N339-95399	931078890000	625	16	22	M16	1.25"-5ACME	6"-150C F316
31	3-V-N204-95399	931078900000	625	8	10	M8	1.25"-5ACME	6"-150C F6a
32	3-V-K399-95399	931078910000	625	16	22	M16	1.25"-5ACME	6"-150C F6a
33	3-V-N472-95399	931079610000	356	8	10	M8	0.75"-6ACME	2"-150C F316
34	3-V-M343-95399	931079700000	408	8	10	M8	0.875"-5ACME	3"-150C F6a
35	3-V-N298-95399	931079830000	356	8	10	M8	0.875"-5ACME	2"-150C F6a
36	3-V-N340-95399	931080160000	660	16	22	M16	1.25"-4ACME	6"-300C F6a
37	3-V-N631-95399/01	931080170000	1050	34	38	M20	1.625"-4ACME	12"-300C F6a
38	3-V-N644-95399	931080590000	875	16	22	M16	1.625"-4ACME	10"-300C F6a
39	3-V-N685-95399	931101210000	877	16	22	M16	1.375"-4ACME	10"-300C F316
40	3-V-N189-95399	931106350000	800	16	22	M16	1.375"-4ACME	8"-300C F316
41	3-V-N688-95399	931106290000	660	16	22	M16	1.25"-4ACME	6"-300C F316

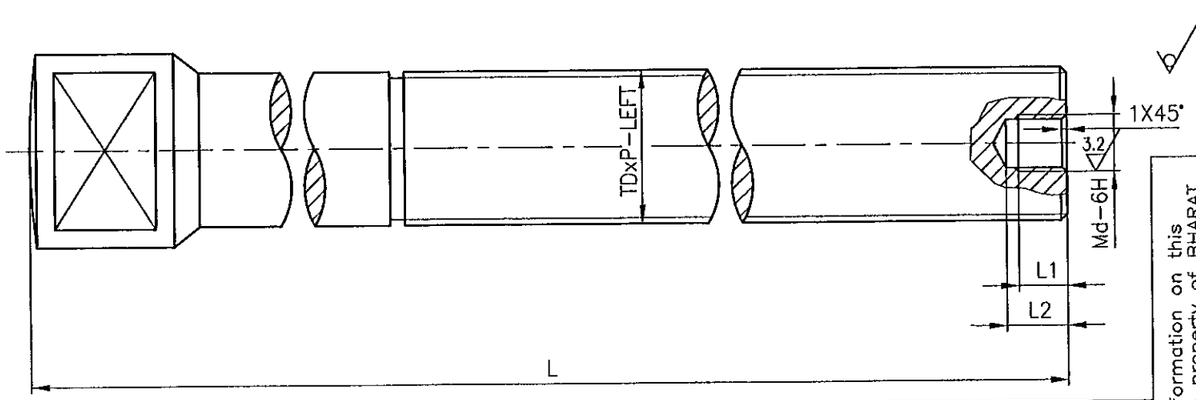

REV	DATE	ALTERED K.P.Leon
14	01.07.02	CHD & APPD

SL. NUMBER 40 &41 NCLUDED.

CAUTION: The information on this document is the property of BHARAT HEAVY ELECTRICALS LTD. It must not be used directly or indirectly in any way detrimental to the interest of the company.

NO OFF	DESCRIPTION	MATL CODE	MATL SPECN	HEAT TREATMENT	SCRAP SORT	NET WT (kg)	GROSS WT (kg)	DRAWING No	ITEM No

TYPE OF PRODUCT OR NAME OF CUSTOMER/PROJECT: CS

DRAWING RETRACED WITH REV.14 ON 01.07.02

10X

BHARAT HEAVY ELECTRICALS LTD.
UNIT: HIGH PRESSURE BOILER PLANT.
TIRUCHIRAPALLI 620014.
365-121

	NAME	SIGN	DATE	NO.OF VAR.
DRN	T.R.RAMAMURTHY	T.R.R	01.07.02	–
CHD	P.BOOMINATHAN		01.07.02	
APPD	K.S.RAMAN		01.07.02	

DEPT	SCALE	WEIGHT (KG).	REFERENCE INFORMATIONS	NO. OF ITEMS
VL	NTS	--	CAD:C395399	--
CODE 320				

TITLE	CARD CODE	DRAWING NO.	REV
STEM (MACH-INDI)	U 01	3-V-0000-95399	14

Size A3

DRAWING NO. 2-V-R074-15707/1

ALL DIMENSIONS ARE IN MILLIMETRES. FOR TOLERANCES OF UNTOLERANCED DIMENSIONS DURING MANUFACTURE REFER RELEVANT QCP / QP

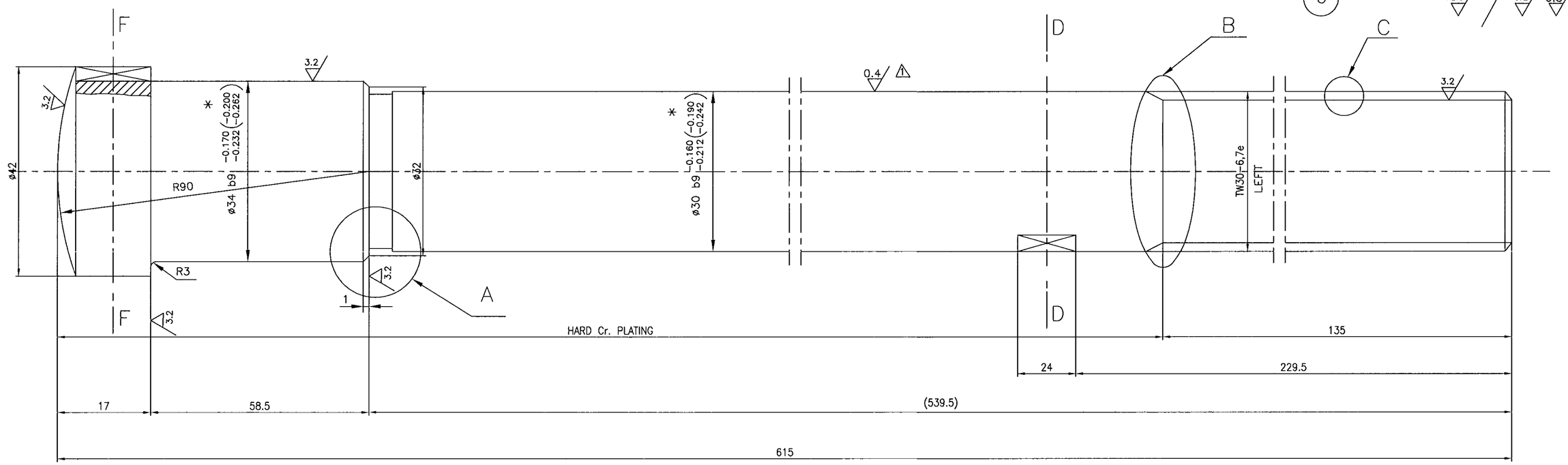

DETAIL-A

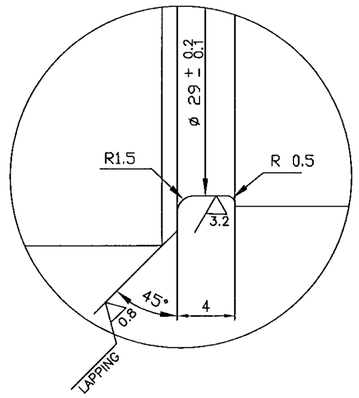

THE ABOVE UNDERCUT SHALL BE SMOOTHLY FINISHED SO THAT THE CUT SHOULD NOT BE NOTCH EFFECTED

ALTERNATE TO DETAIL-B

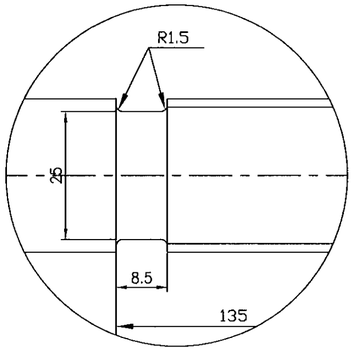

SECTION-FF

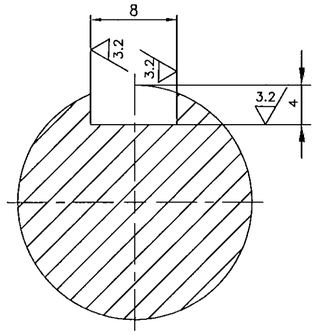

SECTION-DD

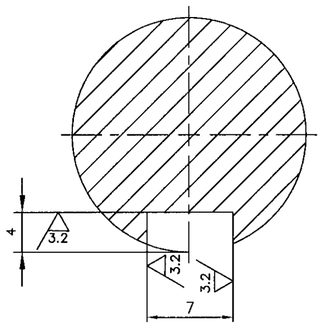

DETAIL-C

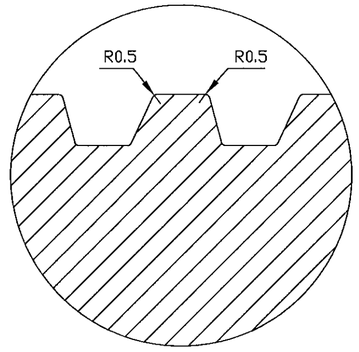

NOTES:

01. HARDNESS 241 TO 321 BHN.
02. MATERIAL SHOULD BE AS PER LATEST APPLICABLE QUALITY WORK INSTRUCTION
03. * DIMENSION PRIOR TO PLATING

SL. NO.	DRAWING NUMBER	MATERIAL SPECN.	SUGG. SIZE	COMP. CODE / MATL. CODE	GROSS WT.(Kg)	SCRAP SORT
1	2-V-R074-15707/1	OHTARON ,QT PRODUCT ATTEST	ø50X630	931169650000 / ——	9.72	40

No OFF	DESCRIPTION	MATL CODE	MATL SPECN	HEAT TREATMENT	SCRAP SORT	NET WT (kg)	GROSS WT (kg)	DRAWING No	ITEM No

TYPE OF PRODUCT OR NAME OF CUSTOMER/PROJECT: TA

RETRACED WITH REV.1 ON 24.12.03

BHARAT HEAVY ELECTRICALS LTD.,
UNIT: HIGH PRESSURE BOILER PLANT.
TIRUCHIRAPALLI -620014.
365-120

	NAME	SIGN	DATE	NO.OF VAR.
DRN	V.Bairavan		24.12.03	
CHD	K.Rajasekar		24.12.03	
APPD	M.Rajakumar		24.12.03	

DEPT VL | CODE 320 | SCALE NTS | WEIGHT (KG). 3.54 | REFERENCE INFORMATIONS | NO. OF ITEMS

TITLE: STEM

3426B-6 65/1500

CARD CODE U 01

DRAWING NO. 2-V-R074-15707 REV 1

REV	DATE	ALTERED VB
1	24.12.03	CHD & APPD MRK

ZONE 1 SURFACE FINISH 0.4 WAS 0.8

DCP.No.800270

CAUTION: The information on this document is the property of BHARAT HEAVY ELECTRICALS LTD. It must not be used directly or indirectly in any way detrimental to the interest of the company.

Size A2

DRAWING NO. 2-V-0000-15043/7

ALL DIMENSIONS ARE IN MILLIMETRES. FOR TOLERANCES OF UNTOLERANCED DIMENSIONS DURING MANUFACTURE REFER RELEVANT QCP / QP

SL No.	DRAWING No.	MATL SPCEN.		SUGGESTED SIZE	MATL. CODE / COMP. CODE	GROSS WT(Kg.)	SCRAP SORT	TOA DRAWING No.	DIMENSIONS øD	øD1 b9 (DIMENSION PRIOR TO PLATING)	øD2	øD3 b9 (DIMENSION PRIOR TO PLATING)	øD4	øD5	TW-N 7e	MD	Sq.S h8	L	L1	L2	(L3)	L4	L5	L6	L7	L8	R	øD6		FINISHED WT (KG)
01	2-V-G001-15043/4	OHATRON	QT,PRODUCT ATTEST	ø60x625	– / 93 111 246 0000	13.8	40	T-E65559(0210)	55	46 $^{-0.180}_{-0.242}$ ($^{-0.210}_{-0.272}$)	44	42 $^{-0.180}_{-0.242}$ ($^{-0.210}_{-0.272}$)	41 $^{+0.2}_{-0.1}$	36	TW 42-3.5	M24	29 $^{0}_{-0.033}$	610	21	74	(453)	36	26	3	191	6	150	34		6.62
02	2-V-G003-15043/4	OHATRON		ø60x660	– / 93 111 247 0000	14.65		T-E65567(0323)	55	46 $^{-0.180}_{-0.242}$ ($^{-0.210}_{-0.272}$)	44	42 $^{-0.180}_{-0.242}$ ($^{-0.210}_{-0.272}$)	41 $^{+0.2}_{-0.1}$	36	TW 42-3.5	M24	29 $^{0}_{-0.033}$	642	21	74	(485)	36	26	3	186	6	150	34		6.96
03	2-V-G004-15043/4	OHATRON		ø50x590	– / 93 111 248 0000	9.09		4-E09429(0007)	46	38 $^{-0.170}_{-0.232}$ ($^{-0.200}_{-0.262}$)	36	34 $^{-0.170}_{-0.232}$ ($^{-0.200}_{-0.262}$)	33 $^{+0.2}_{-0.1}$	30	TW 34-4	M20	23 $^{0}_{-0.033}$	575	17	62	(444)	30	22	2.5	160	4	120	27		4.11
04	2-V-G033-15043/4	OHATRON		ø50x560	– / 93 111 249 0000	8.71		T-E65563(0526)	46	38 $^{-0.170}_{-0.232}$ ($^{-0.200}_{-0.262}$)	36	34 $^{-0.170}_{-0.232}$ ($^{-0.200}_{-0.262}$)	33 $^{+0.2}_{-0.1}$	30	TW 34-4	M20	23 $^{0}_{-0.033}$	543	17	62	(412)	30	22	2.5	160	4	120	27		3.73
05	2-V-G041-15043/4	OHATRON		ø50x505	– / 93 111 250 0000	7.78		T-E65560(0865)	44	36 $^{-0.170}_{-0.232}$ ($^{-0.200}_{-0.262}$)	34	32 $^{-0.170}_{-0.232}$ ($^{-0.200}_{-0.262}$)	31 $^{+0.2}_{-0.1}$	30	TW 32-4	M20	23 $^{0}_{-0.033}$	488	16	58	(362)	30	22	2.5	160	4	120	25		2.97
06	2-V-G045-15043/4	OHATRON		ø50x530	– / 93 111 251 0000	8.17		T-E65558(0883)	46	38 $^{-0.170}_{-0.232}$ ($^{-0.200}_{-0.262}$)	36	34 $^{-0.170}_{-0.232}$ ($^{-0.200}_{-0.262}$)	33 $^{+0.2}_{-0.1}$	30	TW 34-4	M20	23 $^{0}_{-0.033}$	516	17	62	(385)	30	22	2.5	165	4	120	27		3.70
07	2-V-G145-15043/4	OHATRON		ø55x615	– / 93 113 610 0000	11.48		T-E65565(2177)	50	42 $^{-0.180}_{-0.242}$ ($^{-0.210}_{-0.272}$)	40	38 $^{-0.170}_{-0.232}$ ($^{-0.200}_{-0.262}$)	37 $^{+0.2}_{-0.1}$	34	TW 38-3.5	M22	26 $^{0}_{-0.033}$	600	19	68	(455)	34	24	2.5	170	6	150	30		5.40
08	2-V-G146-15043/2	OHATRON		ø55x665	– / 93 119 198 0000	12.41		–	50	42 $^{-0.180}_{-0.242}$ ($^{-0.210}_{-0.272}$)	40	38 $^{-0.170}_{-0.232}$ ($^{-0.200}_{-0.262}$)	37 $^{+0.2}_{-0.1}$	34	TW 38-3.5	M22	26 $^{0}_{-0.033}$	650	19	68	(505)	34	24	2.5	220	6	150	30		5.85
09	2-V-G046-15043/2	OHATRON		ø50x585	– / 9 119 199 0000	9.02		–	46	38 $^{-0.170}_{-0.232}$ ($^{-0.200}_{-0.262}$)	36	34 $^{-0.170}_{-0.232}$ ($^{-0.200}_{-0.262}$)	33 $^{+0.2}_{-0.1}$	30	TW 34-4	M20	23 $^{0}_{-0.033}$	571	17	62	(440)	30	22	2.5	220	4	120	27		4.09
10	2-V-G005-15043/2	OHATRON		ø60x700	– / 93 119 267 0000	15.5		–	55	46 $^{-0.180}_{-0.242}$ ($^{-0.210}_{-0.272}$)	44	42 $^{-0.180}_{-0.242}$ ($^{-0.210}_{-0.272}$)	41 $^{+0.2}_{-0.1}$	36	TW 42-3.5	M24	29 $^{0}_{-0.033}$	685	21	74	(528)	36	26	3	266	6	150	34		7.44
11	2-V-G011-15043/2	OHATRON		ø60x725	– / 93 119 268 0000	16.1		–	55	46 $^{-0.180}_{-0.242}$ ($^{-0.210}_{-0.272}$)	44	42 $^{-0.180}_{-0.242}$ ($^{-0.210}_{-0.272}$)	41 $^{+0.2}_{-0.1}$	36	TW 42-3.5	M24	29 $^{0}_{-0.033}$	707	21	74	(550)	36	26	3	251	6	150	34		7.67
12	2-V-G014-15043/2	OHATRON		ø50x645	– / 93 119 269 0000	9.95		–	46	38 $^{-0.170}_{-0.232}$ ($^{-0.200}_{-0.262}$)	36	34 $^{-0.170}_{-0.232}$ ($^{-0.200}_{-0.262}$)	33 $^{+0.2}_{-0.1}$	30	TW 34-4	M20	23 $^{0}_{-0.033}$	630	17	62	(499)	30	22	2.5	215	4	120	27		4.50
13	2-V-G034-15043/2	OHATRON		ø50x610	– / 93 119 270 0000	9.41		–	46	38 $^{-0.170}_{-0.232}$ ($^{-0.200}_{-0.262}$)	36	34 $^{-0.170}_{-0.232}$ ($^{-0.200}_{-0.262}$)	33 $^{+0.2}_{-0.1}$	30	TW 34-4	M20	23 $^{0}_{-0.033}$	593	17	62	(462)	30	22	2.5	210	4	120	27		4.09
14	2-V-G042-15043/2	OHATRON		ø50x565	– / 93 119 271 0000	8.72		–	44	36 $^{-0.170}_{-0.232}$ ($^{-0.200}_{-0.262}$)	34	32 $^{-0.170}_{-0.232}$ ($^{-0.200}_{-0.262}$)	31 $^{+0.2}_{-0.1}$	30	TW 32-4	M20	23 $^{0}_{-0.033}$	548	16	58	(422)	30	22	2.5	220	4	120	25		3.35

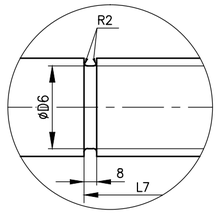

ALTERNATE TO DETAIL – F

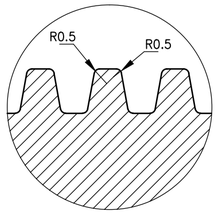

DETAIL – E

8

12.5 / 3.2 / 0.8 / 0.4

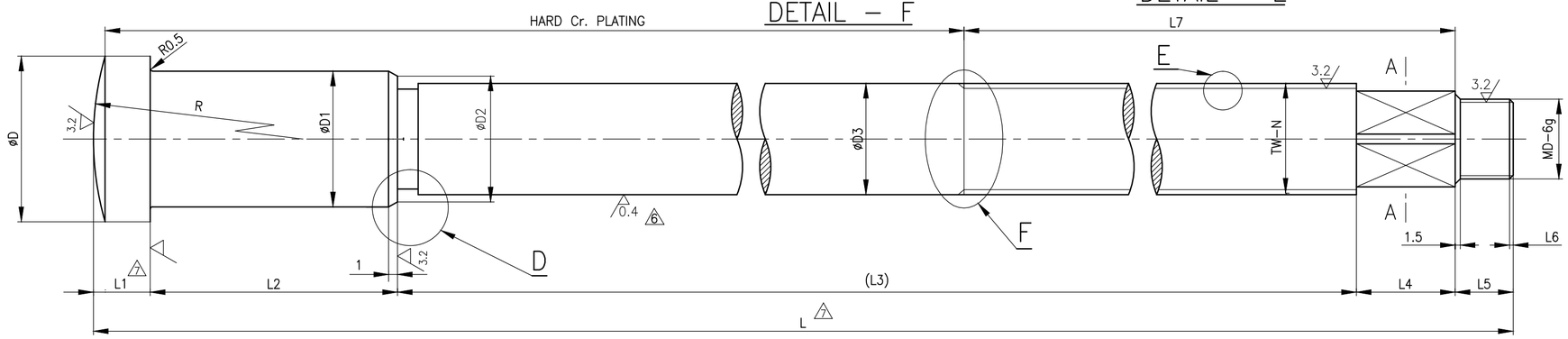

SECTION – AA

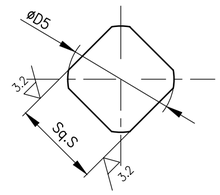

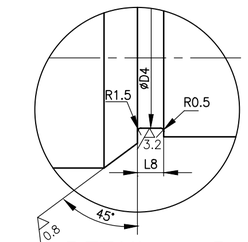

DETAIL – D

THE ABOVE UNDERCUT SHALL BE SMOOTHLY FINISHED.
SO THAT THE CUT SHOULD NOT BE NOTCH EFFECTED.

NOTES:

1. HARDNESS FOR OHTARON MATERIAL – 241 TO 321 BHN.
2. MATL. SHALL BE AS PER LATEST APPLICABLE QUALITY WORK INSTRUCTION

RETRACED WITH REV.6 ON 24.12.03

REV	DATE	ALTERED VB	REV	DATE	ALTERED VB
7	06.05.14	CHD & APPD SSK & KRS	6	24.12.03	CHD & APPD MRK
ZONE	EXTENSION LINE FOR L & L1 DIMENSIONS CORRECTED DCP No.801738		ZONE 6	SURFACE FINISH 0.4 WAS 0.8 DCP.No.800270	

CAUTION: The information on this document is the property of BHARAT HEAVY ELECTRICALS LTD. It must not be used directly or indirectly in any way detrimental to the interest of the company.

No OFF	DESCRIPTION	MATL CODE	MATL SPECN	HEAT TREATMENT	SCRAP SORT	NET WT (kg)	GROSS WT (kg)	DRAWING No	ITEM No

TYPE OF PRODUCT OR NAME OF CUSTOMER/PROJECT: TA

BHARAT HEAVY ELECTRICALS LTD., UNIT: HIGH PRESSURE BOILER PLANT. TIRUCHIRAPALLI -620014.

	NAME	SIGN	DATE	NO.OF VAR.
DRN	V.BAIRAVAN		24.12.03	
CHD	K.RAJASEKRAN		24.12.03	
APPD	M.RAJAKUMAR		24.12.03	

365-120

DEPT VL | CODE 320 | SCALE N T S | WEIGHT (KG). | REFERENCE INFORMATIONS | NO. OF ITEMS

TITLE: STEM | CARD CODE U 01 | DRAWING NO. 2-V-0000-15043 | REV 7

Size A2

FOR TOLERANCES OF UNTOLERANCED DIMENSIONS DURING MANUFACTURE REFER RELEVANT QCP/QP

FIRST ANGLE PROJECTION (ALL DIMENSIONS IN MILLIMETRES)

CAUTION THE INFORMATION ON THIS DOCUMENT IS THE PROPERTY OF BHARAT HEAVY ELECTRICALS LTD. IT MUST NOT BE USED DIRECTLY OR INDIRECTLY IN ANY WAY DETRIMENTAL TO THE INTEREST OF THE COMPANY.

DRAWING NO. 3-V-0000-06163/08

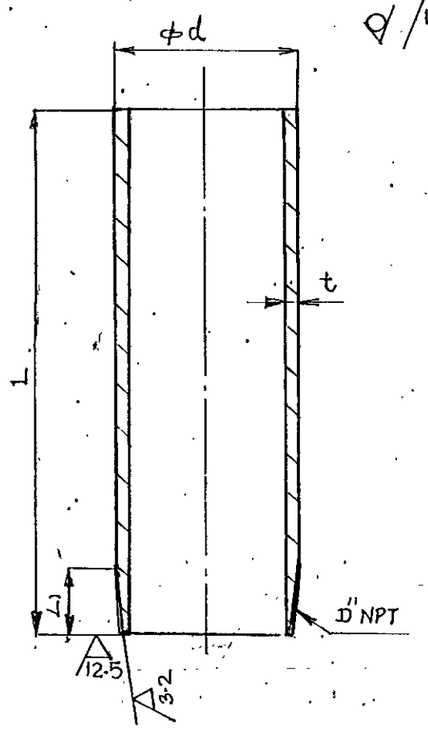

SL NO	DRAWING NO.	MATL SPECN.	MATL. SIZE	MATL. CODE	SCRAP SORT	RAW MATL. WT.	D" NPT	TPI	φd	t	L	L1	FINISH WT.	APPLICABLE TYPE NO.	REMARKS
1	3-V-1084-06163/01	IS:2062 FE410 WB	PIPE φ60.8X4.5-175	15038091	10	1.09	2" NPT	11 1/2	60.8	4.5	175	27	1.09	1084,1085	93060893
2	3-V-1083-06163/01		PIPE φ89.5X4.85-390	15038073		3.95	3" NPT	8	89.5	4.85	390	41	3.95	1083	93060859
3	3-V-1897-06163/01		PIPE φ89.5X4.85-150	15038073		1.50	3" NPT	8	89.5	4.85	150	41	1.50	1897, 1991 1992	93060902
4	3-V-1700-06163/01		PIPE φ60.8X4.5-350	15038091		2.18	2" NPT	11 1/2	60.8	4.5	350	27	2.18	1700	93060995
5	3-V-1706-06163/01	SA 106 GR-B	PIPE φ108X8-200	15082164		3.92	3 1/2" NPT	8	108	8	200	43	3.92	1706, 1707	93060900
6	3-V-1705-06163/02	SA 106 GR.B	PIPE φ114.3X6.02-220	15082158		3.53	4" NPT	8	114.3	6.02	200	44	3.2	1705	93060996
(b) 7	3-V-1027-06163/01	IS:2062 FE410 WB	PIPE φ60.8X4.5-100	15038091		0.72	2" NPT	11 1/2	60.8	4.5	100	27	0.72	1027	93061243
(b) 8	3-V-1626-06163/01		PIPE φ89.5X4.85-250	15038073		2.53	3" NPT	8	89.5	4.85	250	41	2.53	1626	93100004
(c) 9	3-V-1780-06163/01	SA 106 GR-B	PIPE φ108X8-352	15082164		6.89	3 1/2" NPT	8	108	8	350	43	6.88	1780	93061167
(c) (e) 10	3-V-1782-06163/03		PIPE φ114.3X6.02-470	15082158		7.54	4" NPT	8	114.3	6.02	450 (e) ~~400~~	44	7.22	1782	93061165
(d) 11	3-V-B510-06163/02		PIPE φ114.3X6.02-120			1.93	4" NPT	8	114.3	6.02	100	44	1.6	B510	93101452
12	3-V-C094-06163/01		PIPE φ76.1X7.1-155			2.06					150		2.04	C094	93101583
13	3-V-C095-06163/01	SA 210 GR.A1	PIPE φ76.1X7.1-255	1508612466		3.42	2 1/2" NPT	8	76.1	7.1	250	39.9	3.4	C095	93101584
14	3-V-C065-06163/01		PIPE φ76.1X7.1-355			4.78					350		4.76	C065	93101585
15	3-V-B530-06163/02	SA 106 Gr.B	φ114.3X6.02-220	15082158		3.53	4" NPT	8	114.3	6.02	200	44	3.2	B530	93102230

VARIANT NO.	ITEM NO.	DESCRIPTION	STD	DRAWING NO.	ITEM NO.	MATL CODE	A/C	UNIT	UNIT WT	GS
					VAR NO.	MATL SPEC			QTY	

REV	DATE	ALTD / CHKD	REV	DATE	ALTD / CHKD	REV	DATE	ALTD / CHKD
07	25.11.96	ALTD: T.C. / CHKD: BAPPD	08	2.7.98	ALT. R.L. / CHK & APPD. M.R.K.			

NOTES UPDATED

MATL. SA 106 GR.B WAS IS 2062 FE410 WB FOR SL.NOS. 6, 10, 11 & 15. DCN No. HM 0329

DCN NO. CS:0632

REV	DATE	ALTD / CHD	REV	DATE	ALTD / CHKD	REV	DATE	ALTD / CHD
06	25.8.88	ALTD: N.P.ESWAR / CHD: N.NAGARAJ	05	4.3.87	ALTD: N.D.PAL / CHKD: S.KUMAR	04	25-8-86	ALTD: S.J.WESLEY / CHD: N.NAGARAJAN
	SL NO.15 INCLUDED		(e)		1. INDEXED DIMENSIONS ALTERED 2. SL.NO.12, 13, 14 INCLUDED	(d)		SL.No. 11 INCLUDED

REV	DATE	ALTERED / CHECKED	REV	DATE	ALTERED / CHECKED	REV	DATE	ALTERED / CHECKED
03	15.12.83	ALTERED: L.R.SAMY. / CHECKED: S.KUMAR	02	17.9.83	ALTERED: N.D.PAL / CHECKED: S.KUMAR	01	28-10-82	ALTERED D.VIJAY / CHECKED S.KUMAR
(c)	SL.No.9 AND 10 INCLUDED		(b)		SL NO. 7 and 8 INCLUDED	(a)		SL NO: 3,4,5 & 6 INCLUDED

TYPE OF PRODUCT OR NAME OF CUSTOMER/PROJECT

MICROFILMED ON 55418 B&W

Bharat Heavy Electricals Ltd.,
BOILER PLANT UNIT
TIRUCHIRAPALLI-620 014

	NAME	SIGN	DATE
DRN	N.D. PAL		17-3-82
CHD	D. VIJAY		17-3-82
APPD	S. KUMAR		17-3-82

NO. OF VAR

DEPT.	GRADE OF UNTOL. DIM	SCALE	WEIGHT (kg)	REF TO ASSY / OLD DRG	ITEM NO.
VL		NTS	—		
CODE 320					

TITLE	CARD CODE	DRAWING NO.	REV
TUBE	U 01	3-V-0000-06163	08

Size A3

05-229/C

TP-DG-1-V-2885-02595
CORPORATE DRG ID

FIRST ANGLE PROJECTION (ALL DIMENSIONS IN MILLIMETRES)

DRAWING NO 1-V - 2885-02595/2

CAUTION THE INFORMATION ON THIS DOCUMENT IS THE PROPERTY OF BHARAT HEAVY ELECTRICALS LTD. IT MUST NOT BE USED DIRECTLY OR INDIRECTLY IN ANY WAY DETRIMENTAL TO THE INTEREST OF THE COMPANY.

SECTION-AA

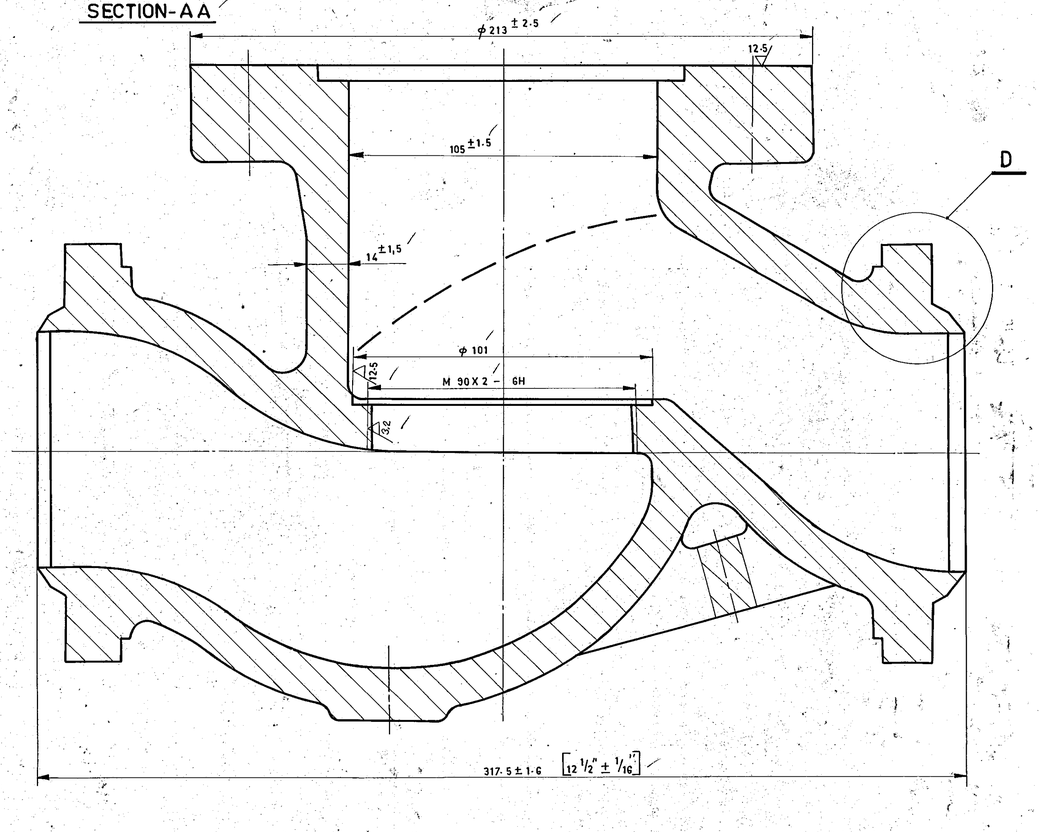

SECTION-BB

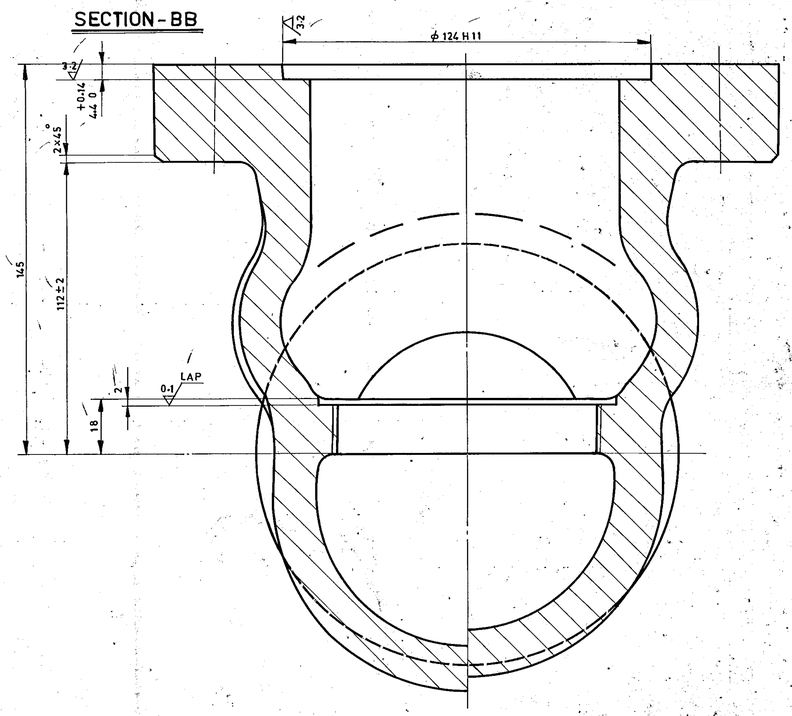

12.5 / 6.3 / 3.2 / 0.1

ϕ 124 H11	+0.250 / 0

SECTION-CC

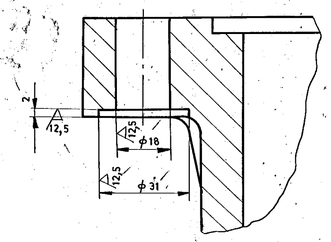

DETAIL-D

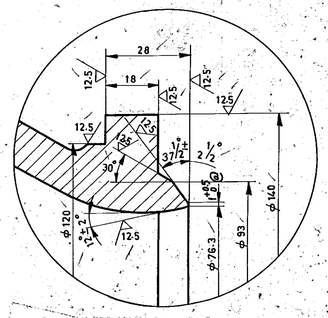

EDGE PREPARATION

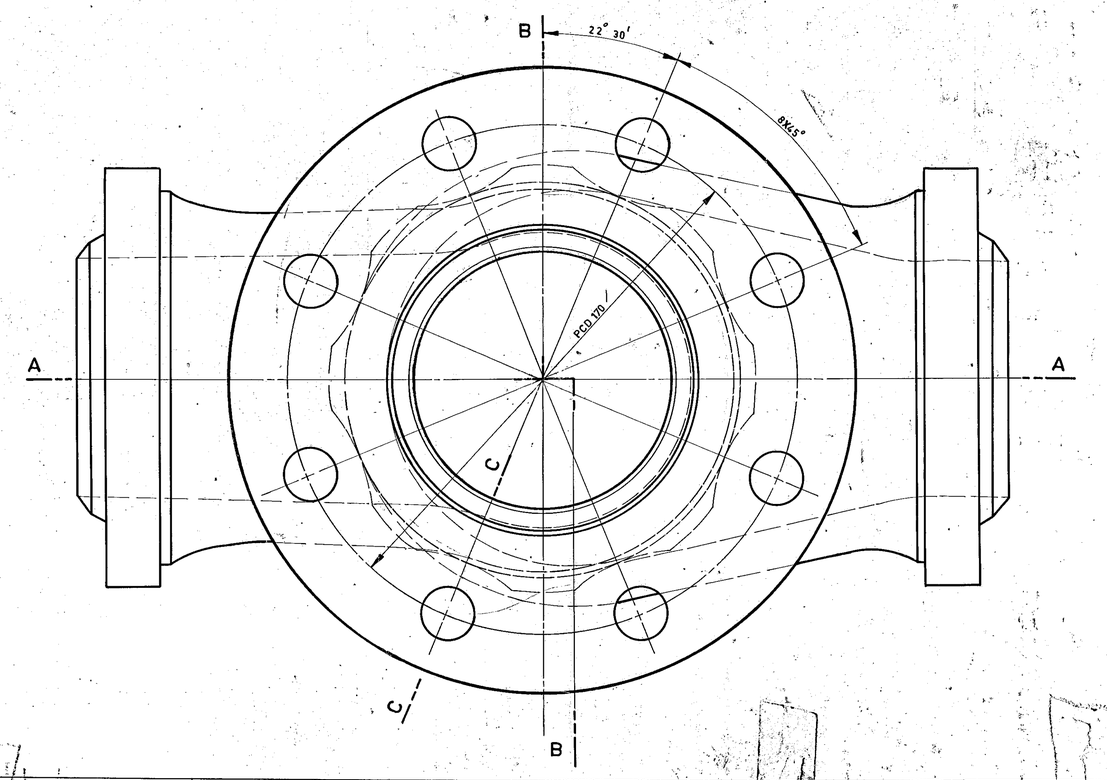

NO. OFF	DESCRIPTION	MATL. CODE	MATL. SPECN.	HEAT TREATMENT	SCRAP SORT	NET WT (KG)	GROSS WT (KG)	DRG. NO.	ITEM NO.
1	BODY C.D. NO 2-V-2885-0823/R	92 026 942	ASTM A216 GR WCB ATTEST	NR	10	32.0	33.0	1-V-2885-02595/2	

BHARAT HEAVY ELECTRICALS LIMITED
BOILER PLANT UNIT, TIRUCHIRAPALLI-620 014

05-227/B

DEPT.	CODE	SCALE	WEIGHT (KG)	REF. TO ASSY. DRG.	IT. NO.
VL	320	1:1	32.0	3" - 300-CL- BW- RV	

TITLE: BODY
3"- 300 CLASS

	NAME	SIGN	DATE
DRAWN	007		
CHECKED	MRK		23/5/86
APPROVED	S.KUMAR		23/5

DIMENSIONS TO BE CONTROLLED WITHIN LIMITS AS SHOWN, MACHINING TOLERANCE ±0.25 mm UNLESS OTHERWISE SHOWN NON-MACHINED TOLERANCE ±

CARD CODE U01 | DRAWING NO. 1-V-2885-02595 | REV. 2

007

REV	DATE	ALTERED / CHD
2	30-05-86	ALTERED: CHD:

BODY CASTING DRG. No. CHANGED AS 1-V-2885-02638/R.

REV.	DATE	ALTERED / CHECKED
01	23-01-86	ALTERED KNC. CHECKED MRK

ZONE @ DIMENSION $1^{+0.5}_{0}$ INCLUDED IN DETAIL-D

TP-DG-1-V-2885-02595
CORPORATE DRG ID

DRAWING NO. 2-V-0000-05969/02

ALL DIMENSIONS ARE IN MILLIMETRES. FOR TOLERANCES OF UNTOLERANCED DIMENSIONS DURING MANUFACTURE REFER RELEVANT QCP / QP

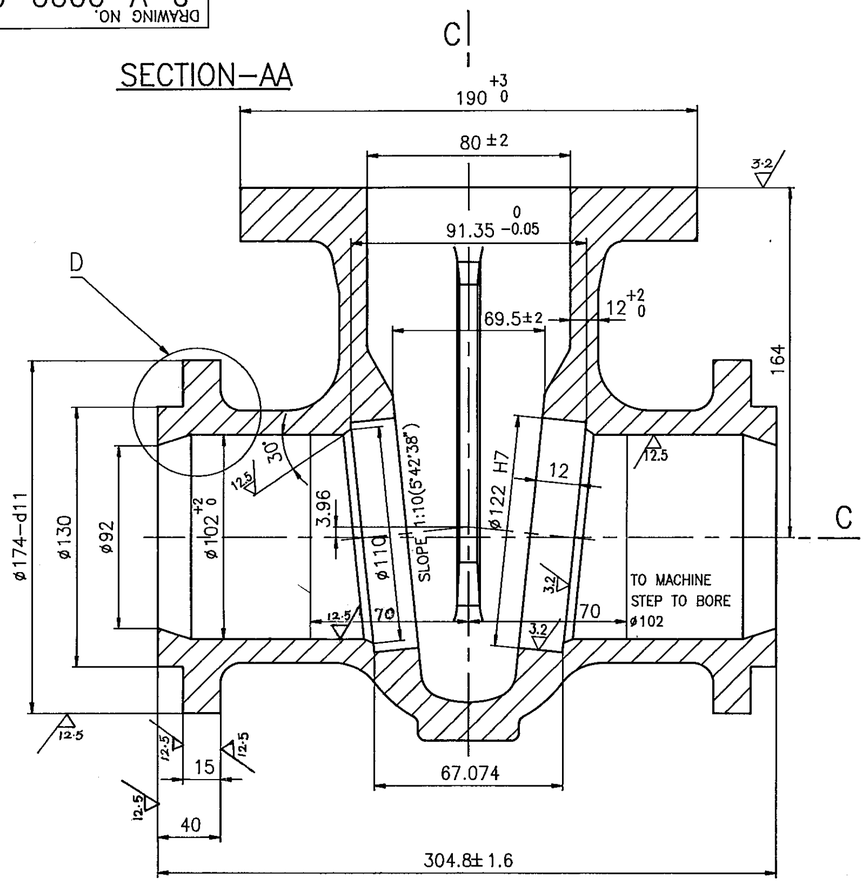

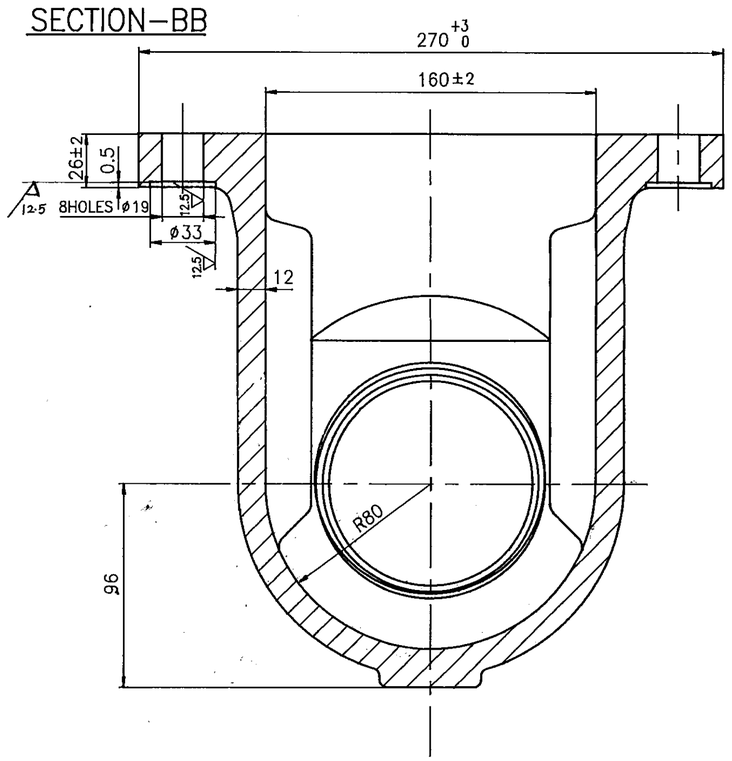

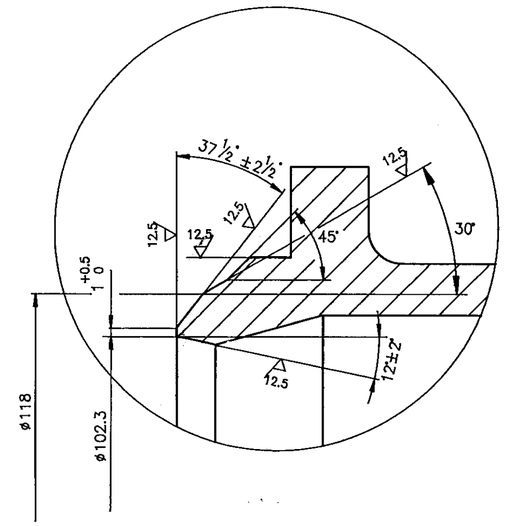

ø122–H7	+0.040 / 0
ø174–d11	−0.145 / −0.395

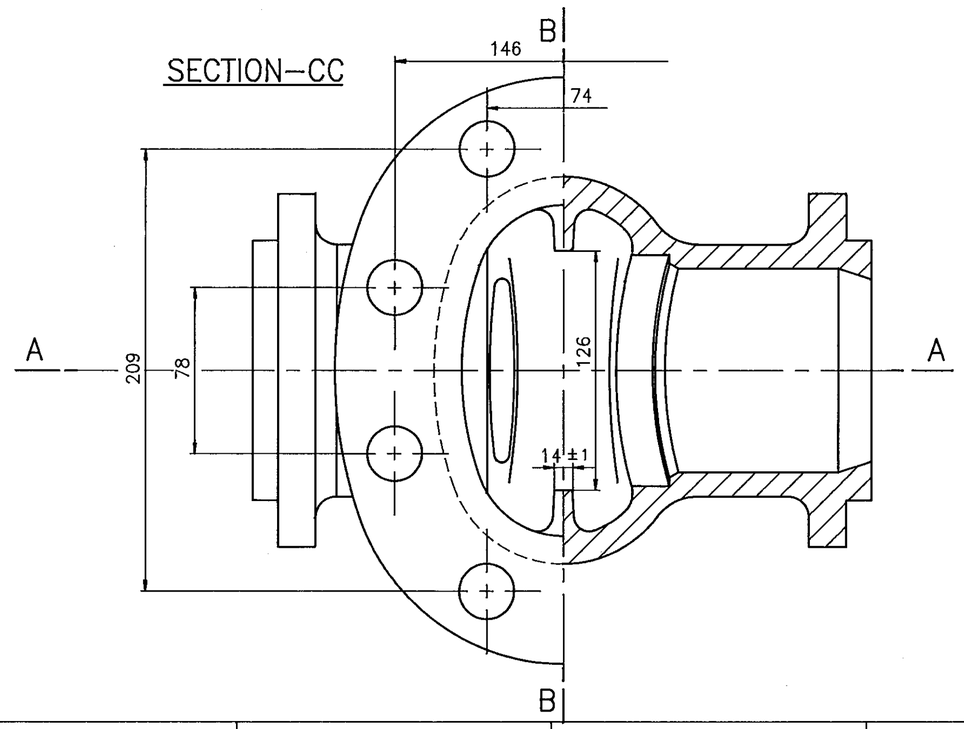

SL. No.	DESCRIPTION	MATL CODE	MATL SPECN	HEAT TREATMENT	SCRAP SORT	NET WT (kg)	GROSS WT (kg)	DRAWING No / COMP.CODE	ITEM No
~~5~~	~~CASTING DRG NO: 2-V-N680-05878R~~	~~92 200 934~~	~~A351 CF8 (ATTEST)~~	~~SH~~	~~46~~	~~27~~	~~31~~	~~2-V-N680-05969~~ ~~931083140000~~	~~01~~
4	CASTING DRG.No. 2.V.N297.05878R	92 200 304	A217 WC9 (ATTEST)	N & T	20	27.0	31.0	2.V.N297.05969 / 931060090000	01
3	CASTING DRG.No. 2.V.N296.05878R	92 200 303	A217 WC6 (ATTEST)	N & T	20	27.0	31.0	2.V.N296.05969 / 931060080000	01
2	CASTING DRG.No. 2.V.N295.05878R	92 200 302	A216 WCC (ATTEST)	NORMALISED	10	27.0	31.0	2.V.N295.05969 / 931060070000	01
1	CASTING DRG.No. 2.V.N294.05878R	92 200 301	A216 WCB ATTEST	NORMALISED	10	27.0	31.0	2.V.N294.05969 / 931060060000	01

REV	DATE	ALTD:- T.L.
02	02.12.98	CHD & APPD:-

SL.No. 5 DELETED

REV	DATE	ALTERED: N.DHANAPAL
01	26.09.97	CHD & APPD

SL.No. 5 INCLUDED.

CAUTION: The information on this document is the property of BHARAT HEAVY ELECTRICALS LTD. It must not be used directly or indirectly in any way detrimental to the interest of the company.

TYPE OF PRODUCT OR NAME OF CUSTOMER/PROJECT

BHARAT HEAVY ELECTRICALS LTD.
UNIT: HIGH PRESSURE BOILER PLANT.
TIRUCHIRAPALLI -620014.

	NAME	SIGN	DATE	NO.OF VAR.
DRN	T.R.R.MURTHY		21.10.95	–
CHD	N.DHANAPAL		2-01-96	
APPD	A.VISWANATHAN		3.1.96	

DEPT	SCALE	WEIGHT (KG).	REFERENCE INFORMATIONS	NO. OF ITEMS
VL	NTS.	–	CAD:C205969	–
CODE 320				

TITLE	CARD CODE	DRAWING NO.	REV
BODY (4" C150 BW)	U 01	2-V-0000-05969	02

Size A2

DRAWING NO. 2-V-0000-05950

ALL DIMENSIONS ARE IN MILLIMETRES. FOR TOLERANCES OF UNTOLERANCED DIMENSIONS DURING MANUFACTURE REFER RELEVANT QCP / QP

12.5 3.2

ø190-H11	+0.290 / 0
ø124-H7	+0.040 / 0
ø194-h11	0 / -0.290

SECTION-AA

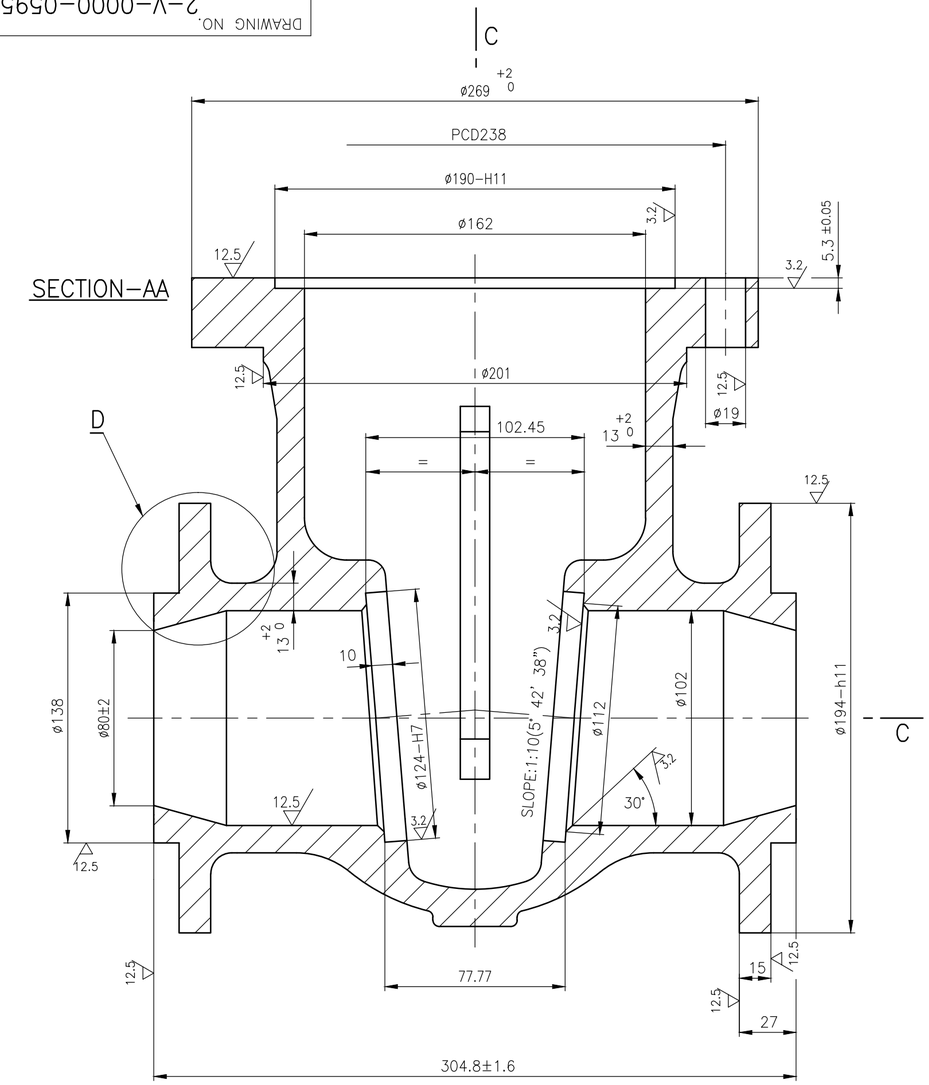

SECTION-BB

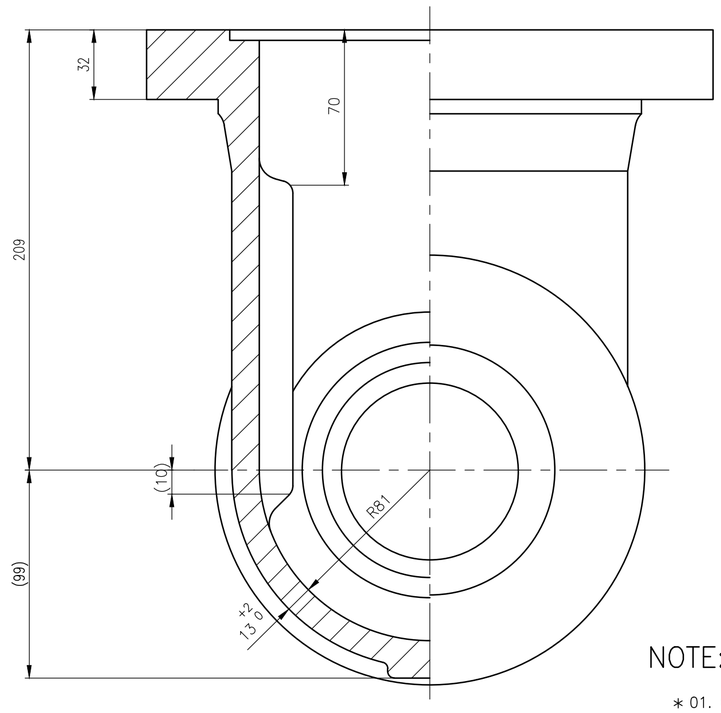

DETAIL-D

FOR STANDARD VALVE ONLY

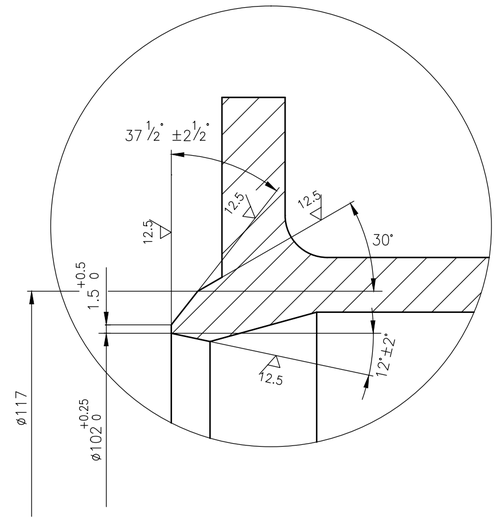

SECTION-CC

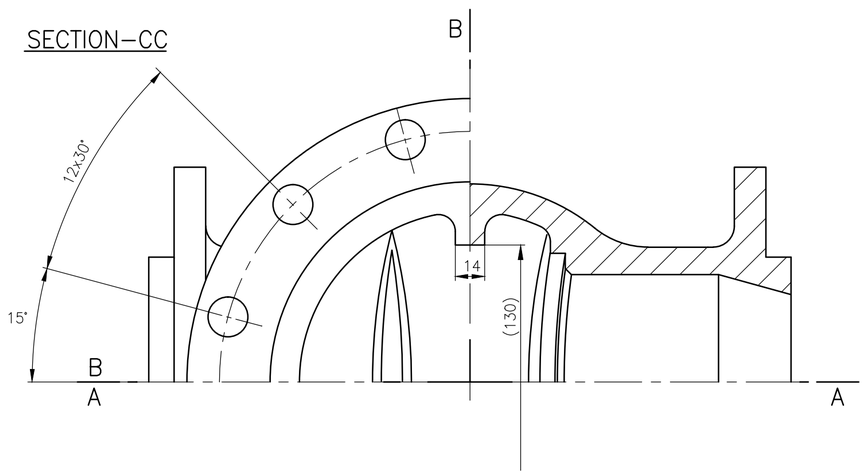

NOTE:-

* 01. QUALITY PROCEDURE AS APPLICABLE FOR SPECIAL CLASS RATING.

*	SL. No.	DESCRIPTION	MATL CODE	MATL SPECN	HEAT TREATMENT	SCRAP SORT	NET WT (kg)	GROSS WT (kg)	DRAWING No / COMPONENT CODE	ITEM No
*	5	CASTING	92 203 229	SA216 WCB	NORMALISED	10	68.0	73.0	2.V.NH92.05950 / 932033260000	01
	4	CASTING	92 200 266	SA216 WCB	NORMALISED	10	68.0	73.0	2.V.N251.05950/1 / 931059570000	01
	3	CASTING	92 200 267	SA216 WCC	NORMALISED	10	68.0	73.0	2.V.N252.05950/1 / 931059560000	01
	2	CASTING	92 200 268	SA217 WC6	N & T	20	68.0	73.0	2.V.N253.05950/1 / 931059550000	01
	1	CASTING	92 200 269	SA217 WC9	N & T	20	68.0	73.0	2.V.N254.05950/1 / 931058840000	01

REV	DATE	ALTERED	REV	DATE	ALTERED
03	06.03.14	S.SARANYA CHD & APPD SSK & K.R.S	02	18.03.13	P.NALLATHAMBI CHD & APPD SSK & KRS

SL.No. 05 INCLUDED

ZONE

DETAIL D DIMENSION ø102 & ø117 WERE ø92 & ø111.

DCP: 801483

CAUTION: The information on this document is the property of BHARAT HEAVY ELECTRICALS LTD. It must not be used directly or indirectly in any way detrimental to the interest of the company.

TYPE OF PRODUCT OR NAME OF CUSTOMER/PROJECT: DRAWING REDRAWN WITH REV. 02 ON 18.03.13

BHARAT HEAVY ELECTRICALS LTD., UNIT: HIGH PRESSURE BOILER PLANT. TIRUCHIRAPALLI -620014.

365-120

	NAME	SIGN	DATE	NO.OF VAR.
DRN	T.R.R.MURTHY		08.10.95	
CHD	N.DHANAPAL		08.10.95	–
APPD	A.VISWANATHAN		13.10.95	

DEPT VL

CODE 320

SCALE NTS

WEIGHT (KG). --

REFERENCE INFORMATIONS: CAD REF:C205950

NO. OF ITEMS –

TITLE: BODY (4"-C300)

CARD CODE U 01

DRAWING NO. 2-V-0000-05950

REV 03

Size A2

DRAWING NO. 2-V-0000-05966/0

ALL DIMENSIONS ARE IN MILLIMETRES. FOR TOLERANCES OF UNTOLERANCED DIMENSIONS DURING MANUFACTURE REFER RELEVANT QCP / QP

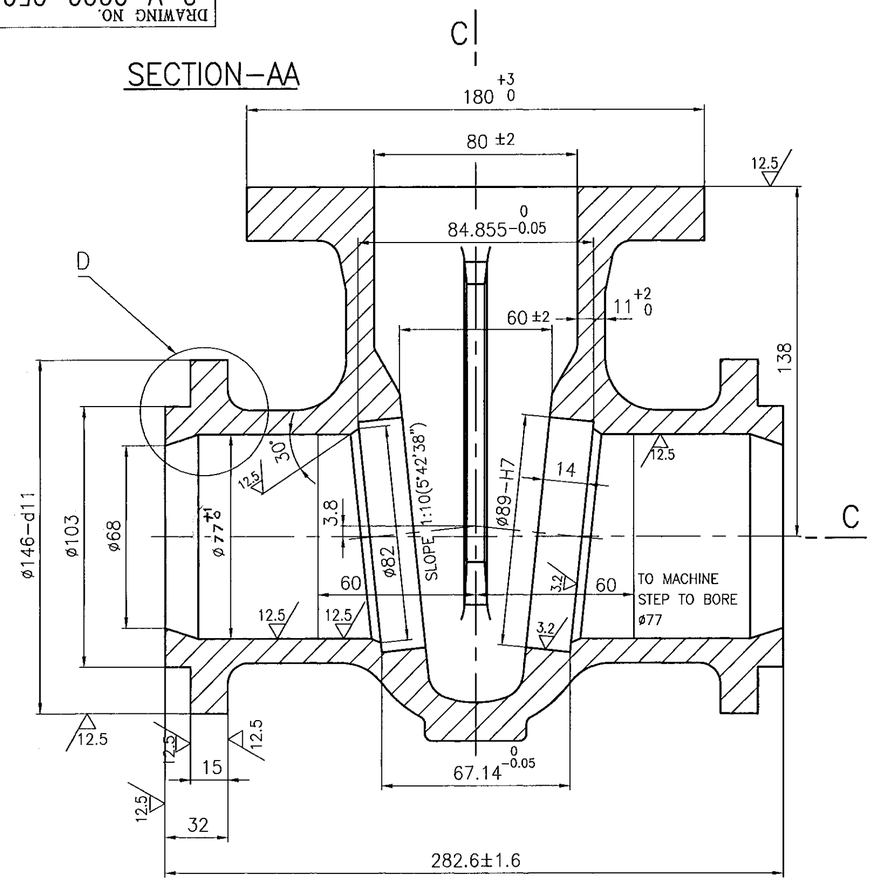

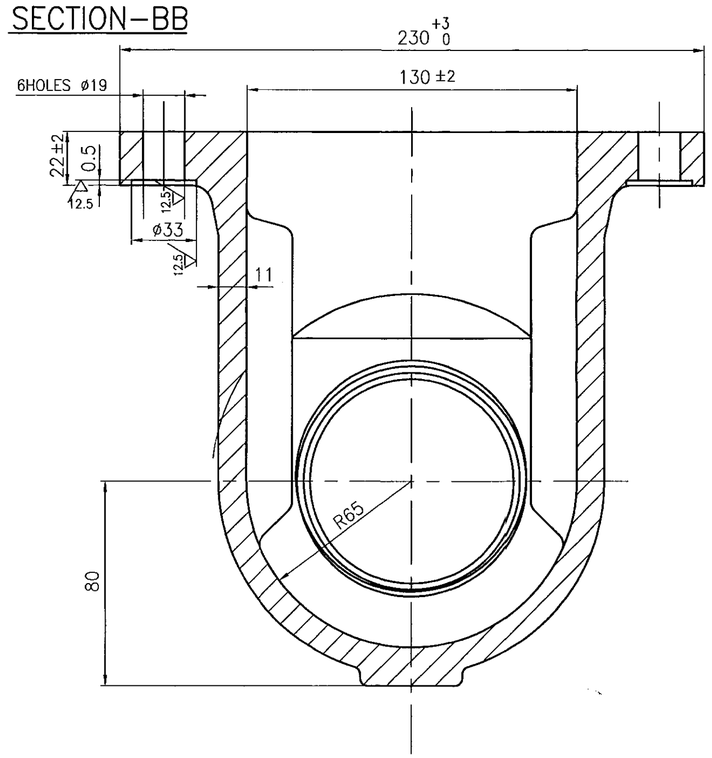

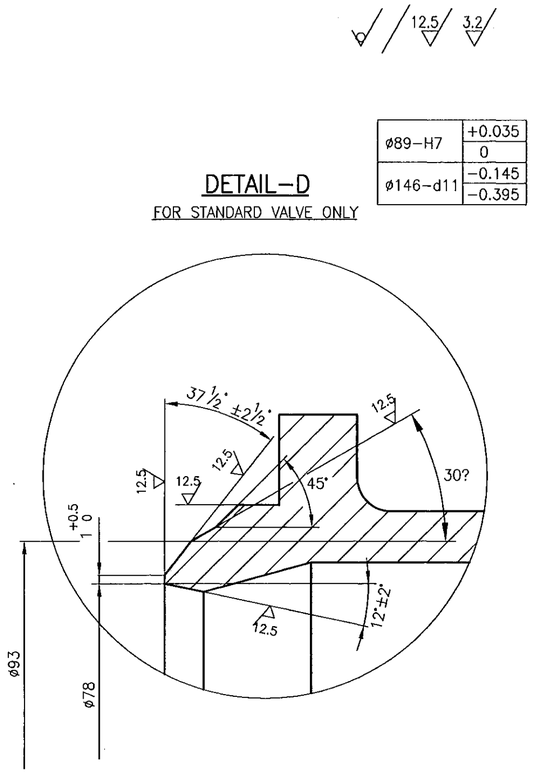

ø89–H7	+0.035 / 0
ø146–d11	−0.145 / −0.395

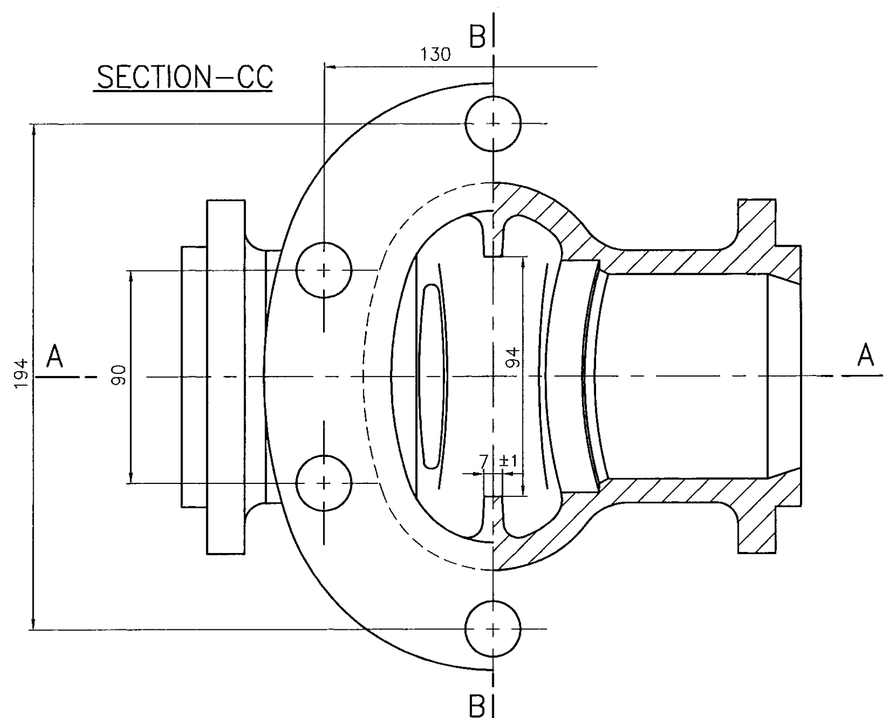

SL. NO.	DESCRIPTION	MATL CODE	MATL SPECN	HEAT TREATMENT	SCRAP SORT	NET WT (kg)	GROSS WT (kg)	DRAWING No	ITEM No
5	CASTING DRG.No. 2.V.N677.05875R	92200933	A351 CF8 (ATTEST)	S.H	4.6	14.5	18.5	2VN677.05966/ 931083130000	01
4	CASTING DRG.No. 2.V.N292.05875R	92 200 299	A217 WC9 (ATTEST)	N & T	20	14.5	18.5	2VN29205966/02 931060130000	01
3	CASTING DRG.No. 2.V.N291.05875R	92 200 298	A217 WC6 (ATTEST)	N & T	20	14.5	18.5	2VN29105966/02 931060120000	01
2	CASTING DRG.No. 2.V.N290.05875R	92 200 297	A21C WCC (ATTEST)	NORMALISED	10	14.5	18.5	2VN290.05966/02 931060110000	01
1	CASTING DRG.No. 2.V.N289.05875R	92 200 296	A216 WCB ATTEST	NORMALISED	10	14.5	18.5	2VN28905966/02 931060100000	01

TYPE OF PRODUCT OR NAME OF CUSTOMER/PROJECT: CS

DRG. RETRACED WITH REV.01 ON 01.09.97(REFER DCN.CS:0577)

BHARAT HEAVY ELECTRICALS LTD.,
UNIT: HIGH PRESSURE BOILER PLANT.
TIRUCHIRAPALLI-620014.
365-120

	NAME	SIGN	DATE	NO.OF VAR.
DRN	T.R.R.MURTHY		01.09.97	
CHD	N.DHANAPAL		01.09.97	–
APPD	A.VISWANATHAN		01.09.97	

DEPT: V L
CODE: 320
SCALE: NTS.
WEIGHT (KG): –
REFERENCE INFORMATIONS: CAD:C205966
NO. OF ITEMS: –

TITLE: BODY (3" C150 BW)
CARD CODE: U 01
DRAWING NO. 2-V-0000-05966
REV 03

REV	DATE	ALTD: N.D.P.B.L. / CKD&APPD:	REV	DATE	ALTERED / CHD & APPD
03	26.09.97		02	02.09.97	

1. SL.NO. 5 INCLUDED.

ZONE: DIMENSION IN TOP FLANGE 4HOLESxø19 REVISED TO 6HOLESxø19

REFER DCN.CS:0740

CAUTION: The information on this document is the property of BHARAT HEAVY ELECTRICALS LTD. It must not be used directly or indirectly in any way detrimental to the interest of the company.

Size A2

FIRST ANGLE PROJECTION (ALL DIMENSIONS IN MILLIMETRES)

REV 01	DATE	ALTERED / CHECKED	REV 02	DATE	ALTERED / CHECKED

CAUTION THE INFORMATION ON THIS DOCUMENT IS THE PROPERTY OF BHARAT HEAVY ELECTRICALS LTD. IT MUST NOT BE USED DIRECTLY OR INDIRECTLY IN ANY WAY DETRIMENTAL TO THE INTEREST OF THE COMPANY.

φ6 b9	-0.140
	-0.170

205 f

12.5 / 3.2

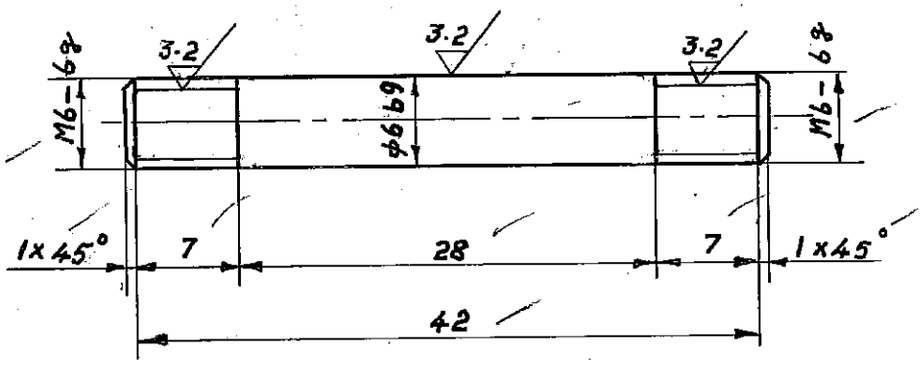

SL NO	DRAWING NUMBER	MATL. SPECN	SUGGESTED SIZE	MATL CODE.	GROSS WT KG	NET WT KG	COMP. CODE.	SCRAP SORT
1	4-V-R001-18081	A 193 - B7 CERTIFY	φ10x 52	–	0.04	0.01	93 113 237 0000	2D

Bharat Heavy Electricals Ltd.,
BOILER PLANT UNIT
TIRUCHIRAPALLI-620 014

	NAME	SIGN	DATE
DRN	R. KANNAN		
CHD	M.R.K.		
APPD	V.B		14/5/82

DEPT.	GRADE OF UNTOL. DIM	SCALE	WEIGHT (kg)	TDA DRG. NO	ITEM NO.
VL	¢/M/f	NTS		4-E 61973 (1382)	
CODE 320.					

TITLE	CARD CODE	DRAWING NO.	REV
BOLT	U 01	4-V-R001-18081	0

Size A4

CORPORATE DRG ID TP-DG-4-V-R001-18081

CORPORATE DRG ID TP-DG-4-V-R001-18081

C/642-90

ALL DIMENSIONS ARE IN MILLIMETRES. FOR TOLERANCES OF UNTOLERANCED DIMENSIONS DURING MANUFACTURE REFER RELEVANT QCP / QP.

DRAWING NO. 3-V-0000-20426

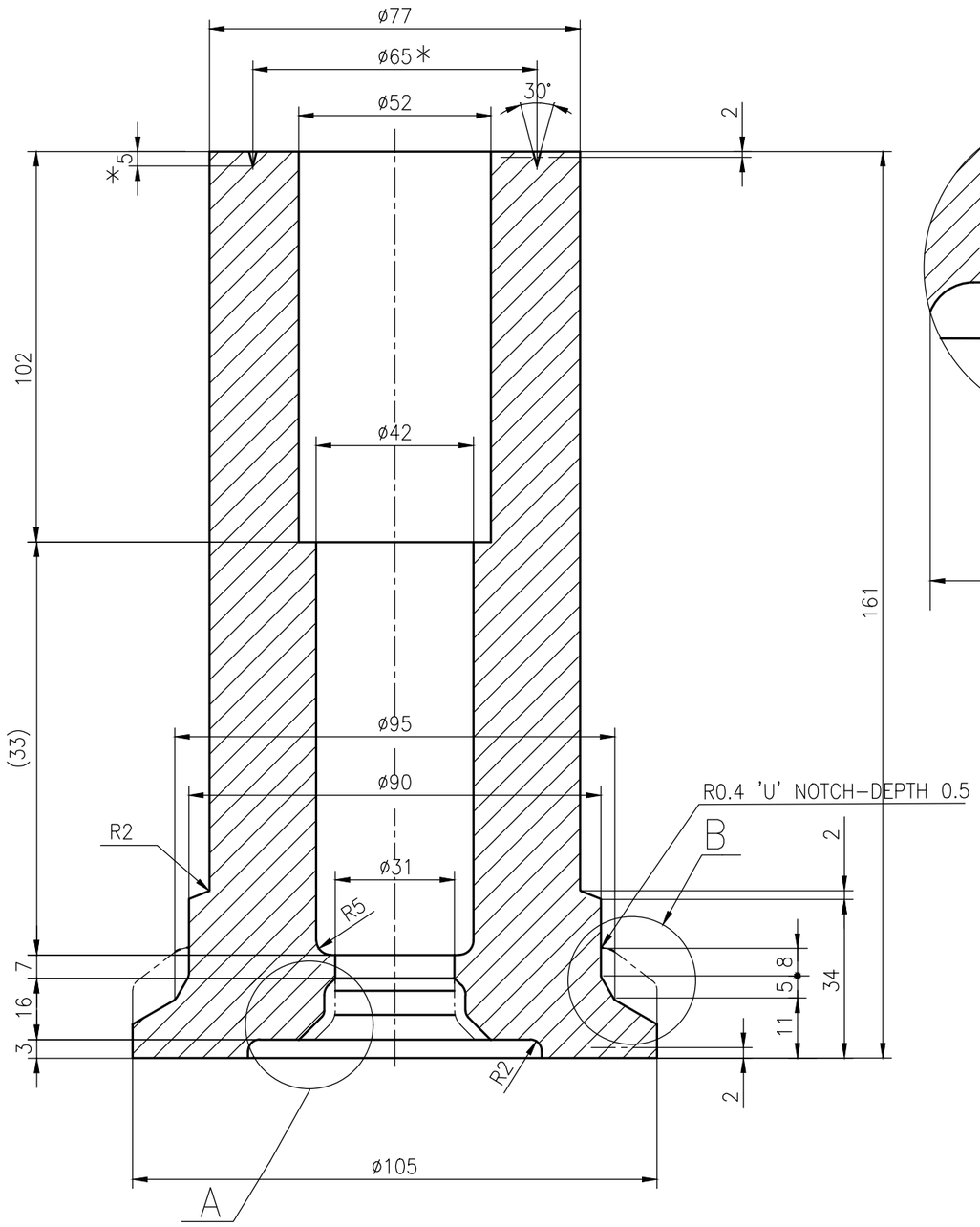

DETAIL A

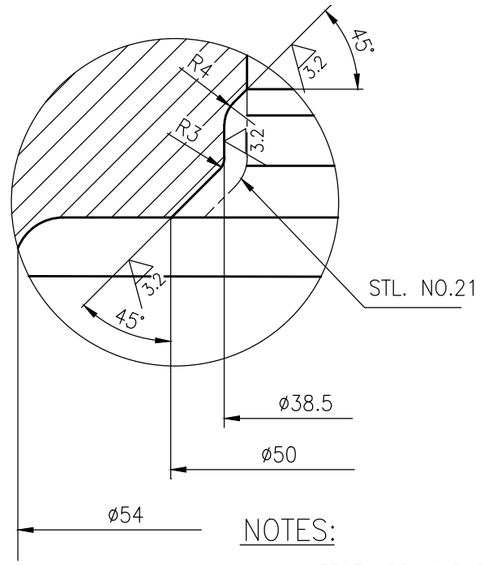

DETAIL B

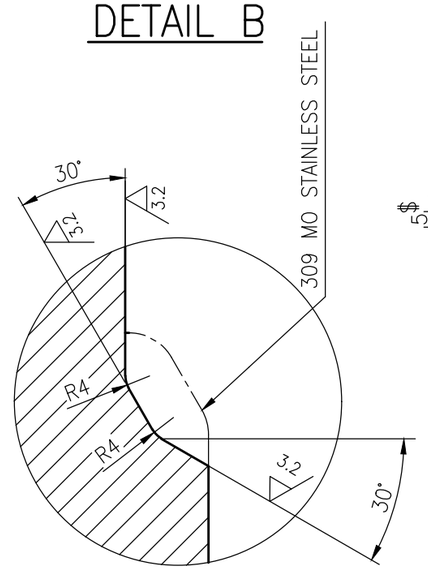

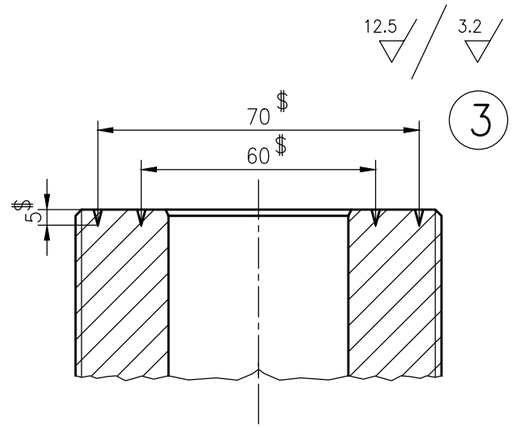

NOTES:

1. LATEST APPLICABLE QUALITY WORK INSTRUCTIONS SHALL BE FOLLOWED IN ALL RESPECTS.
2. * MARKED IS FOR SA182 F22 CL.3 MATL. ONLY FOR IDENTIFICATION.
3. $ IDENTIFICATION GROOVES FOR SA182 F91 MATERIAL.

SL. NO.	DRAWING NO.	COMP. CODE	MATL. SPECN.	MATL. SIZE	MATL. CODE	GROSS WT.(Kg)	SCRAP SORT
03	3-V-G393-20426	931255738000	SA182 F91.NT PRODUCT ATTEST	ø110x170	--	12.69	20
02.	3-V-G068-20426/1	931133548000	SA182 F22 CL3 NT.PRO. ATTEST	ø110x170	--	12.69	20
01.	3-V-G065-20426/1	931133538000	SA105, NR PRODUCT ATTEST	ø110x170	--	12.69	10

NO OFF	DESCRIPTION	MATL CODE	MATL SPECN	HEAT TREATMENT	SCRAP SORT	NET WT (kg)	GROSS WT (kg)	DRAWING No	ITEM No

REDRAWN WITH REV.2 ON 07.09.16

REV	DATE	ALTERED R.ANITHA
2	07.09.16	CHD & APPD SSK&KRS

SL. NO. 03 INCLUDED

CAUTION: The information on this document is the property of BHARAT HEAVY ELECTRICALS LTD. It must not be used directly or indirectly in any way detrimental to the interest of the company.

TYPE OF PRODUCT
OR NAME OF
CUSTOMER/PROJECT

BHARAT HEAVY ELECTRICALS LTD.,
UNIT: HIGH PRESSURE BOILER PLANT.
TIRUCHIRAPALLI-620014.
365-121

	NAME	SIGN	DATE	NO.OF VAR.
DRN	R.ANITHA		07.09.16	
CHD	S.SATHEESKUMAR		07.09.16	
APPD	K.RAJASEKARAN		07.09.16	

DEPT	CODE	SCALE	WEIGHT (KG).	REFERENCE INFORMATIONS	NO. OF ITEMS
VL	320	N T S	12.69		

TITLE	CARD CODE	DRAWING NO.	REV
BONNET (ROUGH MACHINING) 80/1500 CLASS	U 01	3-V-0000-20426	2

Size A3

ALL DIMENSIONS ARE IN MILLIMETRES. FOR TOLERANCES OF UNTOLERANCED DIMENSIONS DURING MANUFACTURE REFER RELEVANT QCP / QP.

DRAWING NO. 3-20-201-00147

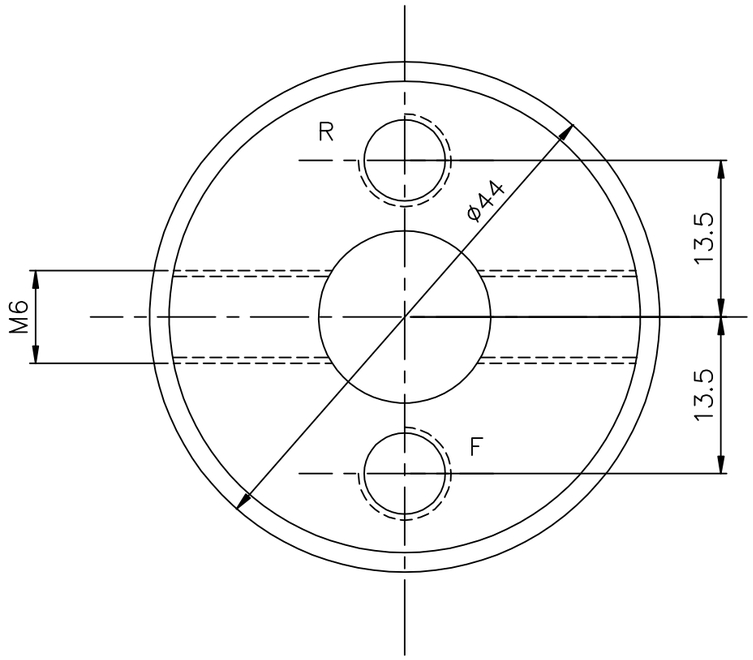

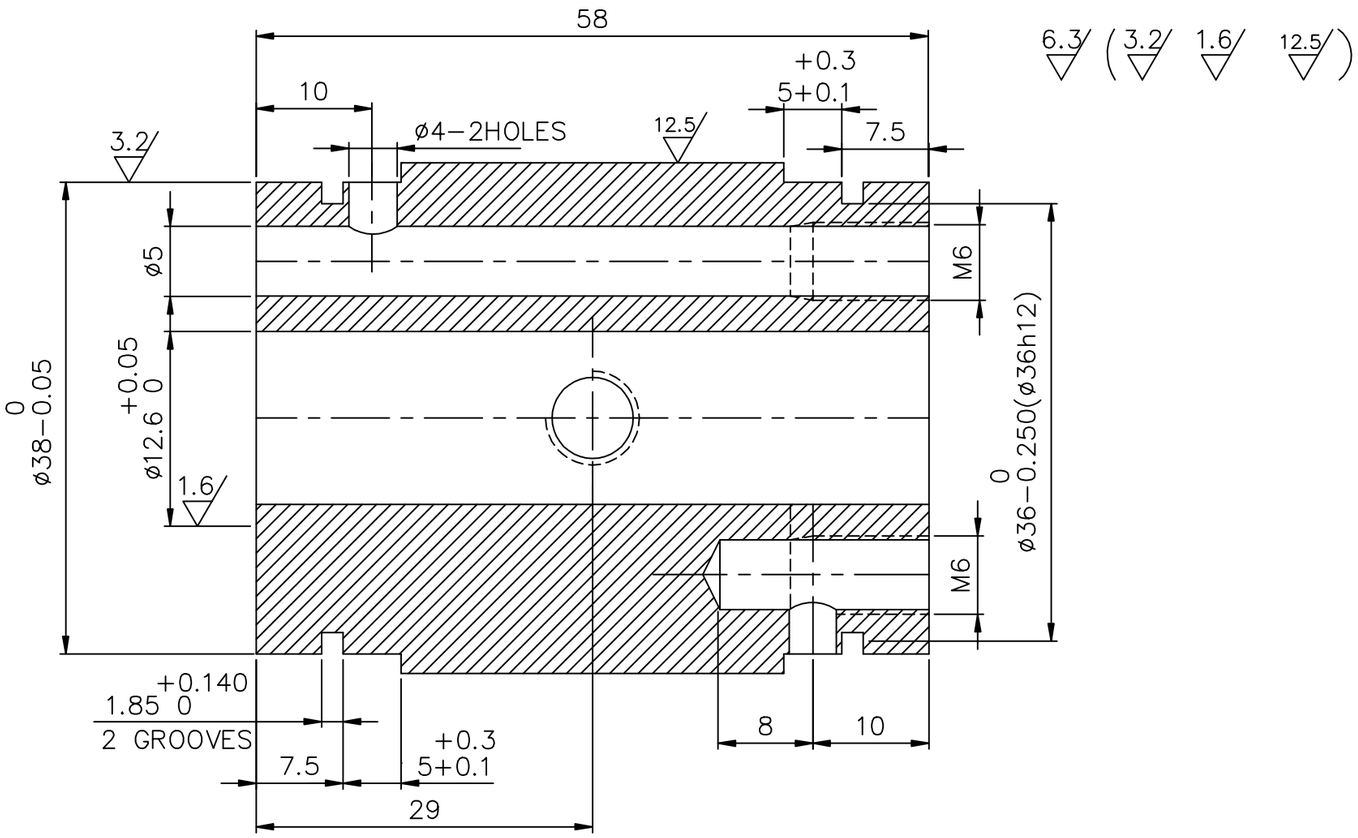

NOTES: –

1. STAMP 'R' & 'F' ON THIS SURFACE AS SHOWN
2. TO BE HARDENED TO HRC 28.
3. FOR QUALITY REQUIREMENTS REFER LATEST APPLICABLE QUALITY PROCEDURE.

PART CODE : 842020117400

NO OFF	DESCRIPTION	MATL CODE	MATL SPECN	HEAT TREATMENT	SCRAP SORT	NET WT (kg)	GROSS WT (kg)	DRAWING No	ITEM No
01	ROUND ø50	153242600000	SA182F6ACL3			0.925			

TYPE OF PRODUCT
OR NAME OF
CUSTOMER/PROJECT

BHARAT HEAVY ELECTRICALS LTD.,
UNIT: HIGH PRESSURE BOILER PLANT.
TIRUCHIRAPALLI-620014.
365-126

	NAME	SIGN	DATE	NO.OF VAR.
DRN	J.SANKAR	J.S.	20.11.2011	
CHD	S K GUPTA	SKG	20.11.2011	
APPD	K.SRIDHARAN	K.S.	20.11.2011	

DEPT	SCALE	WEIGHT (KG).	REFERENCE INFORMATIONS	NO. OF ITEMS
SB	NTS	0.65		
CODE 330				

TITLE	CARD CODE	DRAWING NO.	REV
CAM SHAFT COLLAR	U 01	3-20-201-00147	11

REV	DATE	ALTERED	J.S.
11	21.11.11	CHD & APPD	SKG & K.S.

PART CODE 842020117400
WAS 842020117300.
BOM UPDATED.

DCN: SB: 801133/5012916

CAUTION: The information on this document is the property of BHARAT HEAVY ELECTRICALS LTD. It must not be used directly or indirectly in any way detrimental to the interest of the company.

Size A3

ALL DIMENSIONS ARE IN MILLIMETRES.
FOR TOLERANCES OF UNTOLERANCED DIMENSIONS DURING MANUFACTURE REFER RELEVANT QCP/QP

REV	DATE	ALTERED VB
2	12.04.08	CHD & APPD KRS&MRK

DRAWING CONVERTED INTO SOFT COPY

DCP. No.800813

CAUTION: The information on this document is the property of BHARAT HEAVY ELECTRICALS LTD. It must not be used directly or indirectly in any way detrimental to the interest of the company.

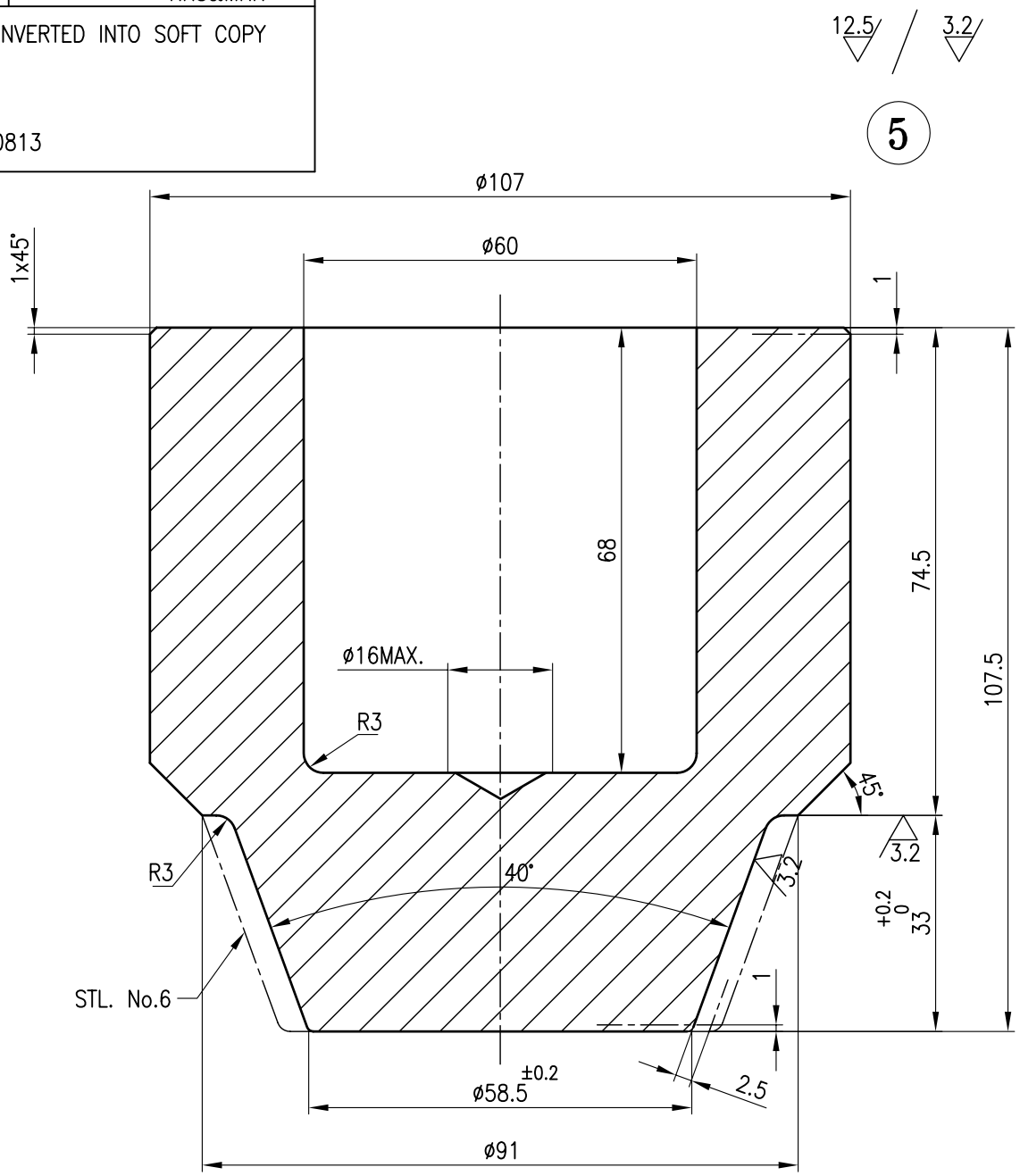

NOTE: 1. LATEST APPLICABLE QUALITY WORK INSTRUCTIONS SHALL BE FOLLOWED IN ALL RESPECTS.

REDRAWN WITH REV.2 ON 12.04.08 COMP. CODE:93 111 858 8000

NO OFF	DESCRIPTION	MATL CODE	MATL SPECN	HEAT TREATMENT	SCRAP SORT	NET WT (kg)	GROSS WT (kg)	DRAWING No	ITEM No
1.	ø110 X 118		A182 F22 CL.3, PRODUCT ATTEST	NT	20	–	8.8		

BHARAT HEAVY ELECTRICALS LTD.,
UNIT: HIGH PRESSURE BOILER PLANT.
TIRUCHIRAPALLI 620014.
365-122

	NAME	SIGN	DATE	NO.OF VAR
DRN	V.BAIRAVAN		12.04.08	
CHD	K.RAJASEKARAN		12.04.08	
APPD	M.RAJAKUMAR		12.04.08	

DEPT	SCALE	WEIGHT (KG).	REFERENCE INFORMATIONS	NO. OF ITEMS
VL	N.T.S		TDA DRAWING No. 4-E-56182 [0320]	
CODE 320				

TITLE	CARD CODE	DRAWING NO.	REV
DISC [FOR STL. WELDING] [ROUGH MACHINING DRAWING] 100/2500C	U 01	4-V-G003-18010	2

Size A4

ALL DIMENSIONS ARE IN MILLIMETRES. FOR TOLERANCES OF UNTOLERANCED DIMENSIONS DURING MANUFACTURE REFER RELEVANT QCP / QP.

DRAWING NO. 3-20-201-02123

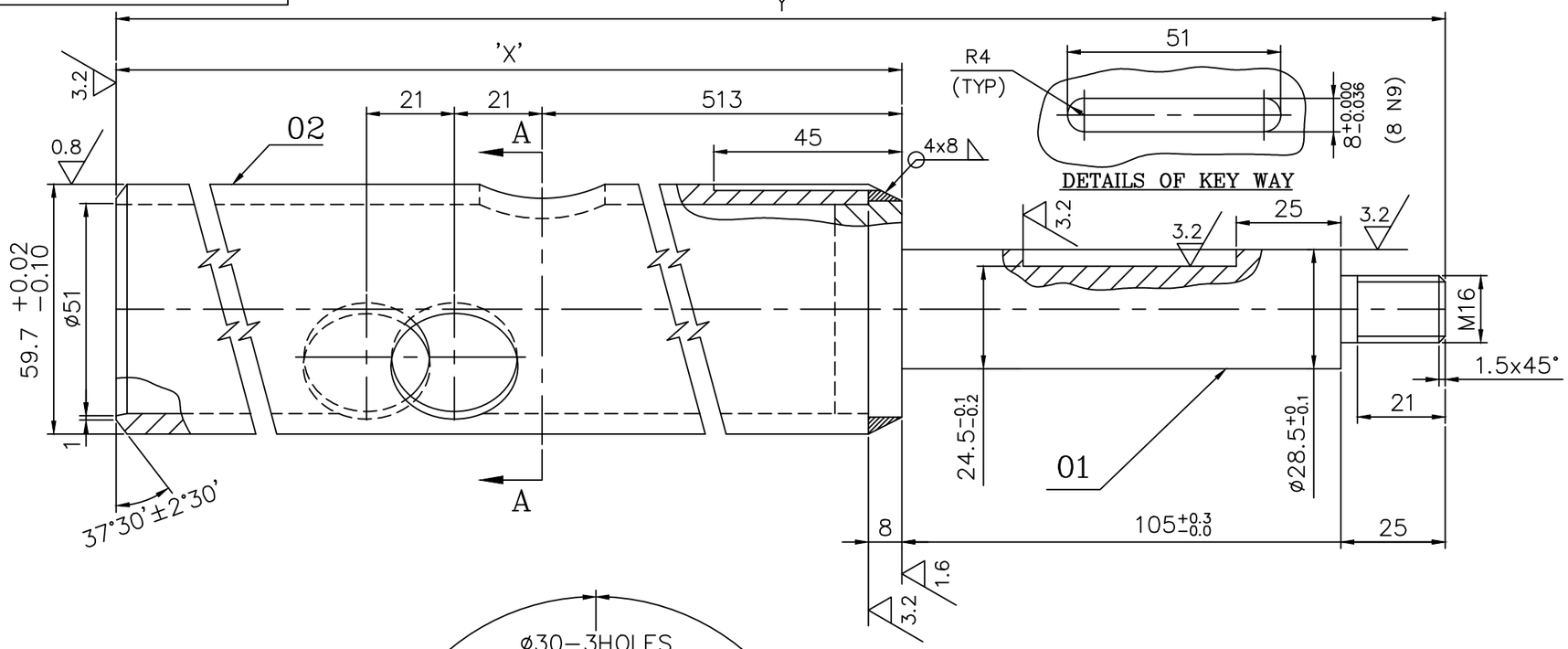

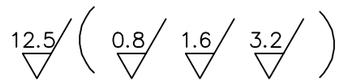

'P'

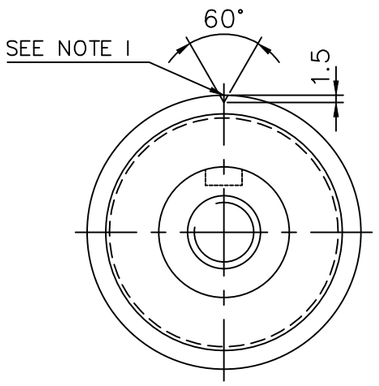

VIEW 'P'

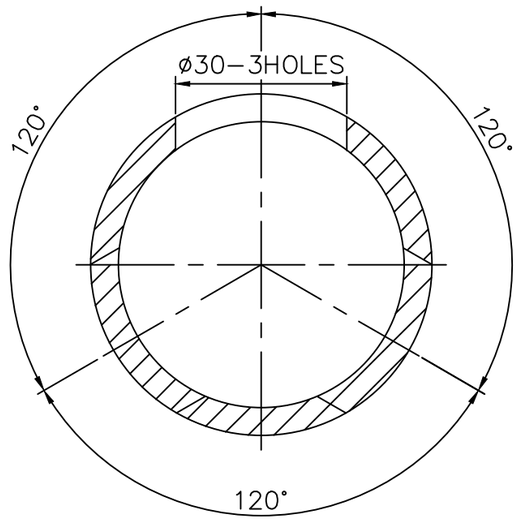

SECTION−'AA'

NOTES:−

01. 'V' GROVE TO BE IN LINE WITH CENTER LINE OF KEY WAY.

02. ALL MACHINING SHOULD BE DONE AFTER WELDING OF ITEM 01 AND 02.

03. FOR QUALITY REQUIREMENTS REFER LATEST APPLICABLE QUALITY PROCEDURES.

VARIANT Nos.	PART CODE	DIMENSION 'X'	DIMENSION 'Y'	WEIGHT(Kg)
1	842020135505	2088	2218	13.45
2	842020135506	1388	1518	10.11
3	842020135507	1575	1705	11.42

REV	DATE	ALTERED	J.S
01	03.06.19	CHD&APPD	J.S & G.S

ZONE: VARIANT Nos. INTRODUCED.

DCN : SB : 802487/5025554

CAUTION: The information on this document is the property of BHARAT HEAVY ELECTRICALS LTD. It must not be used directly or indirectly in any way detrimental to the interest of the company.

NO OFF	DESCRIPTION	MATL CODE	MATL SPECN	HEAT TREATMENT	SCRAP SORT	NET WT (kg)	GROSS WT (kg)	DRAWING No	ITEM No

TYPE OF PRODUCT
OR NAME OF
CUSTOMER/PROJECT

BHARAT HEAVY ELECTRICALS LTD.,
UNIT: HIGH PRESSURE BOILER PLANT.
TIRUCHIRAPALLI-620014.
365-121

	NAME	SIGN	DATE	NO.OF VAR.
DRN	J.SANKAR	J.S	23.01.18	
CHD	J.SANKAR	J.S	23.01.18	
APPD	GURPREET SINGH	G.S	23.01.18	

DEPT: SB
CODE: 330
SCALE: NTS
WEIGHT (KG): −
REFERENCE INFORMATIONS: M−63618, 3−20−201−00139, 3−20−201−00699, 3−20−201−02086
NO. OF ITEMS

TITLE: SEMI−FINISHED EXTENDED SWIVEL TUBE
CARD CODE: U 01
DRAWING NO. 3−20−201−02123
REV 01

Size A3

ALL DIMENSIONS ARE IN MILLIMETRES. FOR TOLERANCES OF UNTOLERANCED DIMENSIONS DURING MANUFACTURE REFER RELEVANT QCP / QP.

DRAWING NO. 3-V-0000-09859/6

SL. No.	DRAWING No.	COMP. CODE	RAW MATERIAL SIZE	RAW MATERIAL MATL.SPECN.	RAW MATERIAL CODE	RAW MATERIAL GROSS WT(KG)	DIMENSIONS L	DIMENSIONS L1	DIMENSIONS ød	DIMENSIONS Md	NET WT(Kg.)	VALVE TYPE
01	3-V-K011-09859/01	93 101 811 0000	820xø16	IS 2062 Fe-410WB, NR, CERTIFY	15 004 106	1.29	810	25	16	12	1.27	10"/C150
02	3-V-K163-09859/01	93 102 553 0000	720xø16		15 004 106	1.14	710	25	16	12	1.12	8"/300
03	3-V-K268-09859/01	93 102 987 0000	420xø16		15 004 106	0.66	410	25	16	12	0.64	65/40 GV
04	3-V-K319-09859/01	93 103 427 0000	485xø16		15 004 106	0.765	475	25	16	12	0.74	4"-C150 & 3"-C300
05	3-V-K324-09859	93 103 461 0000	380xø16		15 004 106	0.60	370	25	16	12	0.58	2"/C800
06	3-V-U109-09859	93 110 296 0000	863xø16		15 004 106	1.35	853	25	16	12	1.30	12"-C300
07	3-V-C757-09859	93 130 322 0000	620xø16		15 004 106	0.98	600	25	16	12	0.91	10"-1500 C

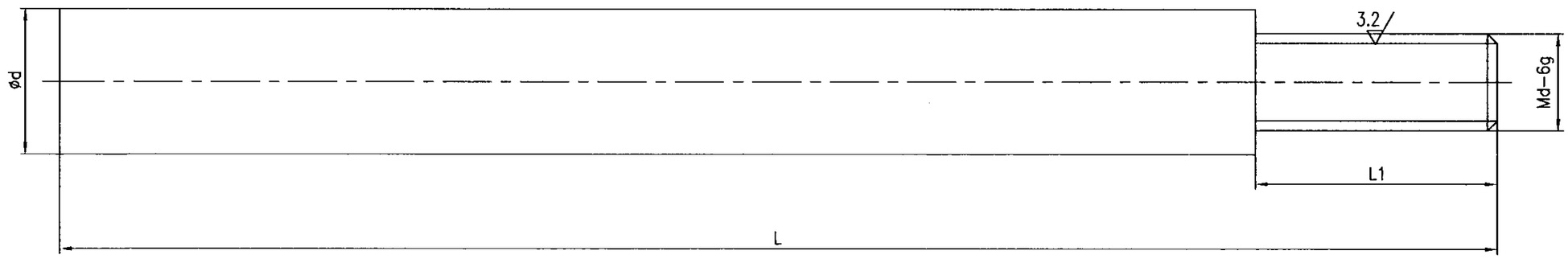

NO OFF	DESCRIPTION	MATL CODE	MATL SPECN	HEAT TREATMENT	SCRAP SORT	NET WT (kg)	GROSS WT (kg)	DRAWING No	ITEM No

TYPE OF PRODUCT
OR NAME OF
CUSTOMER/PROJECT

DRG. REDRAWN WITH REV.6 ON 9.08.04

BHARAT HEAVY ELECTRICALS LTD.
UNIT: HIGH PRESSURE BOILER PLANT.
TIRUCHIRAPALLI 620014.
365-121

	NAME	SIGN	DATE	NO.OF VAR.
DRN	V.BAIRAVAN		9.08.04	
CHD	R.L.N		9.08.04	
APPD	M.RAJKUMAR		9.08.04	

DEPT VL
CODE
SCALE NTS
WEIGHT (KG).
REFERENCE INFORMATIONS
CAD REFER:C309859
NO. OF ITEMS

TITLE: FIXING CLAMP
CARD CODE: U 01
DRAWING NO. 3-V-0000-09859
REV 6

REV	DATE	ALTERED V.B
6	9.08.04	CHD & APPD M.R.K

SL No.07 INCLUDED

CAUTION: The information on this document is the property of BHARAT HEAVY ELECTRICALS LTD. It must not be used directly or indirectly in any way detrimental to the interest of the company.

Size A3

ALL DIMENSIONS ARE IN MILLIMETRES. FOR TOLERANCES OF UNTOLERANCED DIMENSIONS DURING MANUFACTURE REFER RELEVANT QCP / QP.

DRAWING NO. 3-V-K011-09861/01

12.5

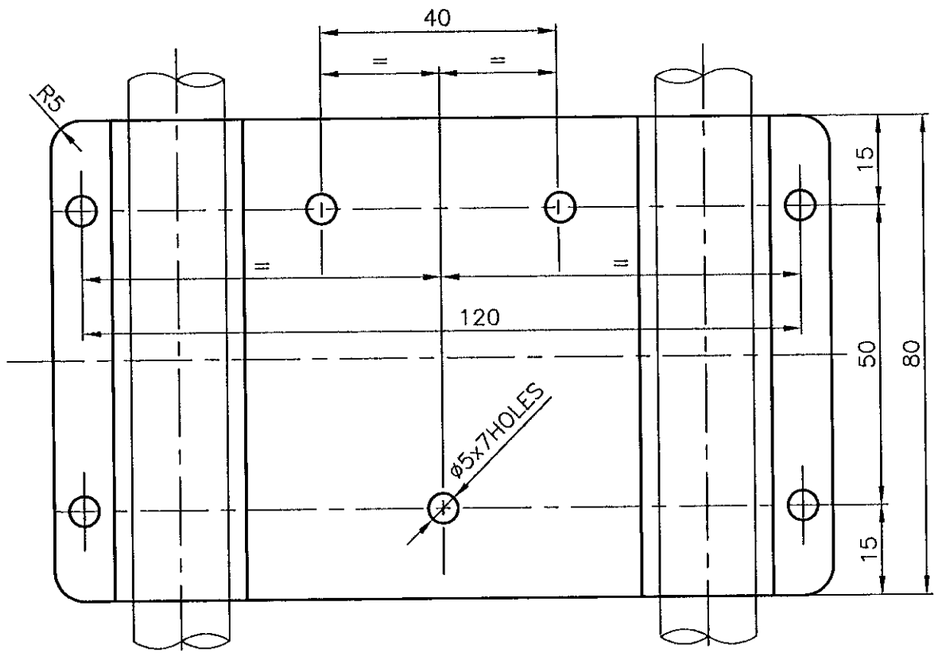

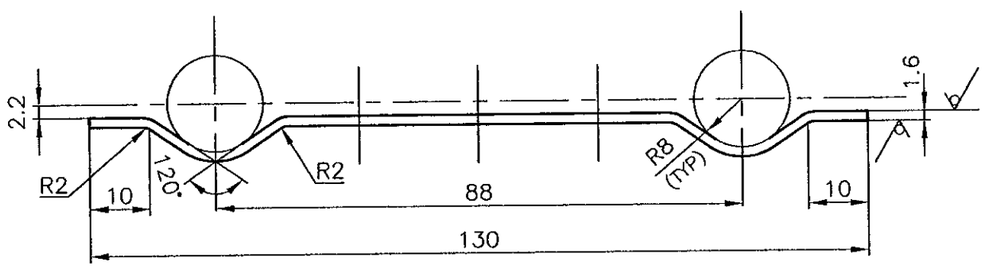

NO OFF	DESCRIPTION	MATL CODE	MATL SPECN	HEAT TREATMENT	SCRAP SORT	NET WT (kg)	GROSS WT (kg)	DRAWING No	ITEM No
04	150x85 SH 1.6	15 011 076	IS 2062 Fe410WB CERTIFY	NORMALISED	10	0.13	0.15		424

TYPE OF PRODUCT OR NAME OF CUSTOMER/PROJECT: CS

DRG. RETRACED WITH REV.01 ON 11.06.2001 (REF. DCN:CS:0647)

BHARAT HEAVY ELECTRICALS LTD.
UNIT: HIGH PRESSURE BOILER PLANT.
TIRUCHIRAPALLI 620014.
365-121

	NAME	SIGN	DATE	NO.OF VAR.
DRN	K.P.LEON		11.06.01	
CHD	P.BOOMINATHAN		11.06.01	
APPD	K.S.RAMAN		11.06.01	

DEPT	SCALE	WEIGHT (KG).	REFERENCE INFORMATIONS	NO. OF ITEMS
VL	1:1	REFER TABLE	COMP. CODE: 931018130000 CAD:C309861	
CODE				

TITLE	CARD CODE	DRAWING NO.	REV
FIXING PLATE	U 01	3-V-K011-09861	01

REV	DATE	ALTERED K.P.Leon
01	11.06.01	CHD & APPD

NOTES UPDATED

REFER DCN NO. CS:0647

CAUTION: The information on this document is the property of BHARAT HEAVY ELECTRICALS LTD. It must not be used directly or indirectly in any way detrimental to the interest of the company.

Size A3

ALL DIMENSIONS ARE IN MILLIMETRES. FOR TOLERANCES OF UNTOLERANCED DIMENSIONS DURING MANUFACTURE REFER RELEVANT QCP / QP.

DRAWING NO. 3-20-201-00699

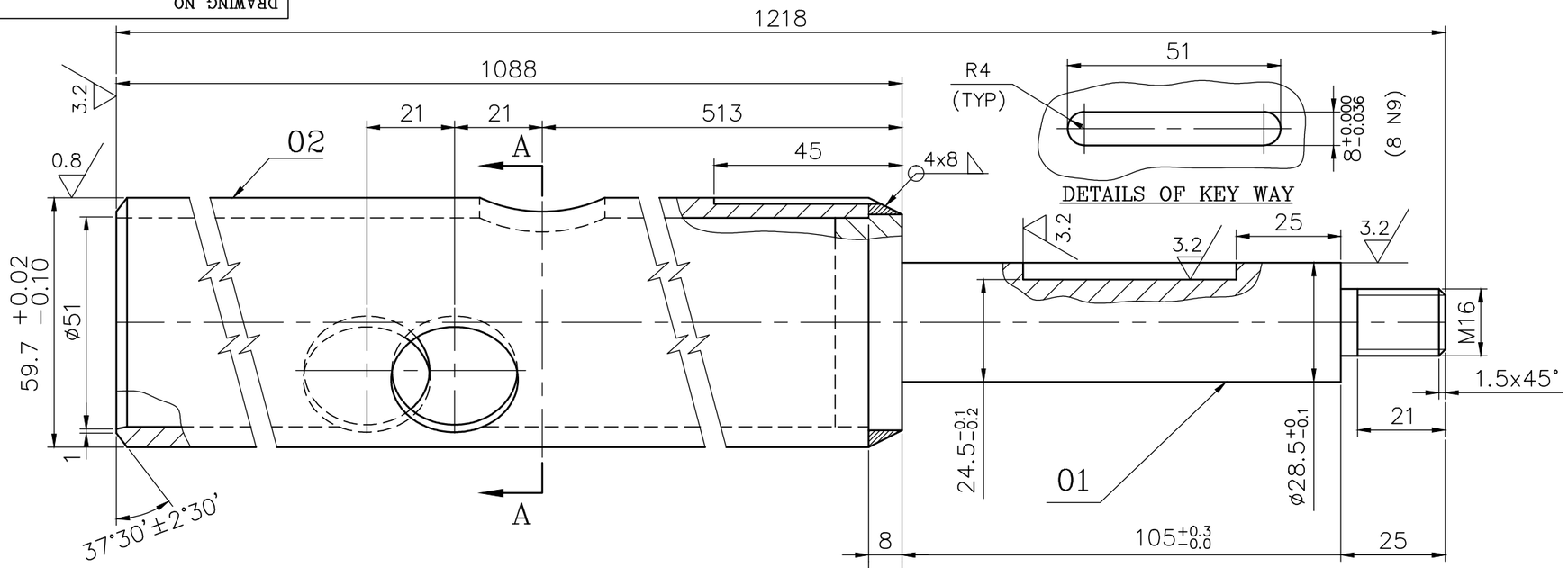

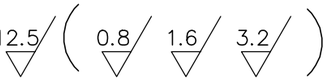

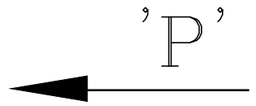

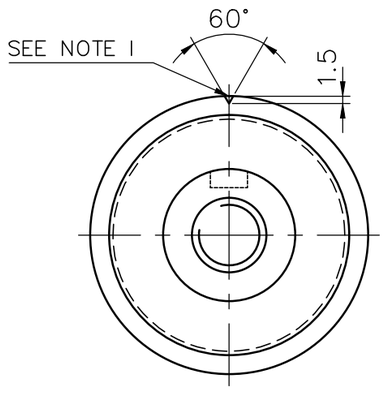

VIEW 'P'

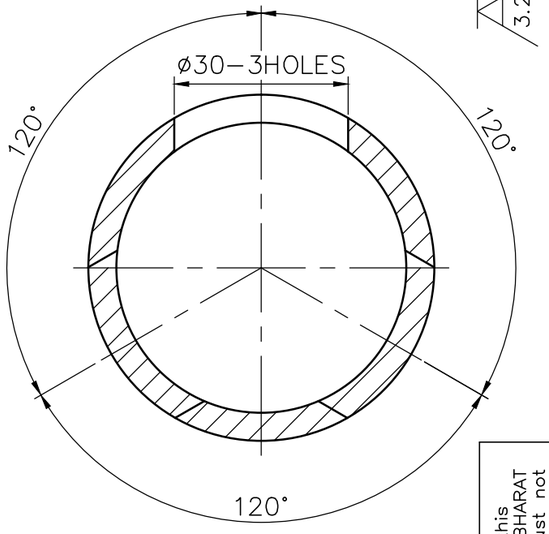

SECTION−'AA'

NOTES:−

01. 'V' GROVE TO BE IN LINE WITH CENTER LINE OF KEY WAY.

02. ALL MACHINING SHOULD BE DONE AFTER WELDING OF ITEM 01 AND 02.

03. FOR QUALITY REQUIREMENTS REFER LATEST APPLICABLE QUALITY PROCEDURES.

PART CODE : 842020135500

NO OF	DESCRIPTION	MATL CODE	MATL SPECN	HEAT TREATMENT	SCRAP SORT	NET WT (kg)	GROSS WT (kg)	DRAWING No	ITEM No

TYPE OF PRODUCT
OR NAME OF
CUSTOMER/PROJECT

BHARAT HEAVY ELECTRICALS LTD.,
UNIT: HIGH PRESSURE BOILER PLANT.
TIRUCHIRAPALLI-620014.
365-121

	NAME	SIGN	DATE	NO.OF VAR.
DRN	V.ARUMUGAM	V.A	11.06.01	
CHD	K.SRIDHARAN	K.S	11.06.01	
APPD	S.NATARAJAN	S.N	11.06.01	

DEPT	SCALE	WEIGHT (KG).	REFERENCE INFORMATIONS	NO. OF ITEMS
SB	NTS	8.580	M−63618	
CODE 330			3−20−201−00139	

TITLE	CARD CODE	DRAWING NO.	REV
SEMI−FINISHED SWIVEL TUBE	U 01	3−20−201−00699	04

REV	DATE	ALTERED	J.S
04	24.08.12	CHD & APPD	K.S

KEY WAY REFERENCE PROVIDED & DRAWING UPDATED.

DCN:SB: 801294 / 5014784

CAUTION: The information on this document is the property of BHARAT HEAVY ELECTRICALS LTD. It must not be used directly or indirectly in any way detrimental to the interest of the company.

Size A3

FOR TOLERANCES OF TOLERANCED DIMENSIONS DURING MANUFACTURE REFER RELEVANT QCP/QP

SL. NO.	DRG. NO.	RAW MATERIAL SPECN.	SIZE	CODE	WT. (kg)	DIMENSIONS L	L1	L2	L3	L4	φD1	φd				FINISHED WT. (kg)	APPLICABLE TYPE NO.	COMPONANTE CODE NO.
1	3-V-S854-09456	SA 210 Gr. A1	φ 63.5 x 5.2 - 183	15086123	1.36	178	15	7	17	141	56.5	6.6				1.38	S 854	
2	3-V-S855-09456	"	φ 44.5 x 5 - 88	15086071	0.46	83	10	4.5	22	46	36.5	4.6				0.40	S 855	
3	3-V-S856-09456	"	"	"	"	83	10	4.5	18	50	36.5	4.6				0.40	S 856	
4	3-V-S857-09456	"	φ 44.5 x 5 - 94	"	0.49	89	10	4.5	22	52	36.5	4.6				0.43	S 857	
5	3-V-S858-09456	"	φ 51 x 5 - 111	15086095	0.71	106	11	5	23	68	42.5	4.6				0.60	S 858	
6	3-V-S859-09456	"	"	"	0.71	105	11	5	15	75	42.5	4.6				0.59	S 859	
@ 7	3-V-S860-09456/1	SA 192	φ 76.1 x 5.6 - 220 - ~~188~~	15084130	1.86	~~189~~ 216	15	7	~~44~~ 40	~~119~~ 140	70.5	6.6				1.77	S 860	
8	3-V-S861-09456/1	"	φ 76.1 x 5.6 220 - ~~288~~	"	2.83	~~283~~ 216	15	7	33	~~230~~ 140	70.5	6.6				2.74	S 861, S862	93103632
@ 9	3-V-S863-09456/1	SA 106 Gr B	φ 88.9 x 6.3 - 265 - ~~237~~	15082140	3.16	~~232~~ 261	15	7	38	~~174~~ 195	80.5	6.6				2.99	S 863	93103638
@ 10	3-V-S864-09456/1	"	φ 108 x 4.5 - 290 - ~~260~~	15082162	3.01	~~255~~ 286	15	7	39	~~196~~ 220	100.5	6.6				2.65	S 864	
11	3-V-S865-09456	"	φ 108 x 4.5 - 288	"	3.32	283	15	7	39	224	100.5	6.6				2.94	S 865, S 866	
@ 12	3-V-S867-09456/1	SA 192	φ 76.1 x 5.6 - 175 - ~~144~~	15084130	1.43	~~139~~ 171	15	7	39	~~88~~ 100	70.5	6.6				1.44	S867, S868	
@ 13	3-V-S869-09456	"	φ 76.1 x 5.6 - 140 ~~119~~	"	1.20	~~114~~ 134	15	7	20	~~74~~ 94	70.5	6.6				1.18	S869, S882	
@ 14	3-V-S884-09456/1	SA 106 Gr. B	φ 88.9 x 6.3 - 190	15082140	2.06	~~152~~ 184	15	7	30	~~102~~ 130	80.5	6.6				1.58	S 884	
@ 15	3-V-S887-09456	"	φ 88.9 x 6.3 - 300	"	4.19	296	21	7	30	220	80.5	6.6				3.59	S 887	93104964
@ 16	3-V-S888-09456	"	φ 108 x 4.5 - 330			326	22	7	40	250	100.5	6.6					S 888	
17	3-V-A240-09456	SA 210 Gr A1	φ 63.5 x 5.2 - 100	15086123	0.84	96	12	6	15	66	54.5	6.6				0.80	A 240	93103643
18	3-V-1808-09456	SA 106 GR B	φ 88.9 x 6.3 - 365	15082140	4.57	360	15	7	29	311	80.5	6.6				3.9	1808	93104942
19	3-V-F504-09456	SA 106 Gr. B	φ 108 x 4.5 - 305	15 082 162	3.50	300	20	10.5	36	200	100.5	6.6				3.44	F504, F604	93 109 232

MICROFILMED ON 20.1.94
ROLL 00533 FILM 3187

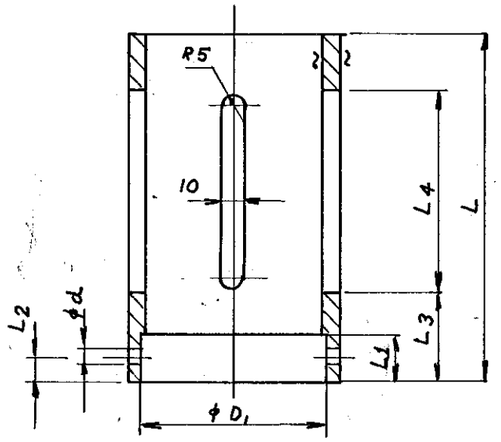

12,5

SA 210 Gr A1; SA 192 SA 106 Gr. B.	NR	10	CERTIFY
MATL. SPECN.	HEAT TREATMENT	SCRAP SORT	TYPE OF CERTIFICATION

BHARAT HEAVY ELECTRICALS LTD.,
BOILER PLANT UNIT, TIRUCHIRAPALLI-14

REV	DATE	ALTERED / CHD & APPD
04	30.12.98	ALTERED: M.U.C. / CHD & APPD:
		SL. NO. 19 INCLUDED.
03	18.3.94	ALTD: N.D.P.B.L. M.R.M. / CHKD:
		1. SL.NO.18 INCLUDED
02	DATE 22.5.79	ALTERED / CHD:
		SL. No. 17 included
01	DATE 11.1.79	ALTERED P. Rathinakumar / CHECKED
	ZONE @	SL. No 15 & 16 INCLUDED IN. SL. No. 7, 8, 9; 10; 12, 14; 13 DIMENSIONS L; L3 & L4 ALTERED. L3 only for item 7

FIRST ANGLE | SCALE | DRAWN: MD / RC | CHECKED | APPROVED: S Venkataramana | DATE: 17.9.77 | TOTAL wt. (kg.) | TYPE | NEW/OLD DRG. No.

ALL DIMENSIONS IN MILLIMETRES

CAUTION
THE INFORMATION CONTAINED IN THIS DRAWING IS THE PROPERTY OF BHARAT HEAVY ELECTRICALS LIMITED., BOILER PLANT UNIT, TIRUCHY-620 014. AND SHALL NOT BE USED WITHOUT THEIR EXPRESS WRITTEN PERMISSION IN ANY FORM OR PART THEREOF FOR ANY OTHER PURPOSE THAN FOR WHICH IT IS SENT TO YOU.

TITLE: TUBE

DRAWING No. 3-V-S000-09456

REVISION 04

SCANNED

FOR TOLERANCES OF UNTOLERANCED DIMENSIONS DURING MANUFACTURE REFER RELEVANT QCP/QP

SL.No	DRG.NO.	RAW MATERIAL: SPECIFICATION	SIZE	CODE NO.	WT.	DIMENSIONS: L	L_1	L_2	L_3	L_4	ϕD_1	ϕd	FINISH WT.	APPLICABLE TYPE NO.	COMP. CODE
@ 1	~~3-V-S833-09406/1~~	~~SA210 Gr A1~~	~~ϕ63.5x5.2 -156~~ 188	15086123	1.25	~~153~~ 183	15	7	~~39~~ 34	~~91~~ 104	56,5	6,6	1.21	~~S833 - 50/16/111~~	—
2	3-V-S834-09406/01	SA210 Gr A1 C	ϕ63.5x5.2 -189	"	1.49	184	15	7	36	128	56,5	6,6	1.45	S834	931066720000
@ 3	3-V-S835-09406/2	SA210 Gr A1 C	ϕ63.5x5.2 -238 ~~-208~~	"	1.63	~~203~~ 233	15	7	~~39~~ 34	~~144~~ 154	56,5	6,6	1.59	S835 - 100/16/111	931031240000
@ 4	~~3-V-S836-09406/1~~	~~SA106 Gr B~~	~~ϕ88.9x6.3 -285 -250~~	~~15082140~~	~~3.27~~	~~245~~ 279	21	10	~~29~~	~~188~~ 210	80,5	6,6	3.21	~~S836 - 150/16/111~~	
@ 5	3-V-S837-09406/1	SA106 Gr B	ϕ108x4.5 -356 ~~-321~~	15082162	3.71	~~316~~ 351	22	10,5	36	~~260~~ 275	100,5	6,6	3.64	S837 - 200/16/111	931059610000
@ 6	3-V-S838-09406/1	SA106 Gr B	ϕ108x4.5 -405 ~~-369~~	"	4.25	~~364~~ 400	22	10,5	30	~~314~~ 330	100,5	6,6	4.19	S838 - 250/16/111	931066730000
7	3-V-S839-09406/01	SA210 Gr A1 C	ϕ63.5x5.2 -157	15086123	1.24	152	15	7	27	105	56,5	6,6	1.20	S839	931053810000
8	3-V-S840-09406/01	SA210 Gr A1 C	ϕ63.5x5.2 -208	"	1.63	203	15	7	23	160	56,5	6,6	1.59	S840	931034860000
9	3-V-S841-09406	SA106 Gr B	ϕ88.9x6.3 -280	15082140	3.66	275	21	10	34	221	80,5	6,6	3.60	S841	931034870000
10	3-V-S842-09406	SA106 Gr B	ϕ108x4.5 -321	15082162	3.71	316	22	10,5	31	265	100,5	6,6	3.64	S842	931034880000
~~11~~	~~3-V-S843-09406~~	~~SA106 Gr B~~	~~ϕ108x4.5 -568~~	"	~~6.52~~	~~563~~	~~15~~	~~7~~	~~36~~	~~507~~	~~100,5~~	~~6,6~~	~~6.46~~	~~S843~~	—
@ ~~12~~	~~3-V-S844-09406/1~~	~~SA210 Gr A1~~	~~ϕ63.5x5.2 -154~~ 184	~~15086123~~	~~1.21~~	~~149~~ 179	~~15~~	~~7~~	~~23~~	~~106~~ 116	~~56,5~~	~~6,6~~	~~1.18~~	~~S844 - 50/40/111~~	—
@ 13	3-V-S845-09406/02	SA210 Gr A1 C	ϕ63.5x5.2 -180 ~~-210~~	"	1.42	~~175~~ 205	15	7	28	~~127~~ 137	56,5	6,6	1.38	S845 - 65/40/111	931036410000
@ ~~14~~	~~3-V-S846-09406/1~~	~~SA210 Gr A1 C~~	~~ϕ63.5x5.2 -181~~ ~~210~~	"	~~1.42~~	~~176~~ 206	~~15~~	~~7~~	~~18~~	~~138~~ 153	~~56,5~~	~~6,6~~	~~1.39~~	~~S846 - 100/40/111~~	—
@ ~~15~~	~~3-V-S847-09406/1~~	~~SA192~~	~~ϕ76.1x5.6 -269 -237~~	~~15084130~~	~~2.34~~	~~232~~ 264	~~19~~	~~9~~	~~24~~	~~188~~ 200	~~67,5~~	~~6,6~~	~~2.29~~	~~S847 - 150/40/111~~	—
16	3-V-S848-09406/01	SA210 Gr A1 C	ϕ63.5x5.2 -189	15086123	1.49	184	15	7	24	140	56,5	6,6	1.45	S848	931034890000
17	3-V-S849-09406/01	SA210 Gr A1 C	ϕ63.5x5.2 -209	"	1.64	204	15	7	22	162	56,5	6,6	1.61	S849	931036510000
18	3-V-S851-09406	SA106 Gr B	ϕ108x4.5 378	15082162	4.35	373	22	10,5	44	309	100,5	6,6	4.28	S851	931034900000
@ 19	3-V-S852-09406/02	SA210 Gr A1 C	ϕ63.5x5.2 -151 ~~-175~~	15086123	1.19	171 ~~146~~	15	7	20	121 ~~106~~	56,5	6,6	1.16	S852 - 50/64/111	931066740000
@ 20	3-V-S853-09406/02	SA210 Gr A1 C	ϕ63.5x5.2 -205 ~~177~~	"	1.39	197 ~~172~~	15	7	20	132 148	56,5	6,6	1.36	S853. 65/64/111	931049620000
21	3-V-1376-09406	SA106 GR B	ϕ108x4.5-465	15086162	5.81	460	22	105	42	383	100-5	6.6	5.70	ROLL 00533 FRAME 36	931053600000

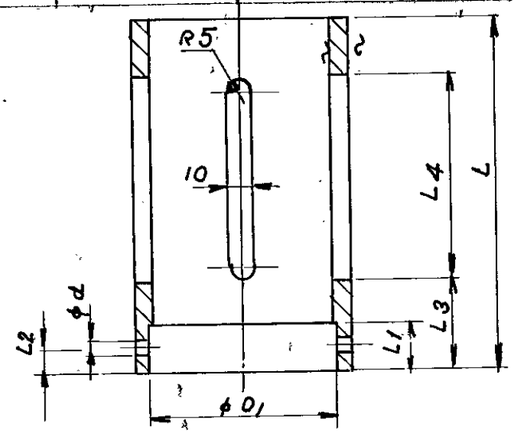

12,5 ~

SA210 Gr A1 C / SA106 Gr B / SA 192	NR.	10	CERTIFY.
MATL. SPECIFICATION	HEAT TREATMENT.	SCRAP SORT	TYPE OF CERTIFICATION

BHARAT HEAVY ELECTRICALS LTD.,
BOILER PLANT UNIT, TIRUCHIRAPALLI-14

FIRST ANGLE	SCALE	DRAWN	M. Dale	TOTAL wt. (kg)	
	NTS	CHECKED		TYPE	
		APPROVED			
ALL DIMENSIONS IN MILLIMETRES		DATE	17.9.77	NEW/OLD DRG. No.	

TITLE: TUBE

DRAWING No. 3-V-S000-09406

REVISION 03

CAUTION

THE INFORMATION CONTAINED IN THIS DRAWING IS THE PROPERTY OF BHARAT HEAVY ELECTRICALS LIMITED., BOILER PLANT UNIT, TIRUCHY-620 014. AND SHALL NOT BE USED WITHOUT THEIR EXPRESS WRITTEN PERMISSION IN ANY FORM OR PART THEREOF FOR ANY OTHER PURPOSE THAN FOR WHICH IT IS SENT TO YOU.

05-222

REV	DATE	ALTD: N.D.PAL	REV	DATE	ALTERED: N.D.PAL	01	DATE 12.1.79	ALTERED P. Rathinam
03	03.04.99	CKD&APPD:	02	9/11/94	CHECKED:			CHECKED

1) SL.NO. 1, 3, 11, 12, 14, 15 deleted
2) MATL SA210 Gr A1 CORRECTED AS SA210 Gr C
REFER DCN. NO: CS: 0989

SL.NO. 21 IS INCLUDED

ZONE @

DIMENSIONS L, L3 & L4 CHANGED IN SL.NOS- 1, 3, 4, 5, 6, 12, 13, 14 & 15, 19 & 20 TO AVOID ASSY. PROBLEMS

FOR TOLERANCES OF UNTOLERANCED DIMENSIONS DURING MANUFACTURE REFER RELEVANT QCP/QP

FIRST ANGLE PROJECTION (ALL DIMENSIONS IN MILLIMETRES)

CAUTION THE INFORMATION ON THIS DOCUMENT IS THE PROPERTY OF BHARAT HEAVY ELECTRICALS LTD. IT MUST NOT BE USED DIRECTLY OR INDIRECTLY IN ANY WAY DETRIMENTAL TO THE INTEREST OF THE COMPANY.

DRAWING NO. 3-V-0000-06163/08

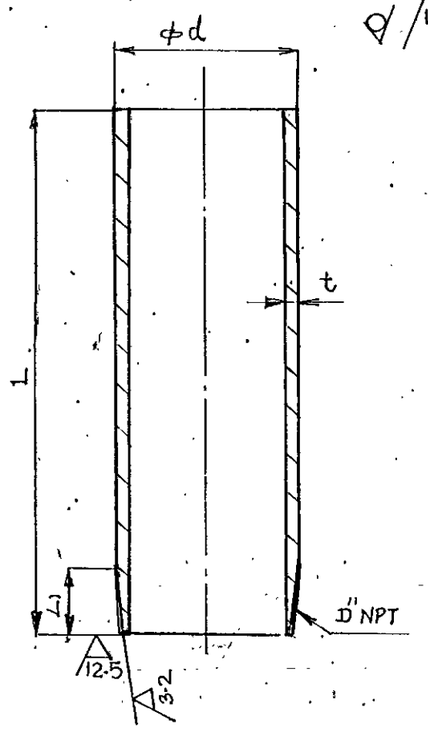

SL NO	DRAWING NO.	MATL SPECN.	MATL. SIZE	MATL. CODE	SCRAP SORT	RAW MATL. WT.	D" NPT	TPI	φd	t	L	L1	FINISH WT.	APPLICABLE TYPE NO.	REMARKS
1	3-V-1084-06163/01	IS:2062 FE410 WB	PIPE φ60.8X4.5-175	15038091	10	1.09	2" NPT	11 1/2	60.8	4.5	175	27	1.09	1084,1085	93060893
2	3-V-1083-06163/01		PIPE φ89.5X4.85-390	15038073		3.95	3" NPT	8	89.5	4.85	390	41	3.95	1083	93060859
3	3-V-1897-06163/01		PIPE φ89.5X4.85-150	15038073		1.50	3" NPT	8	89.5	4.85	150	41	1.50	1897, 1991 1992	93060902
4	3-V-1700-06163/01		PIPE φ60.8X4.5-350	15038091		2.18	2" NPT	11 1/2	60.8	4.5	350	27	2.18	1700	93060995
5	3-V-1706-06163/01	SA 106 GR-B	PIPE φ108X8-200	15082164		3.92	3 1/2" NPT	8	108	8	200	43	3.92	1706, 1707	93060900
6	3-V-1705-06163/02	SA 106 GR.B	PIPE φ114.3X6.02-220	15082158		3.53	4" NPT	8	114.3	6.02	200	44	3.2	1705	93060996
(b) 7	3-V-1027-06163/01	IS:2062 FE410 WB	PIPE φ60.8X4.5-100	15038091		0.72	2" NPT	11 1/2	60.8	4.5	100	27	0.72	1027	93061243
(b) 8	3-V-1626-06163/01		PIPE φ89.5X4.85-250	15038073		2.53	3" NPT	8	89.5	4.85	250	41	2.53	1626	93100004
(c) 9	3-V-1780-06163/01	SA 106 GR-B	PIPE φ108X8-352	15082164		6.89	3 1/2" NPT	8	108	8	350	43	6.88	1780	93061167
(c) (e) 10	3-V-1782-06163/03		PIPE φ114.3X6.02-470	15082158		7.54	4" NPT	8	114.3	6.02	450 (e) ~~400~~	44	7.22	1782	93061165
(d) 11	3-V-B510-06163/02		PIPE φ114.3X6.02-120			1.93	4" NPT	8	114.3	6.02	100	44	1.6	B510	93101452
12	3-V-C094-06163/01		PIPE φ76.1X7.1-155			2.06					150		2.04	C094	93101583
13	3-V-C095-06163/01	SA 210 GR.A1	PIPE φ76.1X7.1-255	1508612466		3.42	2 1/2" NPT	8	76.1	7.1	250	39.9	3.4	C095	93101584
14	3-V-C065-06163/01		PIPE φ76.1X7.1-355			4.78					350		4.76	C065	93101585
15	3-V-B530-06163/02	SA 106 Gr.B	φ114.3X6.02-220	15082158		3.53	4" NPT	8	114.3	6.02	200	44	3.2	B530	93102230

VARIANT NO.	ITEM NO.	DESCRIPTION	STD	DRAWING NO.	ITEM NO.	MATL CODE	A/C	UNIT	UNIT WT	GS
					VAR NO.	MATL SPEC			QTY	

REV	DATE	ALTD / CHKD	REV	DATE	ALTD / CHKD	REV	DATE	ALTD / CHKD
07	25.11.96	ALTD: T.C. / CHKD: BAPPD	08	2.7.98	ALT. R.L. / CHK & APPD. M.R.K.			

NOTES UPDATED

MATL. SA 106 GR.B WAS IS 2062 FE410 WB FOR SL.NOS. 6, 10, 11 & 15. DCN No. HM 0329

DCN NO. CS:0632

REV	DATE	ALTD / CHD	REV	DATE	ALTD / CHKD	REV	DATE	ALTD / CHD
06	25.8.88	ALTD: N.P.ESWAR / CHD: N.NAGARAJ	05	4.3.87	ALTD: N.D.PAL / CHKD: S.KUMAR	04	25-8-86	ALTD: S.J.WESLEY / CHD: N.NAGARAJAN
	SL NO.15 INCLUDED		(e)		1. INDEXED DIMENSIONS ALTERED 2. SL.NO.12, 13, 14 INCLUDED	(d)		SL.No. 11 INCLUDED

REV	DATE	ALTERED / CHECKED	REV	DATE	ALTERED / CHECKED	REV	DATE	ALTERED / CHECKED
03	15.12.83	ALTERED: L.R.SAMY. / CHECKED: S.KUMAR	02	17.9.83	ALTERED: N.D.PAL / CHECKED: S.KUMAR	01	28-10-82	ALTERED D.VIJAY / CHECKED S.KUMAR
(c)	SL.No.9 AND 10 INCLUDED		(b)		SL NO. 7 and 8 INCLUDED	(a)		SL NO: 3,4,5 & 6 INCLUDED

TYPE OF PRODUCT OR NAME OF CUSTOMER/PROJECT

MICROFILMED ON 55418 B&W

Bharat Heavy Electricals Ltd.,
BOILER PLANT UNIT
TIRUCHIRAPALLI-620 014

	NAME	SIGN	DATE
DRN	N.D. PAL		17-3-82
CHD	D. VIJAY		17-3-82
APPD	S. KUMAR		17-3-82

NO. OF VAR

DEPT.	GRADE OF UNTOL. DIM	SCALE	WEIGHT (kg)	REF TO ASSY / OLD DRG	ITEM NO.
VL		NTS	—		
CODE 320					

TITLE	CARD CODE	DRAWING NO.	REV
TUBE	U 01	3-V-0000-06163	08

Size A3

05-229/C

FOR TOLERANCES OF UNTOLERANCED DIMENSIONS DURING MANUFACTURE REFER RELEVANT QCP/QP

FIRST ANGLE PROJECTION (ALL DIMENSIONS IN MILLIMETRES)

CAUTION THE INFORMATION ON THIS DOCUMENT IS THE PROPERTY OF BHARAT HEAVY ELECTRICALS LTD. IT MUST NOT BE USED DIRECTLY OR INDIRECTLY IN ANY WAY DETRIMENTAL TO THE INTEREST OF THE COMPANY.

DRAWING NO. 3-V-0000-06163/08

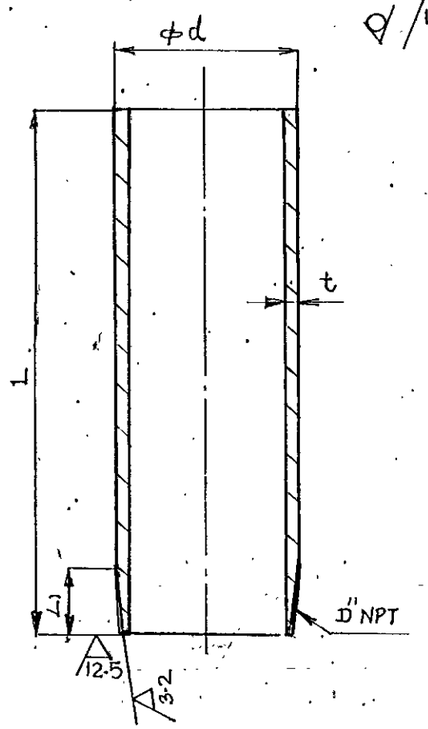

SL NO	DRAWING NO.	MATL SPECN.	MATL. SIZE	MATL. CODE	SCRAP SORT	RAW MATL. WT.	D" NPT	TPI	φd	t	L	L1	FINISH WT.	APPLICABLE TYPE NO.	REMARKS
1	3-V-1084-06163/01	IS:2062 FE410 WB	PIPE φ60.8X4.5-175	15038091	10	1.09	2" NPT	11 1/2	60.8	4.5	175	27	1.09	1084,1085	93060893
2	3-V-1083-06163/01		PIPE φ89.5X4.85-390	15038073		3.95	3" NPT	8	89.5	4.85	390	41	3.95	1083	93060859
3	3-V-1897-06163/01		PIPE φ89.5X4.85-150	15038073		1.50	3" NPT	8	89.5	4.85	150	41	1.50	1897, 1991 1992	93060902
4	3-V-1700-06163/01		PIPE φ60.8X4.5-350	15038091		2.18	2" NPT	11 1/2	60.8	4.5	350	27	2.18	1700	93060995
5	3-V-1706-06163/01	SA 106 GR-B	PIPE φ108X8-200	15082164		3.92	3 1/2" NPT	8	108	8	200	43	3.92	1706, 1707	93060900
6	3-V-1705-06163/02	SA 106 GR.B	PIPE φ114.3X6.02-220	15082158		3.53	4" NPT	8	114.3	6.02	200	44	3.2	1705	93060996
(b) 7	3-V-1027-06163/01	IS:2062 FE410 WB	PIPE φ60.8X4.5-100	15038091		0.72	2" NPT	11 1/2	60.8	4.5	100	27	0.72	1027	93061243
(b) 8	3-V-1626-06163/01		PIPE φ89.5X4.85-250	15038073		2.53	3" NPT	8	89.5	4.85	250	41	2.53	1626	93100004
(c) 9	3-V-1780-06163/01	SA 106 GR-B	PIPE φ108X8-352	15082164		6.89	3 1/2" NPT	8	108	8	350	43	6.88	1780	93061167
(c) (e) 10	3-V-1782-06163/03		PIPE φ114.3X6.02-470	15082158		7.54	4" NPT	8	114.3	6.02	450 (e) ~~400~~	44	7.22	1782	93061165
(d) 11	3-V-B510-06163/02		PIPE φ114.3X6.02-120			1.93	4" NPT	8	114.3	6.02	100	44	1.6	B510	93101452
12	3-V-C094-06163/01		PIPE φ76.1X7.1-155			2.06					150		2.04	C094	93101583
13	3-V-C095-06163/01	SA 210 GR.A1	PIPE φ76.1X7.1-255	1508612466		3.42	2 1/2" NPT	8	76.1	7.1	250	39.9	3.4	C095	93101584
14	3-V-C065-06163/01		PIPE φ76.1X7.1-355			4.78					350		4.76	C065	93101585
15	3-V-B530-06163/02	SA 106 Gr.B	φ114.3X6.02-220	15082158		3.53	4" NPT	8	114.3	6.02	200	44	3.2	B530	93102230

VARIANT NO.	ITEM NO.	DESCRIPTION	STD	DRAWING NO.	ITEM NO.	MATL CODE	A/C	UNIT	UNIT WT	GS
					VAR NO.	MATL SPEC			QTY	

REV	DATE	ALTD / CHKD	REV	DATE	ALTD / CHKD	REV	DATE	ALTD / CHKD
07	25.11.96	ALTD: T.C. / CHKD: BAPPD	08	2.7.98	ALT. R.L. / CHK & APPD. M.R.K.			

NOTES UPDATED

MATL. SA 106 GR.B WAS IS 2062 FE410 WB FOR SL.NOS. 6, 10, 11 & 15. DCN No. HM 0329

DCN NO. CS:0632

REV	DATE	ALTD / CHD	REV	DATE	ALTD / CHKD	REV	DATE	ALTD / CHD
06	25.8.88	ALTD: N.P.ESWAR / CHD: N.NAGARAJ	05	4.3.87	ALTD: N.D.PAL / CHKD: S.KUMAR	04	25-8-86	ALTD: S.J.WESLEY / CHD: N.NAGARAJAN
	SL NO.15 INCLUDED		(e)		1. INDEXED DIMENSIONS ALTERED 2. SL.NO.12, 13, 14 INCLUDED	(d)		SL.No. 11 INCLUDED

REV	DATE	ALTERED / CHECKED	REV	DATE	ALTERED / CHECKED	REV	DATE	ALTERED / CHECKED
03	15.12.83	ALTERED: L.R.SAMY. / CHECKED: S.KUMAR	02	17.9.83	ALTERED: N.D.PAL / CHECKED: S.KUMAR	01	28-10-82	ALTERED D.VIJAY / CHECKED S.KUMAR
(c)	SL.No.9 AND 10 INCLUDED		(b)		SL NO. 7 and 8 INCLUDED	(a)		SL NO: 3,4,5 & 6 INCLUDED

TYPE OF PRODUCT OR NAME OF CUSTOMER/PROJECT

MICROFILMED ON 55418 B&W

Bharat Heavy Electricals Ltd.,
BOILER PLANT UNIT
TIRUCHIRAPALLI-620 014

	NAME	SIGN	DATE
DRN	N.D. PAL		17-3-82
CHD	D. VIJAY		17-3-82
APPD	S. KUMAR		17-3-82

NO. OF VAR

DEPT.	GRADE OF UNTOL. DIM	SCALE	WEIGHT (kg)	REF TO ASSY / OLD DRG	ITEM NO.
VL		NTS	—		
CODE 320					

TITLE	CARD CODE	DRAWING NO.	REV
TUBE	U 01	3-V-0000-06163	08

Size A3

05-229/C

ALL DIMENSIONS ARE IN MILLIMETRES.

FOR TOLERANCES OF UNTOLERANCED DIMENSIONS DURING MANUFACTURE REFER RELEVANT QCP/QP

REV	DATE	ALTERED	K.S
02	9.11.04	CHD & APPD	S.N

DRAWING REDRAWN.

DCN NO: 800386

12.5 (~ 3.2 6.3)

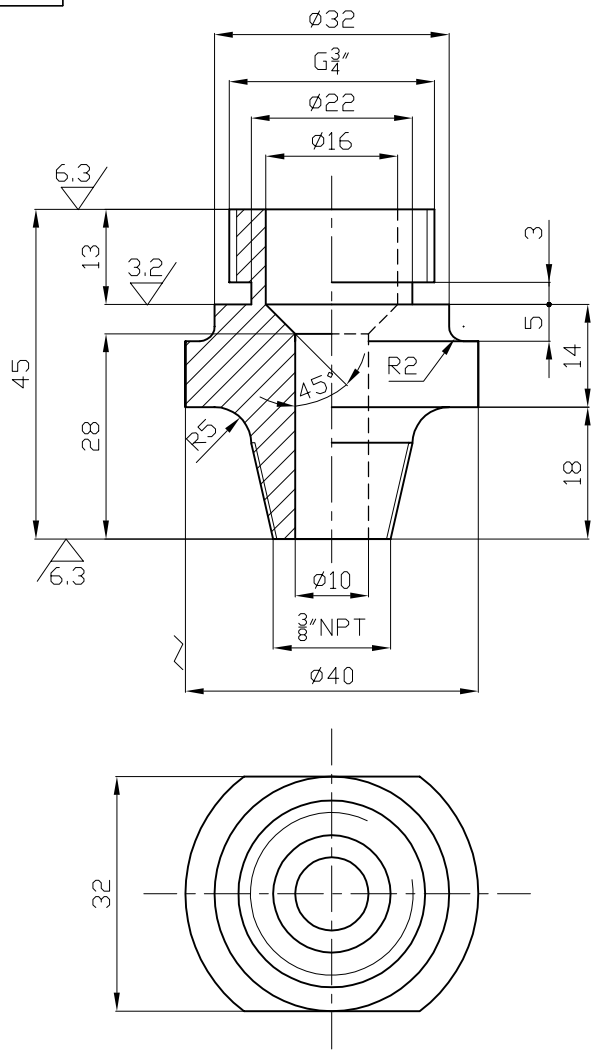

1. FOR QUALITY REQUIREMENTS REFER LATEST APPLICABLE QUALITY PROCEDURES.

PART CODE: 842020131700

NO OFF	DESCRIPTION	MATL CODE	MATL SPECN	HEAT TREATMENT	SCRAP SORT	NET WT (kg)	GROSS WT (kg)	DRAWING No	ITEM No
	D40X45	15024259	SA182F6ACL3			0.250			

BHARAT HEAVY ELECTRICALS LTD.,
UNIT: HIGH PRESSURE BOILER PLANT.
TIRUCHIRAPALLI 620014.
365-122

	NAME	SIGN	DATE
DRN	S.NAPPI	S.N	9.11.04
CHD	K.SRIDHARAN	K.S	9.11.04
APPD	S.NATARAJAN	S.N	9.11.04

NO.OF VAR

DEPT	SCALE	WEIGHT (KG).	REFERENCE INFORMATIONS	NO. OF ITEMS
VL	1:1	0.250		

CODE

TITLE	CARD CODE	DRAWING NO.	REV
VALVE BODY COVER	U 01	4-20-201-01423	02

Size A4

CAUTION: The information on this document is the property of BHARAT HEAVY ELECTRICALS LTD. It must not be used directly or indirectly in any way detrimental to the interest of the company.

CORPORATE DRG ID
TP-DG-4-20-201-01423

CORPORATE DRG ID
TP-DG-4-20-201-01423

ALL DIMENSIONS ARE IN MILLIMETRES.

FOR TOLERANCES OF UNTOLERANCED DIMENSIONS DURING MANUFACTURE REFER RELEVANT QCP/QP

REV	DATE	ALTERED	K.S
05	9.11.04	CHD & APPD	S.N

DRG. REDRAWN.

DCN.NO. 800386

12.5 (~ , 0.1 , 3.2)

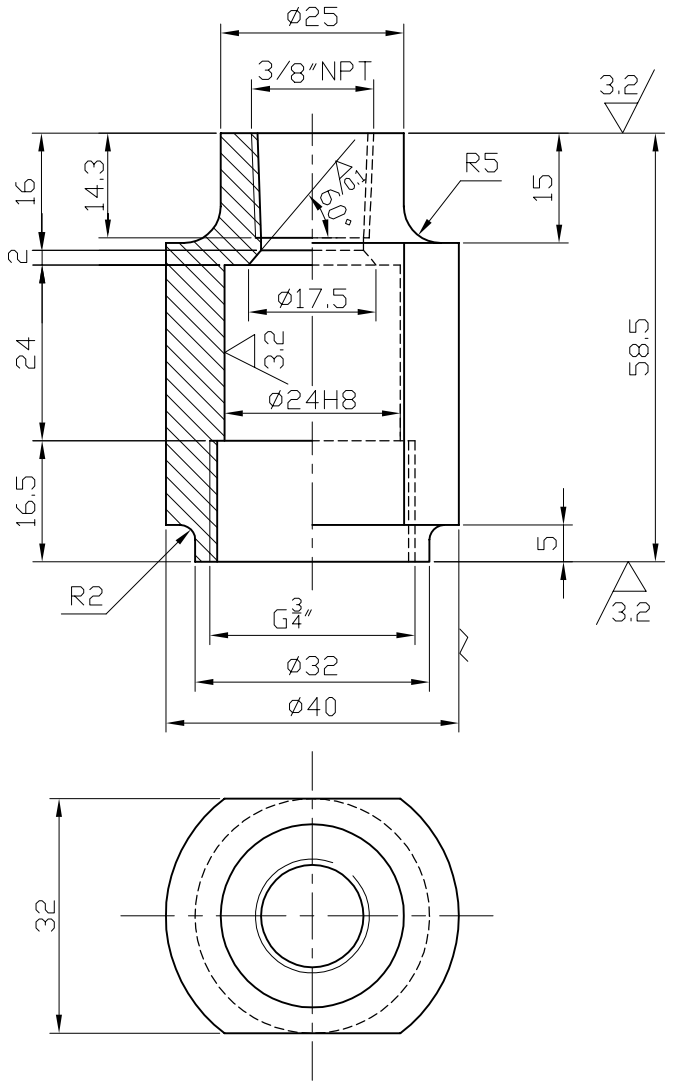

TOLERANCE VALVE.

$\phi 24H8 = \phi 24^{+0.033}_{0}$

PART CODE: 842020131600

NO OFF	DESCRIPTION	MATL CODE	MATL SPECN	HEAT TREATMENT	SCRAP SORT	NET WT (kg)	GROSS WT (kg)	DRAWING No	ITEM No
	VALVE BODY D40X60	150242590000	SA182F6ACL3			0.570			

BHARAT HEAVY ELECTRICALS LTD.,
UNIT: HIGH PRESSURE BOILER PLANT.
TIRUCHIRAPALLI 620014.
365-122

	NAME	SIGN	DATE	NO.OF VAR
DRN	S.NAPPI	S.N	9.11.04	
CHD	K.SRIDHARAN	K.S	9.11.04	
APPD	S.NATARAJAN	S.N	9.11.04	

DEPT	SCALE	WEIGHT (KG).	REFERENCE INFORMATIONS	NO. OF ITEMS
SB	NTS	0.570		
CODE 330				

TITLE	CARD CODE	DRAWING NO.	REV
VALVE BODY	U 01	4-20-201-01422	05

Size A4

CAUTION: The information on this document is the property of BHARAT HEAVY ELECTRICALS LTD. It must not be used directly or indirectly in any way detrimental to the interest of the company.

CORPORATE DRG ID
TP-DG-4-20-201-01422

CORPORATE DRG ID
TP-DG-4-20-201-01422

DRAWING NO. 1-20-001-00010

ALL DIMENSIONS ARE IN MILLIMETRES. FOR TOLERANCES OF UNTOLERANCED DIMENSIONS DURING MANUFACTURE REFER RELEVANT QCP/QP

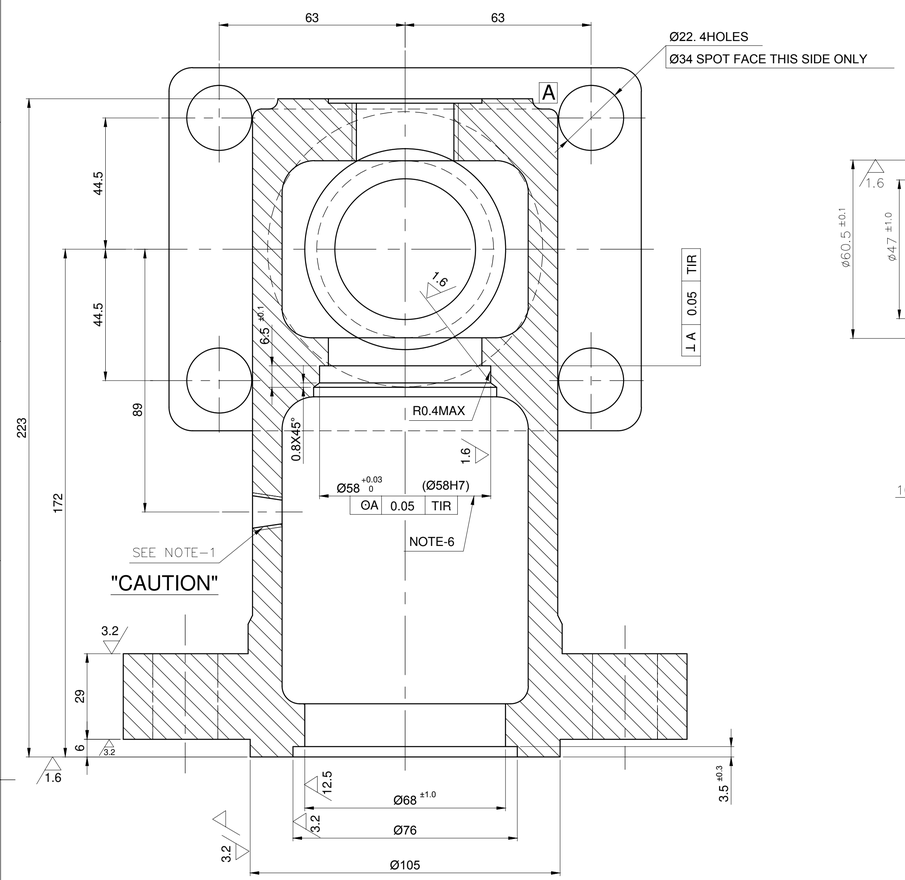

STELLITE SEAT INSERT (ITEM 02) OMITTED IN THIS VIEW

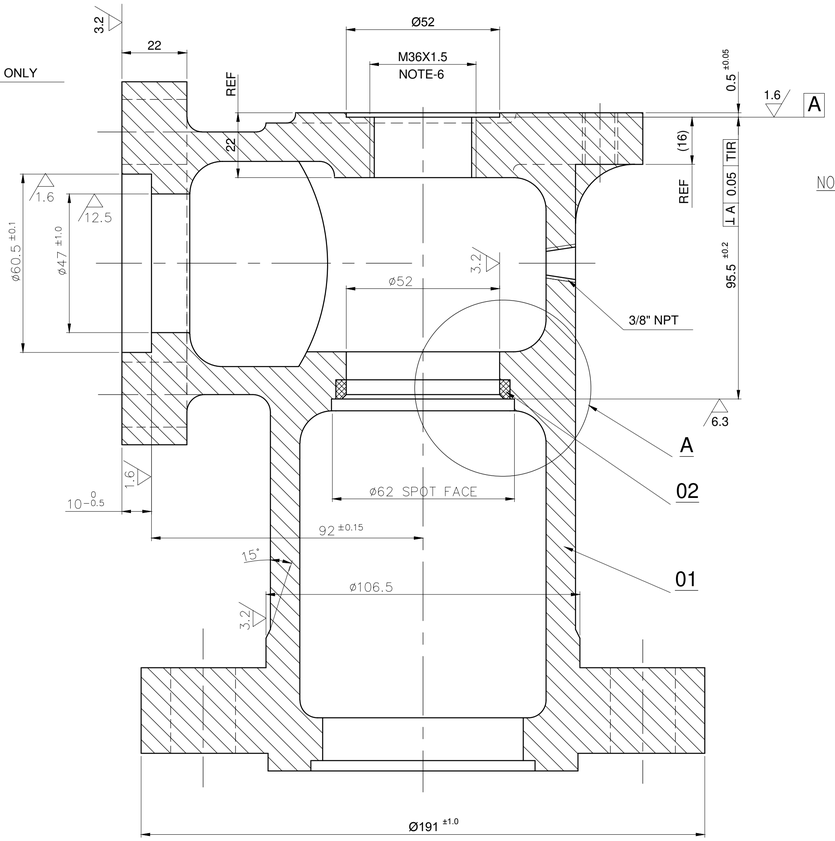

NOTES:-

1. 3/8" NPT THREADED HOLE SHOULD NOT BE MADE UNLESS OTHERWISE SPECIFICALLY CALLED FOR.
2. MINIMUM WALL THICKNESS 11MM. IS TO BE MAINTAINED.
3. FOLLOW THE PROCEDURE FOR PRESS. FITTING THE SEAT INSERT IN TO BODY.
4. SEE ASSEMBLY INSTRUTION (DRG. NO. 4-20-201-02065 & 4-20-201-02064).
5. THE INLET OF VALVE BODY SHOULD BE HYDRAULICALLY TESTED AT 90KG/CM² FOR WCB CASTING AND WC6 CASTINGS.
6. Ø58H7 & M36X1.5 ARE TO BE MACHINED IN ONE SETTING AND THE CONCENTRICITY SHOULD BE WITHIN 0.05MM.
7. IF THIS IS NOT CARRIED OUT IN ONE SETTING; METHODS SHOULD BE DEVELOPED TO ATTAIN THE CONCENTRICITY SPECIFIED.
8. INSPECTORS TO CHECK THIS ON ALL VALVE BODIES.

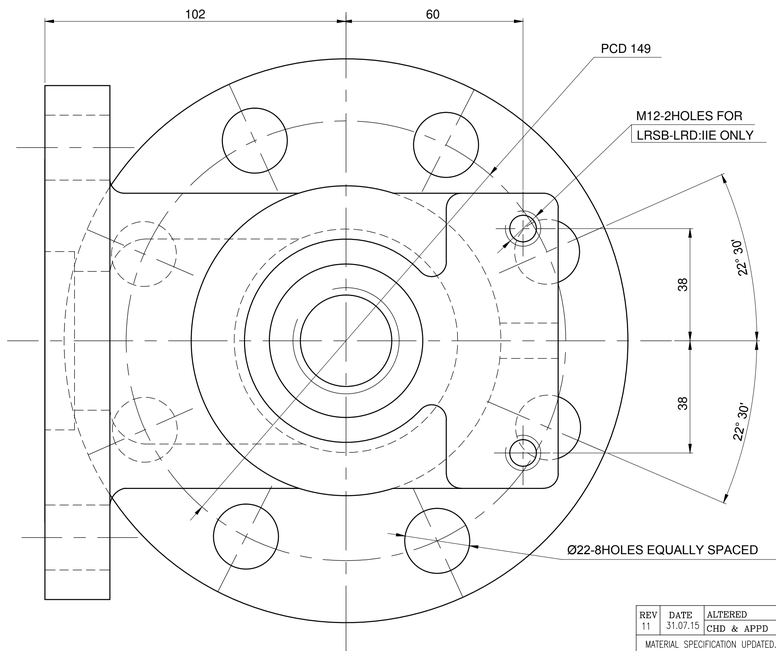

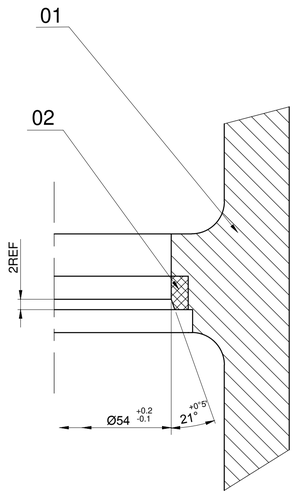

DETAIL-'A'

MACHINING OF STELLITE SEAT INSERT

VARIANT No.	ITEM No.	DESCRIPTION	DRAWING No.	MATERIAL CODE / MATERIAL SPECIFICATION	A/C/P	UNIT WEIGHT (kg) / QUANTITY (Nos.)
	02	SEAT INSERT	4-20-201-00796	920250930000 / STELLITE		0.040 / 1
04	01	VALVE BODY (WC6- NTPC)	1-20-001-00010	920131810100 / ASTM A217 WC6	A	16.000 / 1
03	01	VALVE BODY (WCB- NTPC)	1-20-001-00190	920243870100 / ASTM A216 WCB	A	16.000 / 1
02	01	VALVE BODY (WC6)	1-20-001-00190	920131810000 / ASTM A217 WC6	A	16.000 / 1
01	01	VALVE BODY (WCB)	1-20-001-00190	920243870000 / ASTM A216 WCB	A	16.000 / 1

REV	DATE	ALTERED	
11	31.07.15	CHD & APPD	J.S S.K.G & H.R

MATERIAL SPECIFICATION UPDATED.

DCN:SB: 801968 / 5019944

CAUTION: The information on this document is the property of BHARAT HEAVY ELECTRICALS LTD. It must not be used directly or indirectly in any way detrimental to the interest of the company.

TYPE OF PRODUCT
OR NAME OF
CUSTOMER/PROJECT

BHARAT HEAVY ELECTRICALS LTD.,
UNIT: HIGH PRESSURE BOILER PLANT.
TIRUCHIRAPALLI-620014.
365-119

	NAME	SIGN	DATE
DRN	J.SANKAR	J.S	14.03.09
CHD	K.SRIDHARAN	K.S	14.03.09
APPD	S.NATARAJAN	S.N	14.03.09

DEPT SB
CODE 330
SCALE 1:1
WEIGHT (KG). 16.030
REFERENCE INFORMATIONS

TITLE: VALVE BODY
2 1/2" (NB 65MM)

CARD CODE U 01

DRAWING NO. 1-20-001-00010

REV 11

Size A1

DRAWING NO. 1-20-001-00269

ALL DIMENSIONS ARE IN MILLIMETRES. FOR TOLERANCES OF UNTOLERANCED DIMENSIONS DURING MANUFACTURE REFER RELEVANT QCP/QP

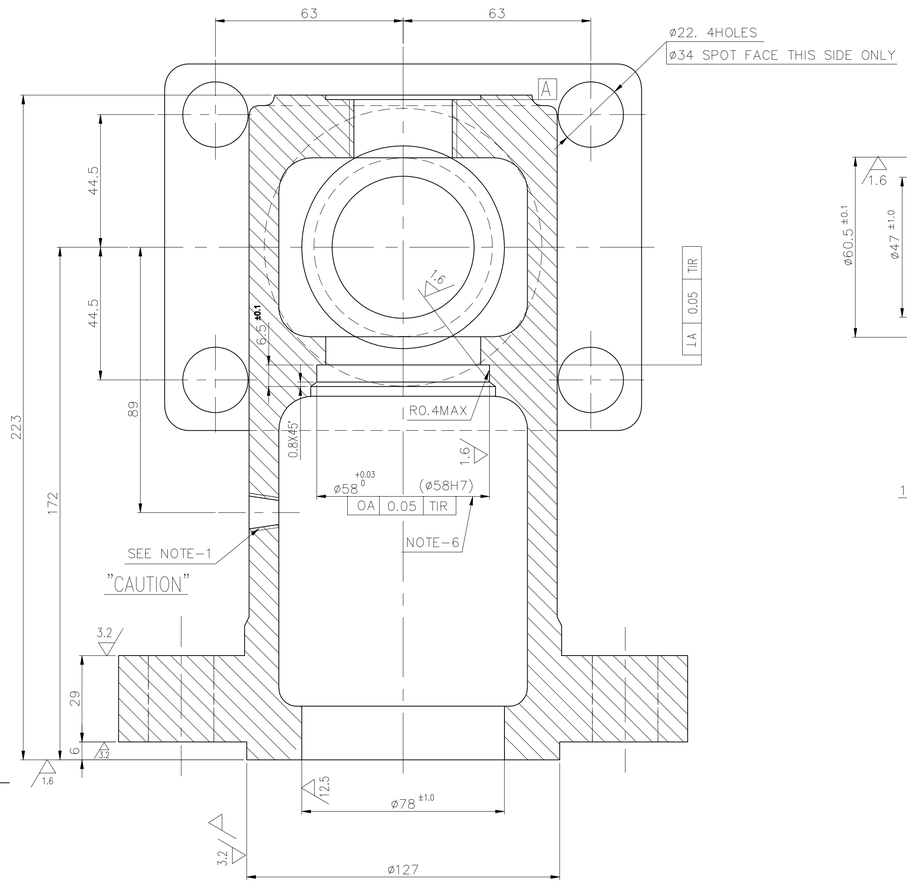

STELLITE SEAT INSERT (ITEM 02) OMITTED IN THIS VIEW

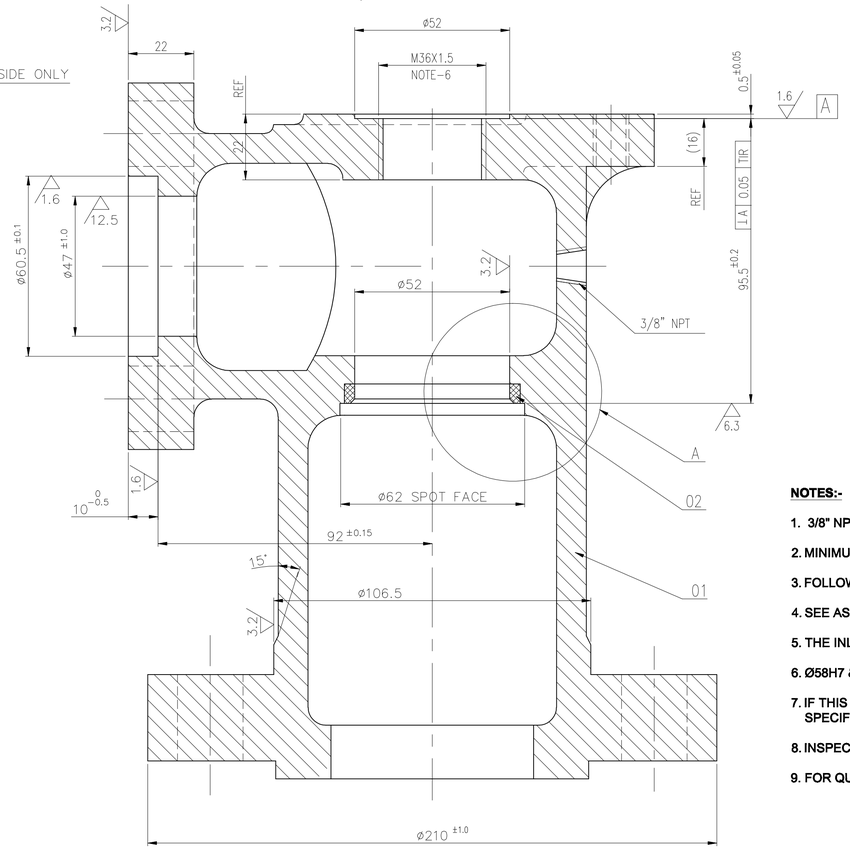

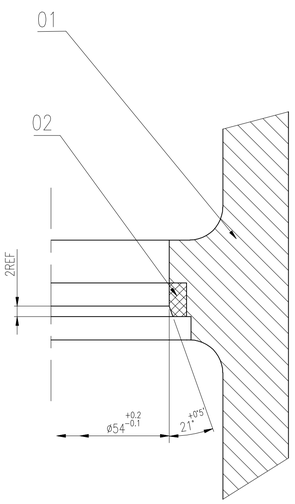

DETAIL-'A'

MACHINING OF STELLITE SEAT INSERT

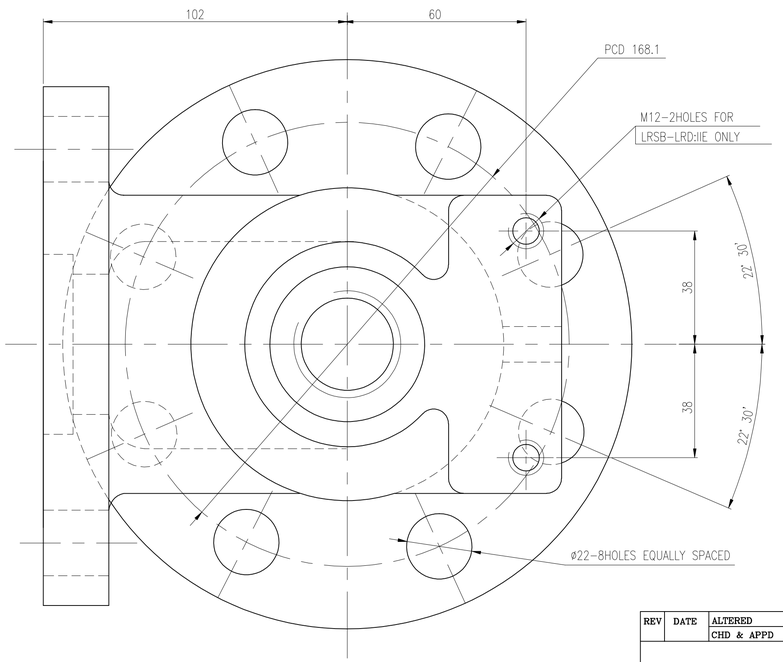

NOTES:-

1. 3/8" NPT THREADED HOLE SHOULD NOT BE MADE UNLESS OTHERWISE SPECIFICALLY CALLED FOR.
2. MINIMUM WALL THICKNESS 11mm IS TO BE MAINTAINED.
3. FOLLOW THE PROCEDURE FOR PRESS. FITTING THE SEAT INSERT IN TO BODY.
4. SEE ASSEMBLY INSTRUCTION (DRAWING. NO. 4-20-201-02065 & 4-20-201-02064).
5. THE INLET OF VALVE BODY SHOULD BE HYDRAULICALLY TESTED AT 78 kg/cm² FOR WCB AND 79.5kg/cm² for WC6.
6. Ø58H7 & M36X1.5 ARE TO BE MACHINED IN ONE SETTING AND THE CONCENTRICITY SHOULD BE WITHIN 0.05mm.
7. IF THIS IS NOT CARRIED OUT IN ONE SETTING; METHODS SHOULD BE DEVELOPED TO ATTAIN THE CONCENTRICITY SPECIFIED.
8. INSPECTORS TO CHECK THIS ON ALL VALVE BODIES.
9. FOR QUALITY REQUIREMENTS REFER LATEST QUALITY PROCEDURES.

PART CODE(WCB) :842000125402
PART CODE(WC6) :842000125403
PART CODE(NTPC-WCB) :842000125404
PART CODE(NTPC-WC6) :842000125405

VARIANT No.	ITEM No.	DESCRIPTION	DRAWING No.	RAW MATERIAL CODE	MATERIAL SPECN	A/C/P	UNIT WEIGHT(kg)	No. OFF
	2	SEART INSERT	4-20-201-00796	920250930000	STELITE 12		0.03	1
04	1	VALVE BODY CASTING(NTPC-AS)	1-20-001-00268	920131810300	A 217 WC6	A	18	1
03	1	VALVE BODY CASTING(NTPC-CS)	1-20-001-00268	920243870300	A 216 WCB	A	18	1
02	1	VALVE BODY CASTING (AS)	1-20-001-00268	920131810200	A 217 WC6	A	18	1
01	1	VALVE BODY CASTING (CS)	1-20-001-00268	920243870200	A 216 WCB	A	18	1

REV	DATE	ALTERED
		CHD & APPD

CAUTION: The information on this document is the property of BHARAT HEAVY ELECTRICALS LTD. It must not be used directly or indirectly in any way detrimental to the interest of the company.

TYPE OF PRODUCT
OR NAME OF
CUSTOMER/PROJECT

BHARAT HEAVY ELECTRICALS LTD.,
UNIT: HIGH PRESSURE BOILER PLANT.
TIRUCHIRAPALLI-620014.
365-119

	NAME	SIGN	DATE
DRN	J.SANKAR	J.S	12.09.11
CHD	K.SRIDHARAN	K.S	12.09.11
APPD	K.SRIDHARAN	K.S	12.09.11

DEPT SB
CODE 330
SCALE NTS
WEIGHT (KG). -
REFERENCE INFORMATIONS

TITLE VALVE BODY
(DM-3" 300#)
CARD CODE U 01
DRAWING NO. 1-20-001-00269
REV 00

Size A1

DRAWING NO. 1-20-201-00162

ALL DIMENSIONS ARE IN MILLIMETRES. FOR TOLERANCES OF UNTOLERANCED DIMENSIONS DURING MANUFACTURE REFER RELEVANT QCP/QP

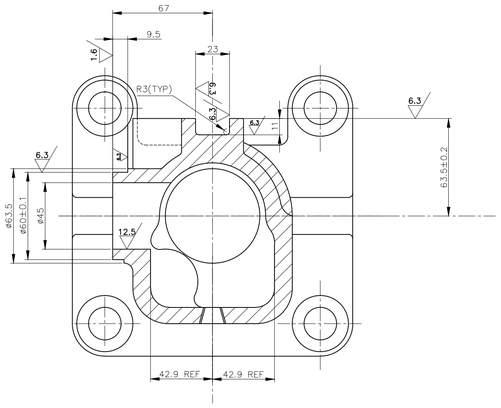

SECTION-BB

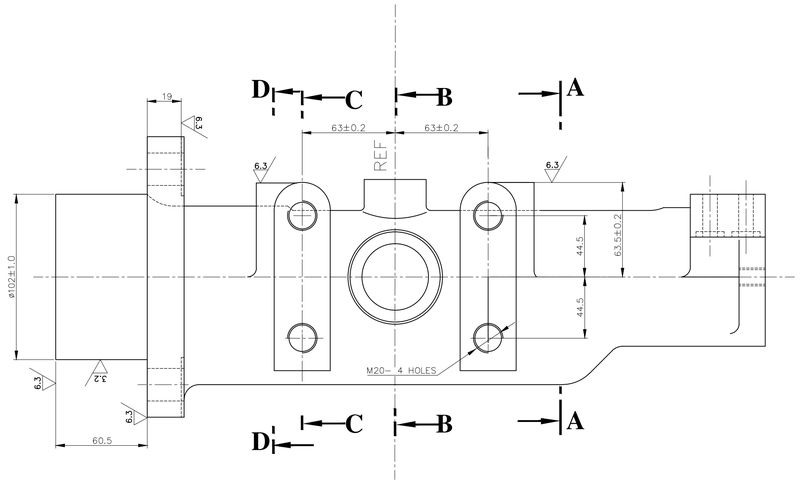

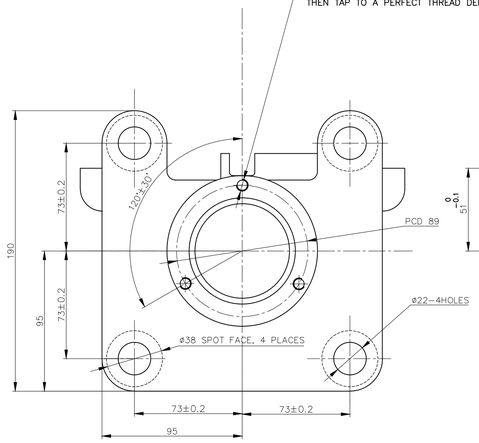

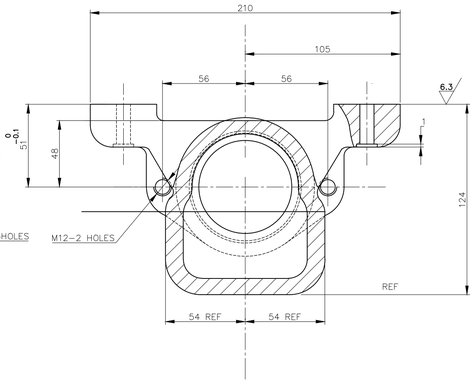

SECTION-AA

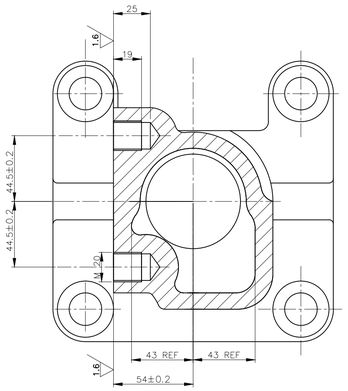

SECTION-CC

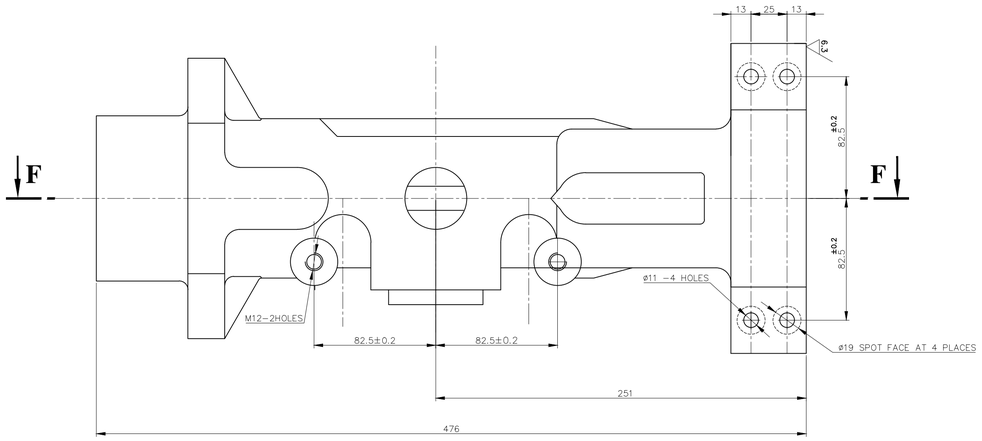

NOTES: –

1. FOR QUALITY REQUIREMENTS REFER LATEST APPLICABLE QUALITY PROCEDURE.
2. FOR CASTING REFER DRAWING No: 1–20–201–00189.
3. * TO BE MACHINED IF NECCESARY.

VARIANT No.	DIMENSIONS			PART No.
	A	B	C	
1	50	50.5	$73^{+0.03}_{0}$	842020139800
2	38.5±0.1	38.5±0.1	$71.9^{+0.02}_{0}$	842020139900

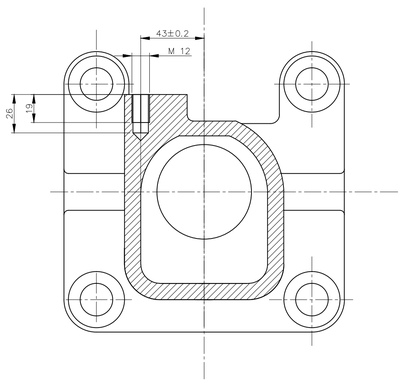

SECTION-DD

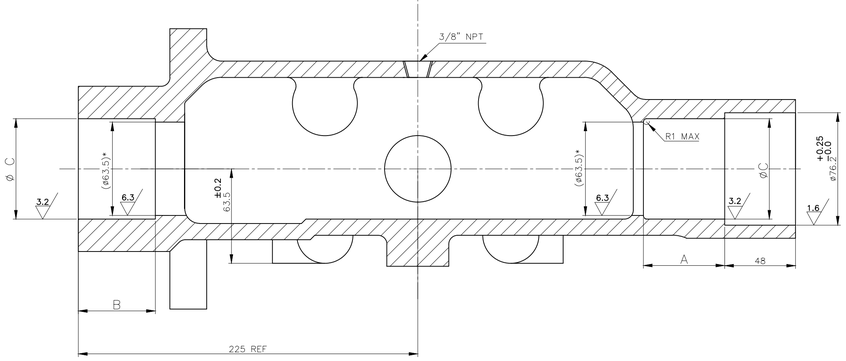

SECTION-FF

FOR DIMENSIONS A, B & C REFER TABLE

No OFF	DESCRIPTION	MATL CODE	MATL SPECN	HEAT TREATMENT	SCRAP SORT	NET WT (kg)	GROSS WT (kg)	DRAWING No	ITEM No
		920057850000	A216 WCB	NORMALISED	10	25.0	27.0		

TYPE OF PRODUCT
OR NAME OF
CUSTOMER/PROJECT

BHARAT HEAVY ELECTRICALS LTD.,
UNIT: HIGH PRESSURE BOILER PLANT.
TIRUCHIRAPALLI 620014.
365–119

	NAME	SIGN	DATE
DRN	J.SANKAR	J.S	27.02.12
CHD	S.K.GUPTA	S.K.G	27.02.12
APPD	K.SRIDHARAN	K.S	27.02.12

REV	DATE	ALTERED	J.S
05	27.02.12	CHD & APPD	S.K.G & K.S

DRAWING CONVERTED AS CAD & UPDATED.

DCN:SB: 801294 / 5014784

CAUTION: The information on this document is the property of BHARAT HEAVY ELECTRICALS LTD. It must not be used directly or indirectly in any way detrimental to the interest of the company.

DEPT SB | CODE 330 | SCALE NTS | WEIGHT (KG). – | REFERENCE INFORMATIONS 1–20–201–00026

TITLE: WALL DESLAGGER BODY | CARD CODE U 01 | DRAWING NO. 1–20–201–00162 | REV 05

Size A1

ALL DIMENSIONS ARE IN MILLIMETRES. FOR TOLERANCES OF UNTOLERANCED DIMENSIONS DURING MANUFACTURE REFER RELEVANT QCP / QP.

DRAWING NO. 3-20-201-00151

FINISH ALL OVER 3.2

TOLERANCE	VALUE
16e9	$16^{-0.032}_{-0.075}$
5JS9	5 ±0.015

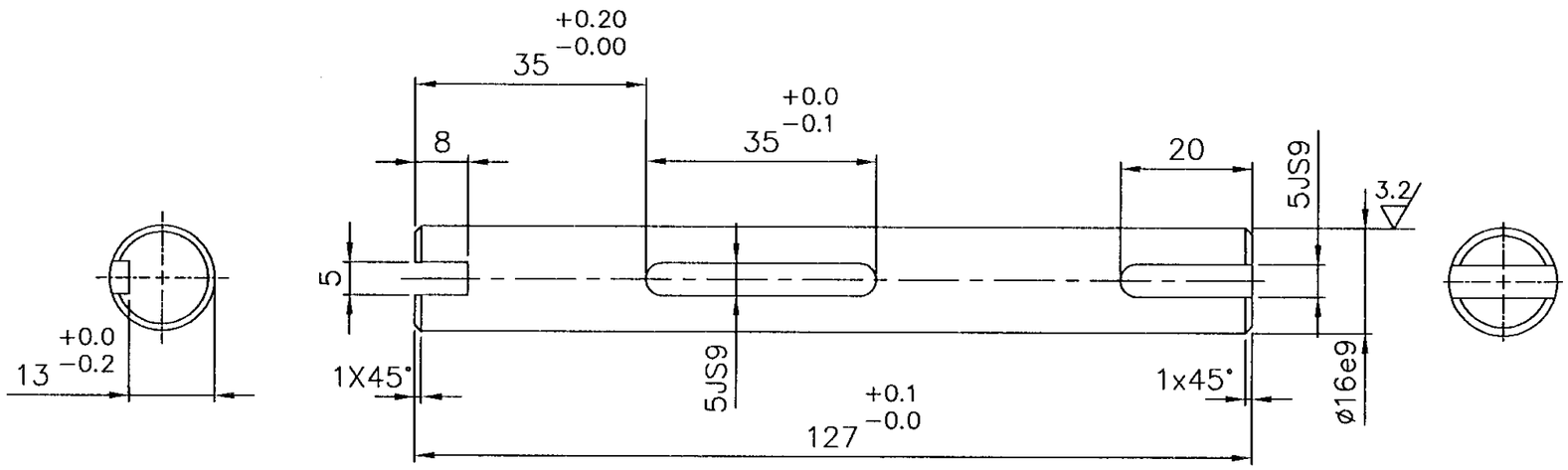

NOTES:-

1. FOR QUALITY REQUIREMENTS REFER LATEST APPLICABLE QUALITY PROCEDURES.
2. TO BE PHOSPATED.

PART CODE : 842020111400

NO OFF	DESCRIPTION	MATL CODE	MATL SPECN	HEAT TREATMENT	SCRAP SORT	NET WT (kg)	GROSS WT (kg)	DRAWING No	ITEM No
01	D 25 X 130	15 339 139	SA 105			0.57			01

TYPE OF PRODUCT
OR NAME OF
CUSTOMER/PROJECT

BHARAT HEAVY ELECTRICALS LTD.,
UNIT: HIGH PRESSURE BOILER PLANT.
TIRUCHIRAPALLI-620014.
365-121

	NAME	SIGN	DATE	NO.OF VAR.
DRN	V.ARUMUGAM			
CHD	K.SRIDHARAN			
APPD	S.NATARAJAN			

DEPT	CODE	SCALE	WEIGHT (KG).	REFERENCE INFORMATIONS	NO. OF ITEMS
VL	330	NTS	0.194	M 149291	

TITLE	CARD CODE	DRAWING NO.	REV
WORM SHAFT	U 01	3-20-201-00151	08

REV	DATE	ALTERED
08	11.06.01	CHD & APPD

DRG.UPDATED AND REDRAWN.

DCN: SB: 1298

CAUTION: The information on this document is the property of BHARAT HEAVY ELECTRICALS LTD. It must not be used directly or indirectly in any way detrimental to the interest of the company.

Size A3

DRAWING NO. 2-V-0000-15154

ALL DIMENSIONS ARE IN MILLIMETRES. FOR TOLERANCES OF UNTOLERANCED DIMENSIONS DURING MANUFACTURE REFER RELEVANT QCP / QP

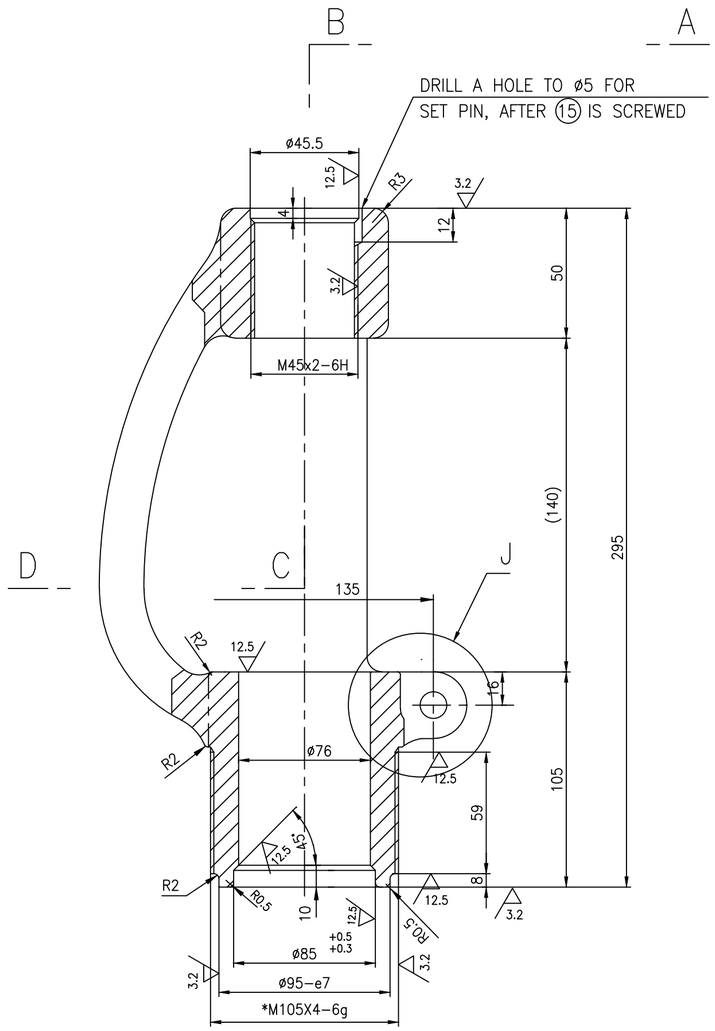

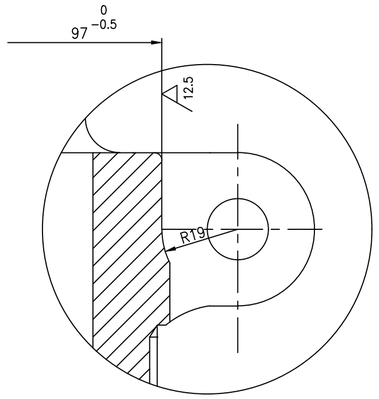

DETAIL-J

(12) 12.5 3.2

ø95-e7	-0.072
	-0.107

NOTES:

* 1. Ni PLATING TO A THICKNESS OF 25 TO 35 MICRONS.

2. LATEST APPLICABLE QUALITY WORK INSTRUCTION SHALL BE FOLLOWED IN ALL RESPECTS.

SECTION ABCD

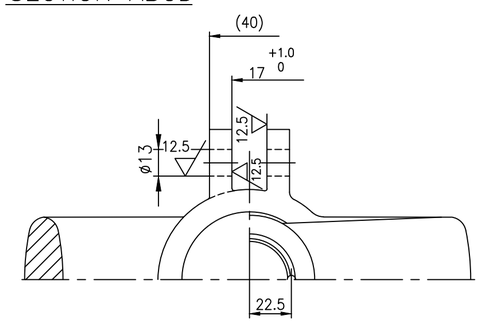

SL. NO.	DRAWING NO.	MATL. SPECN.	COMP. CODE	SCRAP SORT
02	2-V-G047-15154/4	A217 WC6, NT PRODUCT ATTEST	931121170000	20
01	2-V-G045-15154/4	A216 WCB, AN PRODUCT ATTEST	931121180000	10

No OFF	DESCRIPTION	MATL CODE	MATL SPECN	HEAT TREATMENT	SCRAP SORT	NET WT (kg)	GROSS WT (kg)	DRAWING No	ITEM No

TYPE OF PRODUCT OR NAME OF CUSTOMER/PROJECT

DWG. REDRAWN WITH REV. 04 ON 14.01.19

BHARAT HEAVY ELECTRICALS LTD.,
UNIT: HIGH PRESSURE BOILER PLANT.
TIRUCHIRAPALLI -620014.
365-120

	NAME	SIGN	DATE	NO.OF VAR.
DRN	CHITRANJAN		24.10.13	
CHD	S.SATHEES		24.10.13	
APPD	K.RAJASEKARAN		24.10.13	

DEPT VL | CODE 320 | SCALE N T S | WEIGHT (KG). 8.78 | REFERENCE INFORMATIONS | NO. OF ITEMS

TITLE: YOKE 80/1500CLASS | CARD CODE U 01 | DRAWING NO. 2-V-0000-15154 | REV 04

REV	DATE	ALTERED R.P.SINGH
04	14.01.19	CHD & APPD SSK & KRS
ZONE	DETAIL-J INCLUDED	
	DCP No. 802441	

CAUTION: The information on this document is the property of BHARAT HEAVY ELECTRICALS LTD. It must not be used directly or indirectly in any way detrimental to the interest of the company.

Size A2

DRAWING NO. 2-V-0000-14317

ALL DIMENSIONS ARE IN MILLIMETRES. FOR TOLERANCES OF UNTOLERANCED DIMENSIONS DURING MANUFACTURE REFER RELEVANT QCP / QP

SECTION-AA

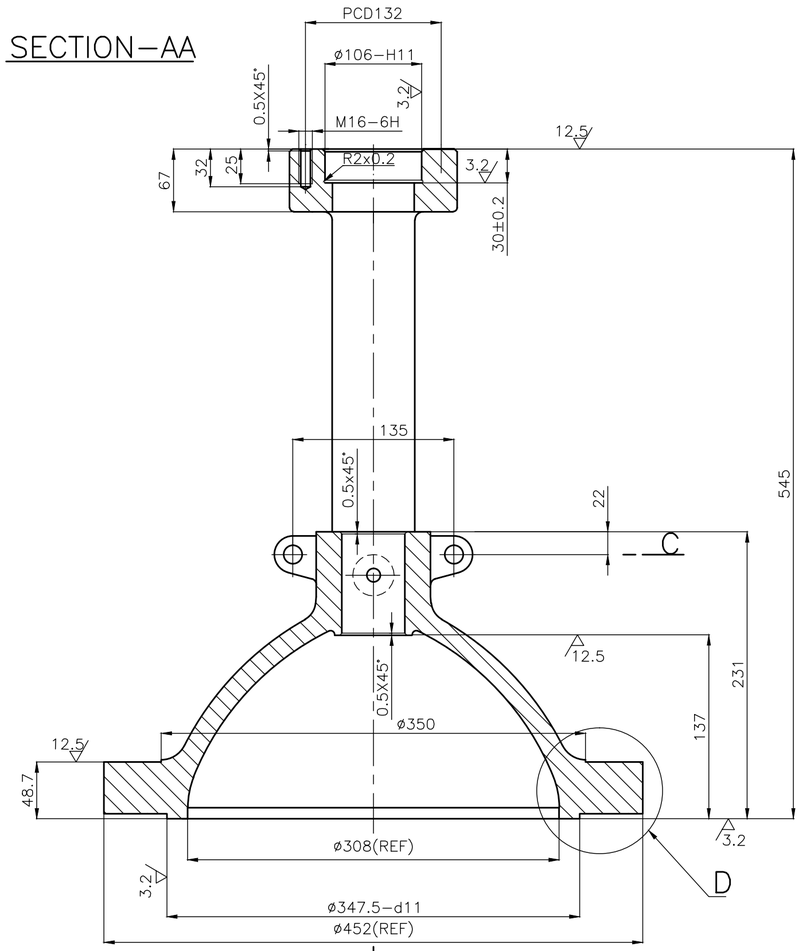

SECTION-BB

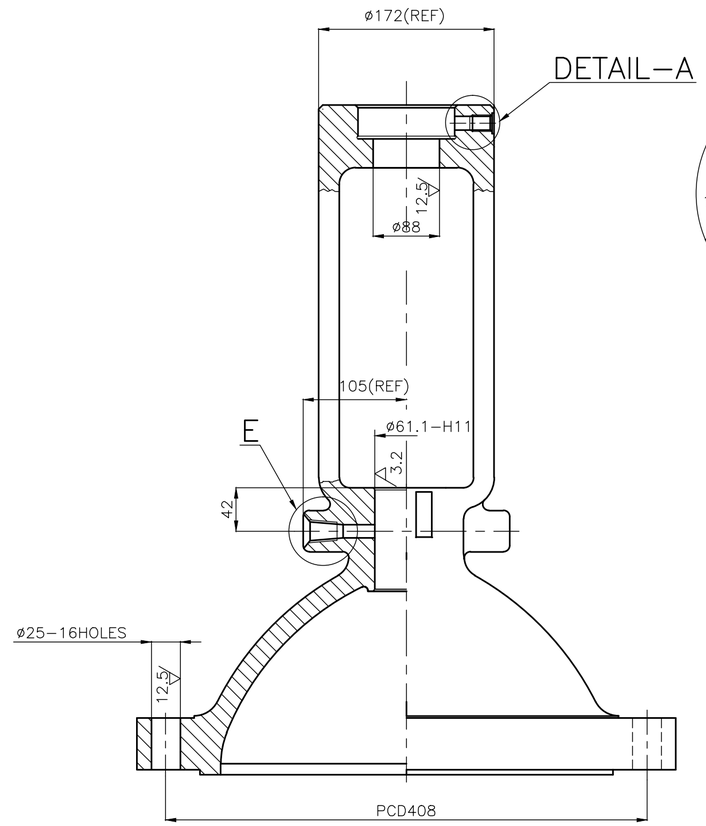

DETAIL-A

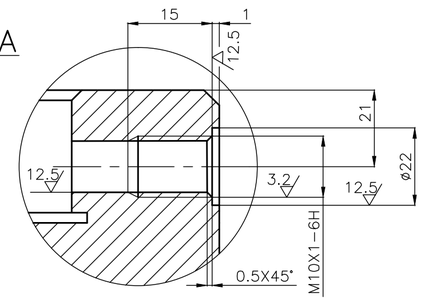

ø347.5-d11	-0.560
	-0.210
ø61.1-H11	+0.190
	0
ø106-H11	+0.220
	0

DETAIL-E

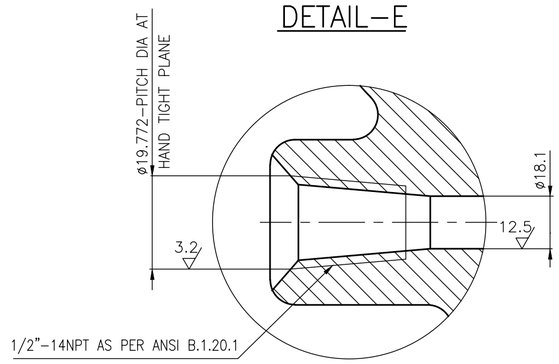

SECTION-CC

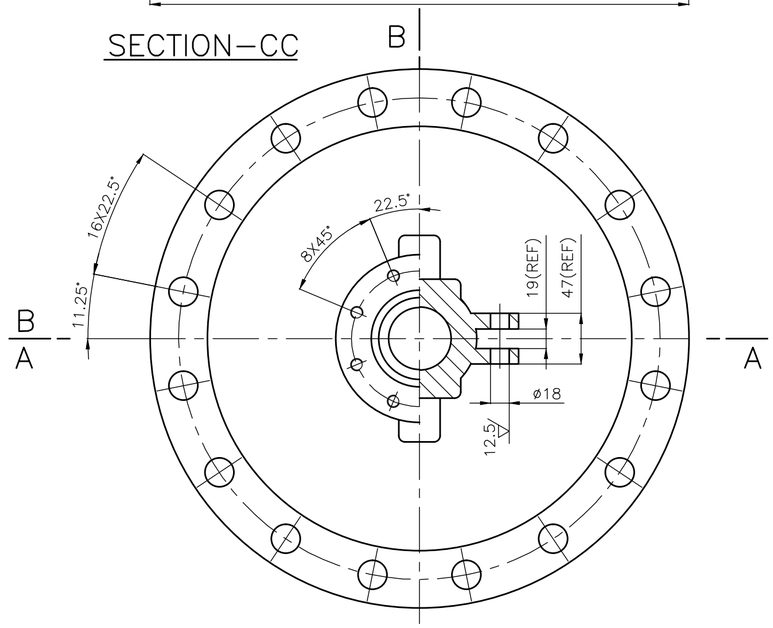

DETAIL-D

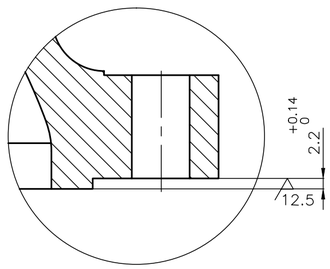

SL. No.	DESCRIPTION	MATL CODE	MATL SPECN	HEAT TREATMENT	SCRAP SORT	NET WT (kg)	GROSS WT (kg)	DRAWING No / COMP. CODE	ITEM No
01	--	92 201 606	A216 WCB CERTIFY	NR	10	66	75	2.V.NC31.14317/02 / 932012750000	06

TYPE OF PRODUCT OR NAME OF CUSTOMER/PROJECT: CS

BHARAT HEAVY ELECTRICALS LTD., UNIT: HIGH PRESSURE BOILER PLANT. TIRUCHIRAPALLI -620014.

	NAME	SIGN	DATE	NO.OF VAR.
DRN	A.S.PANDY		05.05.06	
CHD	T.R.RAMAMURTHY		05.05.06	
APPD	P.BOOMINATHAN		05.05.06	

365-120

DEPT: VL — CODE: 320 — SCALE: NTS — WEIGHT (KG): 66 — REFERENCE INFORMATIONS: CAD REF:C214317 — NO. OF ITEMS

TITLE: YOKE CUM BONNET (10-C300-GV-HW-SG) — CARD CODE: U 01 — DRAWING NO. 2-V-0000-14317 — REV 02

REV	DATE	ALTERED	REV	DATE	ALTERED
02	05.04.12	GANESH CHD & APPD M.RAJAKUMAR	01	02.08.08	T.R.RAMAMURTHY CHD & APPD P.BOOMINATHAN

SEALED GLAND THREAD 1/2-14NPT WAS 1/4-18NPT

DCP : 801317

ZONE

DRG. UPDATED.

CAUTION: The information on this document is the property of BHARAT HEAVY ELECTRICALS LTD. It must not be used directly or indirectly in any way detrimental to the interest of the company.

Size A2

DRAWING NO: 2-V-0000-05983

ALL DIMENSIONS ARE IN MILLIMETRES. FOR TOLERANCES OF UNTOLERANCED DIMENSIONS DURING MANUFACTURE REFER RELEVANT QCP / QP

SECTION-AA

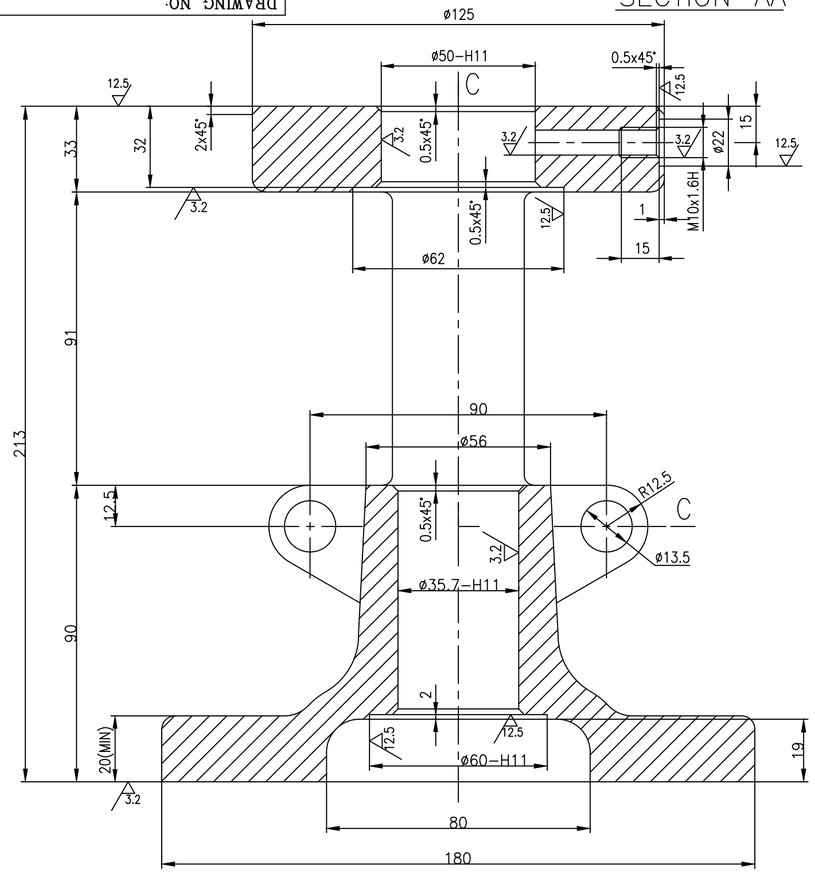

SECTION-BB

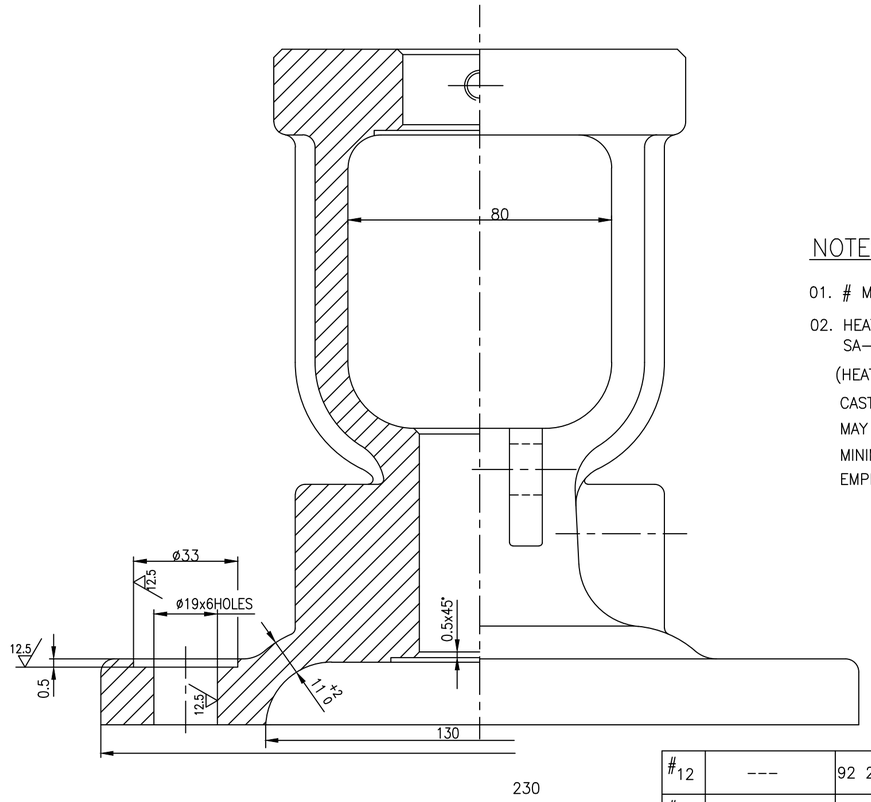

ø30-ø50 H11	+0.160 / 0
ø50-ø65 H11	+0.190 / 0

NOTES:-

01. # MARKED ITEMS IGC TEST SHALL BE CONDUCTED.

02. HEAT TREATMENT FOR SA995 CD3MN AS PER ASME STANDARD SA-995 TABLE 1

(HEAT TO 2050°F [1120°C] MINIMUM FOR SUFFICIENT TIME TO HEAT CASTING UNIFORMLY TO TEMPERATURE AND WATER QUENCH, OR THE CASTING MAY BE FURNACE COOLED TO 1850°F [1010°C] MINIMUM, HOLD FOR 15 MIN MINIMUM AND THEN WATER QUENCH. A RAPID COOL BY OTHER MEANS MAY BE EMPLOYED IN LIEU OF WATER QUENCH.)

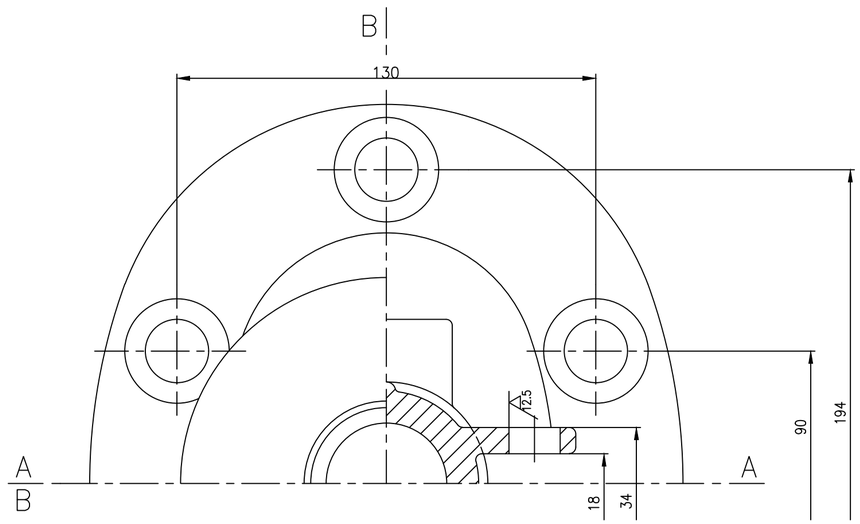

No OFF	DESCRIPTION	MATL CODE	MATL SPECN	HEAT TREATMENT	SCRAP SORT	NET WT (kg)	GROSS WT (kg)	DRAWING No. / COMP. CODE	ITEM No
#12	---	92 206 246	A351 CF3M CERTIFY	SH	46	11.0	12.7	2.V.UB23.05983 / 93 206 313 0000	06
#11	---	92 206 136	A351 CF8M CERTIFY	SH	46	11.0	12.7	2.V.UA97.05983 / 93 206 062 0000	06
10	---	92 203 857	SA995 Gr.CD3MN CERTIFY	REFER NOTE	46	11.0	12.7	2.V.NK66.05983 / 93 205 295 0000	06
09	---	92 203 847	A351 CF3M CERTIFY	SH	46	11.0	12.7	2.V.NK61.05983 / 93 205 262 0000	06
# 08	---	92 203 552	A351 CF8 CERTIFY	SH	46	11.0	12.7	2.V.U635.05983 / 93 204 579 0000	06
07	---	92 200 896	A352 LCB CERTIFY	NR	10	11.0	12.7	2.V.M768.05983 / 93 108 192 0000	06
06	---	92 200 590	A351 CF8M CERTIFY	SH	46	11.0	12.7	2.V.N338.05983 / 93 107 819 0000	06
05	---	92 200 589	A351 CF8 CERTIFY	SH	46	11.0	12.7	2.V.N286.05983 / 93 107 818 0000	06
04	---	92 200 588	A217 WC9 CERTIFY	N & T	20	11.0	12.7	2.V.N292.05983/01 / 93 107 090 0000	06
03	---	92 200 587	A217 WC6 CERTIFY	N & T	20	11.0	12.7	2.V.N291.05983/01 / 93 107 089 0000	06
02	---	92 200 586	A216 WCC CERTIFY	NORMALISED	10	11.0	12.7	2.V.N290.05983/01 / 93 107 088 0000	06
01	---	92 200 360	A216 WCB CERTIFY	NORMALISED	10	11.0	12.7	2.V.N289.05983 / 93 106 014 0000	06

DCP No.	ALTD:	APPD:	REV	ZONE	
–	RPS / MK	SSK / 10.11.22	08	–	SL. No. 12 INCLUDED.
–	TS / RPS	SSK / 11.10.21	07	–	SL. No. 11 INCLUDED. WEIGHT UPDATED.

CAUTION: The information on this document is the property of BHARAT HEAVY ELECTRICALS LTD. It must not be used directly or indirectly in any way detrimental to the interest of the company.

TYPE OF PRODUCT OR NAME OF CUSTOMER/PROJECT

365-190 02.03.2021

BHARAT HEAVY ELECTRICALS LTD., UNIT: HIGH PRESSURE BOILER PLANT. TIRUCHIRAPALLI-620014.

	NAME	SIGN	DATE	NO.OF VAR.
DRN	K.P.LEON		06.05.99	–
CHD	N.DHANAPAL		06.05.99	
APPD	R.VASANTH		06.05.99	

DEPT: VL. CODE: 320. SCALE: NTS. WEIGHT (KG): --. REFERENCE INFORMATIONS: CAD REF: C205983. NO. OF ITEMS: –

TITLE: YOKE CUM BONNET (3"-150C GV). CARD CODE: U 01. DRAWING NO.: 2-V-0000-05983. REV: 08

Size A2

DRAWING NO. 2-V-0000-01777

ALL DIMENSIONS ARE IN MILLIMETRES. FOR TOLERANCES OF UNTOLERANCED DIMENSIONS DURING MANUFACTURE REFER RELEVANT QCP / QP

SECTION–AA

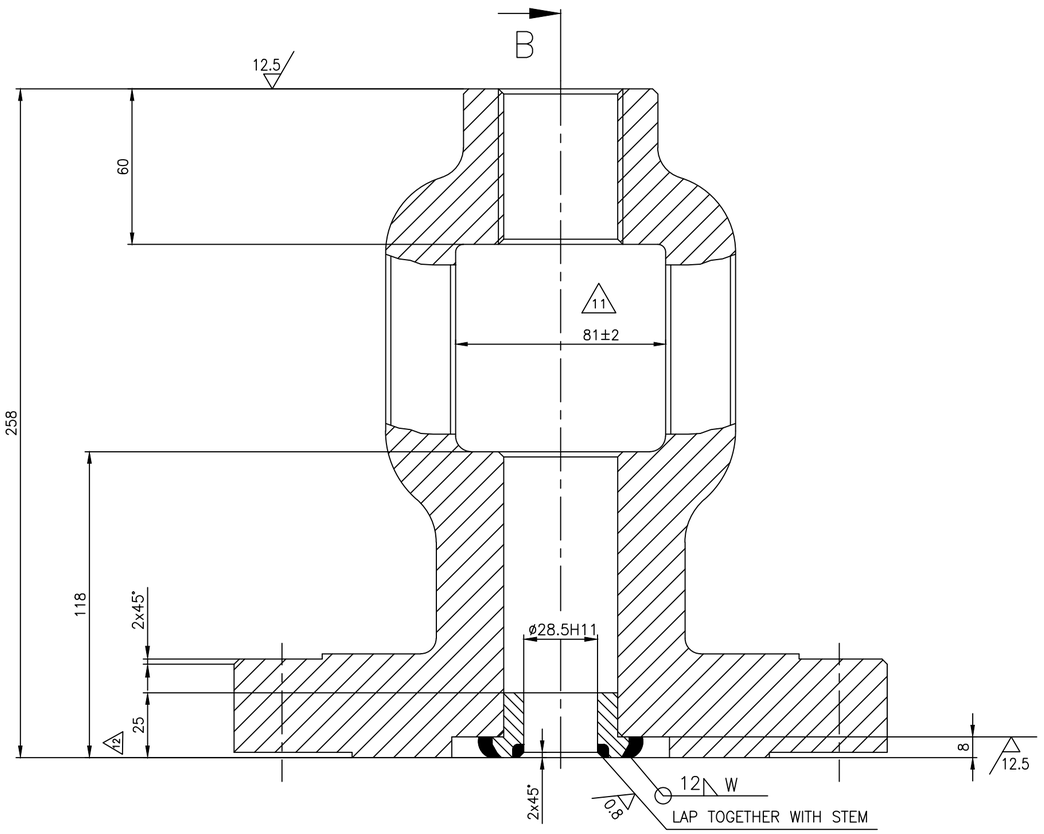

SECTION–BB

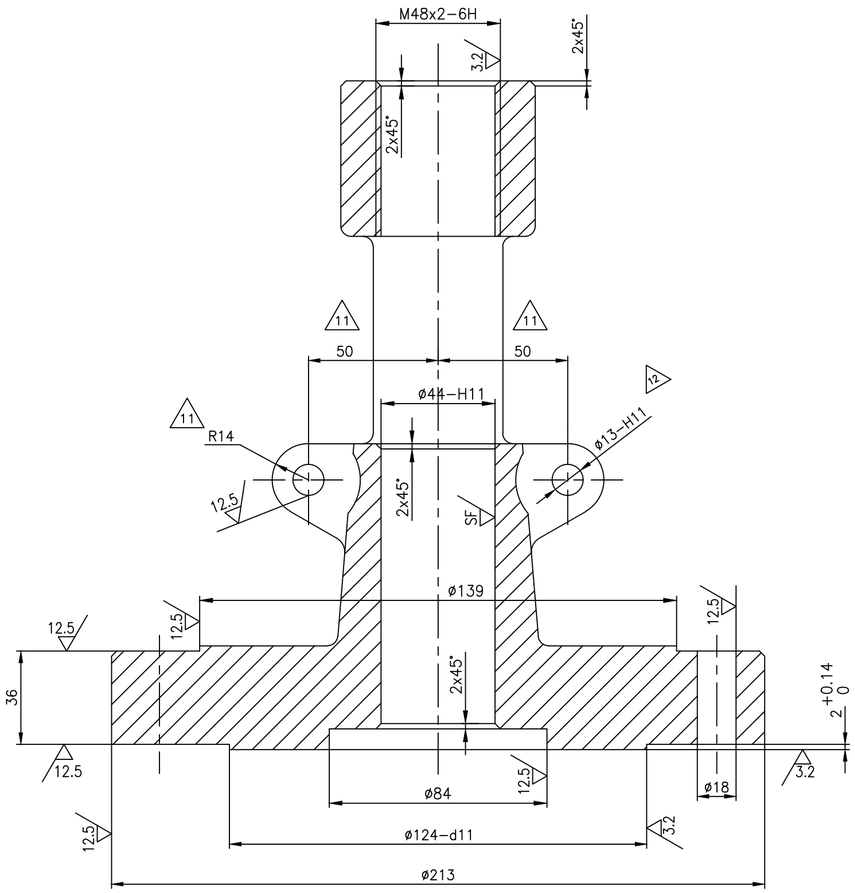

ø44–H11	+0.160 / 0
ø13–H11	+0.110 / 0
ø124–d11	−0.145 / −0.395
ø28.5–H11	+0.130 / 0

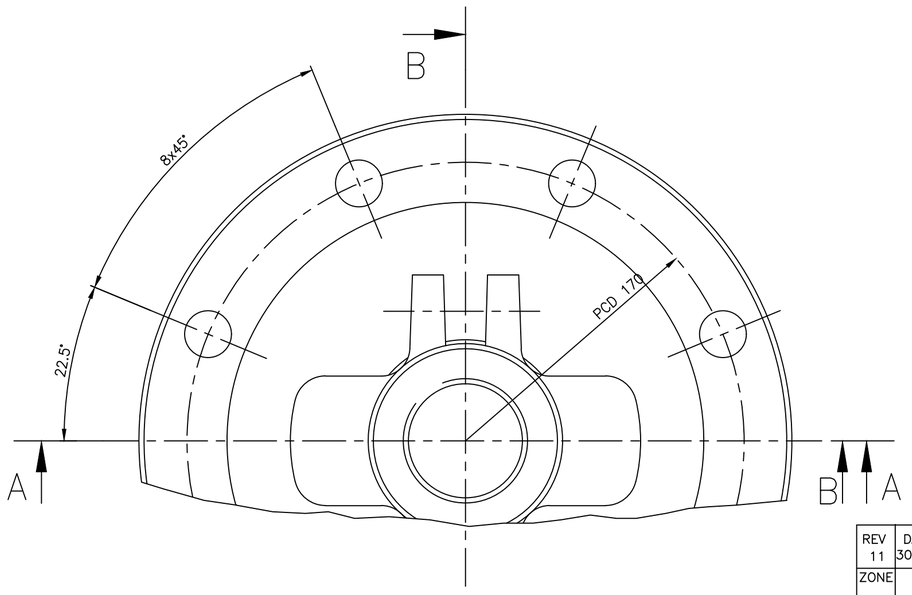

SL. No.	MATL CODE	GLAND BORE. FINISH–SF	W–WELD DETAIL	MATL SPECN	HEAT TREATMENT	SCRAP SORT	NET WT (kg)	GROSS WT (kg)	DRAWING No / COMP. CODE	ITEM No
06	92200062	3.2	E9018–B3	A217–WC9 CERTIFY	N & T	20	19.08	24.0	2.V.P481.01777/02 / 931309980000	08
05	92008208	3.2	E309	A216–WCB CERTIFY	NR	10	19.08	24.0	2.V.2981.01777/02 / 931072580000	08
04	92008208	3.2	E7018	A216–WCB CERTIFY	NR	10	19.08	24.0	2.V.M485.01777/02 / 931069510000	08
03	92008208	3.2	E309	A216–WCB CERTIFY	NR	10	19.08	24.0	2.V.2890.01777/02 / 931056590000	08
02	92008208	1.6	E7018	A216–WCB CERTIFY	NR	10	19.08	24.0	2.V.2685.01777/02 / 931054880000	08
01	92008208	3.2	E7018	A216–WCB CERTIFY	NR	10	19.08	24.0	2.V.2478.01777/07 / 930589730000	08

REV	DATE	ALTERED	
12	25.10.18	R.P.SINGH	CHD & APPD SSK & KRS

ZONE: Ø13–H11 WAS Ø12–H11
DIMN. 25 ADDED

REV	DATE	ALTERED	
11	30.12.11	T.R.RAMAMURTHY	CHD & APPD SSK & KRS

ZONE 11: DIMN.50 & R14 ADDED
DIMN.81±2 WAS 116±2
REFER DCP:–801267

REV	DATE	ALTERED	
10	19.12.06	A.S.PANDY	CHD & APPD P.BOOMINATHAN

ZONE: SL.No.06 INCLUDED

CAUTION: The information on this document is the property of BHARAT HEAVY ELECTRICALS LTD. It must not be used directly or indirectly in any way detrimental to the interest of the company.

TYPE OF PRODUCT OR NAME OF CUSTOMER/PROJECT

DRAWING REDRAWN WITH REV NO. 11 ON 30.12.2011 (REFER DCN: GV/0040)

BHARAT HEAVY ELECTRICALS LTD.,
UNIT: HIGH PRESSURE BOILER PLANT.
TIRUCHIRAPALLI -620014.
365–120

	NAME	SIGN	DATE	NO.OF VAR.
DRN	A.S.PANDY		19.12.06	
CHD	T.R.RAMAMURTHY		19.12.06	
APPD	P.BOOMINATHAN		19.12.06	

DEPT: VL
CODE: 320
SCALE: NTS
WEIGHT (KG): 19.08
REFERENCE INFORMATIONS: CAD REF: C201777
NO. OF ITEMS

TITLE: YOKE ASSY. (3"–300C)
CARD CODE: U 01
DRAWING NO.: 2–V–0000–01777
REV: 12

Size A2

DRAWING NO. 2-V-0000-13611

ALL DIMENSIONS ARE IN MILLIMETRES. FOR TOLERANCES OF UNTOLERANCED DIMENSIONS DURING MANUFACTURE REFER RELEVANT QCP / QP

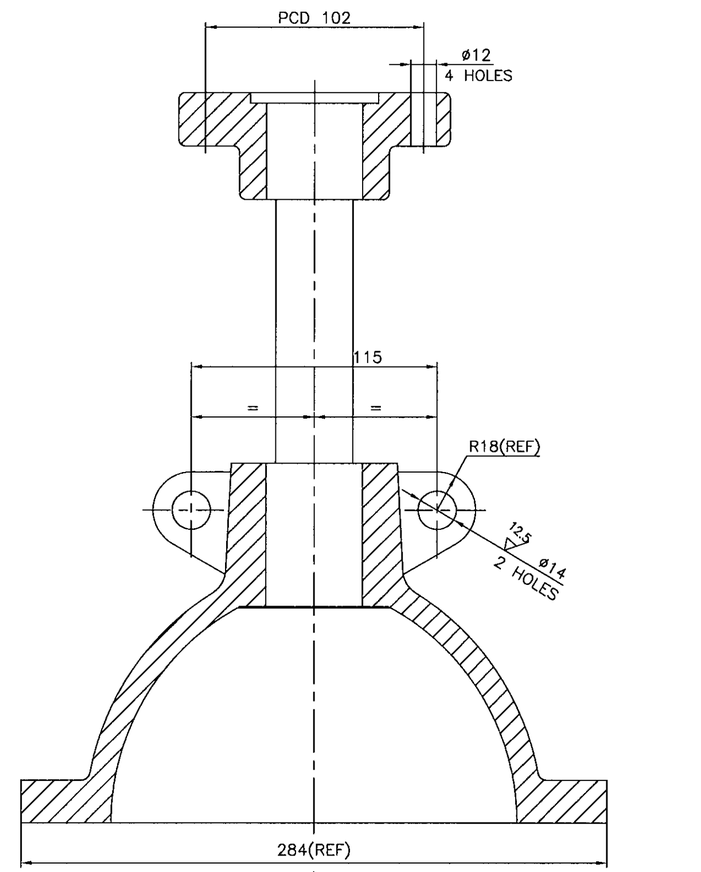

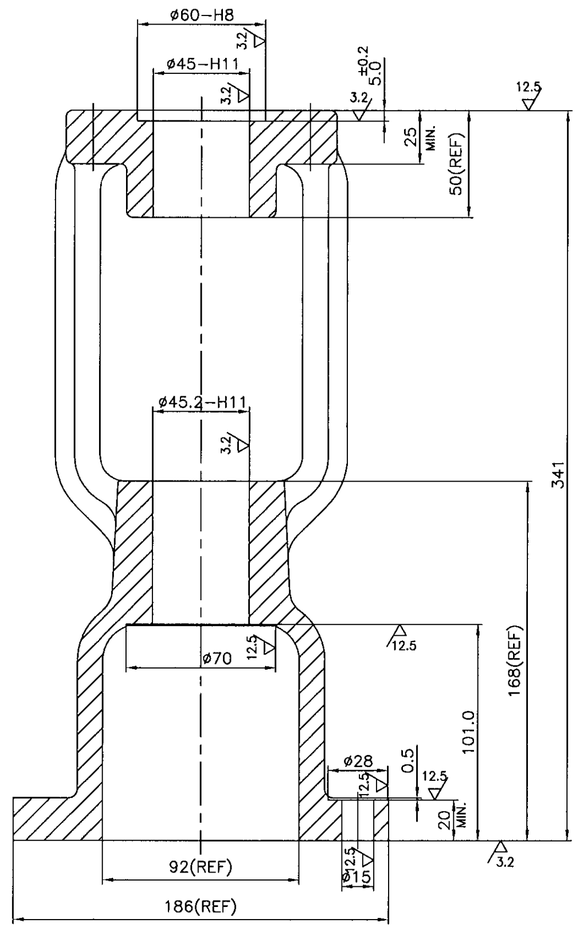

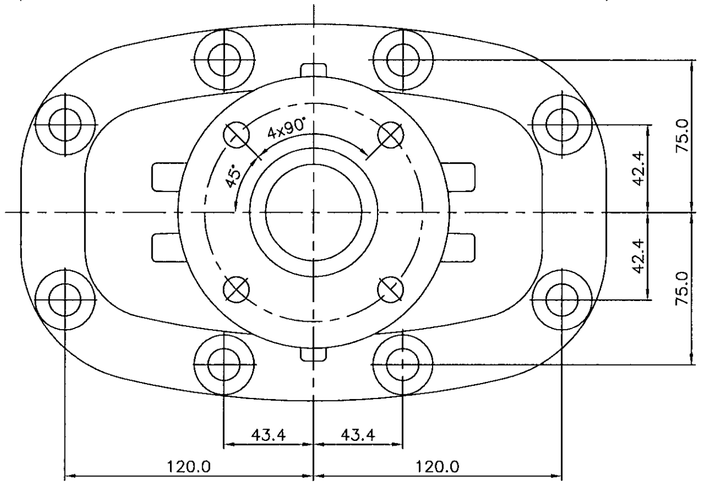

12.5 3.2

ø45.0 – H11	+0.160 / 0
ø45.2 – H11	+0.160 / 0
ø60 – H8	+0.190 / 0

NOTE

01. BREAK ALL SHARP CORNERS

SL No.	DESCRIPTION	MATL CODE	MATL SPECN	HEAT TREATMENT	SCRAP SORT	NET WT (kg)	GROSS WT (kg)	DRAWING No / COMPONENT CODE	ITEM No
01	CASTING	92 201 428	ASTM A216 WCB CERTIFY	NORMALISED	10	14.4	16.9	2.V.NC06.13611/02 / 93 110 783 0000	007

REV	DATE	ALTERED	REV	DATE	ALTERED
02	05.08.04	M.SRINIVASAN CHD & APPD K.S.RAMAN	01	15.03.04	M.SRINIVASAN CHD & APPD K.S.RAMAN
DCP:800351	DIMENSION 120.0 43.4, 75.0, 42.4 & 284(REF) WERE 116.3, 41.82, 75.7, 40.83 & 274(REF) RESPLY.		ZONE DCP:800297	DIMENSION 75.7 WAS 71.18	

CAUTION: The information on this document is the property of BHARAT HEAVY ELECTRICALS LTD. It must not be used directly or indirectly in any way detrimental to the interest of the company.

TYPE OF PRODUCT
OR NAME OF
CUSTOMER/PROJECT

BHARAT HEAVY ELECTRICALS LTD.,
UNIT: HIGH PRESSURE BOILER PLANT.
TIRUCHIRAPALLI -620014.

	NAME	SIGN	DATE	NO.OF VAR.
DRN	M.SRINIVASAN		15.03.04	
CHD	P.BOOMINATHAN		15.03.04	
APPD	K.S.RAMAN		15.03.04	

DEPT VL
CODE 320
SCALE NTS
WEIGHT (KG). 14.4
REFERENCE INFORMATIONS
CAD :C213611
NO. OF ITEMS

TITLE
YOKE CUM BONNET
6" – C150 – NSG

CARD CODE U 01

DRAWING NO. 2-V-0000-13611

REV 02

Size A2

CORPORATE DRG ID
TP-DG-3-20-201-00137

ALL DIMENSIONS ARE IN MILLIMETRES. FOR TOLERANCES OF UNTOLERANCED DIMENSIONS DURING MANUFACTURE REFER RELEVANT QCP / QP.

DRAWING NO. 3-20-201-00137

12.5 | 3.2 | 6.3

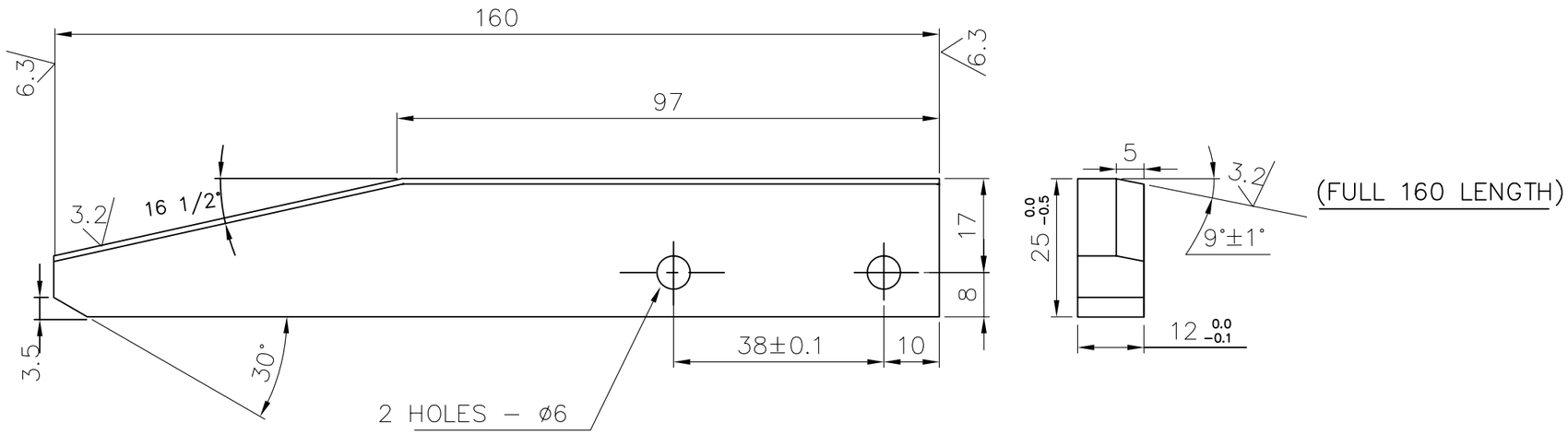

NOTE: –

1. HEAT TREATMENT TO 50–55 RC.
2. FOR QUALITY REQUIREMENTS REFER LATEST APPLICABLE QUALITY PROCEDURES.

PART CODE : 842020116000

NO OFF	DESCRIPTION	MATL CODE	MATL SPECN	HEAT TREATMENT	SCRAP SORT	NET WT (kg)	GROSS WT (kg)	DRAWING No	ITEM No
01	RAMP CAM	92 033 731	EN 24			0.71			

TYPE OF PRODUCT
OR NAME OF
CUSTOMER/PROJECT

BHARAT HEAVY ELECTRICALS LTD.,
UNIT: HIGH PRESSURE BOILER PLANT.
TIRUCHIRAPALLI-620014.
365-121

	NAME	SIGN	DATE	NO.OF VAR.
DRN	V.ARUMUGAM	V.A.	26.06.06	
CHD	K.SRIDHARAN	K.S.	26.06.06	
APPD	S.NATARAJAN	S.N.	26.06.06	

DEPT SB
CODE 330
SCALE NTS
WEIGHT (KG).
REFERENCE INFORMATIONS
NO. OF ITEMS

TITLE: RAMP CAM
CARD CODE: U 01
DRAWING NO. 3-20-201-00137
REV 06

REV	DATE	ALTERED	K.S.
06	26.06.06	CHD & APPD	S.N.

DRG. UPDATED AND REDRAWN.

DCN: SB: 800547 Dt. 02.01.06.

CAUTION: The information on this document is the property of BHARAT HEAVY ELECTRICALS LTD. It must not be used directly or indirectly in any way detrimental to the interest of the company.

Size A3

CORPORATE DRG ID
TP-DG-3-20-201-00137

ALL DIMENSIONS ARE IN MILLIMETRES. FOR TOLERANCES OF UNTOLERANCED DIMENSIONS DURING MANUFACTURE REFER RELEVANT QCP / QP.

DRAWING NO: 3-V-0000-35285

SL NO	DRAWING No	COMP.CODE	SUGG.SIZE	MATL. CODE	MATL. SPECN.	DIMENSIONS								WT. (Kg)	NET Wt (Kg)	APPLICABLE VALVES
						ød	ød1	ød2	øD	øD1	H2	H3	E°			
01	3-V-NC16-35285	932056644000	ø63x40	15339143	SA105, NR, CERTIFY	14	28	38	62	48.4	26	11	15°	0.97	0.3	8"/150 CL.
02	3-V-NP09-35285	932056654000	ø75x40	15339381		15	30	40	68	51.6	26	11	15°	1.4	0.4	10"/150 CL.
03	3-V-UA53-35285	932056974000	ø80x32	15339114		22	37.7	47.7	75	61.1	26	11	35°	1.26	0.6	12"/300 CL.
04	3-V-UA66-35285	932057194000	ø63x35	15339143		12	26	36	58	45.2	17	7	15°	0.86	0.15	6"/150 CL.
05	3-V-NL05-35285	932057214000	ø165x65	15339282		50	66.5	76.5	136	96	56	16	35°	10.9	2.0	28"/300 CL.
06	3-V-NQ29-35285	932058524000	ø63x35	15339379	SA182 F22 NT,Certify	12	26	36	58	45.2	17	7	15°	0.86	0.15	6"/150 CL.
07	3-V-NQ57-35285	932060214000	ø63x35	15339379	SA182 F22 NT,Certify	14	28	38	58	48.4	23	11	35°	0.76	0.26	6"/300 CL.

12.5 / 3.2

ø30-ø50 h11	0
	-0.160
ø50-ø80 h11	0
	-0.190
ø80-ø120 h11	0
	-0.220

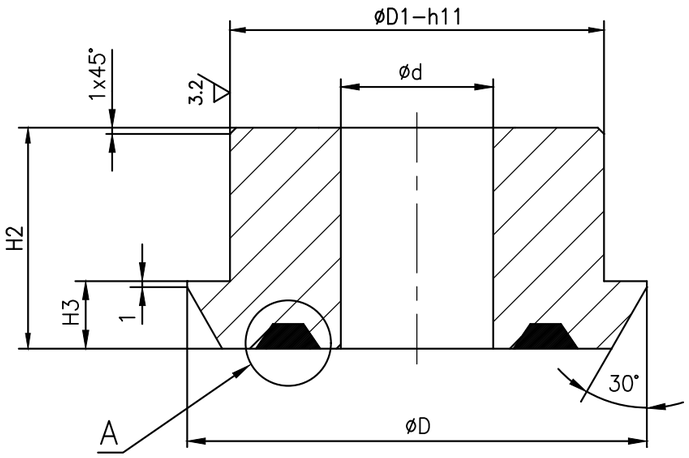

DETAIL-A

(DOTTED LINE INDICATES FINISHED COMPONENT PROFILE)

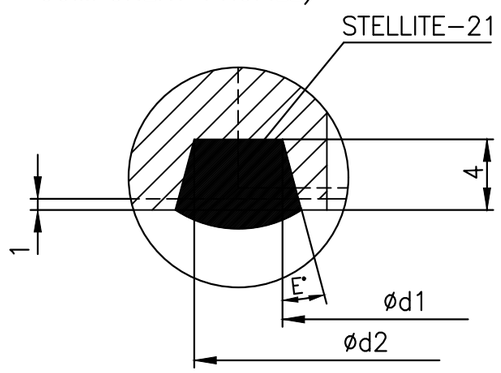

NO OF F	DESCRIPTION	MATL CODE	MATL SPECN	HEAT TREATMENT	SCRAP SORT	NET WT (kg)	GROSS WT (kg)	DRAWING No. / COMP. CODE	ITEM No
–	–	–	–	–	–	–	–	– / –	–

TYPE OF PRODUCT
OR NAME OF
CUSTOMER/PROJECT

BHARAT HEAVY ELECTRICALS LTD.,
UNIT: HIGH PRESSURE BOILER PLANT.
TIRUCHIRAPALLI-620014.

365-191
02.03.2021

	NAME	SIGN	DATE	NO.OF VAR.
DRN	R.P.SINGH		06.03.20	—
CHD	SAMEER BHAT		06.03.20	
APPD	S.SATHEES		06.03.20	

DEPT VL
CODE 320
SCALE NTS
WEIGHT (KG). ——
REFERENCE INFORMATIONS
NO. OF ITEMS —

TITLE: BACK SEAT ROUGH
CARD CODE U 01
DRAWING NO. 3-V-0000-35285
REV 02

CAUTION: The information on this document is the property of BHARAT HEAVY ELECTRICALS LTD. It must not be used directly or indirectly in any way detrimental to the interest of the company.

DCP No.	ALTD: RPS	APPD: SSK
–	CHD: SAB	DT: 20.07.21

REV 02 — SL. No. 07 INCLUDED — ZONE –

DCP No.	ALTD: S.MADHURAM	APPD: SSK
–	CHD: SSC	DT: 23.10.20

REV 01 — SL. No. 06 INCLUDED — ZONE –

Size A3

ALL DIMENSIONS ARE IN MILLIMETRES. FOR TOLERANCES OF UNTOLERANCED DIMENSIONS DURING MANUFACTURE REFER RELEVANT QCP / QP.

DRAWING NO. 3-V-0000-06879

SL. No.	DRAWING No.	COMP.CODE	MATL. SPECN.	SCRAP SORT	DIMENSIONS ØD	ØD1	ØD2	H1	H2	BUFFER LAYER	FINAL LAYER	STEM SIZE	NET Wt. (Kg)	APPLICABLE TYPE
01	3-V-N073-06879/5	93 104 019 0000	SA105, NORMALISED,CERTIFY	10	40	32.5	19.5	20	8	E430	E410	3/4"	0.10	2"-C150
02	3-V-N081-06879/5	93 104 020 0000			40	32.5	19.5	14	8	E430	E410	3/4"	0.08	2"-C300
03	3-V-N025-06879/5	93 104 021 0000			48	35.7	22.7	17	5	E430	E410	7/8"	0.15	3"-C150&300
04	3-V-N033-06879/5	93 104 022 0000			50	38.9	25.9	17	5	E430	E410	1"	0.16	4"-C150&300
05	3-V-N001-06879/5	93 104 023 0000			58	45.2	29.0	22	10	E430	E410	1 1/8"	0.25	6"-C150
06	3-V-N017-06879/5	93 104 024 0000			58	48.4	32.2	22	10	E430	E410	1 1/4"	0.22	6"-C300
07	3-V-N009-06879/5	93 104 025 0000			62	48.4	32.2	25	10	E430	E410	1 1/4"	0.32	8"-C150
08	3-V-N089-06879/5	93 104 026 0000			62	51.6	35.4	25	10	E430	E410	1 3/8"	0.30	8"-C300
09	3-V-N057-06879/5	93 104 027 0000			70	51.6	35.4	25	10	E430	E410	1 3/8"	0.38	10"-C150
10	3-V-N041-06879/6	93 104 028 0000			70	57.9	38.6	25	10	E430	E410	1 1/2"	0.55	12"-C150
11	3-V-N065-06879/6	93 104 029 0000			70	61.1	41.7	25	10	E430	E410	1 5/8"	0.50	10"-C300
12	3-V-N105-06879/6	93 104 030 0000			75	61.1	41.7	35	10	E430	E410	1 5/8"	0.60	12"-C300 & 14"-150
13	3-V-N224-06879/3	93 105 025 0000			85	73.8	51.3	37	12	E430	E410	2"	0.75	20"-C150
14	3-V-N350-06879/1	93 106 862 0000			78	64.3	44.9	35	10	E430	E410	1 3/4"	0.58	16"-C150 & 14"-300
15	3-V-N361-06879/1	93 106 878 0000			95	83.3	57.7	40	12	E430	E410	2 1/4"	1.1	24"-C150
16	3-V-N436-06879/1	93 107 145 0000			82	67.5	48.1	37	12	E430	E410	1 7/8"	0.8	16"-C300
17	3-V-N437-06879/1	93 107 146 0000			92	77	54.5	37	12	E430	E410	2 1/8"	0.9	20"-C300
18	3-V-K795-06879/1	93 107 984 0000			75	61.1	41.7	33	10	E430	E410	1 5/8"	0.58	14"-C150
19	3-V-K796-06879/1	93 107 985 0000			78	64.3	44.9	38	10	E430	E410	1 3/4"	0.62	16"-C150
20	3-V-K820-06879/1	93 107 986 0000			85	73.8	51.3	30	12	E430	E410	2"	0.68	20"-C150
21	3-V-K821-06879/1	93 107 987 0000			95	83.3	57.7	52	12	E430	E410	2 1/4"	1.4	24"-C150
22	3-V-N598-06879/1	93 107 988 0000			78	64.3	44.9	27	10	E430	E410	1 3/4"	0.42	14"-C300
23	3-V-K797-06879/1	93 107 989 0000			82	67.5	48.1	40	12	E430	E410	1 7/8"	1.0	16"-C300
24	3-V-K822-06879/1	93 107 990 0000			92	77	54.5	51	12	E430	E410	2 1/8"	1.4	20"-C300
25	3-V-N834-06879/1	93 109 739 0000			100	86.5	60.8	40	15	E430	E410	2 3/8"	1.3	26"-C150
26	3-V-N847-06879/1	93 109 740 0000			105	89.7	64.0	40	15	E430	E410	2 1/2"	1.3	28"-C150
27	3-V-N848-06879/1	93 109 741 0000			112	96.0	70.3	40	15	E430	E410	2 3/4"	1.5	30"-C150
28	3-V-N827-06879/1	93 109 742 0000			122	105.6	76.7	40	15	E430	E410	3"	1.75	32"-C150
29	3-V-N846-06879/1	93 109 743 0000			138	121.4	83.1	40	15	E430	E410	3 1/4"	2.25	36"-C150
30	3-V-NC06-06879/1	93 110 803 0000			58	45.2	29	16	6	E430	E410	1 1/8"	0.14	6"-C150
31	3-V-NG86-06879/01	93 202 610 0000	ASTM A182 F91 NT, CERTIFY	20	78	64.3	44.9	27	10	E309	STELLITE.21	1 3/4"	0.42	14"-C300
32	3-V-NJ26-06879	93 203 553 0000			82	67.5	48.1	37	12	E309	STELLITE.21	1 7/8"	0.8	16"-C300

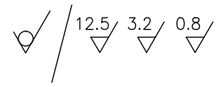

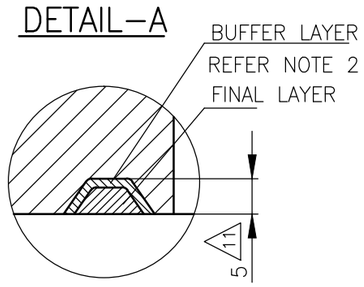

ø30-ø50 h11	0 / -0.160
ø50-ø80 h11	0 / -0.190
ø80-ø120 h11	0 / -0.220
ø120-ø180 h11	0 / -0.250

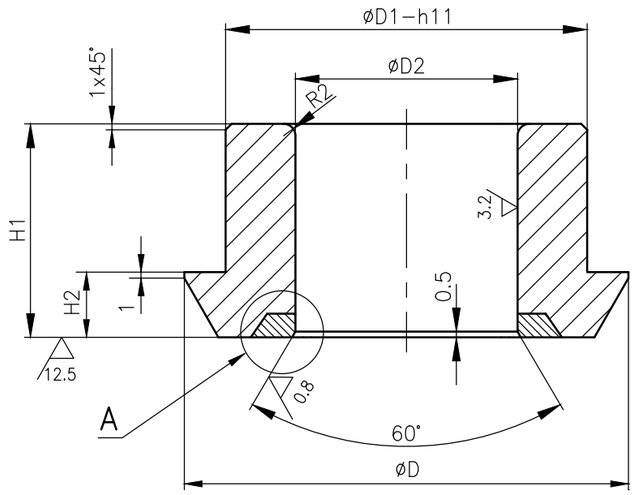

NOTES

1. HARDNESS OF WELD DEPOSIT 250BHN(MIN).
2. INITIAL BUFFER LAYER IS 2mm (APPROX.)
3. HARDNESS FOR STELLITE-21 = 20 HRC (MIN).

REV	DATE	ALTERED	
15	16.07.15	M.S.SELVAM	CHD & APPD MS & SSK

DRAWING No. 3-V-N834-06879
DIMENSION 100 WAS 102

DCP : 801963

REV	DATE	ALTERED	
14	25.09.14	A.MARIMUTHU	CHD & APPD MS & SSK

SL. No. 32 INCLUDED

REV	DATE	ALTERED	
13	01.08.13	M.S	CHD & APPD SSK & KRS

STELLITE-21 WAS STELLITE-6
NOTES UPDATED

DCP: 801568

CAUTION: The information on this document is the property of BHARAT HEAVY ELECTRICALS LTD. It must not be used directly or indirectly in any way detrimental to the interest of the company.

—	—	—	—	—	—	—	—	—	—
NO OF	DESCRIPTION	MATL CODE	MATL SPECN	HEAT TREATMENT	SCRAP SORT	NET WT (kg)	GROSS WT (kg)	DRAWING No	ITEM No

TYPE OF PRODUCT
OR NAME OF
CUSTOMER/PROJECT

DRG. REDRAWN WITH REV. 11 ON 07.04.05

draft BHEL 365-121

BHARAT HEAVY ELECTRICALS LTD.,
UNIT: HIGH PRESSURE BOILER PLANT.
TIRUCHIRAPALLI-620014.

	NAME	SIGN	DATE	NO.OF VAR.
DRN	V.BAIRAVAN		07.04.05	
CHD	R.L.NARAYANAN		07.04.05	
APPD	M.RJAKUMAR		07.04.05	

DEPT VL
CODE 320

SCALE NTS.

WEIGHT (KG). —

REFERENCE INFORMATIONS
CAD:C306879

NO. OF ITEMS

TITLE
BACK SEAT ASSEMBLY

CARD CODE U 01

DRAWING NO. 3-V-0000-06879

REV 15

Size A3

ALL DIMENSIONS ARE IN MILLIMETRES. FOR TOLERANCES OF UNTOLERANCED DIMENSIONS DURING MANUFACTURE REFER RELEVANT QCP / QP.

DRAWING NO. 3-V-0000-95510

SL. No.	DRAWING No.	COMP.CODE	MATL.SPECN.	SCRAP SORT	DIMENSIONS øD	øD1 h11	øD2 h11	H1	H2	øD3	øD4		ASSY. Wt. (Kg)	APPLICABLE VALVES
01	3-V-2479-95510/01	93 106 512 0000	SA 105 NORMALISED CERTIFY	10	54	44	28.5	25	8	37.5	22.5		0.21	3" & 4"-C300 SV RV
02	3-V-2480-95510/01	93 106 513 0000		10	62	52	36.5	35	10	45.5	30.5		0.32	6"-C300 SV RV
03	3-V-2670-95510/01	93 106 514 0000		10	74	64	44.5	43	12	53.5	38.5		0.58	8"-C300 SV RV
04	3-V-U251-95510/01	93 130 270 0000	A182-F316 SH,CERTIFY	46	62	52	36.5	35	10	45.5	30.5		0.32	6"-C300 SV RV
05	3-V-U377-95510/01	93 201 089 0000		46	54	44	28.5	25	8	37.5	22.5		0.21	3" & 4"-C300 SV RV

3.2 0.8

ø30-ø50 h11	0
	-0.160
ø50-ø80 h11	0
	-0.190
ø18-ø30 H11	+0.130
	0
ø30-ø50 H11	+0.160
	0

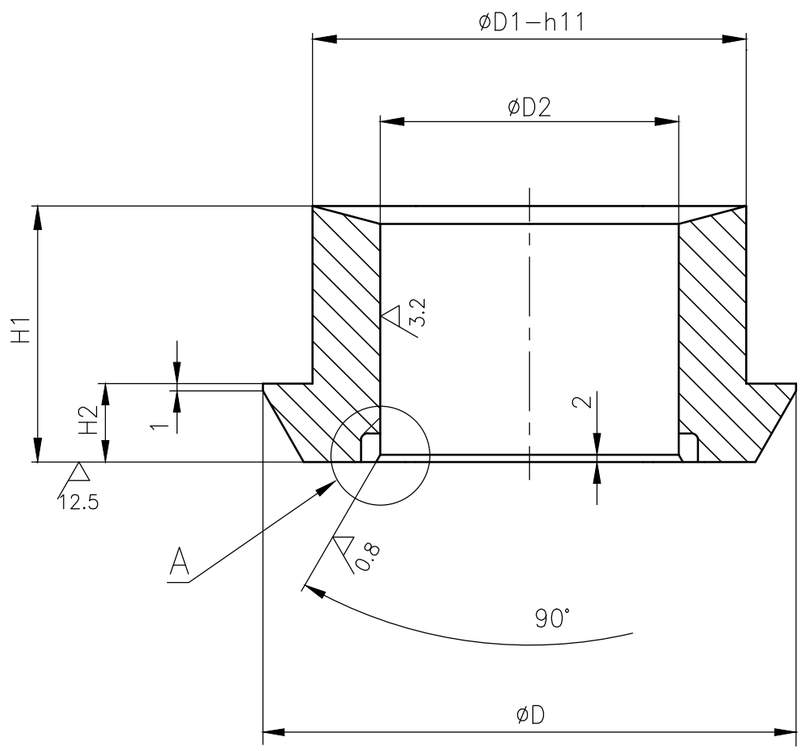

DETAIL-A

(DOTTED LINE INDICATES FINISHED COMPONENT PROFILE)

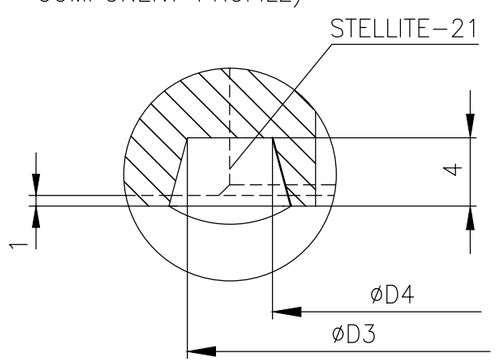

NOTE:-

1. HARDNESS FOR STELLITE-21 = 20 HRC (MIN).

NO OF	DESCRIPTION	MATL CODE	MATL SPECN	HEAT TREATMENT	SCRAP SORT	NET WT (kg)	GROSS WT (kg)	DRAWING No	ITEM No

TYPE OF PRODUCT OR NAME OF CUSTOMER/PROJECT: CS

DRG.REDRAWN WITH REV. 03 ON 03.04.2007 (REFER DCN. CS:0623)

BHARAT HEAVY ELECTRICALS LTD.
UNIT: HIGH PRESSURE BOILER PLANT.
TIRUCHIRAPALLI 620014.
365-121

	NAME	SIGN	DATE	NO.OF VAR.
DRN	A.S.PANDY		03.04.07	–
CHD	T.R.RAMAMURTHY		03.04.07	
APPD	P.BOOMINATHAN		03.04.07	

DEPT VL | CODE 320 | SCALE NTS. | WEIGHT (KG). – | REFERENCE INFORMATIONS CAD:C395510 | NO. OF ITEMS –

TITLE: BACK SEAT ASSY. (STELLITE SEAT)

CARD CODE: U 01

DRAWING NO. 3-V-0000-95510 | REV 04

REV	DATE	ALTERED	REV	DATE	ALTERED
04	01.08.13	M.S; CHD & APPD SSK & KRS	03	03.04.07	T.R.RAMAMURTHY; CHD & APPD P.BOOMINATHAN

STELLITE-21 WAS ECoCrA
NOTES UPDATED
DCP: 801568

SL. NUMBER 05 INCLUDED.

CAUTION: The information on this document is the property of BHARAT HEAVY ELECTRICALS LTD. It must not be used directly or indirectly in any way detrimental to the interest of the company.

Size A3

ALL DIMENSIONS ARE IN MILLIMETRES. FOR TOLERANCES OF UNTOLERANCED DIMENSIONS DURING MANUFACTURE REFER RELEVANT QCP / QP.

DRAWING NO: 3-V-0000-35286

SL. No.	DRAWING NO.	COMP.CODE	MATL.SPECN.	SCRAP SORT	DIMENSIONS														NET Wt.(kg)
					ØD	ØD1	ØD2	ØD3	ØD4	ØD5	ØD6	L	L1	L2	L3	L4	A°		
01	3-V-P804-35286	93 205 723 0000	ASTM A105 NR, CERTIFY	10	100	55.5	79.0	75.0	96	63.5	50.5	26.0	1.0	2.0	12.0	30	30		0.65
02	3-V-P947-35286	93 206 680 0000	ASTM A105 NR, CERTIFY	10	100	62.5	87	83	96	70	57	26.0	1.0	2.0	12.0	30	30		0.64

6.3 / 1.6 / 0.8

Ø79.0 – h11	0 / −0.185
Ø85.0–Ø110.0 h11	0 / −0.220

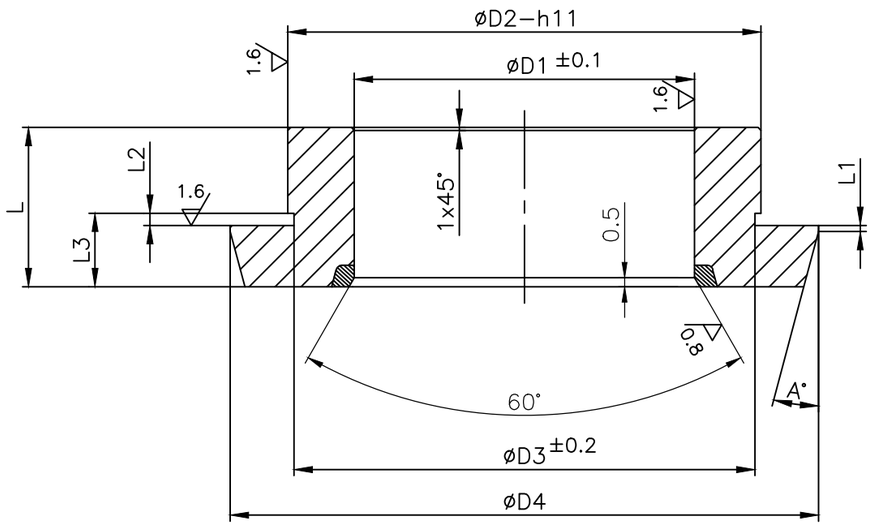

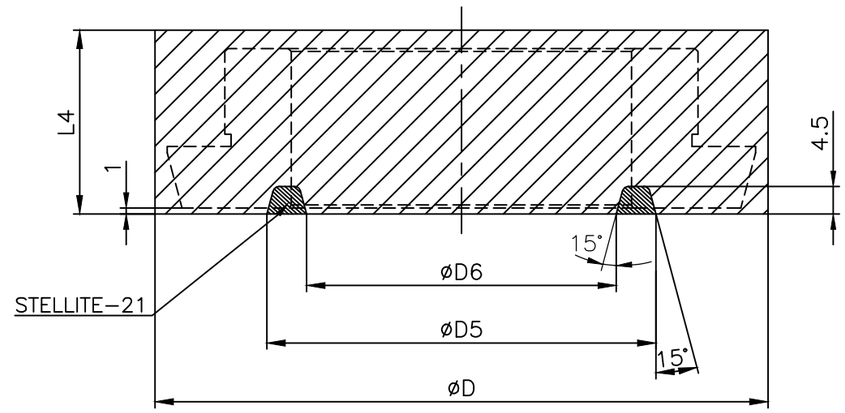

NOTE

01. DOTTED LINE INDICATES FINISHED MACHINED PROFILE.
02. BREAK ALL SHARP CORNERS.

NO OFF	DESCRIPTION	MATL CODE	MATL SPECN	HEAT TREATMENT	SCRAP SORT	NET WT (kg)	GROSS WT (kg)	DRAWING No. / COMP. CODE	ITEM No
–	–	–	–	–	–	–	–	– / –	–

TYPE OF PRODUCT
OR NAME OF
CUSTOMER/PROJECT

BHARAT HEAVY ELECTRICALS LTD.,
UNIT: HIGH PRESSURE BOILER PLANT.
TIRUCHIRAPALLI–620014.
365–191
02.03.2021

	NAME	SIGN	DATE	NO.OF VAR.
DRN	R.P.SINGH		09.03.20	—
CHD	SAMEER BHAT		09.03.20	
APPD	S.SATHEES		09.03.20	

DCP No.	ALTD: TS	APPD: MK
–	CHD: RPS	DT: 27.07.24

REV 01 — SL. NO. 02 INCLUDED.
ZONE –

CAUTION: The information on this document is the property of BHARAT HEAVY ELECTRICALS LTD. It must not be used directly or indirectly in any way detrimental to the interest of the company.

DEPT	SCALE	WEIGHT (KG).	REFERENCE INFORMATIONS	NO. OF ITEMS
VL	NTS	REF.TABLE		—
CODE 320				

TITLE	CARD CODE	DRAWING NO.	REV
BACK SEAT ASSY.	U 01	3–V–0000–35286	01

Size A3

ALL DIMENSIONS ARE IN MILLIMETRES. FOR TOLERANCES OF UNTOLERANCED DIMENSIONS DURING MANUFACTURE REFER RELEVANT QCP / QP.

DRAWING NO. 3-V-0000-17561

SL. No.	DRAWING No.	COMPONENT CODE	RAW MATERIAL DETAILS				SEATING DETAILS			SCRAP SORT	DIMENSIONS						WT. IN Kgs.
			S/F COMP. CODE	SPECN.	HEAT TREAT.	WT. (Kgs)	SPECN.	NET WT. (Kgs)	GRO. WT. (Kgs)		øD	øD1	øD2	ød	H	A	
01.	3-V-F501-17561/01	93 166 862 0000	93 166 862 5000	ASTM A105	NR	0.19	STELLITE-21	0.007	0.012	10	32.5	40.0	30.5	19.5	20.0	8.0	0.14
02.	3-V-F531-17561/01	93 166 863 0000	93 166 863 5000	A182-F22	NT	0.19	STELLITE-21	0.007	0.012	20							
03.	3-V-F502-17561/01	93 166 864 0000	93 166 864 5000	ASTM A105	NR	0.22	STELLITE-21	0.009	0.016	10	38.9	50.0	36.9	25.9	20.0	8.0	0.15
04.	3-V-F532-17561/01	93 166 865 0000	93 166 865 5000	A182-F22	NT	0.22	STELLITE-21	0.009	0.016	20							
05.	3-V-F921-17561/01	93 203 194 0000	93 203 194 5000	A182-F316	SH	0.22	STELLITE-21	0.009	0.016	46							
06.	3-V-F503-17561/01	93 166 866 0000	93 166 866 5000	ASTM A105	NR	0.36	STELLITE-21	0.010	0.018	10	45.2	58.0	43.2	29.1	25.0	10.0	0.26
07.	3-V-F533-17561/01	93 166 867 0000	93 166 867 5000	A182-F22	NT	0.36	STELLITE-21	0.010	0.018	20							
08.	3-V-F913-17561	93 203 984 0000	93 203 984 5000	A182-F316	SH	0.36	STELLITE-21	0.010	0.018	46							
09.	3-V-F504-17561/01	93 166 868 0000	93 166 868 5000	ASTM A105	NR	0.51	STELLITE-21	0.012	0.022	10	57.9	70.0	55.9	38.6	25.0	10.0	0.38
10.	3-V-F534-17561/01	93 166 869 0000	93 166 869 5000	A182-F22	NT	0.51	STELLITE-21	0.012	0.022	20							
11.	3-V-F528-17561	93 204 008 0000	93 204 008 5000	A182-F316	SH	0.51	STELLITE-21	0.012	0.022	46							
12.	3-V-F505-17561/01	93 166 870 0000	93 166 870 5000	ASTM A105	NR	0.58	STELLITE-21	0.014	0.024	10	61.1	75.0	59.1	41.8	25.0	10.0	0.42
13.	3-V-F535-17561/01	93 166 871 0000	93 166 871 5000	A182-F22	NT	0.58	STELLITE-21	0.014	0.024	20							
14.	3-V-F889-17561/01	93 202 267 0000	93 202 267 5000	A182-F316	SH	0.58	STELLITE-21	0.014	0.024	46							
15.	3-V-F506-17561/01	93 166 872 0000	93 166 872 5000	ASTM A105	NR	0.62	STELLITE-21	0.016	0.030	10	67.5	80.0	65.5	48.1	25.0	10.0	0.45
16.	3-V-F536-17561/01	93 166 873 0000	93 166 873 5000	A182-F22	NT	0.62	STELLITE-21	0.016	0.030	20							
17.	3-V-U556-17561	93 203 863 0000	93 203 863 5000	A182-F316	SH	0.62	STELLITE-21	0.016	0.030	46							
18.	3-V-F507-17561/01	93 166 874 0000	93 166 874 5000	ASTM A105	NR	0.97	STELLITE-21	0.018	0.032	10	73.8	85.0	71.8	51.3	35.0	12.0	0.73
19.	3-V-F537-17561/01	93 166 875 0000	93 166 875 5000	A182-F22	NT	0.97	STELLITE-21	0.018	0.032	20							
20.	3-V-F510-17561/01	93 201 591 0000	93 201 591 5000	A182-F316	SH	0.97	STELLITE-21	0.018	0.032	46							
21.	3-V-NJ74-17561	93 204 048 0000	93 204 048 5000	A182-F22	NT	1.01	STELLITE-21	0.016	0.032	20	96.0	118.5	93.0	70.5	30.0	10.0	1.01

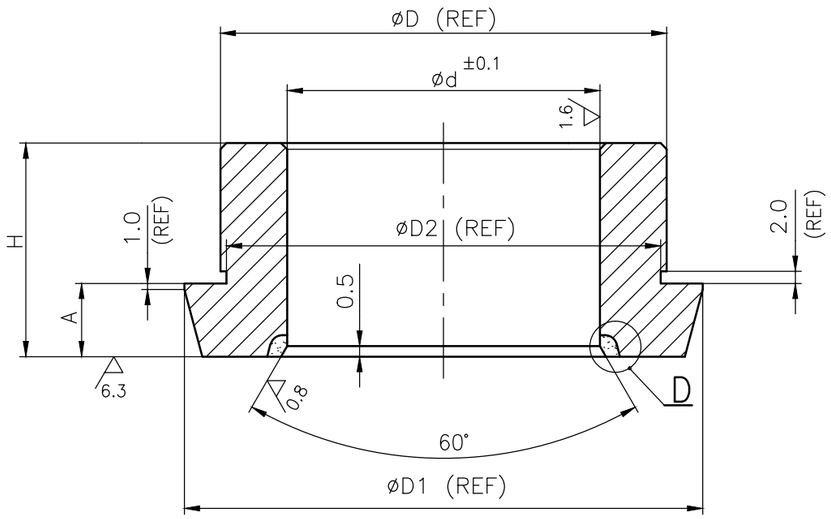

DETAIL – D

(AFTER HARDFACING)

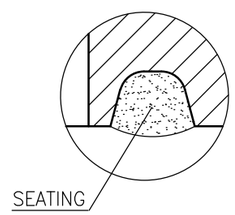

NOTE

01. HARDNESS FOR STELLITE-21 = 20 HRC (MIN.)

–	–	–	–	–	–	–	–	–	–
NO OFF	DESCRIPTION	MATL CODE	MATL SPECN	HEAT TREATMENT	SCRAP SORT	NET WT (kg)	GROSS WT (kg)	DRAWING No	ITEM No

TYPE OF PRODUCT OR NAME OF CUSTOMER/PROJECT: CS

BHARAT HEAVY ELECTRICALS LTD.
UNIT: HIGH PRESSURE BOILER PLANT.
TIRUCHIRAPALLI – 620014.
365-121

	NAME	SIGN	DATE	NO.OF VAR.
DRN	M.SRINIVASAN		31.05.96	
CHD	R.MOHAN		01.06.96	
APPD	N.NAGARAJAN		01.06.96	

DEPT: VL
CODE: 320
SCALE: NTS
WEIGHT (KG): REF.
REFERENCE INFORMATIONS: CAD :C317561
NO. OF ITEMS

TITLE: BACK SEAT ASSY
CARD CODE: U 01
DRAWING NO.: 3-V-0000-17561
REV: 08

REV	DATE	ALTERED		REV	DATE	ALTERED	
08	17.06.16	CHD & APPD	K.NAVIN MS & SSK	07	24.02.16	CHD & APPD	A.AMALA MS & SSK
DRG.No. 3-V-NJ74-17561 INCLUDED				DRG.Nos. 3-V-F913-17561 AND 3-V-F528-17561 INCLUDED			

CAUTION: The information on this document is the property of BHARAT HEAVY ELECTRICALS LTD. It must not be used directly or indirectly in any way detrimental to the interest of the company.

Size A3

ALL DIMENSIONS ARE IN MILLIMETRES. FOR TOLERANCES OF UNTOLERANCED DIMENSIONS DURING MANUFACTURE REFER RELEVANT QCP / QP.

DRAWING NO. 3-V-0000-23526

6.3 / 1.6 / 0.8

SL. No.	DRAWING NO.	COMP.CODE	MATL.SPECN.	SCRAP SORT	DIMENSIONS																		NET Wt.(kg)
					øD	øD1	øD2	øD3	øD4	øD5	øD6	øD7	øD8	L	L1	L2	L3	L4	L5	A°	BUFFER LAYER	FINAL LAYER	
01	3-V-P366-23526/3	93 130 620 0000	ASTM A105 CERTIFY NORMALISED	10	100	55.5	79.0	75.0	96	69	45	63.5	50.5	26.0	1.0	2.0	12.0	31	30	30	E430	E410	0.65
02	3-V-P560-23526/1	93 202 346 0000		10	100	62.5	87	83	96	75.5	51.5	70	57	26.0	1.0	2.0	12.0	31	30	30	E430	E410	0.64
03	3-V-NH51-23526/1	93 202 779 0000		10	125	70.5	96	93	118.5	83	59	77	65	30	1.0	2.0	12	34	34	30	E430	E410	1.1
04	3-V-NH50-23526/1	93 202 828 0000		10	125	76	106	102	121	87	65	81	71	30	1.0	2.0	13.0	34	34	30	E430	E410	1.2
05	3-V-NJ35-23526/1	93 203 641 0000	ASTM A182 F91 NT CERTIFY	20	125	70.5	96	93	118.5	83	59	77	65	30	1.0	2.0	12	34	34	30	E309	STELLITE-6	1.1
06	3-V-P763-23526	93 205 086 0000	ASTM A182 F316 SH, CERTIFY	46	100	62.5	87	83	96	75.5	51.5	70	57	26.0	1.0	2.0	12.0	31	30	30	E430	E410	0.64

ø79.0 – h11	0 / −0.185
ø85.0–ø110.0 h11	0 / −0.220

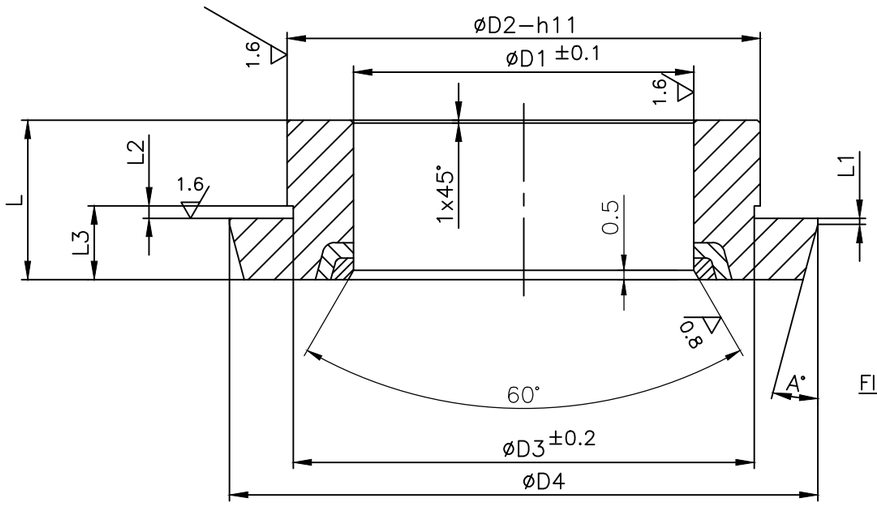

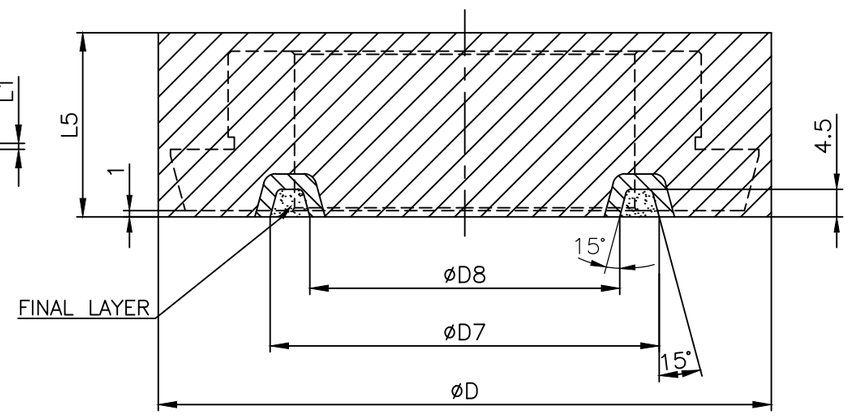

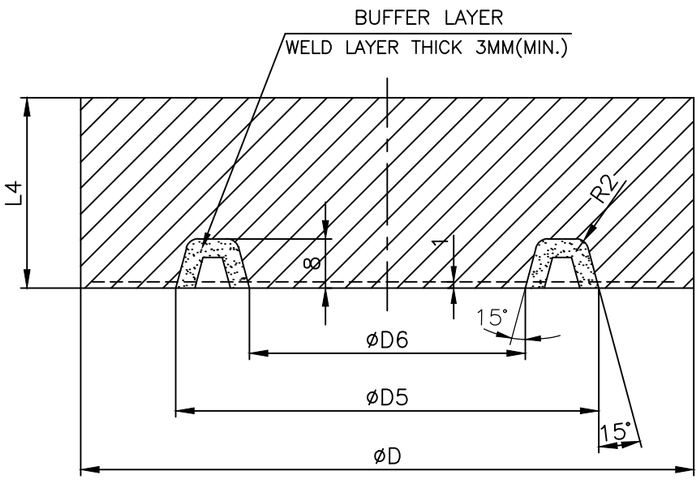

NOTE

01. DOTTED LINE INDICATES FINISHED MACHINED PROFILE.

02. BREAK ALL SHARP CORNERS.

NO OFF	DESCRIPTION	MATL CODE	MATL SPECN	HEAT TREATMENT	SCRAP SORT	NET WT (kg)	GROSS WT (kg)	DRAWING No	ITEM No
–	–	–	–	–	–	–	–	–	–

TYPE OF PRODUCT
OR NAME OF
CUSTOMER/PROJECT

BHARAT HEAVY ELECTRICALS LTD.,
UNIT: HIGH PRESSURE BOILER PLANT.
TIRUCHIRAPALLI-620014.
365-121

	NAME	SIGN	DATE	NO.OF VAR.
DRN	M.SRINIVASAN		29.08.05	
CHD	K.S.RAMAN		29.08.05	
APPD	K.S.RAMAN		29.08.05	

DEPT	SCALE	WEIGHT (KG).	REFERENCE INFORMATIONS	NO. OF ITEMS
VL	NTS	REF.TABLE	CAD :C323526	

CODE 320

TITLE	CARD CODE	DRAWING NO.	REV
BACK SEAT ASSY.	U 01	3-V-0000-23526	07

REV	DATE	ALTERED	
07	27.12.19	CHD & APPD	R.P.SINGH SAMEER & SSK
		SL. No. 06 INCLUDED	

CAUTION: The information on this document is the property of BHARAT HEAVY ELECTRICALS LTD. It must not be used directly or indirectly in any way detrimental to the interest of the company.

Size A3

ALL DIMENSIONS ARE IN MILLIMETRES. FOR TOLERANCES OF UNTOLERANCED DIMENSIONS DURING MANUFACTURE REFER RELEVANT QCP / QP.

DRAWING NO. CORPORATE DRG ID:TP-DG-3-V-0000-24097/00

12.5 / 3.2

ø50 −65 a11	−0.340
	−0.530

SL. No.	DRAWING No.	COMP. CODE	MATL. SPECN	MATL. SIZE	MATL. CODE	SCRAP SORT	GROSS WT(kg)	NET WT(kg)	DIMENSIONS						SIZE/RATING
									øD	øD1−a11	øD2	H	H1	ød	
01	3−V−NC10−24097	931300500000	SA 105 NR, CERTIFY	ø75X30	153393810000	40	1.04	0.25	66	51.6	42	22	15	35.2	10"/150CL

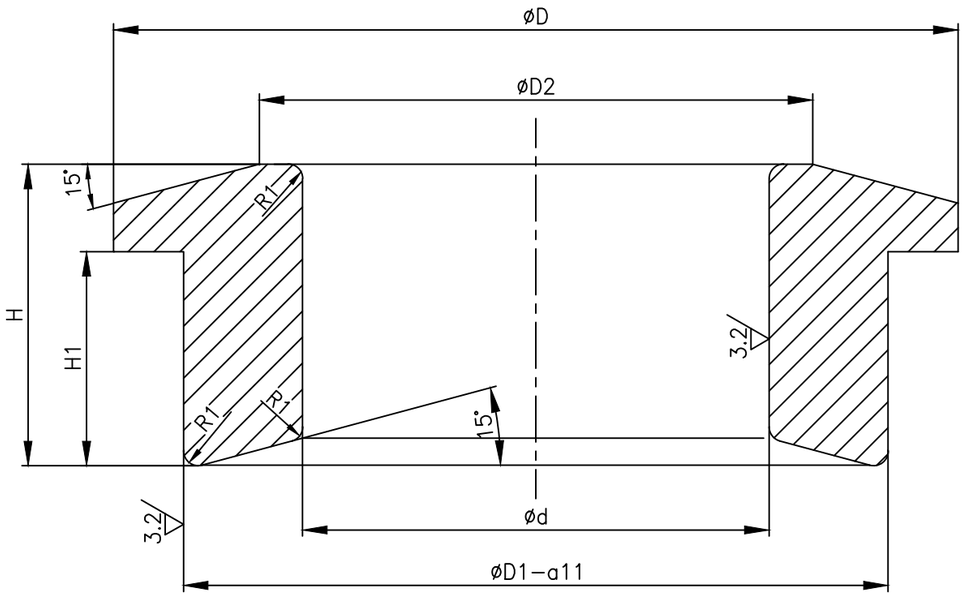

NOTE:−

01. UNSPECIFIED CORNERS TO BE ROUNDED OFF TO R0.5

NO OF	DESCRIPTION	MATL CODE	MATL SPECN	HEAT TREATMENT	SCRAP SORT	NET WT (kg)	GROSS WT (kg)	DRAWING No	ITEM No

TYPE OF PRODUCT
OR NAME OF
CUSTOMER/PROJECT

BHARAT HEAVY ELECTRICALS LTD.
UNIT: HIGH PRESSURE BOILER PLANT.
TIRUCHIRAPALLI _620014.
365−121

	NAME	SIGN	DATE	NO.OF VAR.
DRN	V.BAIRAVAN		27.10.03	
CHD	R.L.NARAYANAN		27.10.03	
APPD	M.RAJAKUMAR		27.10.03	

DEPT	SCALE	WEIGHT (KG).	REFERENCE INFORMATIONS	NO. OF ITEMS
VL	NTS.	—	CAD:C324097	

CODE 320

TITLE	CARD CODE	DRAWING NO.	REV
GLAND FOLLOWER	U 01	3−V−0000−24097	0

REV	DATE	ALTERED
		CHD & APPD

CAUTION: The information on this document is the property of BHARAT HEAVY ELECTRICALS LTD. It must not be used directly or indirectly in any way detrimental to the interest of the company.

Size A3

CORPORATE DRG ID:TP-DG-3-V-0000-24097/00

ALL DIMENSIONS ARE IN MILLIMETRES. FOR TOLERANCES OF UNTOLERANCED DIMENSIONS DURING MANUFACTURE REFER RELEVANT QCP / QP.

DRAWING NO: 3-V-0000-06882

SL. No.	DRAWING No.	COMP. CODE	MATL.SPECN.	SUGG. SIZE	GROSS WT	DIMENSIONS ØDS a11	ØD	ØD1	H	h	Ød	MATL. MARK *	SCRAP SORT	WEIGHT (Kgs)	REMARKS
01	3-V-N081-06882/01	931040310000	SA 105, NR, CERTIFY	ø43x25	0.285	32.5	38	22	21	15	19.35	SA105	10	0.09	2"/ 300 CL
02	3-V-N025-06882/01	931040320000		ø40x26	0.26	35.7	40	26	22	16	22.5	SA105		0.16	3"/150 & 300 CL
03	3-V-N033-06882/01	931040330000		ø50x30	0.46	38.9	48	28	26	20	25.7	SA105		0.19	4"/150 & 300 CL
04	3-V-N001-06882/01	931040340000		ø60x30	0.666	45.2	54	34	26	20	28.87	SA105		0.23	6"/150 CL
05	3-V-N017-06882/01	931040350000		ø60x30	0.666	48.4	54	34	26	20	32.05	SA105		0.29	6"/300 CL
06	3-V-N009-06882/01	931040360000		ø63x30	0.73	48.4	58	38	26	20	32.05	SA105		0.26	8"/150 CL
07	3-V-N089-06882/01	931040370000		ø63x30	0.73	51.6	58	38	26	20	35.22	SA105		0.30	8"/300 CL
08	3-V-N057-06882/01	931040380000		ø70x36	1.09	51.6	66	42	32	25	35.22	SA105		0.45	10"/150 CL
09.	3-V-N065-06882/01	931040390000		ø70x36	1.09	61.1	66	45	32	25	41.77	SA105		0.41	10"/300 CL
10	3-V-N041-06882/01	931040400000		ø70x36	1.09	57.9	66	42	32	25	38.6	SA105		0.53	12"/150 CL
11	3-V-N105-06882/02	931040410000		ø75x36	1.25	61.1	70	45	32	25	41.77	SA105		0.50	12"/300 CL 14"/150 CL
12	3-V-N224-06882	931050240000		ø80x36	1.4	73.8	80	54	32	25	51.3	SA105		0.67	20"/150 CL
13	3-V-N229-06882	931059340000	A276GR410 HT(CERTIFY)	ø63x30	0.666	48.4	54	34	26	20	32.05	GR410	40	0.29	6"/300 CL
14	3-V-N338-06882	931062870000	SA 182-F316, SH,CERTIFY	ø40x26	0.26	35.7	40	26	22	16	22.5	F316	46	0.16	3"/150 & 300 CL
15	3-V-N339-06882	931062880000		ø60x30	0.666	45.2	54	34	26	20	28.87		46	0.23	6"/150 CL
16	3-V-N396-06882	931063410000		ø80x36	1.4	73.8	80	54	32	25	51.3			0.67	20"/150 CL
17	3-V-NG86-06882	932026110000	A276GR410 HT(CERTIFY)	ø75x36	1.25	64.3	72	48.5	32	25	45.0	GR410	40	0.45	16"/150 CL & 14"/300 C
18	3-V-N350-06882	931066890000	A 105, NR, CERTIFY									SA105	10		
19	3-V-N361-06882	931066900000		ø90x55	2.75	83.3	90	62	50	40	57.7	SA105	10	1.22	24"/150 CL
20	3-V-N436-06882	931071470000		ø80x36	1.4	67.5	80	54	32	25	48.1	SA105	10	0.49	16"/300 CL
21	3-V-N437-06882	931071480000		ø100x55	3.4	77	100	60	50	35	54.5		10	1.26	20"/300 CL
22	3-V-N201-06882	931079620000		ø43x25	0.215	32.5	38	22	15	9	19.35	SA105	10	0.09	2"/150 CL
23	3-V-NE96-06882	932011900000		ø100x60	3.7	86.5	100	66	51	36	60.83	SA105	10	1.27	22"/300 CL
24	3-V-ND15-06882	932031220000	SA182 F316 CERTIFY	ø60x27	0.60	48.4	58	38	21	15	32.05	F316	46	0.2	8"/150 ECO
25	3-V-NJ26-06882	932035550000	A276GR410 HT(CERTIFY)	ø80x36	1.4	67.5	80	54	32	25	48.1	410	40	0.49	16"/300 CL
26	3-V-NL97-06882	932063070000	SA182 F316 CERTIFY	ø56x28	0.54	32.5	38	22	21	15	19.35	F316	46	0.09	2"/150 & 300 CL
27	3-V-NK02-06882	932063240000		ø56x33	0.64	38.9	48	28	26	20	25.7			0.19	4"/150 & 300 CL

12.5 / 3.2

ø18-30	a11	-0.300
		-0.430
ø30-40		-0.310
		-0.470
ø40-50		-0.320
		-0.480
ø50-65		-0.340
		-0.530
ø65-80		-0.360
		-0.550
ø80-100		-0.380
		-0.600

NOTE

01. UNSPECIFIED CORNERS TO BE ROUNDED OFF TO R0.5

* 02. MATL MARK TO BE PUNCHED.

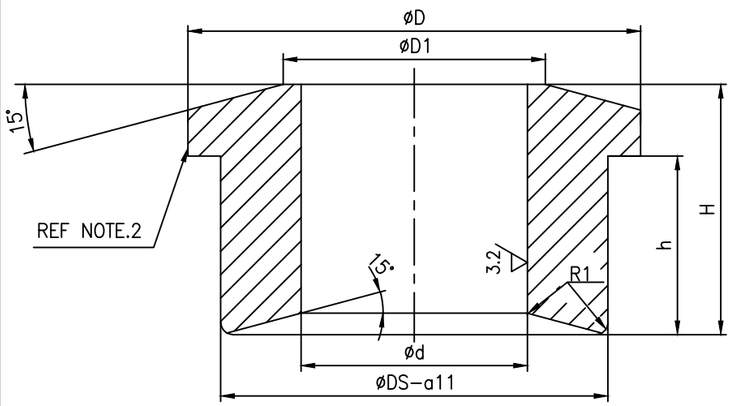

DCP No.	ALTD: RPS	APPD: SSK
–	CHD: MK	DT: 08.11.22

REV	SL. NO. 26 & 27 INCLUDED.
13	
ZONE –	

DCP No.	ALTD: A.MARIMUTHU	APPD: SSK
–	CHD: MS	DT: 26.09.14

REV	SL.No. 25 INCLUDED
12	
ZONE –	

CAUTION: The information on this document is the property of BHARAT HEAVY ELECTRICALS LTD. It must not be used directly or indirectly in any way detrimental to the interest of the company.

NO OF	DESCRIPTION	MATL CODE	MATL SPECN	HEAT TREATMENT	SCRAP SORT	NET WT (kg)	GROSS WT (kg)	DRAWING No. / COMP. CODE	ITEM No
–	–	–	–	–	–	–	–	–	–

TYPE OF PRODUCT
OR NAME OF
CUSTOMER/PROJECT

BHARAT HEAVY ELECTRICALS LTD.,
UNIT: HIGH PRESSURE BOILER PLANT.
TIRUCHIRAPALLI-620014.
365-191
02.03.2021

	NAME	SIGN	DATE	NO.OF VAR.
DRN	T.R.R.MURTHY		24.04.97	—
CHD	N.DHANDAPL		24.04.97	
APPD	A.VISWANATHAN		24.04.97	

DEPT	SCALE	WEIGHT (KG).	REFERENCE INFORMATIONS	NO. OF ITEMS
VL	NTS	REF TABLE	CAD :C306882	—
CODE 320				

TITLE	CARD CODE	DRAWING NO.	REV
GLAND FOLLOWER	U 01	3-V-0000-06882	13

Size A3

ALL DIMENSIONS ARE IN MILLIMETRES. FOR TOLERANCES OF UNTOLERANCED DIMENSIONS DURING MANUFACTURE REFER RELEVANT QCP / QP.

DRAWING NO. 3-V-0000-17059

12.5 / 3.2

SL. No.	DRAWING No.	COMP.CODE	MATL. SPECN.	SUGG.SIZE	SCRAP SORT	CROSS WT (kg)	NET WT (kg)	DIMENSIONS ØD1a11	ØD	ØD2	H	h	Ød	APPLICABLE TYPE
01	3-V-N201-17059	93 104 661 0000	A276 Gr.410, H&T,CERTIFY	Ø43X25	40	0.285	0.09	32.5	38	22	21	15	19.35	2"/300C
02	3-V-N202-17059	93 104 662 0000		Ø45X26		0.32	0.16	35.7	40	26	22	16	22.5	3"/150&300C
03	3-V-N203-17059	93 104 663 0000		Ø50X30		0.46	0.19	38.9	48	28	26	20	25.7	4"/150&300C
04	3-V-N204-17059	93 104 664 0000		Ø56X30		0.58	0.23	45.2	54	34	26	20	28.87	6"/150C
05	3-V-N205-17059	93 104 665 0000		Ø63X30		0.73	0.26	48.4	58	38	26	20	32.05	8"/150C
06	3-V-N206-17059	93 104 666 0000		Ø70X36		1.09	0.45	51.6	66	42	32	25	35.22	10"/150C
07	3-V-N207-17059	93 104 787 0000		Ø70X36		1.09	0.53	57.9	66	42	32	25	38.60	12"/150C
08	3-V-N223-17059	93 105 013 0000	A182 F321,SH, CERTIFY	Ø56X30	46	0.58	0.23	45.2	54	34	26	20	28.87	6"/150C
09	3-V-C329-17059	93 105 097 0000	A276 Gr410, H&T,CERTIFY	Ø60X30	40	0.666	0.29	48.4	54	34	26	20	32.05	4"/900C
10	3-V-N277-17059	93 105 771 0000	SA 479- TYPE 304,SH, CERTIFY	Ø43X25	46	0.285	0.09	32.5	38	22	21	15	19.35	2"/300C
11	3-V-N286-17059	93 105 772 0000		Ø45X26		0.32	0.16	35.7	40	26	22	16	22.5	3"/150&300C
12	3-V-N285-17059	93 105 773 0000		Ø50X30		0.46	0.19	38.9	48	28	26	20	25.7	4"/150&300C
13	3-V-N284-17059	93 105 774 0000		Ø56X30		0.58	0.23	45.2	54	34			28.87	6"/150C
14	3-V-N243-17059	93 105 775 0000		Ø63X30		0.73	0.26	48.4	58	38			32.05	8"/150C
15	3-V-N230-17059	93 105 931 0000	A276 Gr 410,HT, CERTIFY	Ø63X30	40	0.73	0.30	51.6	58				35.22	8"/300C
16	3-V-N304-17059	93 105 932 0000		Ø70X36		1.09	0.41	61.1	66	45	32	25	41.77	10"/300C
17	3-V-N309-17059	93 105 933 0000		Ø75X36		1.25	0.5	61.1	70	45			41.77	12"/300C
18	3-V-N472-17059	93 107 964 0000	SA 479-TYPE 304,SH, CERTIFY	Ø43X20	46	0.228	0.08	32.5	38	22	15	9	19.35	2"/150C
19	3-V-N298-17059	93 107 980 0000	A276 Gr410,H&T,CERTIFY	Ø43X20	40	0.228	0.08	32.5	38	22	15	9	19.35	2"/150C
20	3-V-N688-17059	93 108 342 0000	SA182 F316,SH, CERTIFY	Ø60X30	46	0.666	0.29	48.4	54	34	26	20	32.05	6"/300C
21	3-V-N685-17059	93 108 343 0000		Ø70X36		1.09	0.45	51.6	66	42	32	25	35.22	10"/150C
22	3-V-N686-17059	93 108 344 0000		Ø70X36		1.09	0.53	57.9	66	42	32	25	38.6	12"/150C
23	3-V-K963-17059	93 109 212 0000		Ø75X36		1.25	0.50	61.1	70	45	32	25	41.77	14"/150C
24	3-V-K964-17059	93 109 213 0000		Ø75X36		1.25	0.45	64.3	72	48.5	32	25	45.0	16"/150C
25	3-V-K966-17059	93 109 214 0000		Ø90x55		2.75	1.22	83.3	90	62	50	40	57.7	24"/150C
26	3-V-N498-17059	93 109 584 0000		Ø63X30		0.73	0.30	51.6	58	38	26	20	35.22	8"/300C
27	3-V-N231-17059	93 109 766 0000	A276 Gr 410, H&T,CERTIFY	Ø80X40	40	1.6	0.67	73.8	80	54	32	25	51.3	20"/150C
28	3-V-N944-17059	93 109 767 0000		Ø90X55		2.75	1.22	83.3	90	62	50	40	57.7	24"/150C
29	3-V-U015-17059	93 109 871 0000	A182 F316,SH, CERTIFY	Ø80X40	46	1.6	0.49	67.5	80	54	32	25	48.1	18"/150C
30	3-V-N754-17059	93 110 500 0000	A276 -410, H&T,CERTIFY	Ø80X40	40	1.6	0.45	64.3	72	48.5	32	25	45	16"/150C
31	3-V-N722-17059	93 110 502 0000		Ø80X40	40	1.6	0.49	67.5	80	54	32	25	48.1	18"/150C
32	3-V-NE67-17059	93 201 074 0000	A182 F316,SH, CERTIFY	Ø70X36	46	1.09	0.41	61.1	66	45	32	25	41.77	10"/300C

ØD1	a11
>Ø18 TO ≤ Ø30	-0.300
	-0.430
>Ø30 TO ≤ Ø40	-0.310
	-0.470
>Ø40 TO ≤ Ø50	-0.320
	-0.480
>Ø50 TO ≤ Ø65	-0.340
	-0.530
>Ø65 TO ≤ Ø80	-0.360
	-0.550
>Ø80TO ≤ Ø100	-0.380
	-0.600

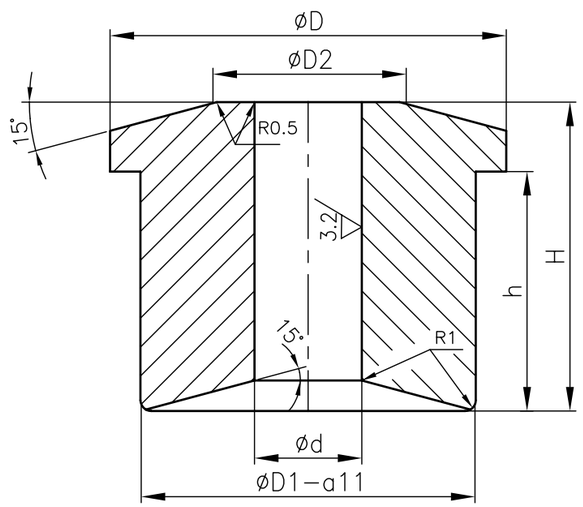

REV	DATE	ALTERED T.R.RAMAMURTHY
13	13.03.07	CHD & APPD P.BOOMINATHAN

SL. No.32 INCLUDED.

CAUTION: The information on this document is the property of BHARAT HEAVY ELECTRICALS LTD. It must not be used directly or indirectly in any way detrimental to the interest of the company.

NO OFF	DESCRIPTION	MATL CODE	MATL SPECN	HEAT TREATMENT	SCRAP SORT	NET WT (kg)	GROSS WT (kg)	DRAWING No	ITEM No

TYPE OF PRODUCT OR NAME OF CUSTOMER/PROJECT

DRAWING REDRAWN WITH REV.13 ON 13.03.2007

BHARAT HEAVY ELECTRICALS LTD.
UNIT: HIGH PRESSURE BOILER PLANT.
TIRUCHIRAPALLI 620014.
365-121

	NAME	SIGN	DATE	NO.OF VAR.
DRN	V.BAIRAVAN		13.03.07	
CHD	R.L.NARAYANAN		13.03.07	
APPD	P.LOGANATHAN		13.03.07	

DEPT VL
CODE 320
SCALE NTS.
WEIGHT (KG). —
REFERENCE INFORMATIONS CAD:C317059
NO. OF ITEMS

TITLE GLAND FOLLOWER
CARD CODE U 01
DRAWING NO. 3-V-0000-17059
REV 13

Size A3

ALL DIMENSIONS ARE IN MILLIMETRES. FOR TOLERANCES OF UNTOLERANCED DIMENSIONS DURING MANUFACTURE REFER RELEVANT QCP / QP.

DRAWING NO. 3-V-0000-17059

12.5 / 3.2

SL. No.	DRAWING No.	COMP.CODE	MATL. SPECN.	SUGG.SIZE	SCRAP SORT	CROSS WT (kg)	NET WT (kg)	DIMENSIONS ØD1a11	ØD	ØD2	H	h	Ød	APPLICABLE TYPE
01	3-V-N201-17059	93 104 661 0000	A276 Gr.410, H&T,CERTIFY	Ø43X25	40	0.285	0.09	32.5	38	22	21	15	19.35	2"/300C
02	3-V-N202-17059	93 104 662 0000		Ø45X26		0.32	0.16	35.7	40	26	22	16	22.5	3"/150&300C
03	3-V-N203-17059	93 104 663 0000		Ø50X30		0.46	0.19	38.9	48	28	26	20	25.7	4"/150&300C
04	3-V-N204-17059	93 104 664 0000		Ø56X30		0.58	0.23	45.2	54	34	26	20	28.87	6"/150C
05	3-V-N205-17059	93 104 665 0000		Ø63X30		0.73	0.26	48.4	58	38	26	20	32.05	8"/150C
06	3-V-N206-17059	93 104 666 0000		Ø70X36		1.09	0.45	51.6	66	42	32	25	35.22	10"/150C
07	3-V-N207-17059	93 104 787 0000		Ø70X36		1.09	0.53	57.9	66	42	32	25	38.60	12"/150C
08	3-V-N223-17059	93 105 013 0000	A182 F321,SH, CERTIFY	Ø56X30	46	0.58	0.23	45.2	54	34	26	20	28.87	6"/150C
09	3-V-C329-17059	93 105 097 0000	A276 Gr410, H&T,CERTIFY	Ø60X30	40	0.666	0.29	48.4	54	34	26	20	32.05	4"/900C
10	3-V-N277-17059	93 105 771 0000	SA 479- TYPE 304,SH, CERTIFY	Ø43X25	46	0.285	0.09	32.5	38	22	21	15	19.35	2"/300C
11	3-V-N286-17059	93 105 772 0000		Ø45X26		0.32	0.16	35.7	40	26	22	16	22.5	3"/150&300C
12	3-V-N285-17059	93 105 773 0000		Ø50X30		0.46	0.19	38.9	48	28	26	20	25.7	4"/150&300C
13	3-V-N284-17059	93 105 774 0000		Ø56X30		0.58	0.23	45.2	54	34			28.87	6"/150C
14	3-V-N243-17059	93 105 775 0000		Ø63X30		0.73	0.26	48.4	58	38			32.05	8"/150C
15	3-V-N230-17059	93 105 931 0000	A276 Gr 410,HT, CERTIFY	Ø63X30	40	0.73	0.30	51.6	58				35.22	8"/300C
16	3-V-N304-17059	93 105 932 0000		Ø70X36		1.09	0.41	61.1	66	45	32	25	41.77	10"/300C
17	3-V-N309-17059	93 105 933 0000		Ø75X36		1.25	0.5	61.1	70	45			41.77	12"/300C
18	3-V-N472-17059	93 107 964 0000	SA 479-TYPE 304,SH, CERTIFY	Ø43X20	46	0.228	0.08	32.5	38	22	15	9	19.35	2"/150C
19	3-V-N298-17059	93 107 980 0000	A276 Gr410,H&T,CERTIFY	Ø43X20	40	0.228	0.08	32.5	38	22	15	9	19.35	2"/150C
20	3-V-N688-17059	93 108 342 0000	SA182 F316,SH, CERTIFY	Ø60X30	46	0.666	0.29	48.4	54	34	26	20	32.05	6"/300C
21	3-V-N685-17059	93 108 343 0000		Ø70X36		1.09	0.45	51.6	66	42	32	25	35.22	10"/150C
22	3-V-N686-17059	93 108 344 0000		Ø70X36		1.09	0.53	57.9	66	42	32	25	38.6	12"/150C
23	3-V-K963-17059	93 109 212 0000		Ø75X36		1.25	0.50	61.1	70	45	32	25	41.77	14"/150C
24	3-V-K964-17059	93 109 213 0000		Ø75X36		1.25	0.45	64.3	72	48.5	32	25	45.0	16"/150C
25	3-V-K966-17059	93 109 214 0000		Ø90x55		2.75	1.22	83.3	90	62	50	40	57.7	24"/150C
26	3-V-N498-17059	93 109 584 0000		Ø63X30		0.73	0.30	51.6	58	38	26	20	35.22	8"/300C
27	3-V-N231-17059	93 109 766 0000	A276 Gr 410, H&T,CERTIFY	Ø80X40	40	1.6	0.67	73.8	80	54	32	25	51.3	20"/150C
28	3-V-N944-17059	93 109 767 0000		Ø90X55		2.75	1.22	83.3	90	62	50	40	57.7	24"/150C
29	3-V-U015-17059	93 109 871 0000	A182 F316,SH, CERTIFY	Ø80X40	46	1.6	0.49	67.5	80	54	32	25	48.1	18"/150C
30	3-V-N754-17059	93 110 500 0000	A276 -410, H&T,CERTIFY	Ø80X40	40	1.6	0.45	64.3	72	48.5	32	25	45	16"/150C
31	3-V-N722-17059	93 110 502 0000		Ø80X40	40	1.6	0.49	67.5	80	54	32	25	48.1	18"/150C
32	3-V-NE67-17059	93 201 074 0000	A182 F316,SH, CERTIFY	Ø70X36	46	1.09	0.41	61.1	66	45	32	25	41.77	10"/300C

ØD1	a11
>Ø18 TO ≤ Ø30	-0.300
	-0.430
>Ø30 TO ≤ Ø40	-0.310
	-0.470
>Ø40 TO ≤ Ø50	-0.320
	-0.480
>Ø50 TO ≤ Ø65	-0.340
	-0.530
>Ø65 TO ≤ Ø80	-0.360
	-0.550
>Ø80TO ≤ Ø100	-0.380
	-0.600

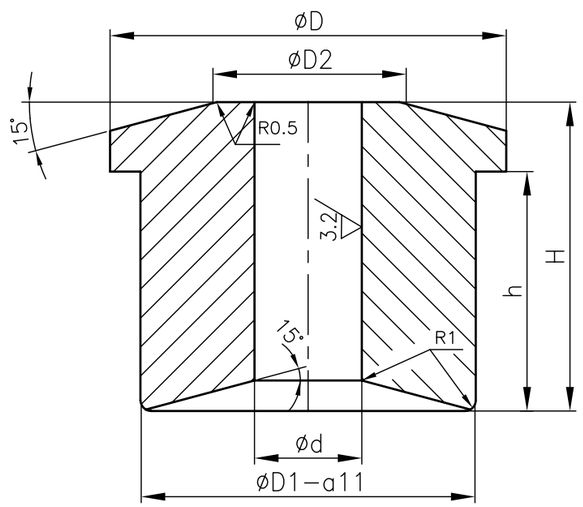

REV	DATE	ALTERED T.R.RAMAMURTHY
13	13.03.07	CHD & APPD P.BOOMINATHAN

SL. No.32 INCLUDED.

CAUTION: The information on this document is the property of BHARAT HEAVY ELECTRICALS LTD. It must not be used directly or indirectly in any way detrimental to the interest of the company.

NO OFF	DESCRIPTION	MATL CODE	MATL SPECN	HEAT TREATMENT	SCRAP SORT	NET WT (kg)	GROSS WT (kg)	DRAWING No	ITEM No

TYPE OF PRODUCT OR NAME OF CUSTOMER/PROJECT

DRAWING REDRAWN WITH REV.13 ON 13.03.2007

BHARAT HEAVY ELECTRICALS LTD.
UNIT: HIGH PRESSURE BOILER PLANT.
TIRUCHIRAPALLI 620014.
365-121

	NAME	SIGN	DATE	NO.OF VAR.
DRN	V.BAIRAVAN		13.03.07	
CHD	R.L.NARAYANAN		13.03.07	
APPD	P.LOGANATHAN		13.03.07	

DEPT VL
CODE 320
SCALE NTS.
WEIGHT (KG). —
REFERENCE INFORMATIONS CAD:C317059
NO. OF ITEMS

TITLE GLAND FOLLOWER
CARD CODE U 01
DRAWING NO. 3-V-0000-17059
REV 13

Size A3

ALL DIMENSIONS ARE IN MILLIMETRES.

FOR TOLERANCES OF UNTOLERANCED DIMENSIONS DURING MANUFACTURE REFER RELEVANT QCP/QP

REV	DATE	ALTERED
		CHD & APPD

12.5 / 3.2

ø48.4	−0.320
a11	−0.480

CAUTION: The information on this document is the property of BHARAT HEAVY ELECTRICALS LTD. It must not be used directly or indirectly in any way detrimental to the interest of the company.

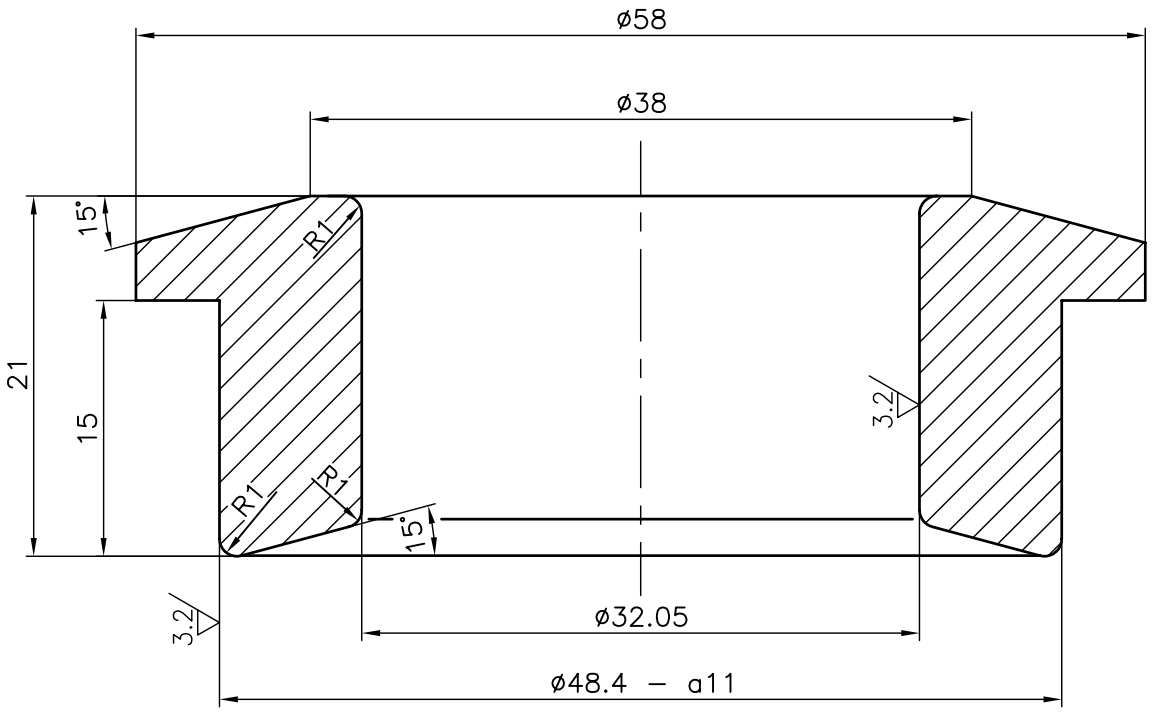

NOTE:−

01. UNSPECIFIED CORNERS TO BE ROUNDED OFF TO R0.5

COMP.CODE: 931108180000

NO OFF	DESCRIPTION	MATL CODE	MATL SPECN	HEAT TREATMENT	SCRAP SORT	NET WT (kg)	GROSS WT (kg)	DRAWING No	ITEM No
	ø63x30	15339143	SA105 CERTIFY	NR	10	0.20	0.67		

BHARAT HEAVY ELECTRICALS LTD.,
UNIT: HIGH PRESSURE BOILER PLANT.
TIRUCHIRAPALLI 620014.
365-122

	NAME	SIGN	DATE	NO.OF VAR
DRN	V.BAIRAVAN		12.04.03	
CHD	R.L.NARAYANAN		12.04.03	
APPD	M.RAJAKUMAR		12.04.03	

DEPT	SCALE	WEIGHT (KG).	REFERENCE INFORMATIONS	NO. OF ITEMS
VL	NTS	0.20	C426441	
CODE 320				

TITLE	CARD CODE	DRAWING NO.	REV
GLAND FOLLOWER	U 01	4−V−NC08−26441	0

Size A4

DRAWING NO. 3-V-0000-03689

ALL DIMENSIONS ARE IN MILLIMETRES

12.5 / 3.2

SL NO.	DRG.NO.	COMP.CODE	MATL SPECN	SUGG. SIZE	GROSS WT(kg)	SCRAP SORT	DIMENSIONS øDS	øD	øD1	H	h	ød	NET WT (kg)	VALVE TYPE
01	3-V-2476-03689/01	930583960000	ASME SA479 TYPE 304 ANNEALED CERTIFY	ø50 X 30	0.46	46	40	46	26	26	20	24.3	0.18	1.5"-C300 SV
02	3-V-2478-03689/01	930583690000		ø50 X 30	0.46	46	44	50	30	26	20	28.3	0.20	3"-C300 SV
03	3-V-2480-03689/01	930590320000		ø63 X 30	0.73	46	52	58	38	26	20	36.5	0.25	6"-C300 SV
04	3-V-2670-03689/01	931002560000		ø75 X 50	1.73	46	64	70	46	32	25	44.5	0.44	8"-C300 SV
05	3-V-P266-03689	931045410000	SA276 TYPE410 NT CERTIFY	ø50 X 30	0.46	40	44	50	30	26	20	28.3	0.20	4"-C300 RV
06	3-V-2887-03689	931088990000		ø63X30	0.73		52	58	38			36.5	0.25	6"-C300 RV
07	3-V-2899-03689	931089000000		ø75X50	1.73		64	70	46	32	25	44.5	0.44	8"-C300 RV

ø30-40	a11	-0.310 -0.470
ø40-50		-.320 -.480
ø50-65		-.340 -.530

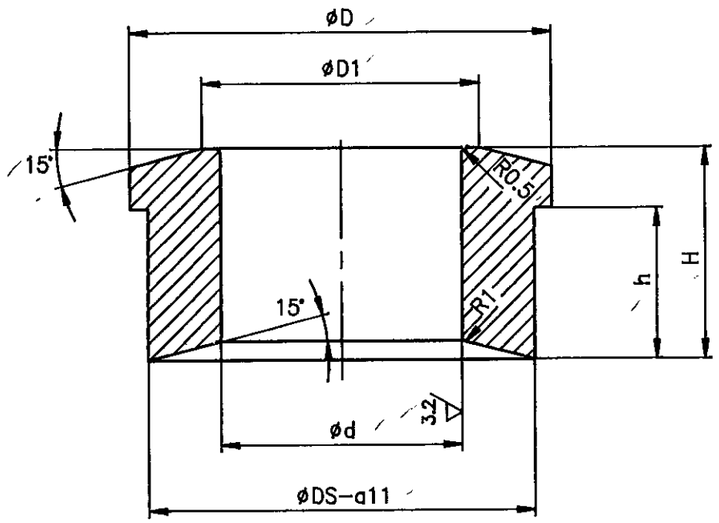

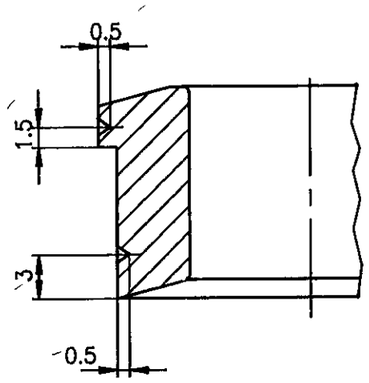

IDENTIFICATION FOR A276 TYPE410

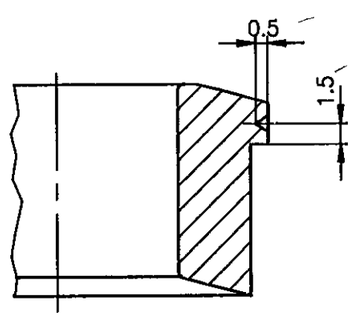

IDENTIFICATION FOR A479 TYPE304

NOTES:-

1. HARDNESS 230 BHN FOR SA276 TYPE410
2. HARDNESS 160 BHN FOR SA479 TYPE304

DRAWING RETRACED WITH 02 REVISION ON 12-01-95

NO OFF	DESCRIPTION	MATL CODE	MATL SPECN	HEAT TREATMENT	SCRAP SORT	NET WT (kg)	GROSS WT (kg)	DRAWING No	ITEM No
—	—	—	—	—	—	—	—		—

TYPE OF PRODUCT
OR NAME OF
CUSTOMER/PROJECT

BHARAT HEAVY ELECTRICALS LTD.,
UNIT: HIGH PRESSURE BOILER PLANT.
TIRUCHIRAPALLI-620014.

	NAME	SIGN	DATE
DRN	T.R.RAMAMURTHY		12.01.95
CHD	N.DHANAPAL		13/01/95
APPD	A.VISWANATHAN		19.1.95

NO. OF VAR.

DEPT	GRADE OF UNTOL. DIM	SCALE	WEIGHT (KG).	REFERENCE INFORMATIONS
VL		NTS	REFER TABLE	CAD:C306882
CODE 320	G / M / F			

NO. OF ITEMS

TITLE: GLAND FOLLOWER

CARD CODE: U 01

DRAWING NO. 3-V-0000-03689

REV 03

Size A3

TOLERANCE FOR UNTOLERANCED DIMENSIONS

UPTO 6 MM	= ± 0.1 MM
> 6 UPTO 120 MM	= ± 0.2 MM
MORE THAN 120 MM	= ± 0.5 MM
ANGULAR TOLERANCE	= ± 0.5 Deg.
CHAMFER	= ± 5 Deg.

CAUTION: The information on this document is the property of BHARAT HEAVY ELECTRICALS LTD. It must not be used directly or indirectly in any way detrimental to the interest of the company.

REV	DATE	ALTD: N.D.PAL	REV	DATE	ALTERED
04	16.06.98	CHK&APP:	03	14.01.95	CHECKED

1. SL.NO. 6 AND 7 ARE INCLUDED.

1. REFER DCN. No.CS: 0441
2. DRG MODIFIED AND CORRECT MATL SPECIFIED.

ALL DIMENSIONS ARE IN MILLIMETRES. FOR TOLERANCES OF UNTOLERANCED DIMENSIONS DURING MANUFACTURE REFER RELEVANT QCP / QP.

DRAWING NO. 3-V-0000-03023

SL. No.	DRAWING No.	COMP. CODE	RAW MATERIAL DETAILS				ØD	ØD1	ØB	ØB1	Ød	H	h	W	ØU	NET Wt. (Kg)
			MATL. SPECN.	SUGGESTED SIZE	SCRAP SORT	Wt. (Kg)										
1	3-V-0254-03023	–	A182-F6a cl.3 H&T CERTIFY	ø25 x 16	40	0.062	22	20	14	12	6	12	2	4	–	0.02
2	3-V-2372-03023	–	A182-F316L SH CERTIFY	ø50 x 16	46	0.062	22	20	14	12	6	12	2	4	16	0.02
3	3-V-0176-03023	–	A182-F6a cl.3 H&T CERTIFY	ø32 x 19	40	0.119	28	26	18	16	6	15	2	4	–	0.013
4	3-V-2373-03023	–	A182-F316L SH CERTIFY	ø50 x 19	46	0.186	32	30	22	20	6	15	2	4	25	0.039
5	3-V-1505-03023	930578850000	A182-F6a cl.3 H&T CERTIFY	ø40 x 19	40	0.186	32	30	22	20	6	15	2	4	–	0.067
6	3-V-2222-03023	930065060000		ø40 x 19	40	0.186	34	31	25	22	10	15	3	6	–	0.08
7	3-V-2374-03023	930576930000	A182-F316L SH CERTIFY	ø50 x 24	46	0.368	40	36	28	24	10	20	3	6	30	0.07
8	3-V-0128-03023	930064770000	A182-F6a cl.3 H&T CERTIFY	ø56 x 24	40	0.460	40	36	28	24	10	20	3	6	–	0.07
9	3-V-2283-03023	930559580000			40	0.460	42	38	30	26	10	20	3	6	–	0.075
10	3-V-0170-03023	930064780000			40	0.460	44	40	32	28	10	20	3	8	–	0.08
11	3-V-2375-03023	930574580000	A182-F316L SH CERTIFY	ø50 x 24	46	0.368	44	40	32	28	10	20	3	6	34	0.08
12	3-V-0171-03023	930064790000	A182-F6a cl.3 H&T CERTIFY	ø56 x 24	40	0.460	48	44	36	32	10	20	3	8	–	0.086
13	3-V-0173-03023	930064800000			40	0.460	52	48	40	36	10	20	3	8	–	0.09
14	3-V-1306-03023	930556690000		ø63 x 29	40	0.705	60	56	45	40	10	25	5	6	–	0.191
15	3-V-1299-03023	930603220000		ø80 x 29	40	1.140	64	60	48	44	12	25	5	8	–	0.236
16	3-V-P444-03023	931302910000	A182-F316 SH CERTIFY	ø56 x 24	46	0.460	40	36	28	24	10	20	3	6	–	0.07
17	3-V-NH51-03023	932027870000	A182-F6a cl.3 H&T CERTIFY	ø95 x 40	40	1.95	93	89	73.3	71	10	32	9	6	–	0.6
18	3-V-NH52-03023	932028090000		ø125 x 45	40	3.85	106	102	79	76	10	36	9	6	–	0.9

SECTION–AA

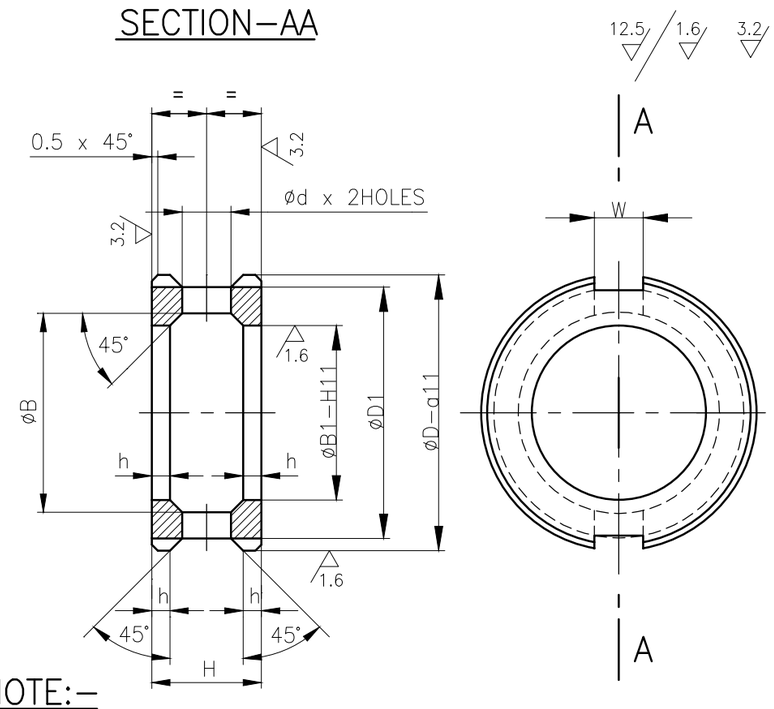

NOTE:–

1. HARDNESS REQUIRED 200HB (MIN.) FOR F6a MATL.

DIA ABOVE		UPTO & INCLUDING	a11	H11
65	–	80	–	+0.190
			–	+0.000
85	–	100	–0.380	–
			–0.600	–
100	–	115	–0.410	–
			–0.630	–

DETAIL–B

MATL. IDENTIFICATION FOR F316L

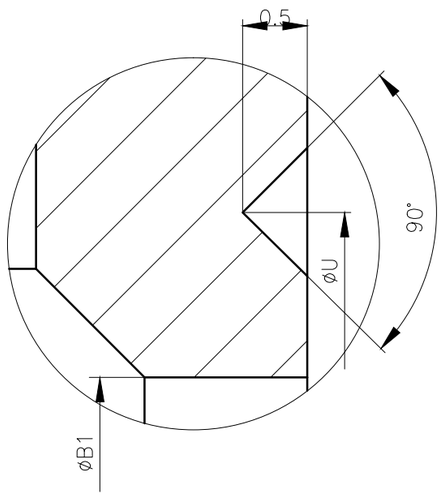

DIA ABOVE		UPTO & INCLUDING	a11	H11
10	–	18	–0.290	+0.110
			–0.400	+0.000
18	–	30	–0.300	+0.130
			–0.430	+0.000
30	–	40	–0.310	+0.160
			–0.470	+0.000
40	–	50	–0.320	+0.160
			–0.480	+0.000
50	–	65	–0.340	–
			–0.530	–

REV	DATE	ALTERED DEEPAKRAJ
02	06.11.12	CHD & APPD MRAJAK

SL.NO. 17 & 18 INCLUDED

CAUTION: The information on this document is the property of BHARAT HEAVY ELECTRICALS LTD. It must not be used directly or indirectly in any way detrimental to the interest of the company.

NO OFF	DESCRIPTION	MATL CODE	MATL SPECN	HEAT TREATMENT	SCRAP SORT	NET WT (kg)	GROSS WT (kg)	DRAWING No	ITEM No

TYPE OF PRODUCT OR NAME OF CUSTOMER/PROJECT: CS

DRG. REDRAWN WITH REV. 01 ON 13.07.04

BHARAT HEAVY ELECTRICALS LTD.
UNIT: HIGH PRESSURE BOILER PLANT.
TIRUCHIRAPALLI 620014.
365-121

	NAME	SIGN	DATE	NO.OF VAR.
DRN	K.P.LEON		13.07.04	
CHD	P.BOOMINATHAN		13.07.04	
APPD	K.S.RAMAN		13.07.04	

DEPT: VL
CODE: 320
SCALE: NTS.
WEIGHT (KG): –
REFERENCE INFORMATIONS: CAD:C303023
NO. OF ITEMS

TITLE: LANTERN RING
CARD CODE: U 01
DRAWING NO. 3-V-0000-03023
REV 02

Size A3

ALL DIMENSIONS ARE IN MILLIMETRES. FOR TOLERANCES OF UNTOLERANCED DIMENSIONS DURING MANUFACTURE REFER RELEVANT QCP / QP.

DRAWING NO. 3-V-0000-06946/07

SL. No.	DRAWING No.	COMP. CODE	RAW MATERIAL DETAILS: MATL. SPECN.	SUGGESTED SIZE	SCRAP SORT	Wt. (Kg)	ØD	ØD1	ØB	ØB1	Ød	H	h	W	NET Wt. (Kg)	SIZE/RATING
1	3-V-N002-06946	931043040000	ASTM A182 F6a cl.3, H&T, CERTIFY	ø50 x 24	40	0.368	45.2	41.2	32.6	28.6	8	18	3	8	0.1	6"/150C
2	3-V-N328-06946	931058620000		ø34 x 20		0.186	32.5	30.5	21.05	19.05	6	15	2	4	0.067	2"/150C 2"/300C
3	3-V-N313-06946	931058630000		ø36 x 20		0.368	35.7	32.7	25.23	22.23	8	15	3	6	0.08	3"/150C 3"/300C
4	3-V-N303-06946	931058640000		ø40 x 20		0.368	38.9	34.9	29.4	25.4	8	15	3	6	0.07	4"/150C 4"/300C
5	3-V-N275-06946	931058650000		ø50 x 25		0.460	48.4	44.4	35.75	31.75	10	20	3	8	0.086	8"/150C 6"/300C
6	3-V-N329-06946	931058660000		ø54 x 25		0.460	51.6	47.6	38.93	34.93	10	20	3	8	0.09	8"/300C 10"/150C
7	3-V-N330-06946	931058670000		ø60 x 25		0.705	57.9	53.9	42.1	38.1	10	20	3	8	0.151	12"/150C
8	3-V-N331-06946/1	931058680000		ø63 x 30		0.705	61.1	57.1	44.28	41.28	12	20	3	8	0.191	10"-12"/300C, 14"-150C
9	3-V-N370-06946/1	931062190000		ø80 x 30		1.2	73.8	69.8	54.3	51.3	12	20	3	8	0.36	20"/150C
10	3-V-N460-06946	931072370000	ASTM A182-F316 SH, CERTIFY	ø34 x 20	46	0.186	32.5	30.5	21.05	19.05	6	15	2	4	0.067	2"-150C 2"-300C
11	3-V-N380-06946	931072380000		ø36 x 20		0.368	35.7	32.7	25.23	22.23	8	15	3	6	0.08	3"-150C/300C
12	3-V-U108-06946	931072390000		ø40 x 20		0.368	38.9	34.9	29.4	25.4	8	15	3	6	0.07	4"-150C/300C
13	3-V-N523-06946	931072400000		ø50 x 24		0.368	45.2	41.2	32.6	28.6	8	18	3	8	0.1	6"-150C
14	3-V-N302-06946	931072410000		ø50 x 25		0.460	48.4	44.4	35.75	31.75	10	20	3	8	0.086	6"-300C 8"-150C
15	3-V-N387-06946	931072420000		ø54 x 25		0.460	51.6	47.6	38.93	34.93	10	20	3	8	0.09	8"-300C 10"-150C
16	3-V-N384-06946/1	931072430000		ø63 x 30		0.705	61.1	57.1	44.28	41.28	12	20	3	8	0.191	10"-300C 12"-300C
17	3-V-N394-06946	931072440000		ø60 x 25		0.705	57.9	53.9	42.1	38.1	10	20	3	8	0.151	12"/150C
18	3-V-N598-06946/1	931075970000	ASTM A182-F6a cl.3, HT, CERTIFY	ø70 x 30	40	0.91	64.3	60.3	49.0	45.0	12	20	3	8	0.18	14"/300C, 16"/150C
19	3-V-K821-06946/2	931080370000		ø90 x 30		1.5	83.3	79.3	61.7	57.7	12	20	3	8	0.32	24"/150C
20	3-V-K797-06946/1	931080380000		ø75 x 30		1.1	67.5	63.5	52.1	48.1	12	20	3	8	0.21	16"/300C
21	3-V-K822-06946/1	931080390000		ø85 x 30		1.4	77	73	58.5	54.5	12	20	3	8	0.26	20"/300C
22	3-V-N826-06946	931098370000		ø112 x 30		2.3	105.6	101.6	80.7	76.7	12	22	3	8	0.42	32"/150C

DIA ABOVE	UPTO & INCLUDING	q11	H11
18	30	-0.300 / -0.430	+0.130 / 0
30	40	-0.310 / -0.470	+0.160 / 0
40	50	-0.320 / -0.480	+0.160 / 0
50	65	-0.340 / -0.530	+0.190 / 0
65	80	-0.360 / -0.550	+0.190 / 0
80	100	-0.380 / -0.600	+0.220 / 0
100	120	-0.410 / -0.630	+0.220 / 0

SECTION-AA

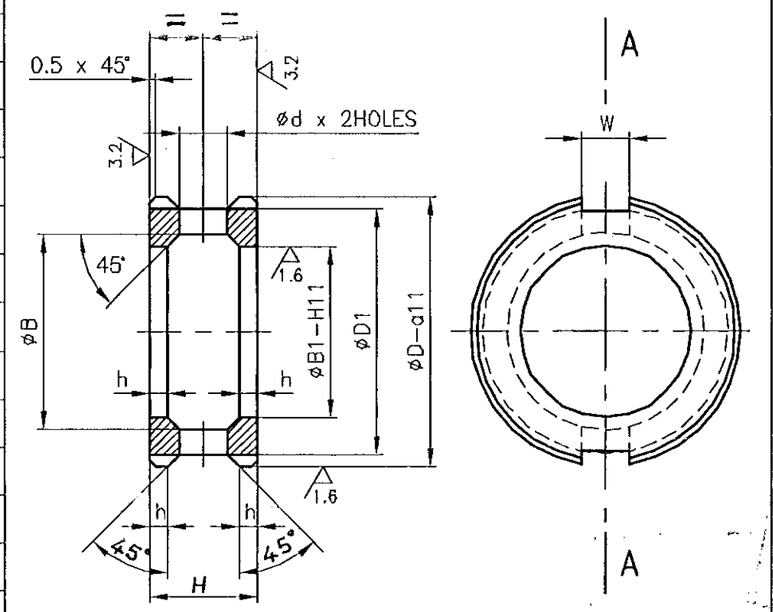

NOTE:-

1. HARDNESS REQUIRED 200HB (MIN.)

DRG. RETRACED WITH REV. 01 ON 12.10.96

REV.	DATE	ALT.	CHE & APPD.
04	19.5.97	R.L.	M.R.K.
03	18.1.97	R.L.	CHD & APPD: M.R.K
02	12.10.96	CHD & APPD	
07	4.2.03	V.B.	R.L.
06	14.1.2000	R.L.	M.R.K.
05	29.7.97	R.L.	M.R.K.

SL. NOS 19, 20 & 21 INCLUDED

SL. No. 18 INCLUDED

SL. No. 10 TO 17 INCLUDED

TOL. INCLUDED FOR SL. No. 19. DCP 800160

SL. No. 22 INCLUDED

FOR SL. NOS. 8, 9, 16, 18, 19, 20 & 21, DIM. 3 WAS 5. DCN No. HM 0268

CAUTION: The information on this document is the property of BHARAT HEAVY ELECTRICALS LTD. It must not be used directly or indirectly in any way detrimental to the interest of the company.

TYPE OF PRODUCT
OR NAME OF
CUSTOMER/PROJECT

BHARAT HEAVY ELECTRICALS LTD.,
UNIT: HIGH PRESSURE BOILER PLANT.
TIRUCHIRAPALLI-620014.

	NAME	SIGN	DATE	NO. OF VAR.
DRN	T.R.R.MURTHY		10.10.96	
CHD	N.DHANAPAL		12.10.96	
APPD	A.V.NATHAN		12.10.96	

DEPT	CODE	SCALE	WEIGHT (KG).	REFERENCE INFORMATIONS	NO. OF ITEMS
VL	320	NTS.	–	CAD:C306946	

TITLE	CARD CODE	DRAWING NO.	REV
LANTERN RING	U 01	3-V-0000-06946	07

SCANNED

Size A3

ALL DIMENSIONS ARE IN MILLIMETRES.

FOR TOLERANCES OF UNTOLERANCED DIMENSIONS DURING MANUFACTURE REFER RELEVANT QCP/QP

REV	DATE	ALTERED	R.P.SINGH
01	07.08.19	CHD & APPD	SSK & KRS

SL. No. 02 INCLUDED.

NET WT. UPDATED.

CAUTION: The information on this document is the property of BHARAT HEAVY ELECTRICALS LTD. It must not be used directly or indirectly in any way detrimental to the interest of the company.

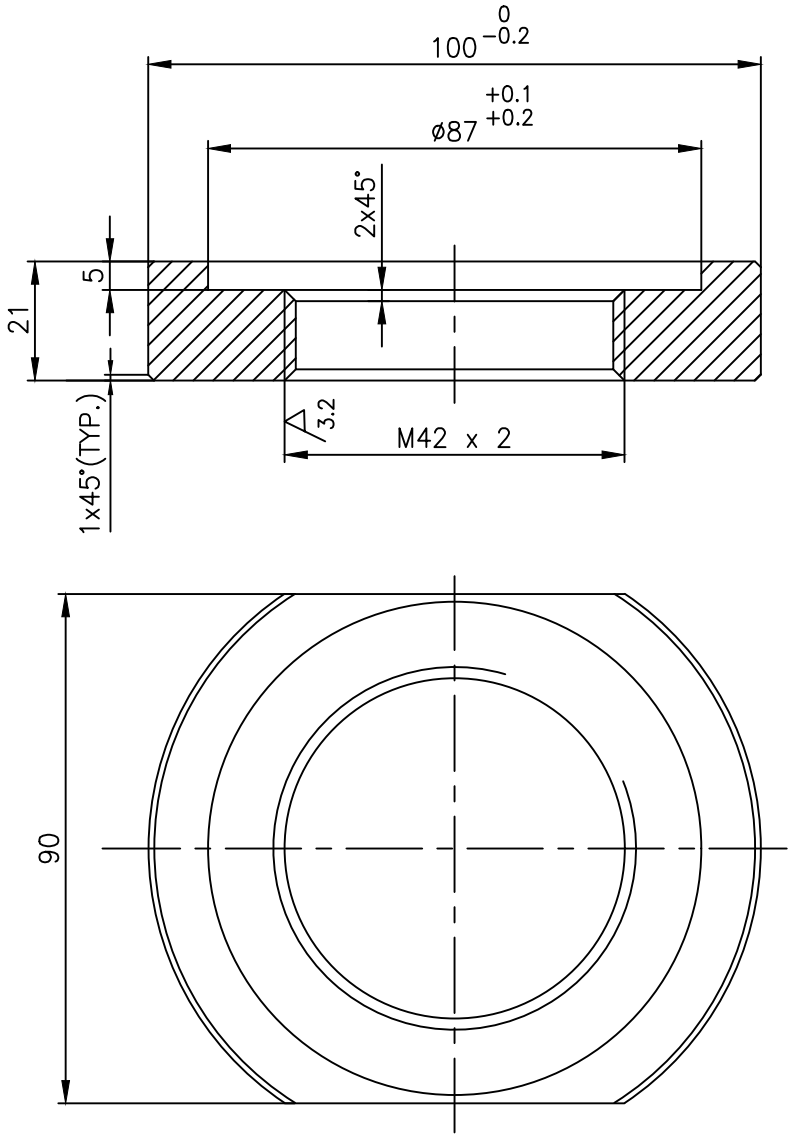

NO OFF	DESCRIPTION	MATL CODE	MATL SPECN	HEAT TREATMENT	SCRAP SORT	NET WT (kg)	GROSS WT (kg)	DRAWING No / COMP CODE	ITEM No
02	SUGG.SIZE:– ø110 x 27	–	ASTM A182 F60 CERTIFY	SH	46	0.72	1.66	4–V–NP33–26957 / 93 205 366 0000	––
01	SUGG.SIZE:– ø105 x 27	–	ASTM A105 CERTIFY	NR	10	0.72	1.66	4–V–NC06–26957 / 93 202 414 0000	––

BHARAT HEAVY ELECTRICALS LTD.,
UNIT: HIGH PRESSURE BOILER PLANT.
TIRUCHIRAPALLI 620014.
365–122

	NAME	SIGN	DATE	NO.OF VAR
DRN	T.R.RAMAMURTHY		28.04.11	
CHD	S.SATHEES		28.04.11	
APPD	M.RAJA KUMAR		28.04.11	

DEPT	SCALE	WEIGHT (KG).	REFERENCE INFORMATIONS	NO. OF ITEMS
VL	NTS	0.5	CAD REF. C426957	
CODE 320				

TITLE	CARD CODE	DRAWING NO.	REV
RETAINER	U 01	4–V–0000–26957	01

Size A4

ALL DIMENSIONS ARE IN MILLIMETRES. FOR TOLERANCES OF UNTOLERANCED DIMENSIONS DURING MANUFACTURE REFER RELEVANT QCP / QP.

DRAWING NO: 3-V-0000-02948

SL. No.	DRAWING No.	MATL. SPECN.	RAW MATL. SIZE	MATL. CODE	NET WT. / GROSS WT.	HEAT TREAT MENT / SCRAP SORT	MDxP-6g	ØD2-H8	ØD1	ØD	H	h1	h2	W-h11	ØD3	ØD4	h3	REMARKS
1	3-V-2476-02948/02	ASTM A182 GrF6	Ø56 x 30	15024261	0.143	H&T	42x2	30.3	39	52	20	5	4	46	42	-	25	2-C300-SV/RV
	93 058 368 0000				0.580	40												
2	3-V-2478-02948/03	ASTM A182 GrF6	Ø80 x 45	15024263	0.658	H&T	56x2	36.3	53	72	26	6	4	65	56	-	40	3-C300-SV/RV
	93 058 592 0000				2.360	40												
3	3-V-2480-02948/03	ASTM A182 GrF6	Ø100 x 125	15024264	1.503	H&T	64x4	44.3	58	86	38	10	8	75	64	46	90	6-C300 SV
	93 059 449 0000				6.756	40												
4	3-V-2481-02948/02	ASTM A182 GrF6	Ø100 x 125	15024264	2.205	H&T	72x4	48.3	66	100	45	10	8	90	72	50	115	8-C300 SV
	-				7.680	40												
5	3-V-2479-02948	ASTM A182 GrF6	Ø80 x 80	15024263	0.890	H&T	56x2	36.3	53	72	26	6	4	65	56	38	75	4-C300-SV/RV
	-				3.140	40												
6	3-V-2670-02948	ASTM A182 GrF6	Ø100 x 110	15024264	1.573	H&T	72x4	52.3	66	100	39	10	8	90	72	55	100	8-C300 SV
	93 100 575 0000				6.756	40												
7	3-V-2883-02948	ASTM A182 F304	Ø90 x 115	---	1.250	SH	60x4	40.3	54	85	44	10	8	75	60	42	110	6-C150-SV
	93 166 424 0000				5.740	46												
8	3-V-P300-02948/01	ASME SA479, T304	Ø100 x 83	15024103	1.100	SH	64x4	44.3	58	86	38	10	8	75	64	46	72	6-C300-SV/RV
	93 106 148 0000	CERTIFY			5.120	46												
9	3-V-P295-02948	ASME SA479, T304	Ø80 x 45	15024210	0.658	SH	56x2	36.3	53	72	26	6	4	65	56	-	40	3-C300-SV/RV
	93 106 149 0000	CERTIFY			2.360	46												
10	3-V-2927-02948/01	ASTM SA182 Gr F316	Ø100 x83	15924246	1.100	SH	64x4	44.3	58	86	38	10	8	75	64	46	72	6-C300-SV/RV
	93 106 661 0000	CERTIFY			5.120	46												
11	3-V-2925-02948	ASTM SA182 Gr F316	Ø100 x 110	15924246	1.573	SH	72x4	52.3	66	100	39	10	8	90	72	55	100	8-C300 SV
	93 106 662 0000	CERTIFY			6.756	46												
12	3-V-P726-02948/01	ASTM SA182 Gr F60	Ø110 x 83	92203838	1.100	SH	64x4	44.3	58	86	38	10	8	75	64	46	72	6-C300-SV/RV
	93 205 253 0000	CERTIFY			6.190	46												
13	3-V-P779-02948/01	SA351 CF3M	—	92 203 889	1.100	SH	64x4	44.3	58	86	38	10	8	75	64	46	72	6-C300-SV/RV
	93 205 474 0000	CERTIFY			3.450	46												
14	3-V-P831-02948	SA351 CF3M	—	92 206 013	1.573	SH	72x4	52.3	66	100	39	10	8	90	72	55	100	8-C300 SV
	93 205 794 0000	CERTIFY			5.960	46												

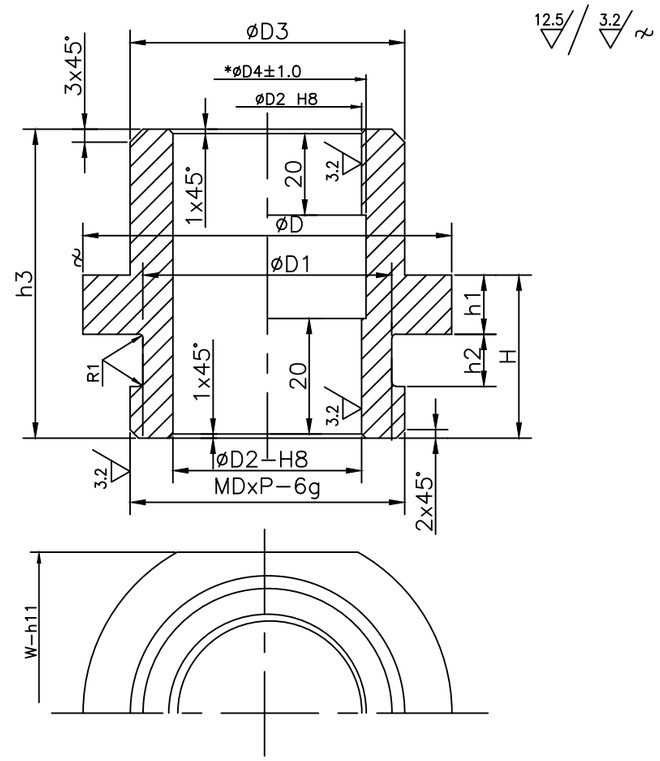

40.1–50.0 h11	0 / −0.160
50.1–80.0 h11	0 / −0.190
80.1–120.0 h11	0 / −0.220
30.0–50.0 H8	+0.039 / 0

NOTES:

1. HEAT TREAT TO 250BHN MIN. FOR A182–F6 MATL ONLY
2. MATL. SHALL BE 'CERTIFY'.
3. *DIMENSION ØD4 FOR UNDERCUT IS APPLICABLE FOR SL.No.3,4,5,6,7,8,10,11,12 ONLY. FOR SL.No.1, 2 & 3 UNDECUT SHALL NOT BE PROVIDED.

NO OF	DESCRIPTION	MATL CODE	MATL SPECN	HEAT TREATMENT	SCRAP SORT	NET WT (kg)	GROSS WT (kg)	DRAWING No. / COMP. CODE	ITEM No
01	RETAINER*	--	--	--	--	--	--	-- / --	--

CAUTION: The information on this document is the property of BHARAT HEAVY ELECTRICALS LTD. It must not be used directly or indirectly in any way detrimental to the interest of the company.

TYPE OF PRODUCT
OR NAME OF
CUSTOMER/PROJECT

365–191
02.03.2021

BHARAT HEAVY ELECTRICALS LTD.,
UNIT: HIGH PRESSURE BOILER PLANT.
TIRUCHIRAPALLI–620014.

	NAME	SIGN	DATE	NO.OF VAR.
DRN	S.SOMASUNDARAM		01.01.75	—
CHD	SIVA SUBRAMANIAN		01.01.75	
APPD	R.K		01.01.75	

DCP No.	ALTD:	APPD:	DCP No.	ALTD:	APPD:
–	RPS	SSK	–	RPS	SSK
	CHD: MK	DT: 08.12.23		CHD: SAB	DT: 18.11.20

REV		REV	
12	DIM. h3 – 72 WAS 90 FOR SL. No. 8, 10, 12 & 13. RAW MATL. SIZE AND WEIGHTS UPDATED ACCORDINGLY.	11	SL. No. 14 INCLUDED.
ZONE –		ZONE –	

DEPT	SCALE	WEIGHT (KG).	REFERENCE INFORMATIONS	NO. OF ITEMS
VL	NTS			—
CODE 320				

TITLE	CARD CODE	DRAWING NO.	REV
DISK–STEM RETAINER	U 01	3–V–0000–02948	12

Size A3

ALL DIMENSIONS ARE IN MILLIMETRES. FOR TOLERANCES OF UNTOLERANCED DIMENSIONS DURING MANUFACTURE REFER RELEVANT QCP / QP.

DRAWING NO. 3-V-0000-35299

SL. No.	DRAWING No.	COMP. CODE	MATL. SPECN.	SIZE	GROSS WT.	ØD	ØD1	THREAD	H	W	NET WT.	APPLICABLE VALVE
01	3-V-S833-35299	93 205 803 0000	SA105, NR, CERTIFY	Ø75X22	0.76	72	61	M36X2	14	65	0.24	2", 2-1/2", 3", 4"-C150/300
02	3-V-NK32-35299	93 205 806 0000	A182 F60, SH, CERTIFY	Ø76X22	0.80	72	61	M36X2	14	65	0.24	2", 2-1/2", 3", 4"-C150/300
03	3-V-S836-35299	93 205 804 0000	SA105, NR, CERTIFY	Ø100X30	1.85	100	87	M52X2	21	90	0.74	5", 6"-C150, 6"-C300, 4"-C600
04	3-V-S863-35299	93 205 805 0000	SA105, NR, CERTIFY	Ø100X30	1.85	100	87	M56X2	21	90	0.70	10"-C300
05	3-V-F878-35299	93 205 826 0000	SA105, NR, CERTIFY	Ø100X30	1.85	100	87	M64X2	21	90	0.61	8"-C600
06	3-V-F501-35299	93 206 456 0000	SA105, NR, CERTIFY	Ø75X22	0.76	72	61	M39X2	14	65	0.23	2"-C600
07	3-V-F512-35299	93 205 829 0000	SA105, NR, CERTIFY	Ø75X22	0.76	72	61	M42X2	14	65	0.35	3"-C600

12.5 / 3.2

SECTION A-A

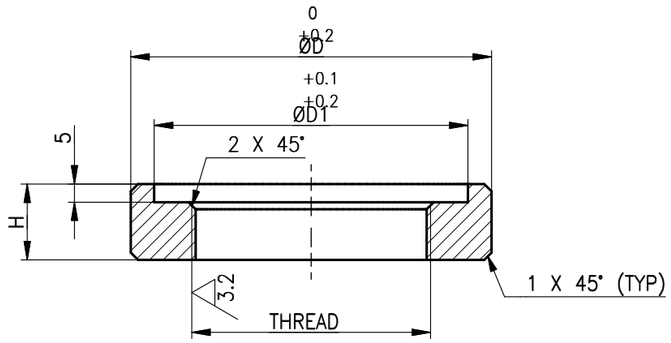

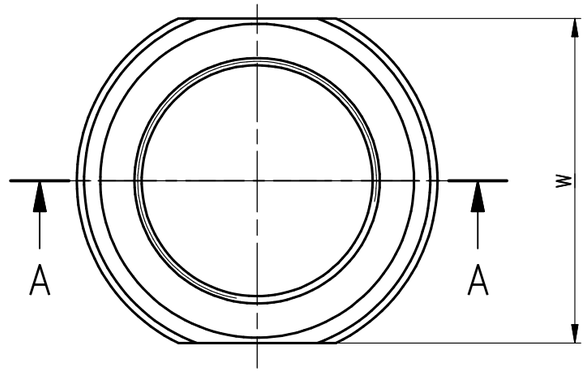

NOTES:

1. LATEST APPLICABLE QUALITY PROCEDURE SHALL BE FOLLOWED IN ALL RESPECTS.

SL. NO.	DESCRIPTION	MATL CODE	MATL SPECN	HEAT TREATMENT	SCRAP SORT	NET WT (kg)	GROSS WT (kg)	DRAWING No. / COMP. CODE	ITEM No
–	–	–	–	–	–	–	–	– / –	–

TYPE OF PRODUCT
OR NAME OF
CUSTOMER/PROJECT

BHARAT HEAVY ELECTRICALS LTD.,
UNIT: HIGH PRESSURE BOILER PLANT.
TIRUCHIRAPALLI-620014.

365-191
02.03.2021

	NAME	SIGN	DATE	NO.OF VAR.
DRN	R.P.SINGH		20.04.23	
CHD	MUKESH KUMAR		20.04.23	—
APPD	S.SATHEES		20.04.23	

DEPT VL
CODE 320
SCALE NTS
WEIGHT (KG). –
REFERENCE INFORMATIONS –
NO. OF ITEMS —

TITLE RETAINER
CARD CODE U 01
DRAWING NO. 3-V-0000-35299
REV 00

DCP No.	ALTD:	APPD:
	CHD:	DT:
REV		
ZONE		

CAUTION: The information on this document is the property of BHARAT HEAVY ELECTRICALS LTD. It must not be used directly or indirectly in any way detrimental to the interest of the company.

Size A3

ALL DIMENSIONS ARE IN MILLIMETRES. FOR TOLERANCES OF UNTOLERANCED DIMENSIONS DURING MANUFACTURE REFER RELEVANT QCP / QP.

DRAWING NO. 3-V-0000-04732

SL.No.	DRAWING No.	MATL. SPECN.	SUGGESTED SIZE	COMP. CODE	NET.Wt. / GROSS Wt.	HEAT TREATMENT / SCRAP SORT	MxP 6g	ØD2 H8	ØD1	ØD	H	h1	h2	W h11	ØD3	ØD4	h3					APPLICABLE TYPE No.
1	3-V-2691-04732/02	ASTM A182 Gr F6	ø100x77	931000900000	0.93 / 4.6	H&T / 40	64x4	44.3	58	86	38	10	8	75	64	46	72					6-C300-RV
2	3-V-2690-04732/02	ASTM A182 Gr F6	ø80x80	931002440000	0.82 / 3.15	H&T / 40	56x2	36.3	53	72	26	6	4	65	56	38	72					4-C300-RV
3	3-V-2692-04732/03	ASTM A182 Gr F6	ø100x60	931002490000	0.91 / 3.7	H&T / 40	72x4	52.3	66	100	39	10	8	90	72	54	55					8-C300-RV
4	3-V-P266-04732/02	X20Cr MOV 121	ø75x77	931045400000	0.82 / 2.67	H&T / 20	56x2	36.3	53	72	26	6	4	65	56	38	72					4-C300-RV
5	3-V-P569-04732/01	OHTARON	ø100x60	932024870000	0.91 / 3.7	Q & T / 40	72x4	52.3	66	100	39	10	8	90	72	54	55					8-C300-RV

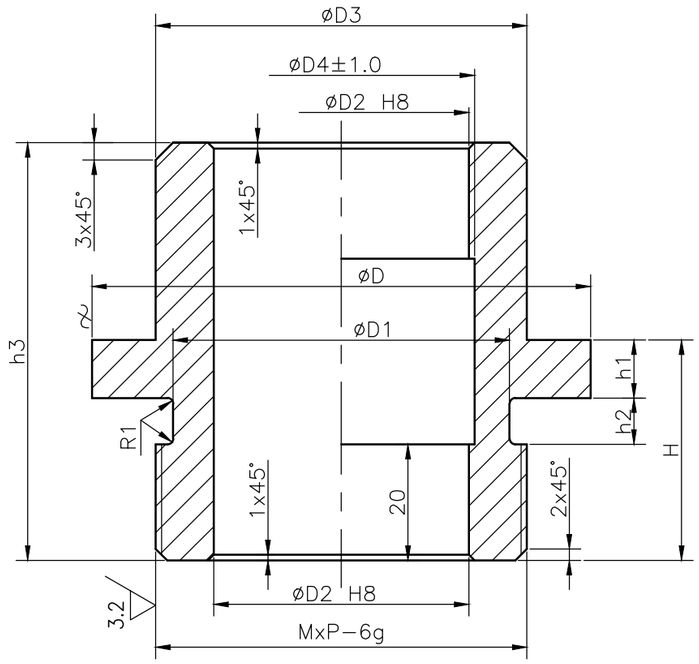

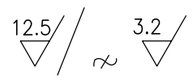

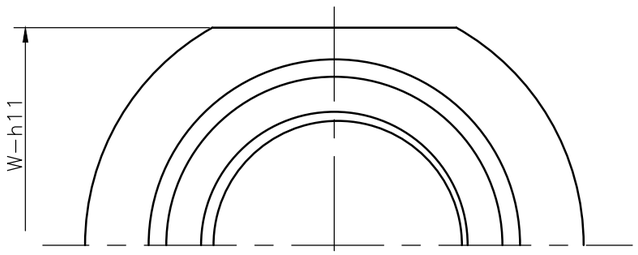

ABOVE INCLUDING	
50-80 h11	0.000 / -0.190
80-120 h11	0.000 / -0.220
30-50 h8	+0.039 / 0.000
50-80 h8	+0.046 / 0.000

NOTES:

1.HEAT TREAT TO 250BHN MIN.

NO OFF	DESCRIPTION	MATL CODE	MATL SPECN	HEAT TREATMENT	SCRAP SORT	NET WT (kg)	GROSS WT (kg)	DRAWING No	ITEM No
01	RETAINER*	--	--	--	--	--	--	--	--

REV	DATE	ALTERED	
06	12.11.12	T.R.R.MURTHY	
		CHD&APPD	SSK & KRS

DIMN.øD WAS øD1
DIMN.øD1 INCLUDED

REFER DCP:801397

REV	DATE	ALTERED	
05	17.08.11	T.R.R.MURTHY	
		CHD&APPD	SSK & MRK

SL. No.05 INCLUDED.

REV	DATE	ALTERED	
04	20.11.96	T.R.RAMAMURTHY	
		CHD & APPD	A.V.NATHAN

NOTES UPDATED

REFER DCN No. CS 0629

CAUTION: The information on this document is the property of BHARAT HEAVY ELECTRICALS LTD. It must not be used directly or indirectly in any way detrimental to the interest of the company.

TYPE OF PRODUCT OR NAME OF CUSTOMER/PROJECT

DRAWING REDRAWN WITH REV.06 ON 12.11.2012
(REFER DCN.GV0019,GV0039 &CS:0629)

BHARAT HEAVY ELECTRICALS LTD.,
UNIT: HIGH PRESSURE BOILER PLANT.
TIRUCHIRAPALLI-620014.

	NAME	SIGN	DATE	NO.OF VAR.
DRN	S.KANMANI		20.11.96	
CHD	T.R.R.MURTHY		20.11.96	
APPD	P.B.NATHAN		20.11.96	

DEPT	CODE	SCALE	WEIGHT (KG).	REFERENCE INFORMATIONS	NO. OF ITEMS
VL	320	N T S	--	CAD.REF.C304732	

TITLE	CARD CODE	DRAWING NO.	REV
DISK-STEM RETAINER	U 01	3-V-0000-04732	06

Size A3

ALL DIMENSIONS ARE IN MILLIMETRES.

FOR TOLERANCES OF UNTOLERANCED DIMENSIONS DURING MANUFACTURE REFER RELEVANT QCP/QP

REV	DATE	ALTERED M.RAMESH
06	12.07.14	CHD & APPD SSK&KRS

IN DRAWING No:

4.V.P560.90790 DIMENSIONS

79 WAS 50

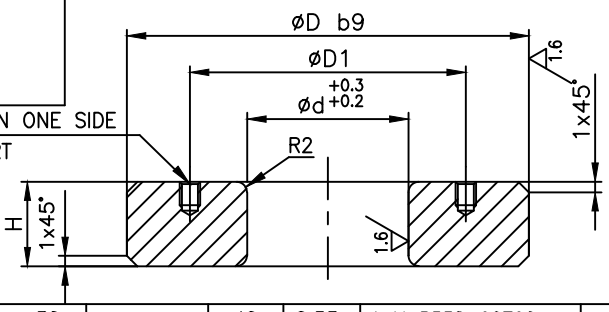

øD	b9
30 to 40	−0.170 / −0.232
40 to 50	−0.180 / −0.242
50 to 65	−0.190 / −0.264
65 to 80	−0.200 / −0.278
80 to 100	−0.220 / −0.304

SL No.	øD	øD1	ød	H	SUGGESTED MIN.SIZE	MATERIAL SPECEN.	SCRAP SORT	NET WT (kg)	DRAWING NUMBER	COMP CODE	ITEM No
	DIMENSIONS										
30	96	83	70	20	ø100 x 30	ASTM A276 Gr.410 CERTIFY, NT	40	0.53	4–V–P538–90790	932024180000	––
29	87	74.5	62	71	ø90 x 79		40	1.627	4–V–P560–90790/01	932023960000	––
28	79	67	55	40	ø80 x 50		40	0.790	4–V–P476–90790	931309130000	––
27	79	67	55	60	ø80 x 70		40	1.185	4–V–P366–90790/01	931306180000	––
26	40	32	24	20	ø45 x 25		40	0.040	4–V–2477–90790	931305020000	––
25	64	54	44	15	ø68 x 23		40	0.043	4–V–2925–90790	931079520000	––
24	64	54	44	8	ø68 x 17		40	0.043	4–V–2930–90790	931079510000	––
23	52	44	36	16.5	ø55 x 25		40	0.043	4–V–2928–90790	931079500000	––
22	52	44	36	7.5	ø55 x 16		40	0.043	4–V–2927–90790	931079490000	––
21	44	36	28	10.5	ø50 x 18		40	0.043	4–V–2923–90790	931079480000	––
20	44	36	28	5.5	ø50 x 13		40	0.043	4–V–2890–90790	931079470000	––
19	50	41	32	27	ø55 x 34		40	0.043	4–V–B303–90790	931079460000	––
18	50	41	32	6	ø55 x 13		40	0.043	4–V–B103–90790	931079450000	––
17	44	36	28	15.5	ø50 x 23		40	0.043	4–V–B302–90790	931079440000	––
16	44	36	28	4	ø50 x 11		40	0.043	4–V–B102–90790	931079430000	––
15	61.1	51	41.275	10.5	ø63 x 18		40	0.043	4–V–N628–90790	931079420000	––
14	61.1	51	41.275	3.5	ø63 x 11		40	0.043	4–V–N239–90790	931079410000	––
13	61.1	51	41.275	8	ø63 x 15		40	0.1	4–V–N382–90790	931079400000	––
12	51.6	43	34.925	12	ø55 x 19		40	0.106	4–V–N244–90790	931079390000	––
11	51.6	43	34.925	4	ø55 x 11		40	0.035	4–V–N399–90790	931079380000	––
10	48.4	40	31.75	18	ø52 x 25		40	0.148	4–V–N340–90790	931079370000	––
09	38.9	32	25.4	7.5	ø45 x 15		40	0.04	4–V–N324–90790	931079360000	––
08	35.7	29	22.225	10.5	ø40 x 18		40	0.05	4–V–N326–90790	931079350000	––
07	57.9	48	38.1	5	ø63 x 12		40	0.058	4–V–N392–90790	931079340000	––
06	51.6	43	34.925	10	ø55 x 17		40	0.088	4–V–N362–90790	931079330000	––
05	48.4	40	31.75	12	ø52 x 20		40	0.098	4–V–N325–90790	931079320000	––
04	45.2	37	28.575	20	ø50 x 27		40	0.15	4–V–N219–90790	931079310000	––
03	38.9	32	25.4	9.5	ø45 x 17		40	0.05	4–V–N318–90790	931079300000	––
02	32.5	28	19.05	11	ø36 x 18		40	0.05	4–V–N259–90790	931079290000	––
01	32.5	28	19.05	3	ø36 x 10		40	0.013	4–V–N434–90790	931079280000	––

BHARAT HEAVY ELECTRICALS LTD.,
UNIT: HIGH PRESSURE BOILER PLANT.
TIRUCHIRAPALLI 620014.

365–122 CM

	NAME	SIGN	DATE	NO.OF VAR
DRN	T.R.R.MURTHY		17.04.97	
CHD	N.DHANAPAL		17.04.97	
APPD	A.VISWANATHAN		17.04.97	

DEPT	SCALE	WEIGHT (KG).	REFERENCE INFORMATIONS	NO. OF ITEMS
VL / CODE 320	NTS	REF.TABLE	CAD: C490790	

TITLE	CARD CODE	DRAWING NO.	REV
SPACER	U 01	4–V–0000–90790	06

Size A4

CAUTION: The information on this document is the property of BHARAT HEAVY ELECTRICALS LTD. It must not be used directly or indirectly in any way detrimental to the interest of the company.

ALL DIMENSIONS ARE IN MILLIMETRES.

FOR TOLERANCES OF UNTOLERANCED DIMENSIONS DURING MANUFACTURE REFER RELEVANT QCP/QP

REV	DATE	ALTERED	R.P.SINGH
06	07.11.19	CHD & APPD	SAMEER & SSK

SL.No. 12 INCLUDED

CAUTION: The information on this document is the property of BHARAT HEAVY ELECTRICALS LTD. It must not be used directly or indirectly in any way detrimental to the interest of the company.

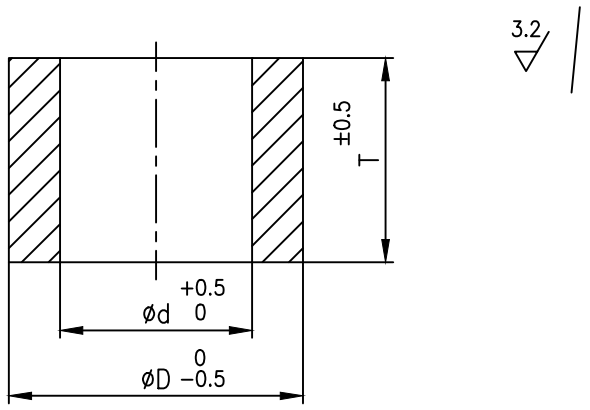

SL.No.	DRAWING No. / COMPONENT CODE	SPECN.	CODE	SUGG. SIZE	HEAT TREAT	WT.IN Kgs.	SCRAP SORT	ØD	Ød	T	WT. (Kgs)
		RAW MATL DETAIL						DIMENSIONS			
12	4.V.F810.06937 / 93 205 641 0000	A182−F316 CERTIFY	−	DIA 40x52	SH	0.51	46	38.90	25.40	48.0	0.26
11	4.V.F921.06937 / 93 203 217 0000	A276−410 CERTIFY	−	DIA 40x52	NORMALISED & TEMPERED	0.51	40	38.90	25.40	48.0	0.26
10	4.V.F889.06937 / 93 202 270 0000	A276−410 CERTIFY	−	DIA 63x62	NORMALISED & TEMPERED	1.60	40	61.10	41.30	58.0	0.80
09	4.V.F510.06937 / 93 201 618 0000	A276−410 CERTIFY	−	DIA 76x80	NORMALISED & TEMPERED	2.9	40	73.8	50.8	76.0	1.3
08	4.V.F520.06937 / 93 130 534 0000	A276−410 CERTIFY	−	DIA 38x50	NORMALISED & TEMPERED	0.45	40	35.70	22.23	42	0.20
07	4.V.F507.06937 / 93 167 191 0000	A182−F6 CERTIFY	−	DIA 76x80	NORMALISED & TEMPERED	2.90	40	73.80	50.80	76.0	1.30
06	4.V.F506.06937 / 93 167 190 0000	A182−F6 CERTIFY	−	DIA 70x70	NORMALISED & TEMPERED	2.10	40	67.50	47.60	65.0	0.90
05	4.V.F505.06937 / 93 167 189 0000	A182−F6 CERTIFY	−	DIA 63x62	NORMALISED & TEMPERED	1.60	40	61.10	41.30	58.0	0.80
04	4.V.F504.06937 / 93 167 188 0000	A182−F6 CERTIFY	−	DIA 60x70	NORMALISED & TEMPERED	1.60	40	57.90	38.10	66.0	0.80
03	4.V.F503.06937 / 93 167 092 0000	A182−F6 CERTIFY	−	DIA 47x58	NORMALISED & TEMPERED	0.80	40	45.20	28.60	54.0	0.41
02	4.V.F502.06937 / 93 167 091 0000	A182−F6 CERTIFY	−	DIA 40x52	NORMALISED & TEMPERED	0.51	40	38.90	25.40	48.0	0.26
01	4.V.F501.06937 / 93 110 776 0000	A182−F6 CERTIFY	−	DIA 38x50	NORMALISED & TEMPERED	0.45	40	35.70	22.23	42	0.20

NO OF	DESCRIPTION	MATL CODE	MATL SPECN	HEAT TREATMENT	SCRAP SORT	NET WT (kg)	GROSS WT (kg)	DRAWING No	ITEM No
−	−	−	−	−	−	−	−	−	−

BHARAT HEAVY ELECTRICALS LTD.,
UNIT: HIGH PRESSURE BOILER PLANT.
TIRUCHIRAPALLI 620014.
365−122

	NAME	SIGN	DATE	NO.OF VAR
DRN	M.SRINIVASAN		10.03.03	
CHD	P.BOOMINATHAN		10.03.03	
APPD	K.SAKETHARAMAN		10.03.03	

DEPT	CODE	SCALE	WEIGHT (KG).	REFERENCE INFORMATIONS	NO. OF ITEMS
VL	320	NTS	REF TABLE	DRG RETRACED WITH REV.05 ON 29.10.13 CAD C406937	

TITLE	CARD CODE	DRAWING NO.	REV
SPACER	U 01	4−V−0000−06937	06

Size A4

ALL DIMENSIONS ARE IN MILLIMETRES.

FOR TOLERANCES OF UNTOLERANCED DIMENSIONS DURING MANUFACTURE REFER RELEVANT QCP/QP

REV	DATE	ALTERED	R.P.SINGH
06	25.12.17	CHD & APPD	SSK & KRS

SL No. 17 INCLUDED

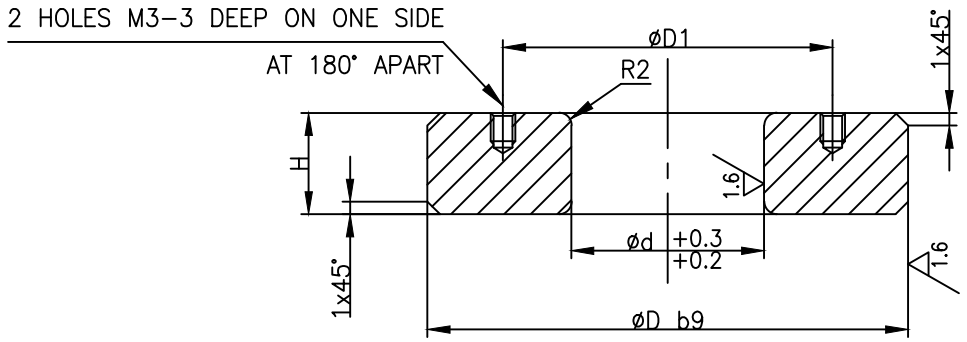

øD	b9
30 to 40	−0.170
	−0.232
40 to 50	−0.180
	−0.242
50 to 65	−0.190
	−0.264

NOTE:-

HARDNESS 22 HRC MAX. FOR SL.No.15 & 16 ONLY.

DRAWING RETRACED WITH REV. 03 ON 12.06.01

SL No.	øD	øD1	ød	H	SUGGESTED SIZE	MATERIAL SPECEN.	SCRAP SORT	NET WT (kg)	DRAWING NUMBER	COMP CODE	ITEM No
	DIMENSIONS										
17	48.4	40	31.75	20	ø52 x 30	SNIK AG, CERTIFY	40	0.164	4-V-NP35-90789	932042220000	--
16	45.2	37	28.575	38	ø50 x 46	A276-410 NT, CERTIFY	40	0.310	4-V-N112-90789	931101200000	--
15	28	22	16	9	ø32 x 15	A276-410 DOUBLE TEMPERED,CERTIY	40	0.030	4-V-T419-90789	931081870000	--
14	61.1	51	41.275	34	ø63 x 45	ASTM A276 Gr.410 CERTIFY, NT	40	0.380	4-V-N214-90789	931079270000	--
13	61.1	51	41.275	30	ø63 x 40		40	0.375	4-V-N213-90789	931079090000	--
12	51.6	43	34.925	28	ø55 x 38		40	0.25	4-V-N212-90789	931079080000	--
11	48.4	40	31.75	38	ø52 x 48		40	0.313	4-V-N211-90789	931079070000	--
10	38.9	32	25.4	18	ø45 x 25		40	0.096	4-V-N210-90789	931079060000	--
09	35.7	29	22.225	25	ø40 x 35		40	0.120	4-V-N209-90789	931079050000	--
08	32.5	28	19.05	29	ø36 x 38		40	0.124	4-V-N208-90789	931079040000	--
07	57.9	48	38.1	21	ø63 x 30		40	0.246	4-V-N207-90789	931079030000	--
06	51.6	43	34.925	30	ø55 x 40		40	0.267	4-V-N206-90789	931079020000	--
05	48.4	40	31.75	20	ø52 x 30		40	0.164	4-V-N205-90789	931079010000	--
04	45.2	37	28.575	30	ø50 x 38		40	0.227	4-V-N204-90789	931079000000	--
03	38.9	32	25.4	25	ø45 x 32		40	0.134	4-V-N203-90789	931078990000	--
02	35.7	29	22.225	13	ø40 x 20		40	0.063	4-V-N202-90789	931078980000	--
01	32.5	28	19.05	18	ø36 x 25		40	0.077	4-V-N201-90789	931078970000	--

BHARAT HEAVY ELECTRICALS LTD.,
UNIT: HIGH PRESSURE BOILER PLANT.
TIRUCHIRAPALLI 620014.

365-122 CM

	NAME	SIGN	DATE	NO.OF VAR
DRN	K.P.LEON		12.06.01	
CHD	T.R.R.MURTHY		12.06.01	
APPD	P.BOOMINATHAN		12.06.01	

DEPT	SCALE	WEIGHT (KG).	REFERENCE INFORMATIONS	NO. OF ITEMS
VL	NTS	REF.TABLE	CAD: C490789	
CODE 320				

TITLE	CARD CODE	DRAWING NO.	REV
SPACER	U 01	4-V-0000-90789	06

Size A4

CAUTION: The information on this document is the property of BHARAT HEAVY ELECTRICALS LTD. It must not be used directly or indirectly in any way detrimental to the interest of the company.

ALL DIMENSIONS ARE IN MILLIMETRES.

FOR TOLERANCES OF UNTOLERANCED DIMENSIONS DURING MANUFACTURE REFER RELEVANT QCP/QP

CAUTION: The information on this document is the property of BHARAT HEAVY ELECTRICALS LTD. It must not be used directly or indirectly in any way detrimental to the interest of the company.

REV	DATE	ALTERED	R.P.SINGH
01	17.10.19	CHD & APPD	SAMEER & SSK

SL. No. 08 TO 16 INCLUDED.

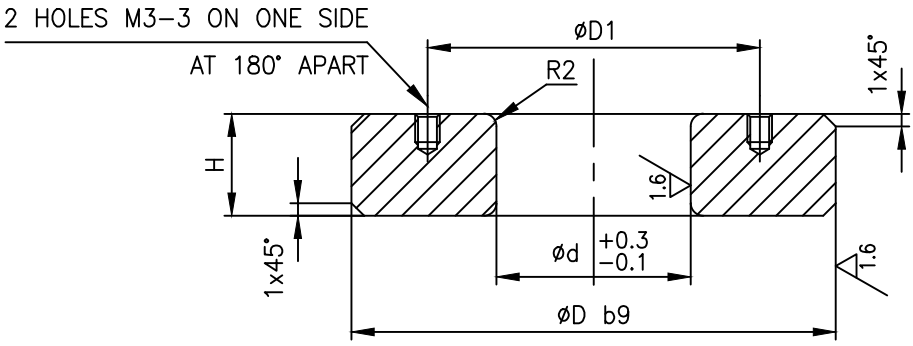

øD	b9
30 to 40	−0.170
	−0.232
40 to 50	−0.180
	−0.242
50 to 65	−0.190
	−0.264
65 to 80	−0.200
	−0.278
80 to 100	−0.220
	−0.304

SL No.	øD	øD1	ød	H	SUGGESTED SIZE	MATERIAL SPECEN.	SCRAP SORT	NET WT (kg)	DRAWING NUMBER	COMP CODE	ITEM No
	DIMENSIONS										
16	38.9	32	25.4	18	ø45 x 25	SA 182 – F316 CERTIFY, SH	46	0.13	4-V-NK79-90872	932056420000	--
15	35.7	29	22.225	25	ø40 x 35		46	0.12	4-V-NK62-90872	932056330000	--
14	32.5	28	19.05	18	ø36 x 25		46	0.077	4-V-NK01-90872	932056170000	--
13	40	32	24	20	ø45 x 25		46	0.13	4-V-P770-90872	932055720000	--
12	87	74.5	62	71	ø90 x 79		46	1.627	4-V-P729-90872	932055700000	--
11	79	67	55	60	ø80 x 70		46	1.185	4-V-P728-90872	932055690000	--
10	64	54	44	15	ø68 x 23		46	0.20	4-V-P727-90872	932055680000	--
09	52	44	36	16.5	ø55 x 25		46	0.14	4-V-P726-90872	932055670000	--
08	44	36	28	15.5	ø50 x 23		46	0.11	4-V-P725-90872	932055660000	--
07	57.9	48	38.10	9.0	ø63 x 15		46	0.246	4-V-K961-90872	931091850000	2502
06	51.6	43	34.925	31.0	ø55 x 40		46	0.267	4-V-K960-90872	931091840000	2502
05	48.4	40	31.75	20.0	ø52 x 30		46	0.164	4-V-K843-90872	931091830000	2502
04	45.2	37	28.575	30.0	ø50 x 38		46	0.227	4-V-K803-90872	931091820000	2502
03	38.9	32	25.40	25.0	ø45 x 32		46	0.134	4-V-K770-90872	931091810000	2502
02	35.7	29	22.225	13.0	ø40 x 20		46	0.063	4-V-K784-90872	931091800000	2502
01	32.5	28	19.05	6.0	ø36 x 12		46	0.026	4-V-K880-90872	931091790000	2502

BHARAT HEAVY ELECTRICALS LTD.
UNIT: HIGH PRESSURE BOILER PLANT.
TIRUCHIRAPALLI 620014.
365-122 CM

	NAME	SIGN	DATE	NO.OF VAR
DRN	K.P.LEON		17.12.98	
CHD	N.DHANAPAL		17.12.98	
APPD	K.S.RAMAN		17.12.98	

DEPT	SCALE	WEIGHT (KG).	REFERENCE INFORMATIONS	NO. OF ITEMS
VL	NTS	REF.TABLE	CAD: C490872	
CODE 320				

TITLE	CARD CODE	DRAWING NO.	REV
BUSHING	U 01	4-V-0000-90872	01

Size A4

DRAWING NO. 2-V-0000-15452/9

ALL DIMENSIONS ARE IN MILLIMETRES. FOR TOLERANCES OF UNTOLERANCED DIMENSIONS DURING MANUFACTURE REFER RELEVANT QCP / QP

SL No.	DRAWING No. / COMP. CODE	MATL. SPECN	SUGGESTED SIZE / MATL. CODE	GROSS WT(kg) / SCRAP SORT	TOA DRG No.	ØD1 b9	ØD2	ØD3 b9 [DIMEN. PRIOR TO PLATING]	TW-N 7e LEFT	ØD4	ØD5	ØD6	ØD7	L	L1	L2	L3	L4	L5	L6	L7	L8	L9	L10	L11	L12	L13	L14	RA	RB	RC	W1	T1	θ1°	θ2°		NET WT (kg)
1	2-V-R105-15452/3 93 115 061 0000	OHTARAN, QT, PRODUCT ATTEST	ø50x730 15 924 463	11.25 40	4-E67177 (2203)	45 −0.180 −0.242	32	30 −0.160 −0.212 [−0.190 −0.242]	TW 30-6	29 +0.2 −0.1	25	41	46	710	81.1	56.6	572.3	80.4	5	240	24	115	83.2	6.5	67	5	4	8.5	1	5	3	7	4	30°	30°		4.2
2	2-V-R089-15452/5 93 115 062 0000		ø50x730 15 924 463	11.25 40	4-E66942 (2229)	45 −0.180 −0.242	32	30 −0.160 −0.212 [−0.190 −0.242]	TW 30-6	29 +0.2 −0.1	25	41	46	710	56.8	70.1	583.1	55	35	270	24	9 170	58.5	6.5	8 82	35	4	8.5	8 3	5	3	7	4	40°	40°		4.3
3	2-V-R097-15452/4 93 115 053 0000		ø65x883 –	23.0 40	4-E81457 (2226)	60 −0.190 −0.264	44	42 −0.180 −0.242 [−0.210 −0.272]	TW 42-3.5	41 +0.2 −0.1	34	56	61	863	77.2	86.5	699.3	75.5	35	360	26	175	82.2	8.0	8 102	35	6	14.5	8 3	5	3	12	4.5	40°	40°		10.2
4	2-V-R133-15452/3 93 115 725 0000		ø50x790 15 924 463	12.2 40	4-E76351 (2467)	46 −0.180 −0.242	36	34 −0.170 −0.232 [−0.200 −0.272]	TW 34-4	33.5 +0.2 −0.1	27	42	47	770	58.6	92.2	619.2	57	47	265	25	140	60.6	5.0	95	47	4	12.5	2	5	3	10	4.5	40°	40°		6.0
5	2-V-R189-15452/3 93 116 080 0000		ø50x610 15 924 463	9.41 40	4-E67198	45 −0.180 −0.242	32	30 −0.160 −0.212 [−0.190 −0.242]	TW 30-6	29 +0.2 −0.1	25	41	46	590	57.2	83.6	449.2	55.5	29	135	24	125	59.0	6.5	77	29	4	8.5	2.5	5	2	7	4	40°	40°		3.64
6	2-V-R197-15452/2 93 116 539 0000		ø50x610 15 924 463	9.41 40	4-E67177	45 −0.180 −0.242	32	30 −0.160 −0.212 [−0.190 −0.242]	TW 30-6	29 +0.2 −0.1	25	41	46	590	81.1	62.9	446	80.4	5	130	24	120	83.2	6.5	67	5	4	8.5	1	5	3	7	4	30°	30°		3.5
7	2-V-R205-15452/2 93 116 624 0000		ø50x780 15 924 463	12.03 40	–	46 −0.180 −0.242	36	34 −0.170 −0.232 [−0.200 −0.272]	TW 34-4	33.5 +0.2 −0.1	27	42	47	760	58.6	83.8	617.6	57	47	305	25	170	60.6	5.0	95	47	4	12.5	2	5	3	10	4.5	40°	40°		5.9
8	2-V-R100-15452/3 93 116 640 0000		ø65x670 –	17.47 40	–	60 −0.190 −0.264	44	42 −0.180 −0.242 [−0.210 −0.272]	TW 42-3.5	41 +0.2 −0.1	34	56	61	653	77.2	86.5	489.3	75.5	35	171	26	167	82.2	8.0	8 102	35	6	14.5	8 3	5	3	12	4.5	40°	40°		8.0

8

DETAIL – A

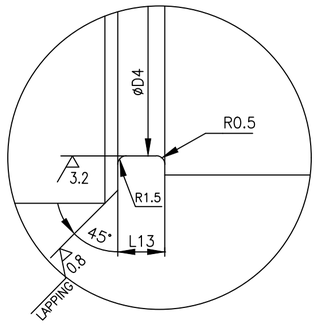

THE ABOVE UNDERCUT SHALL BE SMOOTHLY FINISHED. SO THAT THE CUT SHOULD NOT BE NOTCH EFFECTED.

DETAIL – B

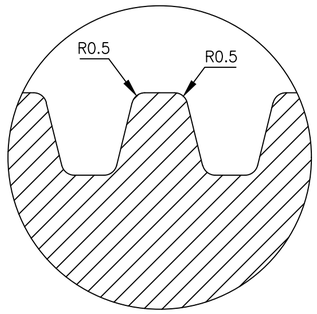

ALTERNATE TO DETAIL–C

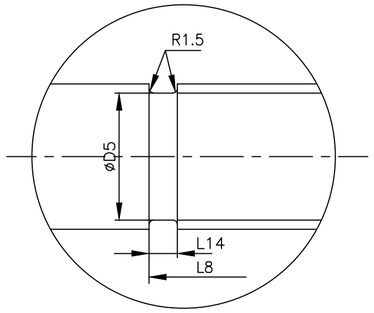

SECTION–EE

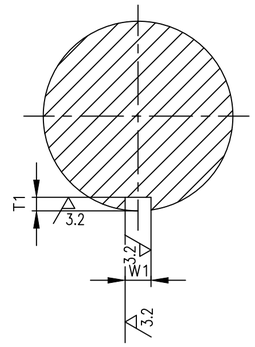

SECTION–FF

12.5 / 3.2 / 0.8 / 0.4

6

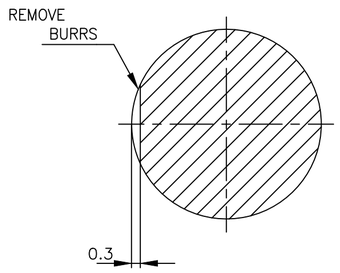

BEFORE STELLITING

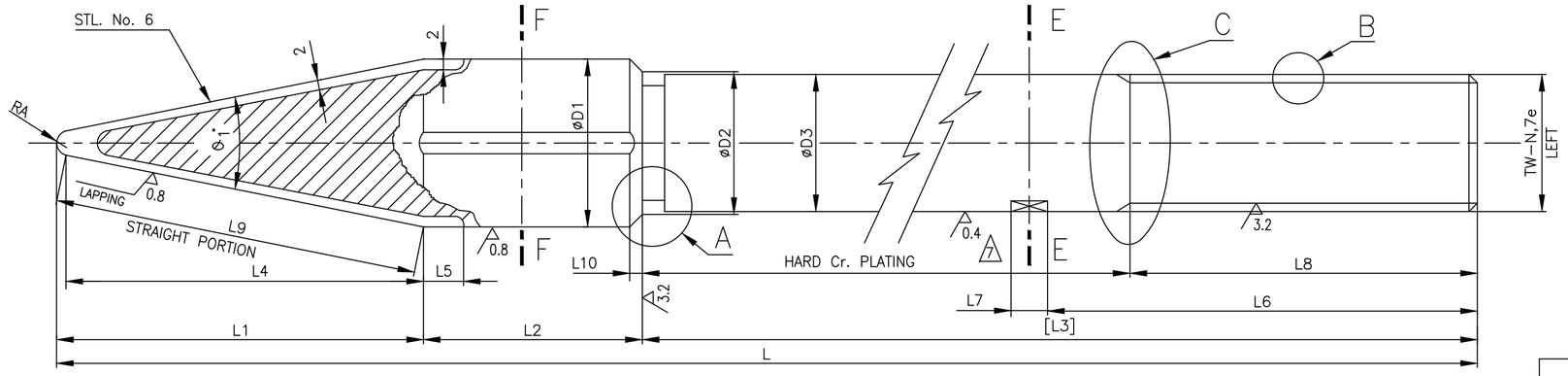

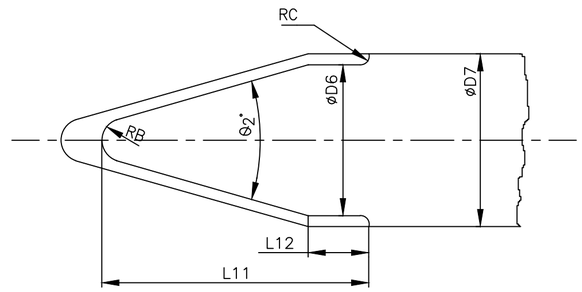

NOTES

1. HARDNESS:– 241 TO 321 BHN.
2. MATERIAL SHOULD BE AS PER LATEST APPLICABLE QUALITY WORK INSTRUCTION

REV	DATE	ALTERED / CHD & APPD	ZONE	
9	21.04.17	ALTERED T.SANGEETHA CHD & APPD SSK & KRS	9	IN SL.NO 2 R089 L8 170 WAS 140 DCP No.802230
8	14.11.13	ALTERED VB CHD & APPD SSK & KRS		IN SL.Nos.02,03 &08, DIMENSIONS 82,102 & 3 WERE 72,92 & 2 RESPECTIVELY. DCP No.801639
7	24.12.03	ALTERED VB CHD & APPD MRK	7	SURFACE FINISH 0.4 / WAS 0.8 / DCP.No.800270

CAUTION: The information on this document is the property of BHARAT HEAVY ELECTRICALS LTD. It must not be used directly or indirectly in any way detrimental to the interest of the company.

No OFF	DESCRIPTION	MATL CODE	MATL SPECN	HEAT TREATMENT	SCRAP SORT	NET WT (kg)	GROSS WT (kg)	DRAWING No	ITEM No

TYPE OF PRODUCT OR NAME OF CUSTOMER/PROJECT: TA

RETRACED WITH REV.7 ON 24.12.03

BHARAT HEAVY ELECTRICALS LTD.,
UNIT: HIGH PRESSURE BOILER PLANT.
TIRUCHIRAPALLI -620014.
365-120

	NAME	SIGN	DATE	NO.OF VAR.
DRN	V.BAIRAVAN		24.12.03	
CHD	K.RAJASEKRAN		24.12.03	
APPD	M.RAJAKUMAR		24.12.03	

DEPT VL
CODE 320
SCALE N T S
WEIGHT (KG).
REFERENCE INFORMATIONS
NO. OF ITEMS

TITLE: STEM
CARD CODE: U 01
DRAWING NO. 2-V-0000-15452
REV 9

Size A2

ALL DIMENSIONS ARE IN MILLIMETRES. FOR TOLERANCES OF UNTOLERANCED DIMENSIONS DURING MANUFACTURE REFER RELEVANT QCP / QP.

DRAWING NO: 3-V-0000-17472

12.5 / 3.2 / 0.4

SL. No.	DRG. No.	COMP. CODE	MATL. SPECN		SCRAP SORT	ØD-b9	ØD1	L	L1	L2	L3	L4	L5	RG	L6	C	ØU	ØU1	DIA INCH-N ACME-2G-LEFT	FINISHED Wt.(kg)	SIZE/ RATING
1	3-V-N277-17472/04	93 105 750 0000	SA 182-F316 SH	CERTIFY	46	19.050	28	320	31	18.5	10	14.5	150	60	20.0	2	13.6	13	0.75" -6 ACME	0.72	2"-C150 & C300
2	3-V-N286-17472/05	93 105 751 0000			46	22.225	32	383	41	29.0	16	14.5	155	70	25.5	3	15.9	13	0.875"-5 ACME	1.29	3"-C150
3	3-V-N282-17472/05	93 105 869 0000	SA182-F6a cl.3 HT		40	22.225	32	448	41	29.0	16	14.5	217	70	25.5	3	15.9	13	0.875"-5 ACME	1.42	3"-C300 (MO)FAB
4	3-V-N429-17472/05	93 106 286 0000			40	22.225	32	418	41	29.0	16	14.5	186	70	25.5	3	15.9	13	0.875"-5 ACME	1.35	3"-C300 (MO SG)
5	3-V-N357-17472/05	93 106 450 0000			40	22.225	32	408	41	29.0	16	14.5	190	70	25.5	3	15.9	13	0.875"-5 ACME	1.30	3"-C150 SG MO
6	3-V-N537-17472/04	93 106 836 0000			40	19.050	28	356	31	18.5	10	14.5	164	60	20.0	2	13.6	13	0.75" -6 ACME	1.28	2"-C150 & C300
7	3-V-N434-17472/04	93 107 968 0000			40	19.050	28	356	31	18.5	10	14.5	144	60	20.0	2	13.6	13	0.75" -6 ACME	1.28	2"-C150
8	3-V-N364-17472/05	93 106 923 0000	SA 182-F316 SH		46	22.225	32	392	41	29.0	16	14.5	163	70	25.5	3	15.9	13	0.875"-5 ACME	1.31	3"-C300 HW
9	3-V-N342-17472/04	93 107 831 0000			46	19.050	28	356	31	18.5	10	14.5	164	60	20.0	2	13.6	13	0.75" -6 ACME	1.28	2"-C150 & C300
10	3-V-N472-17472/04	93 107 960 0000			46	19.050	28	356	31	18.5	10	14.5	144	60	20.0	2	13.6	13	0.75" -6 ACME	1.28	2"-C150
11	3-V-N338-17472/05	93 107 969 0000			46	22.225	32	408	41	29.0	16	14.5	190	70	25.5	3	15.9	13	0.875"-5 ACME	1.31	3"-C150
12	3-V-N373-17472/06	93 108 076 0000			46	22.225	32	418	41	29.0	16	14.5	186	70	25.5	3	15.9	13	0.875"-5 ACME	1.35	3"-C300
13	3-V-K993-17472/03	93 109 642 0000	SA182-F6a cl.3 HT		40	22.225	32	418	41	29.0	16	14.5	186	70	25.5	3	15.9	13	0.875"-5 ACME	1.35	3"-C300 MO (SPF)
14	3-V-K995-17472/03	93 109 643 0000			40	22.225	32	408	41	29.0	16	14.5	190	70	25.5	3	15.9	13	0.875"-5 ACME	1.30	3"-C150 MO (SPF)
15	3-V-NK66-17472/01	93 205 298 0000	SA 182-F60, SH		46	22.225	32	408	41	29.0	16	14.5	190	70	25.5	3	15.9	13	0.875"-5 ACME	1.30	3"-C150
16	3-V-NP45-17472/01	93 205 661 0000	SA182-F316, SH		46	19.050	28	380	31	18.5	10	14.5	180	60	20.0	2	13.6	13	0.75" -6 ACME	0.85	2 1/2"-C150
17	3-V-NP43-17472/01	93 205 953 0000	SA182-F6a cl3, HT		40	19.050	28	380	31	18.5	10	14.5	180	60	20.0	2	13.6	13	0.75" -6 ACME	0.85	2 1/2"-C150

ABOVE & INCLUDING	b9
ø18-ø30	-0.160
	-0.212
ø30-ø40	-0.172
	-0.232
ø40-ø50	-0.180
	-0.242

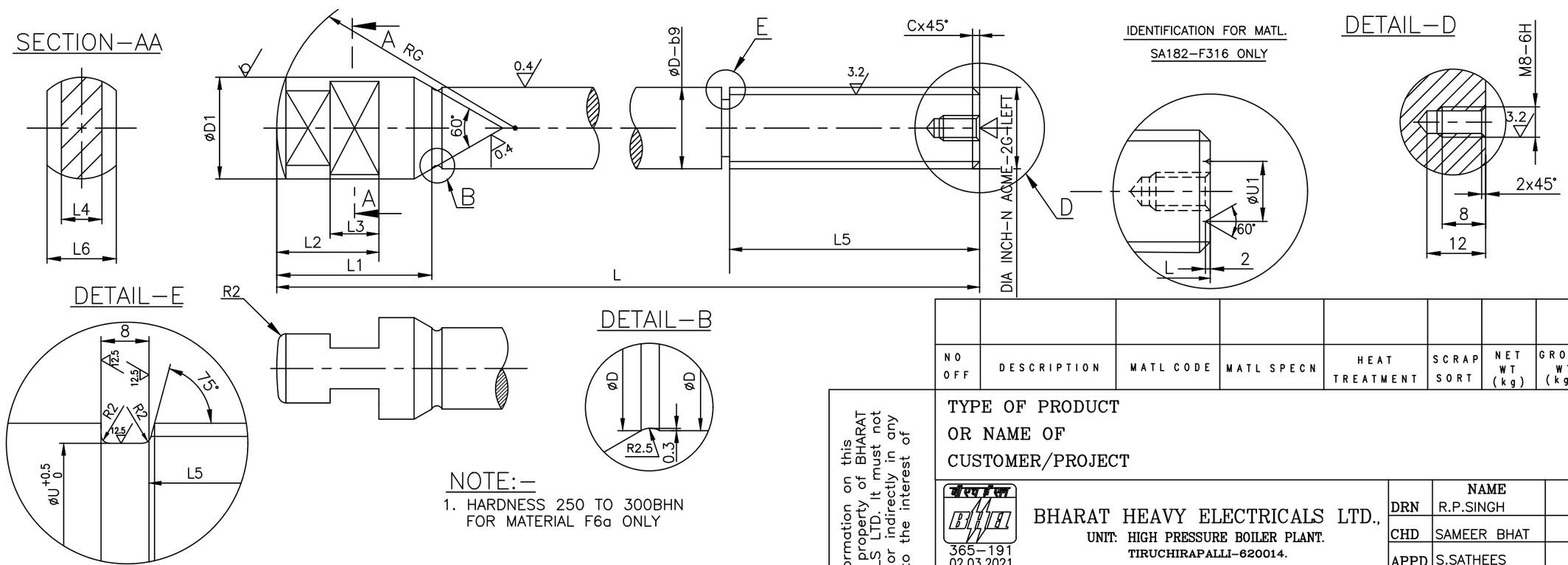

NOTE:-

1. HARDNESS 250 TO 300BHN FOR MATERIAL F6a ONLY

DCP No.	ALTD: RPS	APPD: SSK
-	CHD: MK	DT: 27.11.23

REV	
19	THREADED HOLE INCLUDED INDETAIL-D.
ZONE -	

CAUTION: The information on this document is the property of BHARAT HEAVY ELECTRICALS LTD. It must not be used directly or indirectly in any way detrimental to the interest of the company.

NO OF	DESCRIPTION	MATL CODE	MATL SPECN	HEAT TREATMENT	SCRAP SORT	NET WT (kg)	GROSS WT (kg)	DRAWING No. / COMP. CODE	ITEM No

TYPE OF PRODUCT
OR NAME OF
CUSTOMER/PROJECT

draft BHEL 365-191 02.03.2021

BHARAT HEAVY ELECTRICALS LTD.,
UNIT: HIGH PRESSURE BOILER PLANT.
TIRUCHIRAPALLI-620014.

	NAME	SIGN	DATE	NO.OF VAR.
DRN	R.P.SINGH		20.04.21	—
CHD	SAMEER BHAT		20.04.21	
APPD	S.SATHEES		20.04.21	

DEPT	SCALE	WEIGHT (KG).	REFERENCE INFORMATIONS	NO. OF ITEMS
VL	NTS	REF. TABLE		—
CODE 320				

TITLE	CARD CODE	DRAWING NO.	REV
STEM	U 01	3-V-0000-17472	19

Size A3

DRAWING NO. 2-V-0000-01813

ALL DIMENSIONS ARE IN MILLIMETRES. FOR TOLERANCES OF UNTOLERANCED DIMENSIONS DURING MANUFACTURE REFER RELEVANT QCP / QP

SL No	DRAWING NO	COMP. CODE	MATE. SPECN	NET WT WT(kg)	HEATREAT SCARP SORT	TrxP 9C	øD	øD1 h8	øD2 BEFORE PLATING	øD2 FINAL	øD3	sqh11	M-6g	L	L1	L2	L3	L4	L5	L6	øD4	Tx45°	APPLICABLE VALVE TYPE
01	2-V-2476-01813/10	930589670000	A182-F6a cl.3. CERTIFY	1.45	H & T / 40	Tr.24x3	38	30	--	$24^{-0.065}_{-0.195}$	10	18,4	M12	375	148	32	10	22	30	3	20	3	2"-300C SV
02	2-V-2478-01813/10	930589720000		2.39	H & T / 40	Tr.28x3	46	36	--	$28^{-0.065}_{-0.195}$	13.5	21.4	M16	435	174	61	11	24	35	4	24	4	3"-300C SV
03	2-V-2479-01813/09	930587620000		2.61	H & T / 40	Tr.28x3	46	36	--	$28^{-0.065}_{-0.195}$	13.5	21.4	M16	470	189	83	11	24	35	4	24		4"-300C SV
04	2-V-2480-01813/06	930591440000		4.86	H & T / 40	Tr.36x3	58	44	--	$36^{-0.080}_{-0.240}$	16.5	27.5	M20	588	245	113	13	28	45	5	32		6"-300C SV
~~05~~	~~2-V-2481-01813/07~~	~~930594260000~~		~~5.87~~	H & T / 40	~~Tr.40x3~~	~~63~~	~~48~~		~~40~~	~~19.5~~	~~30.5~~	~~M24~~	~~660~~	~~260~~	~~128~~	~~15~~	~~32~~	~~50~~	~~6~~	~~36~~		~~8"-300C SV~~
06	2-V-P295-01813/03	931061090000	OHTARON CERTIFY	2.39	Q & T / 40	Tr.28x3	46	36	$28^{-0.095}_{-0.225}$	$28^{-0.065}_{-0.195}$	13.5	21.4	M16	435	180	56	11	24	35	4	24		3"-300C RV
07	2-V-P296-01813/04	931061100000		2.61	Q & T / 40	Tr.28x3	46	36	$28^{-0.095}_{-0.225}$	$28^{-0.065}_{-0.195}$	13.5	21.4	M16	470	180	90	11	24	35	4	24		4"-300C RV
08	2-V-P300-01813/03	931061110000		4.86	Q & T / 40	Tr.36x3	58	44	$36^{-0.110}_{-0.270}$	$36^{-0.080}_{-0.240}$	16.5	27.5	M20	588	245	113	13	28	45	5	32		6"-300C SV
~~09~~	~~2-V-P311-01813/01~~	~~931061120000~~		~~5.87~~	Q & T / 40	~~Tr.40x3~~	~~63~~	~~48~~		~~40~~	~~19.5~~	~~30.5~~	~~M24~~	~~660~~	~~260~~	~~128~~	~~15~~	~~32~~	~~50~~	~~6~~	~~36~~		~~8"-300C SV~~
10	2-V-P299-01813/03	931061360000		2.61	Q & T / 40	Tr.28x3	46	36	$28^{-0.095}_{-0.225}$	$28^{-0.065}_{-0.195}$	13.5	21.4	M16	470	189	83	11	24	35	4	24		4"-300C SV
11	2-V-2927-01813/03	931066600000	SA182 Gr.F316 CERTIFY	5.50	SH / 46	Tr.36x3	58	44	--	$36^{-0.080}_{-0.240}$	16.5	27.5	M20	668	325	113	13	28	45	5	32		6"-300C SV
12	2-V-2891-01813/03	931071270000		2.39	SH / 46	Tr.28x3	46	36	--	$28^{-0.065}_{-0.195}$	13.5	21.4	M16	435	174	61	11	24	35	4	24		3"-300C SV
13	2-V-P336-01813/02	931080000000		2.61	SH / 46	Tr.28x3	46	36	--	$28^{-0.065}_{-0.195}$	13.5	21.4	M16	470	189	83	11	24	35	4	24		4"-300C SV
14	2-V-K875-01813/02	931082930000	A182-F6a cl.3. CERTIFY	5.20	H & T / 40	Tr.36x3	58	44	--	$36^{-0.080}_{-0.240}$	16.5	27.5	M20	640	297	113	13	28	45	5	32		4"-300C SV
15	2-V-P339-01813/02	931084030000	SA182 Gr.F316 CERTIFY	1.45	SH / 46	Tr.24x3	38	30	--	$24^{-0.065}_{-0.195}$	10	18.4	M12	375	148	32	10	22	30	3	20	3	2"-300C SV
16	2-V-P342-01813/02	931088130000		2.66	SH / 46	Tr.28x3	46	36	--	$28^{-0.065}_{-0.195}$	13.5	21.4	M16	435	180	56	11	24	35	4	24	4	3"-300C RV
17	2-V-K919-01813/02	931088140000		2.91	SH / 46	Tr.28x3	46	36	--	$28^{-0.065}_{-0.195}$	13.5	21.4	M16	490	235	56	11	24	35	4	24		3"-300C RV (IND)
18	2-V-P354-01813/02	931090010000	OHTARON CERTIFY	1.45	Q & T / 46	Tr.24x3	38	30	$24^{-0.095}_{-0.225}$	$24^{-0.065}_{-0.195}$	10	18.4	M12	375	148	32	10	22	30	3	20	3	2"-300C SV&RV
19	2-V-U166-01813/03	931105860000	SA182 Gr.F316 CERTIFY	2.61	SH / 46	Tr.28x3	46	36	--	$28^{-0.065}_{-0.195}$	13.5	21.4	M16	537	247	90	11	24	35	4	24	4	4"-300C RV (CF8-IND)
20	2-V-U303-01813/01	931305400000		2.91	SH / 46	Tr.28x3	46	36	--	$28^{-0.065}_{-0.195}$	13.5	21.4	M16	490	235	56	11	24	35	4	24		3"-300C SV (CF8M-IND)
21	2-V-P481-01813/01	931309990000	OHTARON CERTIFY	2.39	Q & T / 40	Tr.28x3	46	36	$28^{-0.095}_{-0.225}$	$28^{-0.065}_{-0.195}$	13.5	21.4	M16	435	174	61	11	24	35	4	24		3"-300C SV
22	2-V-P621-01813	932039460000		5.50	Q & T / 40	Tr.36x3	58	44	--	$36^{-0.080}_{-0.240}$	16.5	27.5	M20	668	325	113	13	28	45	5	32		6"-300C SV
23	2-V-U584-01813	932040360000	SA182 F316 CERTIFY	1.60	SH / 46	Tr.24x3	38	30	--	$24^{-0.065}_{-0.195}$	10	18.4	M12	420	193	32	10	22	30	3	20	3	2"-300C SV
24	2-V-U904-01813	932052460000	SA182 Gr.F60 CERTIFY	2.61	SH / 46	Tr.28x3	46	36	--	$28^{-0.065}_{-0.195}$	13.5	21.4	M16	537	247	90	11	24	35	4	24	4	4"-300C SV (F60-IND)

18.1 – 30.0 h11	0 / −0.130
30.1 – 50.0 h11	0 / −0.160
30 – 49 h8	0 / −0.039

DETAIL-X

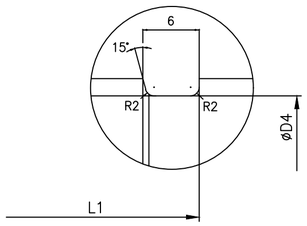

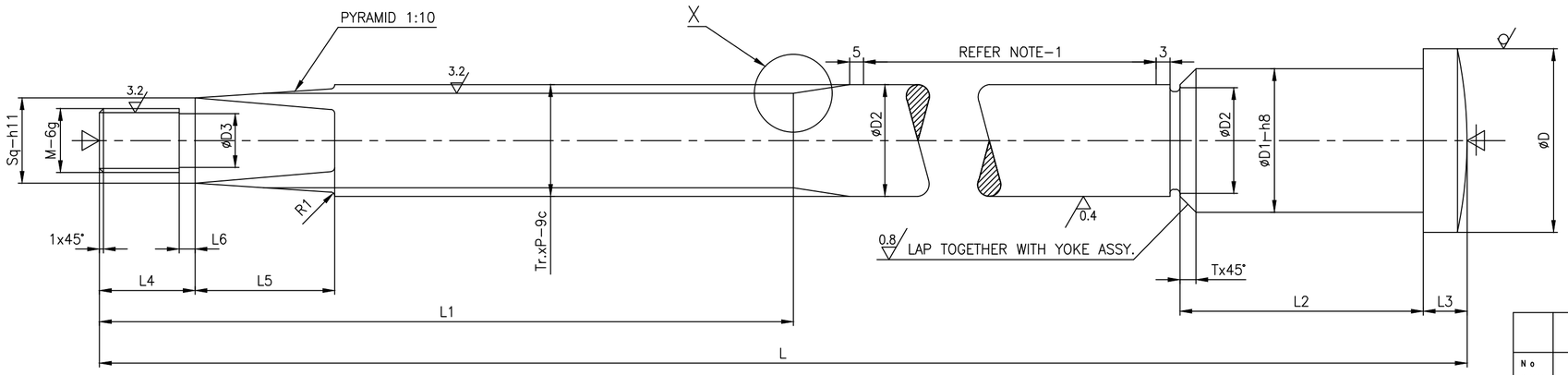

NOTES:-

1. CHROME PLATING TO BE DONE TO A DEPTH OF 30 MICRONS FOR OHTARON MATL.ONLY.
2. HARDNESS FOR A182 F6a.cl3 MATL. : 252 TO 311 BHN.
3. HARDNESS FOR OHTARON MATL. : 241 TO 321 BHN.
4. HARDNESS FOR F316 MATL. : 235 BHN.

No OFF	DESCRIPTION	MATL CODE	MATL SPECN	HEAT TREATMENT	SCRAP SORT	NET WT (kg)	GROSS WT (kg)	DRAWING No	ITEM No

REV	DATE	ALTERED	
29	04.03.19	ALTERED R.P.SINGH / CHD & APPD SSK & KRS	SL.No. 24 INCLUDED.
28	17.11.16	ALTERED R.ANITHA / CHD & APPD SSK & KRS	P296 & U166 L1 MODIFIED
27	14.06.16	ALTERED K.NAVIN / CHD & APPD MS & SSK	SL.No. 23 INCLUDED
26	03.11.15	ALTERED M.SELVAM / CHD & APPD MS & SSK	SL. No. 22 INCLUDED
25	12.08.15	ALTERED M.SELVAM / CHD & APPD MS & SSK	DRAWING CONVERTED INTO AUTOCAD
24	04.10.12	ALTERED T.R.RAMAMURTHY / CHD & APPD SSK & KRS	DIMN.L1 INCLUDED IN DETAIL-X REFER DCP.:801397

ZONE

CAUTION: The information on this document is the property of BHARAT HEAVY ELECTRICALS LTD. It must not be used directly or indirectly in any way detrimental to the interest of the company.

TYPE OF PRODUCT OR NAME OF CUSTOMER/PROJECT: CS

DRAWING REDRAWN WITH REVISION 24 ON 04.10.2012

BHARAT HEAVY ELECTRICALS LTD., UNIT: HIGH PRESSURE BOILER PLANT. TIRUCHIRAPALLI -620014.

365-120

	NAME	SIGN	DATE	NO.OF VAR.
DRN	A.S.PANDY		19.12.06	–
CHD	T.R.RAMAMURTHY		19.12.06	
APPD	P.BOOMINATHAN		19.12.06	

DEPT VL; CODE 320; SCALE NTS.; WEIGHT (KG). REFER TABLE; REFERENCE INFORMATIONS CAD:C201813 (REF. DCP.800223); NO. OF ITEMS –

TITLE: STEM; CARD CODE U 01; DRAWING NO. 2-V-0000-01813; REV 29

Size A2

DRAWING NO: 2–V–0000–05884

ALL DIMENSIONS ARE IN MILLIMETRES. FOR TOLERANCES OF UNTOLERANCED DIMENSIONS DURING MANUFACTURE REFER RELEVANT QCP / QP

SL. No.	DRG. No.	COMP. CODE	MATL. SPECN	øD1 –b9	øD2	øU +0.5 0	L	L1	L2	L3	L4	LTr	L5	L6	Md	RG	SCRAP SORT	Tr DxP DIA INCH–N ACME–2G–LEFT	FINISHED Wt.(kg)	SIZE/ RATING
1	2–V–N280–05884/04	93 105 734 0000	A182 F6a cl.3 HT (CERTIFY)	41.275	50	33.6	950	69	47	28	30	432	16	22	M16	110	40	1.625"–4ACME	9.30	10"–300C
2	2–V–N276–05884/05	93 105 826 0000		25.4	32	19.1	492	37	28	16	18	214	8	12	M8	70	40	1.0"–5ACME	1.92	4"–150C MO
3	2–V–N283–05884/04	93 105 827 0000		31.75	45	24.1	725	54	37	22	30	325	16	22	M16	70	40	1.25"–4ACME	4.34	8"–150C MO
4	2–V–N311–05884/05	93 105 828 0000					703						16	22	M16	70	40	1.25"–4ACME	4.69	8"–150C GO
5	2–V–N287–05884/04	93 105 829 0000		34.925	50	27.3	920	69	47	28	30	410	16	22	M16	110	40	1.375"–4ACME	7.35	10"–150C MO
6	2–V–N324–05884/04	93 106 206 0000		25.4	32	19.1	472	37	28	16	18	204	8	12	M8	70	40	1.0"–5ACME	1.59	4"–300C SG
7	2–V–N340–05884/04	93 106 207 0000		31.75	40	24.1	660	52	36	20	20	290	16	22	M16	70	40	1.25"–4ACME	4.286	6"–300C SG
8	2–V–N318–05884/05	93 106 439 0000		25.4	32	19.1	492	37	28	16	18	204	8	12	M8	70	40	1.0"–5ACME	1.87	4"–150C HW
9	2–V–N325–05884/04	93 106 454 0000		31.75	45	24.1	732	54	37	22	30	328	16	22	M16	70	40	1.25"–4ACME	4.40	8"–150C SG
10	2–V–N362–05884/05	93 106 455 0000		34.925	50	27.3	877	69	47	28	30	390	16	22	M16	110	40	1.375"–4ACME	6.70	10"–150C SG
11	2–V–N392–05884/04	93 106 456 0000		38.1	50	30.4	984	69	47	28	30	445	16	22	M16	110	40	1.5"–4ACME	9.8	12"–150C SG
12	2–V–N399–05884/04	93 106 563 0000		34.925	45	27.3	800	64	41	22	30	373	16	22	M16	110	40	1.375"–4ACME	6.3	8"–300C SG
13	2–V–N449–05884/04	93 106 860 0000		38.1	50	30.4	929	69	47	28	30	400	16	22	M16	110	40	1.5"–4ACME	8.7	12"–150C SG
14	2–V–N446–05884/04	93 106 892 0000		41.275	55	33.6	1015	75	52	28	34	477	16	22	M16	110	40	1.625"–4ACME	11.23	12"–300C MO
15	2–V–M616–05884/04	93 107 329 0000	A276–410 DOUBLE TEMPERING CERTIFY	25.4	32	19.1	460	37	28	16	18	204	8	12	M8	70	40	1.0"–5ACME	1.54	4"–300C HW
16	2–V–M617–05884/04	93 107 330 0000		31.5	40	24.1	630	52	36	20	20	290	16	22	M16	70	40	1.25"–4ACME	4.10	6"–300C HW
17	2–V–M619–05884/04	93 107 331 0000		25.4	32	19.1	454	37	28	16	18	196	8	12	M8	70	40	1.0"–5ACME	1.53	4"–150C HW
18	2–V–M620–05884/04	93 107 332 0000		28.575	40	22.2	570	52	36	20	20	263	16	22	M16	70	40	1.125"–5ACME	2.86	6"–150C HW
19	2–V–M621–05884/04	93 107 333 0000		41.275	50	33.6	922	69	47	28	30	388	16	22	M16	110	40	1.625"–5ACME	10.1	10"–300C MO
20	2–V–N606–05884/04	93 107 671 0000	A182 F6a cl.3 HT (CERTIFY)	31.75	45	24.1	793	54	37	22	30	336	16	22	M16	70	40	1.25"–4ACME	4.72	8"–150C MO (SMB–00)
21	2–V–N631–05884/05	93 107 792 0000		41.275	55	33.6	1050	75	52	28	34	480	16	22	M16	110	40	1.625"–4ACME	11.60	12"–300C HW
22	2–V–K800–05884/04	93 107 870 0000	A276–410 DOUBLE TEMPERING CERTIFY	25.4	32	19.1	492	37	28	16	18	200	8	12	M8	70	40	1.00"–5ACME	1.87	4"–150C HW SG
23	2–V–K804–05884/04	93 107 892 0000		28.575	40	22.2	625	52	36	20	20	275	16	22	M16	70	40	1.125"–5ACME	3.06	6"–150C HW SG
24	2–V–N644–05884/04	93 108 058 0000	A182 F6a cl.3 HT (CERTIFY)	41.275	50	33.6	875	69	47	28	30	380	16	22	M16	110	40	1.625"–4ACME	9.35	10"–300C HW SG
25	2–V–N645–05884/05	93 108 089 0000		41.275	55	33.6	1070	75	52	28	34	500	16	22	M16	110	40	1.625"–4ACME	11.81	12"–300C HW SG
26	2–V–K848–05884/04	93 108 084 0000		25.4	32	19.1	492	37	28	16	18	223	8	12	M8	70	40	1"00–5ACME	1.87	4"–300C HW SG
27	2–V–K847–05884/04	93 108 078 0000	A276–410 DOUBLE TEMPERING CERTIFY	25.4	32	19.1	492	37	28	16	18	223	8	12	M8	70	40	1"00–5ACME	1.87	4"–300C HW SG
28	2–V–K857–05884/04	93 108 100 0000		31.75	40	24.1	660	52	36	20	20	290	16	22	M16	70	40	1.24"–4ACME	4.10	6"–300C HW SG
29	2–V–K981–05884/04	93 109 439 0000	A182 F6a cl.3 HT (CERTIFY)	31.75	45	24.1	745	54	37	22	30	325	16	22	M16	70	40	1.25"–4ACME	4.34	8"–150C MO
30	2–V–K982–05884/04	93 109 440 0000		38.1	50	30.4	1014	69	47	28	30	400	16	22	M16	70	40	1.5"–4ACME	8.7	12"–150C MO
31	2–V–N993–05884/04	93 110 014 0000		31.75	45	24.1	760	54	37	22	30	335	16	22	M16	70	40	1.25"–4ACME	4.49	8"–150C MO IQ20
32	2–V–NM15–05884	93 206 479 0000	A182 F316 SH (CERTIFY)	31.75	45	24.1	703	54	37	22	30	325	16	22	M16	70	46	1.25"–4ACME	4.69	8"–150C GO

12.5 / 3.2 / 1.6 / 0.4

ABOVE & INCLUDING	b9
ø18–ø30	–0.160
	–0.212
ø30–ø40	–0.172
	–0.232
ø40–ø50	–0.180
	–0.242

DETAIL–B

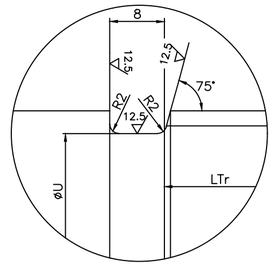

DETAIL–D

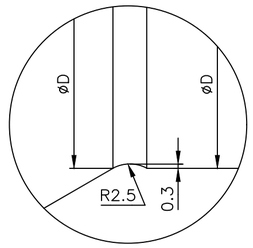

DETAIL–C

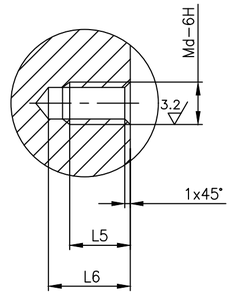

NOTES:–

1. HARDNESS 250 TO 300 BHN FOR SA182–F6a cl.3
2. HARDNESS 22 HRC (MAX) FOR A276–410

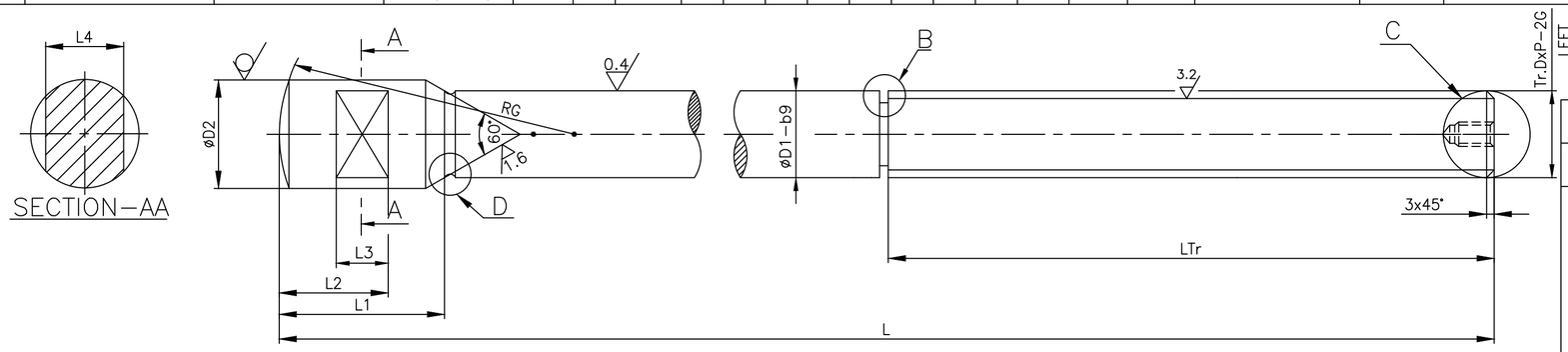

DCP No.	ALTD RPS	APPD SSK	DCP No.	ALTD: P.N	APPD: KRS
–	CHD MK	DT: 27.11.23	801486	CHD: SSK	DT: 22.03.13

REV		REV	
23	THREADED HOLE INCLUDED IN DETAIL–C. COLUMNS L5, L6 & Md INCLUDED IN TABLE. SL. No. 32 INCLUDED.	22	DIMENSION RG & 3x45° INCLUDED.
ZONE		ZONE	

CAUTION: The information on this document is the property of BHARAT HEAVY ELECTRICALS LTD. It must not be used directly or indirectly in any way detrimental to the interest of the company.

MATL MARK*	No OFF	DESCRIPTION	MATL CODE	MATL SPECN	HEAT TREATMENT	SCRAP SORT	NET WT (kg)	GROSS WT (kg)	DRAWING No. / COMP. CODE	ITEM No

TYPE OF PRODUCT
OR NAME OF
CUSTOMER/PROJECT

BHARAT HEAVY ELECTRICALS LTD.,
UNIT: HIGH PRESSURE BOILER PLANT.
TIRUCHIRAPALLI–620014.
365–190 02.03.2021

	NAME	SIGN	DATE	NO.OF VAR.
DRN	T.R.RAMAMURTHY		22.10.07	–
CHD	T.R.RAMAMURTHY		22.10.07	
APPD	P.BOOMINATHAN		22.10.07	

DEPT	SCALE	WEIGHT (KG).	REFERENCE INFORMATIONS	NO. OF ITEMS
VL	NTS	–		–
CODE 320				

TITLE	CARD CODE	DRAWING NO.	REV
STEM	U 01	2–V–0000–05884	23

Size A2

DRAWING NO: 2-V-0000-05573

ALL DIMENSIONS ARE IN MILLIMETRES. FOR TOLERANCES OF UNTOLERANCED DIMENSIONS DURING MANUFACTURE REFER RELEVANT QCP / QP

SL. No.	DRG. No.	COMP. CODE	MATL. SPECN	øD1 −b9	øD2	øU +0.5 0	S	L	L1	L2	L3	L4	C	L5	L6	W	W1	L7 ⚠	L8 ⚠	Md ⚠	f	SCRAP SORT	Tr DxP 2G−LEFT	FINISHED Wt.(kg)	SIZE/ RATING
01	2−V−N001−05573/03	93 104 001 0000	ASTM A182−GR. F6a CL.3 HT (CERTIFY)	28.575	40	22.2	263	570	52	36	20	20	3					16	22	M16	0.4	40	1.125"−5ACME	2.86	6"−150C HO
02	2−V−N002−05573/04	93 104 002 0000		28.575	40	22.2	275	625	52	36	20	20	3					16	22	M16	0.4	40	1.125"−5ACME	3.51	6"−150C HO SG
03	2−V−N009−05573/03	93 104 003 0000		31.750	45	24.1	310	694	54	37	22	30	3					16	22	M16	0.4	40	1.250"−4ACME	4.15	8"−150C
04	2−V−N017−05573/03	93 104 004 0000		31.750	40	24.1	290	630	52	36	20	20	3					16	22	M16	0.4	40	1.250"−4ACME	4.10	6"−300C
05	2−V−N049−05573/05	93 104 005 0000		22.225	32	15.9	155	392	41	–	–	–	3	29	13	25.5	10	8	12	M8	0.4	40	0.875"−5ACME	1.32	3"−300C
06	2−V−N025−05573/05	93 104 006 0000		22.225	32	15.9	155	383	41	–	–	–	3	29	13	25.5	10	8	12	M8	0.4	40	0.875"−5ACME	1.29	3"−150C
07	2−V−N033−05573/04	93 104 007 0000		25.400	32	19.1	196	454	41	28	16	18	3					8	12	M8	0.4	40	1.000"−5ACME	1.53	4"−150C
08	2−V−N041−05573/03	93 104 008 0000		38.100	50	30.4	437	960	69	47	28	30	3.5					16	22	M16	0.4	40	1.500"−4ACME	8.35	12"−150C
09	2−V−N057−05573/03	93 104 009 0000		34.925	50	27.3	375	840	69	47	28	30	3.5					16	22	M16	0.4	40	1.375"−4ACME	6.55	10"−150C
10	2−V−N065−05573/03	93 104 010 0000		41.275	50	33.6	388	860	69	47	28	30	3.5					16	22	M16	0.4	40	1.625"−4ACME	9.36	10"−300C
11	2−V−N089−05573/03	93 104 011 0000		34.925	45	27.3	365	780	64	41	22	30	3.5					16	22	M16	0.4	40	1.375"−4ACME	6.16	8"−300C
12	2−V−N097−05573/03	93 104 012 0000		25.400	32	19.1	204	460	41	28	16	18	3					8	12	M8	0.4	40	1.000"−5ACME	1.54	4"−300C
13	2−V−N105−05573/03	93 104 052 0000		41.275	55	33.6	425	961	75	52	28	34	4.5					16	22	M16	0.4	40	1.625"−4ACME	10.7	12"−300C MO & GO
14	2−V−M357−05573/02	93 105 306 0000	SA182−F304 SOLUTION HEAT TREATED CERTIFY	25.4	32	19.1	204	460	41	28	16	18	3					8	12	M8	0.4	46	1.0"−5ACME	1.54	4"−300C
15	2−V−M358−05573/02	93 105 307 0000		31.75	40	24.1	290	630	52	36	20	20	3					16	22	M16	0.4	46	1.25"−4ACME	4.10	6"−300C
16	2−V−M359−05573/02	93 105 308 0000		34.925	45	27.3	365	780	64	41	22	30	3.5					16	22	M16	0.4	46	1.375"−4ACME	6.16	8"−300C
17	2−V−N227−05573/03	93 105 433 0000	ASTM A182 Gr. F6a CL.3 HT−CERTIFY	41.275	50	33.6	388	922	69	47	28	30	3.5					16	22	M16	0.4	40	1.625"−4ACME	10.01	10"−300C
18	2−V−N588−05573/02	93 108 464 0000		41.275	50	33.6	417	912	69	47	28	30	3.5					16	22	M16	0.4	40	1.625"−4ACME	10.00	10"−300C
19	2−V−K994−05573/01	93 109 645 0000		25.400	32	19.1	223	492	41	28	16	18	3					8	12	M8	0.4	40	1.000"−5ACME	1.87	4"−300C(SPF)
20	2−V−J002−05573/01	93 109 646 0000		31.75	40	24.1	290	660	52	36	20	20	3					16	22	M16	0.4	40	1.25"−4ACME	4.286	6"−300C(SPF)
21	2−V−K998−05573/01	93 109 647 0000		34.925	45	27.3	373	800	64	41	22	30	3.5					16	22	M16	0.4	40	1.375"−4ACME	6.30	8"−300C(SPF)
22	2−V−K996−05573/01	93 109 648 0000		41.275	50	33.6	417	912	69	47	28	30	3.5					16	22	M16	0.4	40	1.625"−4ACME	10.00	10"−300C(SPF)
23	2−V−N905−05573/01	93 201 369 0000	ASTM A182−F316 SH,CERTIFY	41.275	55	33.6	425	961	75	52	28	34	4.5					16	22	M16	0.4	46	1.625"−4ACME	10.7	12"−300C GO CF8

12.5 3.2 0.4

ABOVE & INCLUDING	b9
ø18−ø30	−0.160
	−0.212
ø30−ø40	−0.172
	−0.232
ø40−ø50	−0.180
	−0.242

DETAIL−B

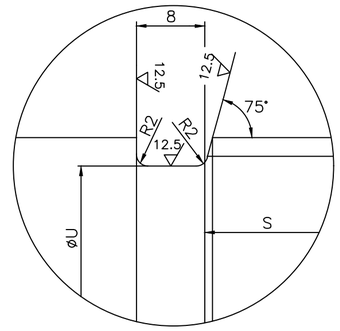

DETAIL−C

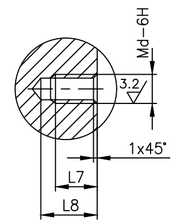

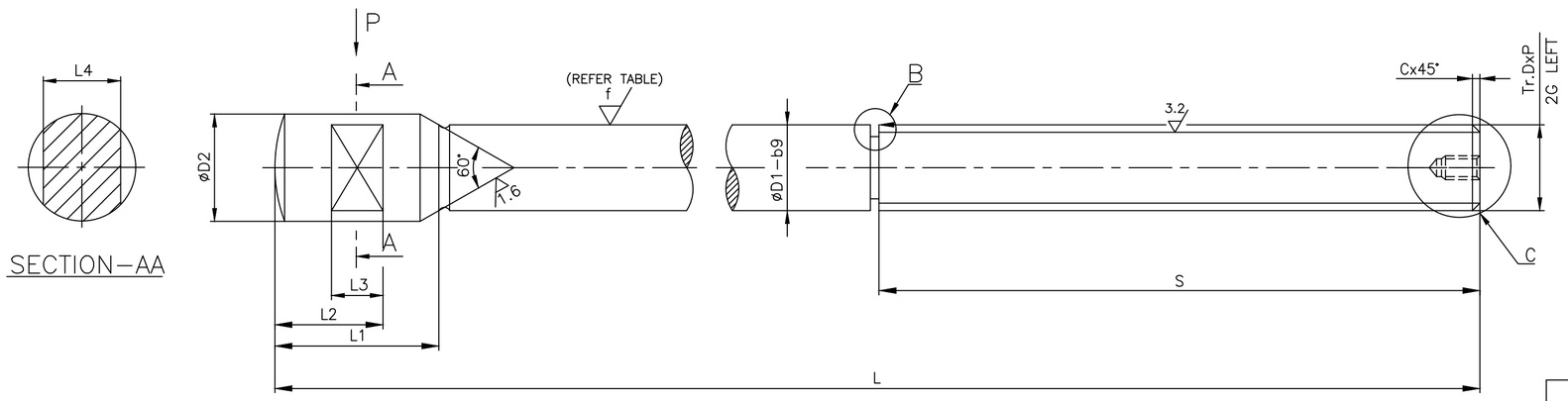

NOTES:−

1. HARDNESS 250 TO 300 BHN FOR SA182−F6a CL.3

VIEW−P

(ONLY'FOR SL.NO.05 & 06−3"−150C & 300C)

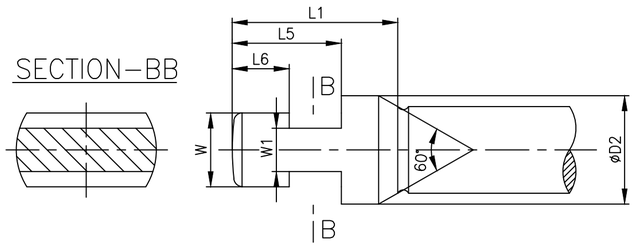

DCP No.	ALTD RPS	APPD SSK	DCP No.	ALTD:T.R.R	APPD: P.BOOMI
–	CHD MK	DT: 27.11.23	800223	CHD: P.BOOMI	DT: 12.06.08

REV		REV	
13	THREADED HOLE INCLUDED WITH DETAIL−C. COLUMNS L7, L8 & Md INCLUDED IN TABLE.	12	SL. No. 23 INCLUDED
ZONE –		ZONE –	

MATL MARK*	No OFF	DESCRIPTION	MATL CODE	MATL SPECN	HEAT TREATMENT	SCRAP SORT	NET WT (kg)	GROSS WT (kg)	DRAWING No. / COMP. CODE	ITEM No

CAUTION: The information on this document is the property of BHARAT HEAVY ELECTRICALS LTD. It must not be used directly or indirectly in any way detrimental to the interest of the company.

TYPE OF PRODUCT OR NAME OF CUSTOMER/PROJECT

DRG. REDRAWN WITH REVISION 12 ON 12.06.2008
(REFER DCN.CS:0342,0257,0477,0688,0785,0835)
(REFER DCP.800223)

BHARAT HEAVY ELECTRICALS LTD.,
UNIT: HIGH PRESSURE BOILER PLANT.
TIRUCHIRAPALLI−620014.
365−190 02.03.2021

	NAME	SIGN	DATE	NO.OF VAR.
DRN	K.P.LEON		31.08.03	–
CHD	P.BOOMINATHAN		31.08.03	
APPD	K.S.RAMAN		31.08.03	

DEPT	SCALE	WEIGHT (KG).	REFERENCE INFORMATIONS	NO. OF ITEMS
VL	NTS	–		–
CODE 320				

TITLE	CARD CODE	DRAWING NO.	REV
STEM	U 01	2−V−0000−05573	13

Size A2

TP-DG-1-V-2885-02595
CORPORATE DRG ID

FIRST ANGLE PROJECTION (ALL DIMENSIONS IN MILLIMETRES)

DRAWING NO 1-V - 2885 - 02595/2

CAUTION THE INFORMATION ON THIS DOCUMENT IS THE PROPERTY OF BHARAT HEAVY ELECTRICALS LTD., IT MUST NOT BE USED DIRECTLY OR INDIRECTLY IN ANY WAY DETRIMENTAL TO THE INTEREST OF THE COMPANY.

SECTION-AA

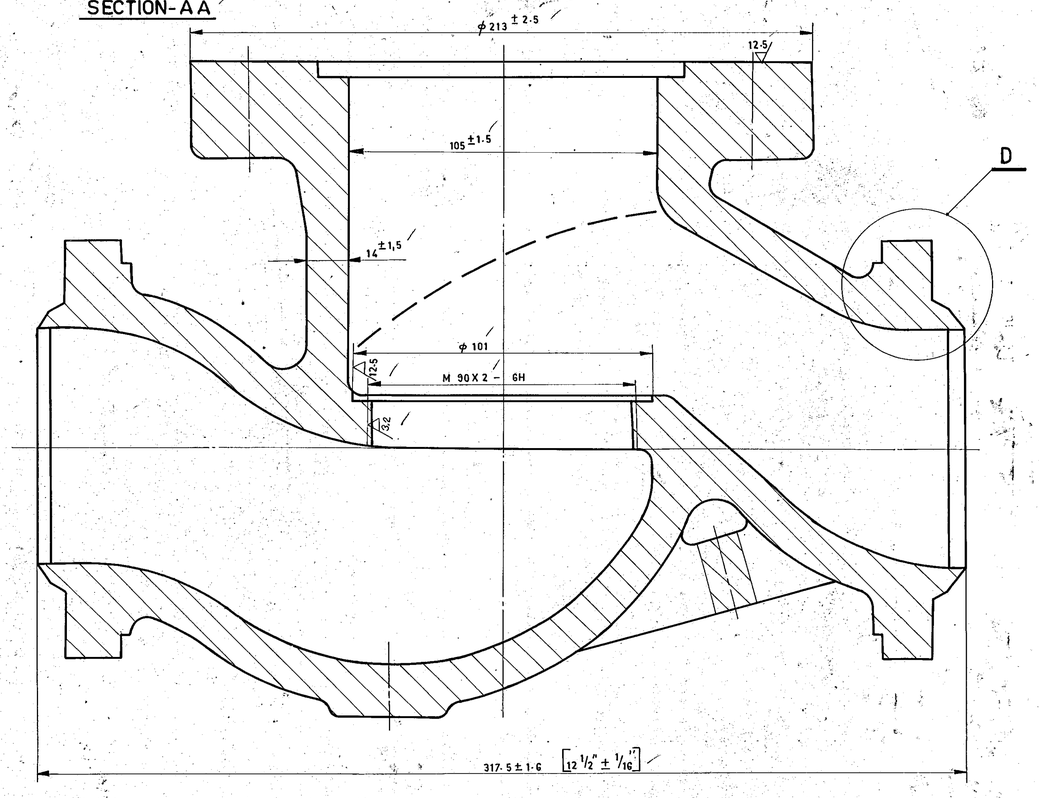

SECTION-BB

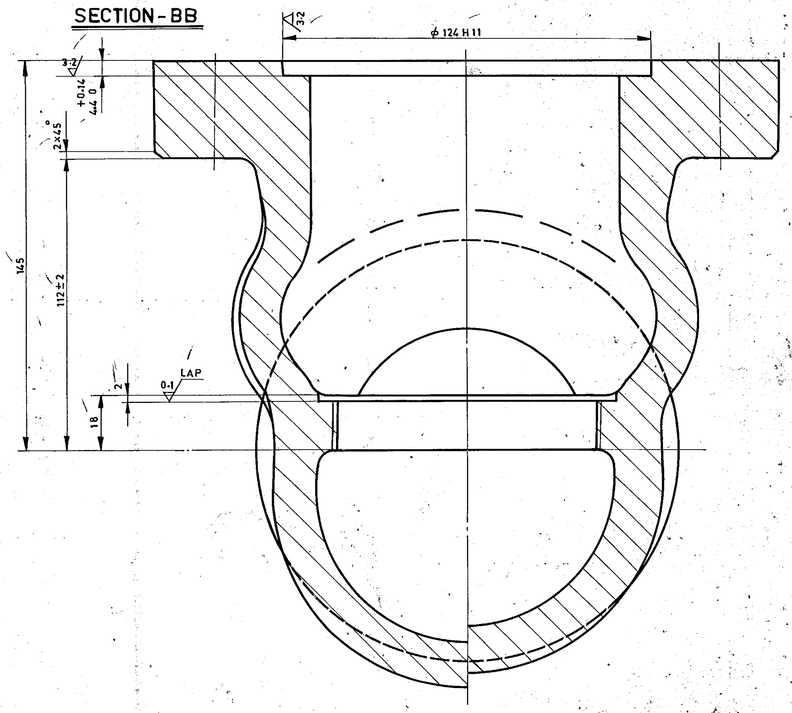

12.5 / 6.3 / 3.2 / 0.1

ϕ 124 H 11	+0.250
	0

SECTION-CC

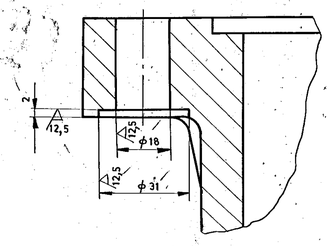

DETAIL-D

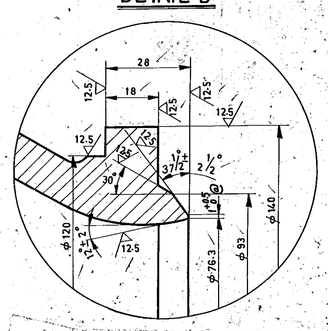

EDGE PREPARATION

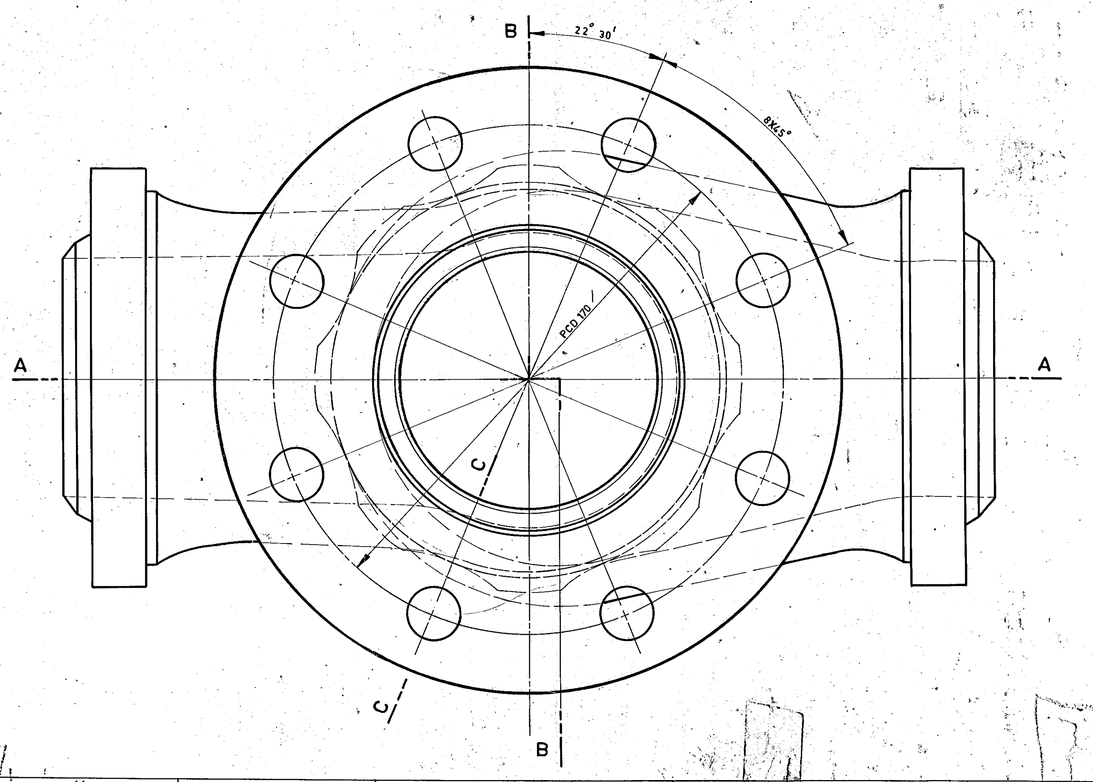

NO. OFF	DESCRIPTION	MATL. CODE	MATL. SPECN.	HEAT TREATMENT	SCRAP SORT	NET WT (KG)	GROSS WT (KG)	DRG. NO.	ITEM NO.
1	BODY C.D. NO 2-V-2885-0823/R	92 024 942	ASTM A216 GR WCB ATTEST	NR	10	32.0	33.0	1-V-2885-02595/2	

BHARAT HEAVY ELECTRICALS LIMITED
BOILER PLANT UNIT, TIRUCHIRAPALLI-620 014

05-227/B

DEPT.	CODE	SCALE	WEIGHT (KG)	REF. TO ASSY. DRG.	IT. NO.
VL	320	1:1	32.0	3" - 300-CL-BW-RV	

TITLE: BODY
3"- 300 CLASS

	NAME	SIGN	DATE
DRAWN	007		
CHECKED	MRK		23/5/86
APPROVED	S.KUMAR		23/5

DIMENSIONS TO BE CONTROLLED WITHIN LIMITS AS SHOWN, MACHINING TOLERANCE ±0.25 mm UNLESS OTHERWISE SHOWN NON-MACHINED TOLERANCE ±

CARD CODE U01 | DRAWING NO. 1-V-2885-02595 | REV. 2

007

REV	DATE	ALTRD:	CHD:
2	30-05-86		

BODY CASTING DRG. No. CHANGED AS 1-V-2885-02630/R.

REV.	DATE	ALTERED	CHECKED
01	23-01-86	KNC.	MRK

ZONE @ DIMENSION $1^{+0.5}_{0}$ INCLUDED IN DETAIL-D

TP-DG-1-V-2885-02595
CORPORATE DRG ID

DRAWING NO. 2-V-0000-05969/02

ALL DIMENSIONS ARE IN MILLIMETRES. FOR TOLERANCES OF UNTOLERANCED DIMENSIONS DURING MANUFACTURE REFER RELEVANT QCP / QP

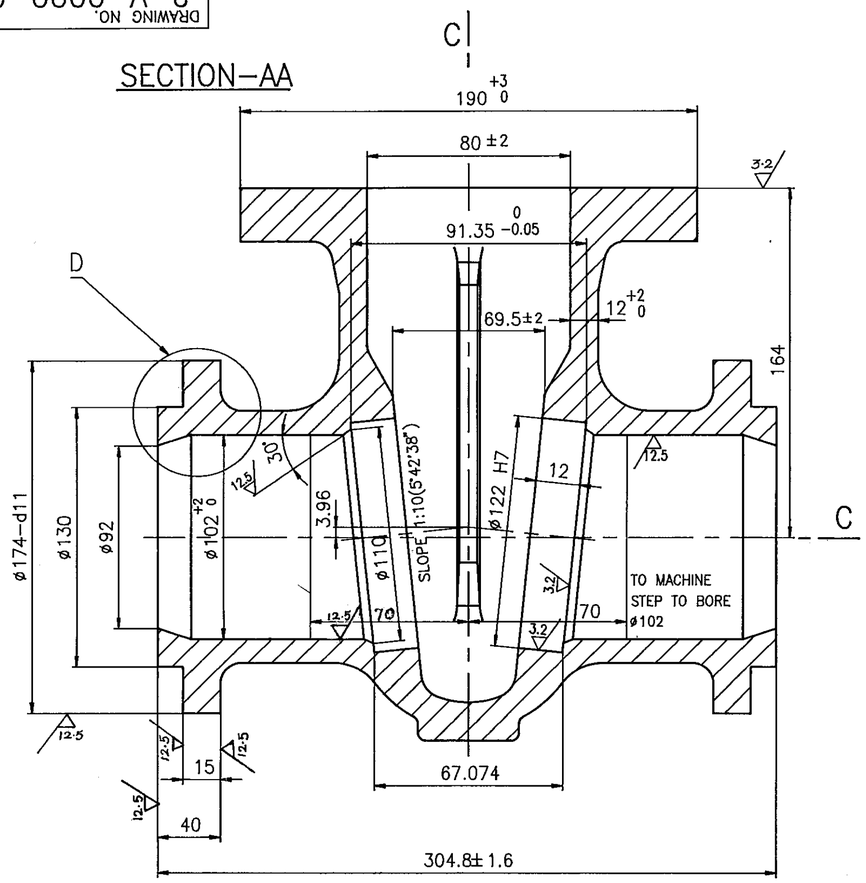

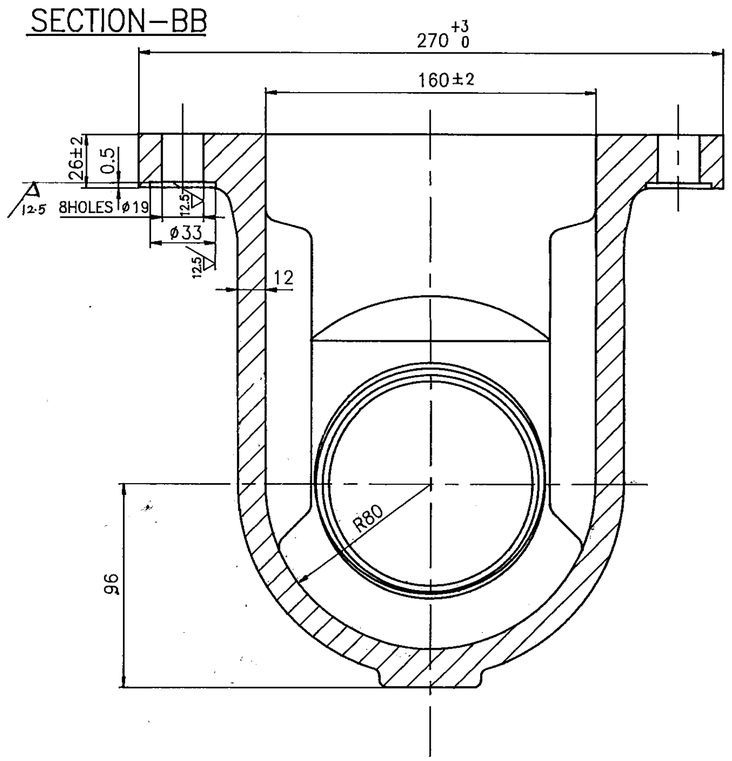

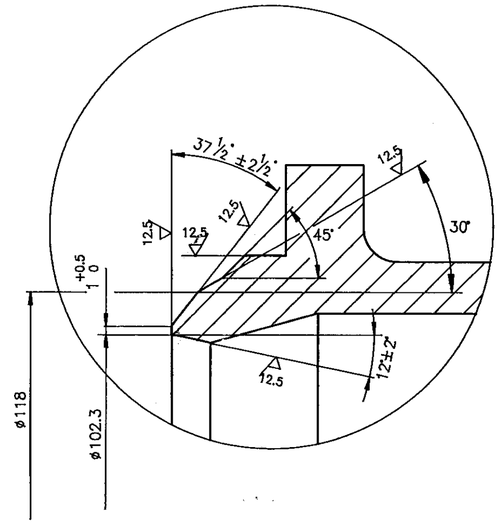

ø122–H7	+0.040 / 0
ø174–d11	–0.145 / –0.395

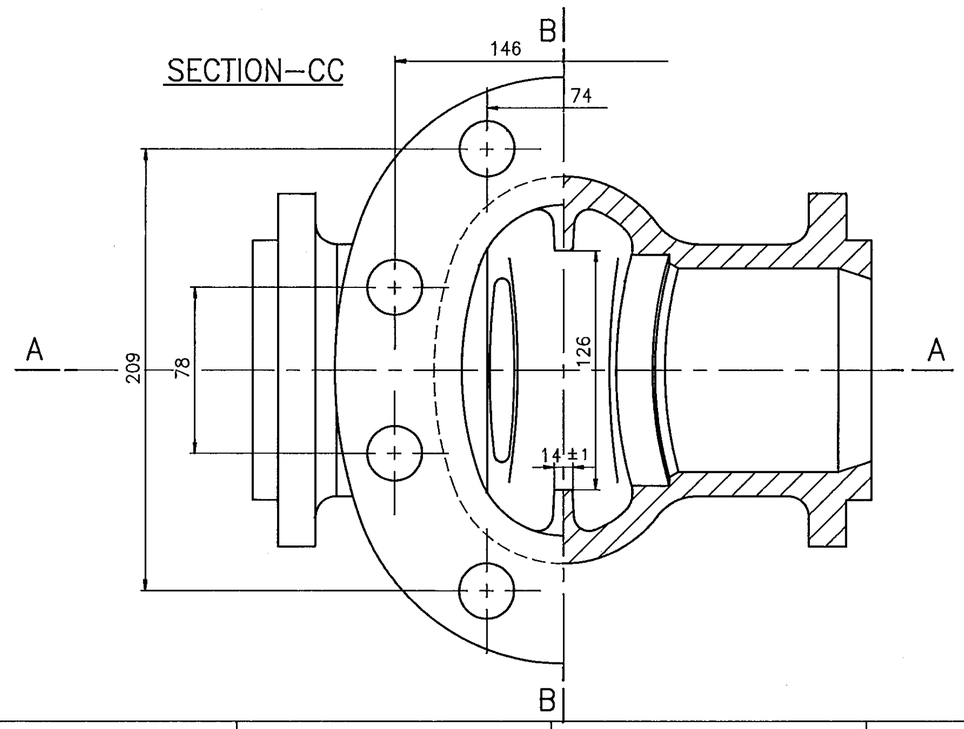

SL. No.	DESCRIPTION	MATL CODE	MATL SPECN	HEAT TREATMENT	SCRAP SORT	NET WT (kg)	GROSS WT (kg)	DRAWING No / COMP.CODE	ITEM No
~~5~~	~~CASTING DRG NO: 2-V-N680-05878R~~	~~92 200 934~~	~~A351 CF8 (ATTEST)~~	~~SH~~	~~46~~	~~27~~	~~31~~	~~2-V-N680-05969~~ / ~~931083140000~~	~~01~~
4	CASTING DRG.No. 2.V.N297.05878R	92 200 304	A217 WC9 (ATTEST)	N & T	20	27.0	31.0	2.V.N297.05969 / 931060090000	01
3	CASTING DRG.No. 2.V.N296.05878R	92 200 303	A217 WC6 (ATTEST)	N & T	20	27.0	31.0	2.V.N296.05969 / 931060080000	01
2	CASTING DRG.No. 2.V.N295.05878R	92 200 302	A216 WCC (ATTEST)	NORMALISED	10	27.0	31.0	2.V.N295.05969 / 931060070000	01
1	CASTING DRG.No. 2.V.N294.05878R	92 200 301	A216 WCB ATTEST	NORMALISED	10	27.0	31.0	2.V.N294.05969 / 931060060000	01

REV	DATE	ALTD:- T.L.
02	02.12.98	CHD & APPD:-

SL.No. 5 DELETED

REV	DATE	ALTERED: N.DHANAPAL
01	26.09.97	CHD & APPD

SL.No. 5 INCLUDED.

CAUTION: The information on this document is the property of BHARAT HEAVY ELECTRICALS LTD. It must not be used directly or indirectly in any way detrimental to the interest of the company.

TYPE OF PRODUCT
OR NAME OF
CUSTOMER/PROJECT

BHARAT HEAVY ELECTRICALS LTD.
UNIT: HIGH PRESSURE BOILER PLANT.
TIRUCHIRAPALLI -620014.

	NAME	SIGN	DATE	NO.OF VAR.
DRN	T.R.R.MURTHY		21.10.95	–
CHD	N.DHANAPAL		2-01-96	
APPD	A.VISWANATHAN		3.1.96	

DEPT	SCALE	WEIGHT (KG).	REFERENCE INFORMATIONS	NO. OF ITEMS
VL	NTS.	–	CAD:C205969	–
CODE 320				

TITLE	CARD CODE	DRAWING NO.	REV
BODY (4" C150 BW)	U 01	2-V-0000-05969	02

Size A2

DRAWING NO. 2-V-0000-05950

ALL DIMENSIONS ARE IN MILLIMETRES. FOR TOLERANCES OF UNTOLERANCED DIMENSIONS DURING MANUFACTURE REFER RELEVANT QCP / QP

12.5 3.2

ø190-H11	+0.290 / 0
ø124-H7	+0.040 / 0
ø194-h11	0 / -0.290

SECTION-AA

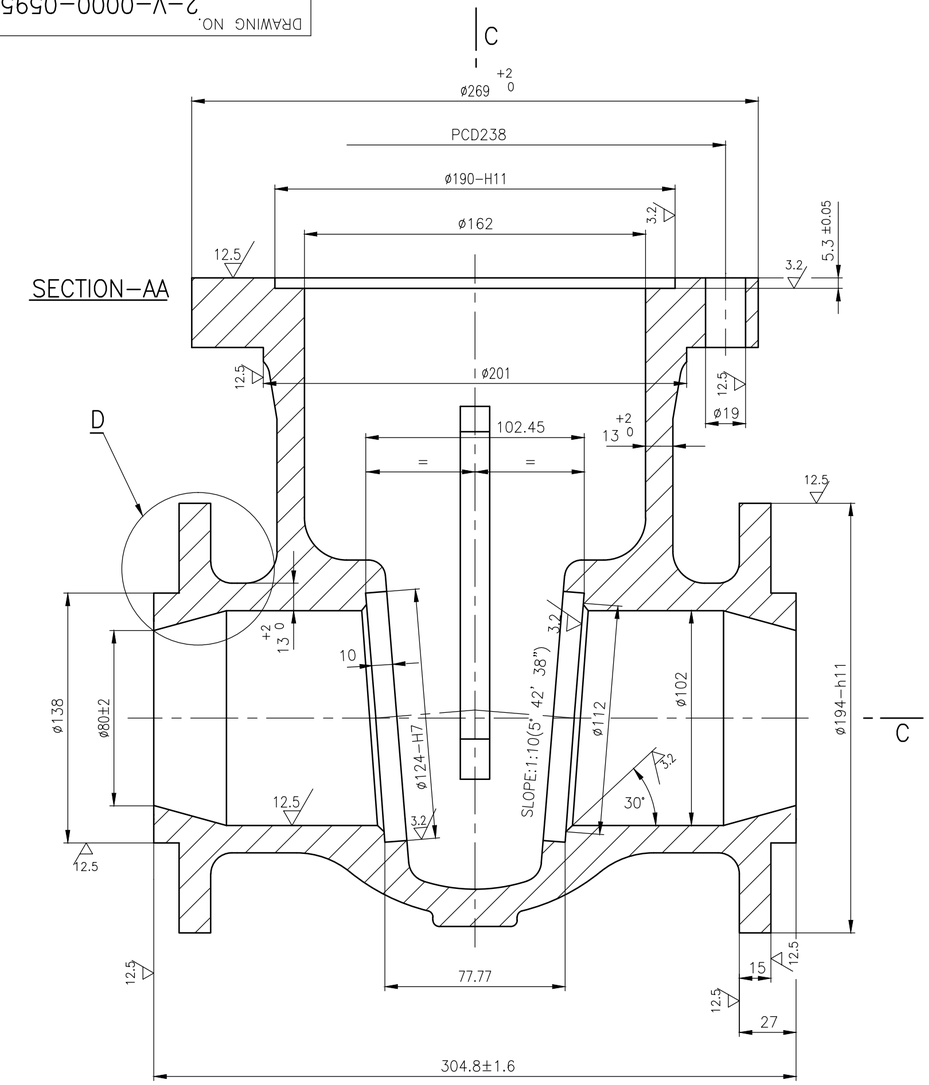

SECTION-BB

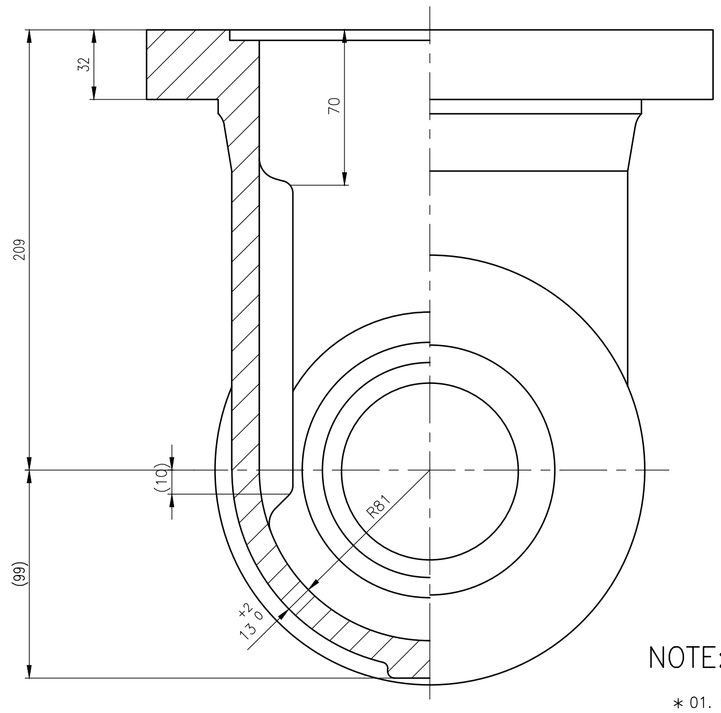

DETAIL-D

FOR STANDARD VALVE ONLY

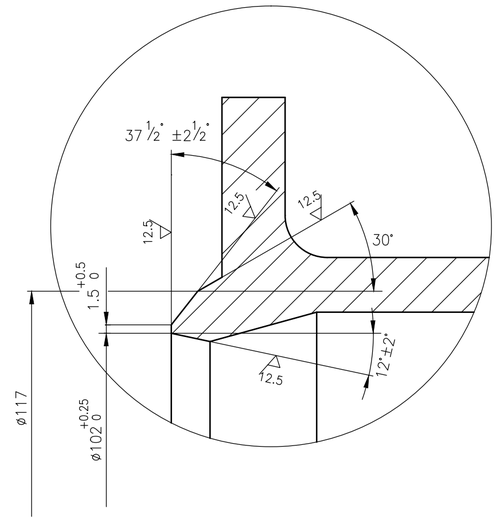

SECTION-CC

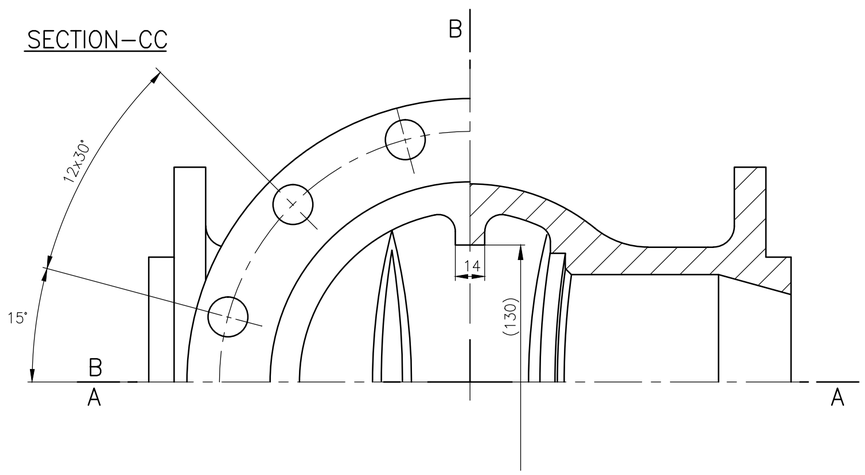

NOTE:-

* 01. QUALITY PROCEDURE AS APPLICABLE FOR SPECIAL CLASS RATING.

*	SL. No.	DESCRIPTION	MATL CODE	MATL SPECN	HEAT TREATMENT	SCRAP SORT	NET WT (kg)	GROSS WT (kg)	DRAWING No / COMPONENT CODE	ITEM No
*	5	CASTING	92 203 229	SA216 WCB	NORMALISED	10	68.0	73.0	2.V.NH92.05950 / 932033260000	01
	4	CASTING	92 200 266	SA216 WCB	NORMALISED	10	68.0	73.0	2.V.N251.05950/1 / 931059570000	01
	3	CASTING	92 200 267	SA216 WCC	NORMALISED	10	68.0	73.0	2.V.N252.05950/1 / 931059560000	01
	2	CASTING	92 200 268	SA217 WC6	N & T	20	68.0	73.0	2.V.N253.05950/1 / 931059550000	01
	1	CASTING	92 200 269	SA217 WC9	N & T	20	68.0	73.0	2.V.N254.05950/1 / 931058840000	01

REV	DATE	ALTERED	REV	DATE	ALTERED
03	06.03.14	S.SARANYA CHD & APPD SSK & K.R.S	02	18.03.13	P.NALLATHAMBI CHD & APPD SSK & KRS

SL.No. 05 INCLUDED

ZONE

DETAIL D DIMENSION ø102 & ø117 WERE ø92 & ø111.

DCP: 801483

CAUTION: The information on this document is the property of BHARAT HEAVY ELECTRICALS LTD. It must not be used directly or indirectly in any way detrimental to the interest of the company.

TYPE OF PRODUCT OR NAME OF CUSTOMER/PROJECT: DRAWING REDRAWN WITH REV. 02 ON 18.03.13

BHARAT HEAVY ELECTRICALS LTD., UNIT: HIGH PRESSURE BOILER PLANT. TIRUCHIRAPALLI -620014.

365-120

	NAME	SIGN	DATE	NO.OF VAR.
DRN	T.R.R.MURTHY		08.10.95	
CHD	N.DHANAPAL		08.10.95	–
APPD	A.VISWANATHAN		13.10.95	

DEPT VL

CODE 320

SCALE NTS

WEIGHT (KG). --

REFERENCE INFORMATIONS: CAD REF:C205950

NO. OF ITEMS –

TITLE: BODY (4"-C300)

CARD CODE U 01

DRAWING NO. 2-V-0000-05950

REV 03

Size A2

DRAWING NO. 2-V-0000-05966/0

ALL DIMENSIONS ARE IN MILLIMETRES. FOR TOLERANCES OF UNTOLERANCED DIMENSIONS DURING MANUFACTURE REFER RELEVANT QCP / QP

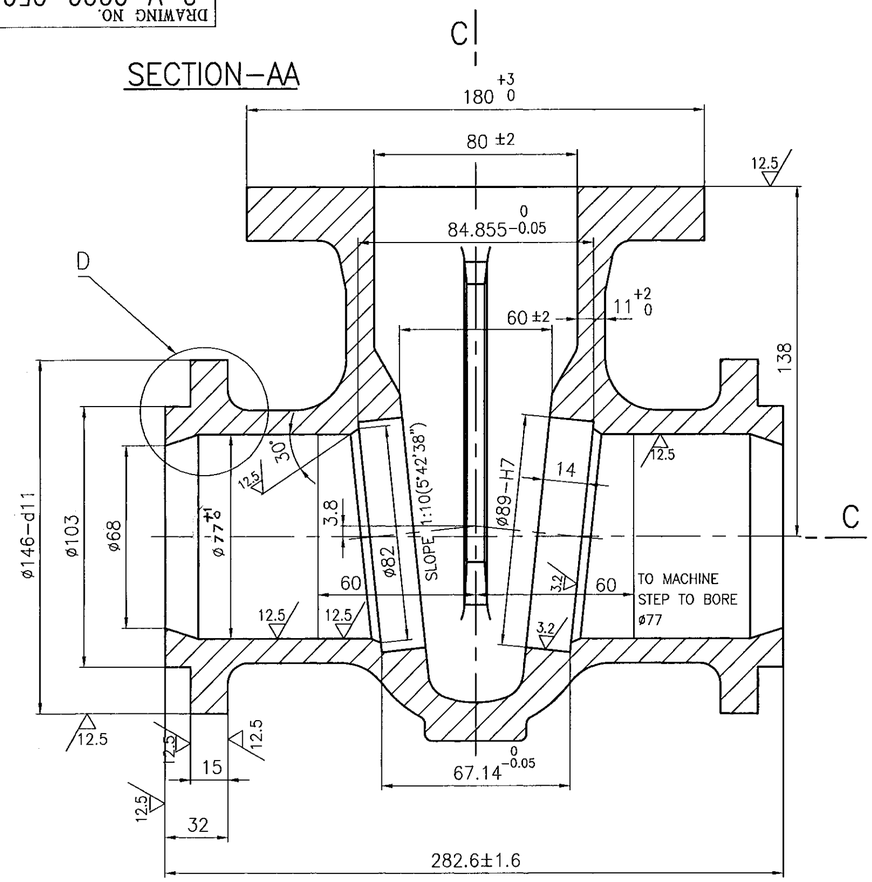

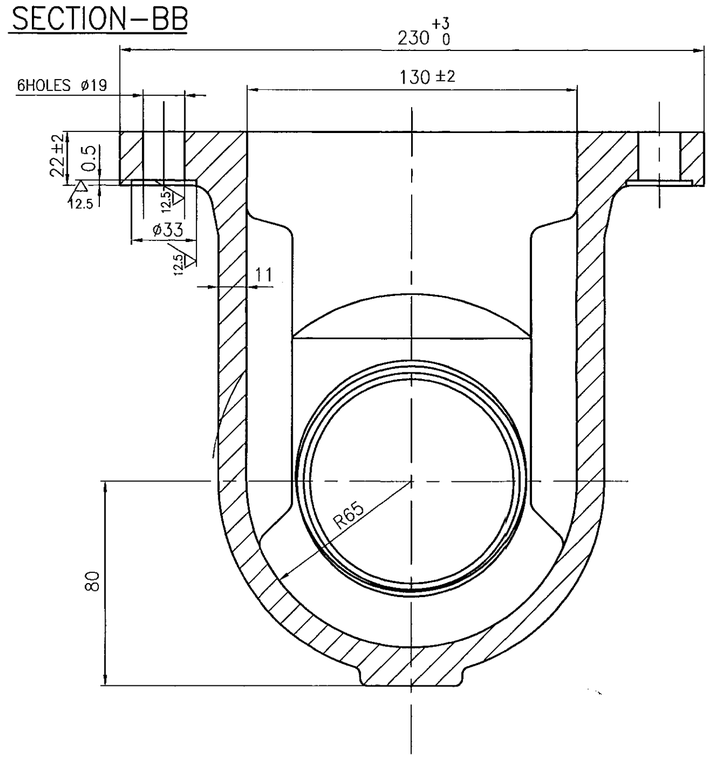

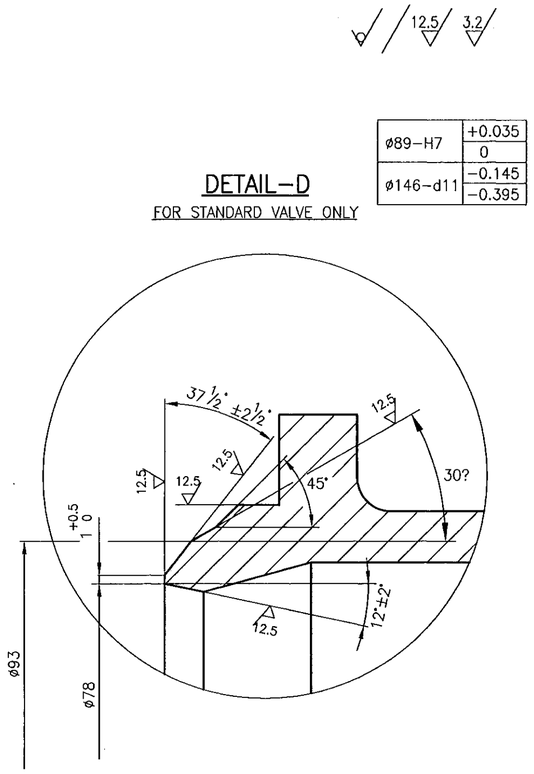

ø89–H7	+0.035 / 0
ø146–d11	−0.145 / −0.395

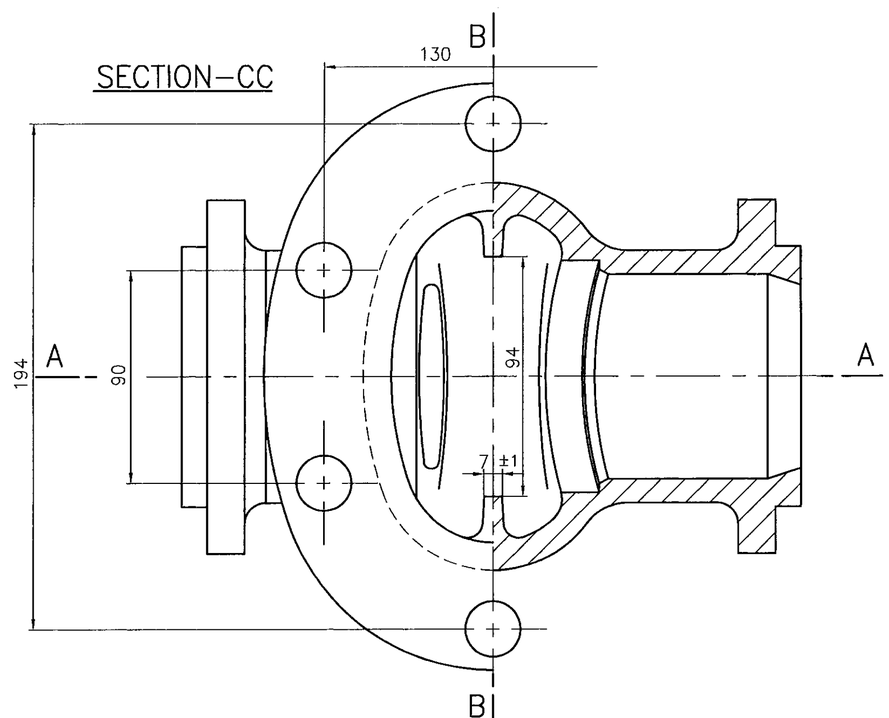

SL. NO.	DESCRIPTION	MATL CODE	MATL SPECN	HEAT TREATMENT	SCRAP SORT	NET WT (kg)	GROSS WT (kg)	DRAWING No	ITEM No
5	CASTING DRG.No. 2.V.N677.05875R	92200933	A351 CF8 (ATTEST)	S.H	4.6	14.5	18.5	2VN677.05966/ 931083130000	01
4	CASTING DRG.No. 2.V.N292.05875R	92 200 299	A217 WC9 (ATTEST)	N & T	20	14.5	18.5	2VN29205966/02 931060130000	01
3	CASTING DRG.No. 2.V.N291.05875R	92 200 298	A217 WC6 (ATTEST)	N & T	20	14.5	18.5	2VN29105966/02 931060120000	01
2	CASTING DRG.No. 2.V.N290.05875R	92 200 297	A21C WCC (ATTEST)	NORMALISED	10	14.5	18.5	2VN290.05966/02 931060110000	01
1	CASTING DRG.No. 2.V.N289.05875R	92 200 296	A216 WCB ATTEST	NORMALISED	10	14.5	18.5	2VN28905966/02 931060100000	01

TYPE OF PRODUCT OR NAME OF CUSTOMER/PROJECT: CS

DRG. RETRACED WITH REV.01 ON 01.09.97(REFER DCN.CS:0577)

BHARAT HEAVY ELECTRICALS LTD.,
UNIT: HIGH PRESSURE BOILER PLANT.
TIRUCHIRAPALLI-620014.
365-120

	NAME	SIGN	DATE	NO.OF VAR.
DRN	T.R.R.MURTHY		01.09.97	
CHD	N.DHANAPAL		01.09.97	–
APPD	A.VISWANATHAN		01.09.97	

DEPT: V L
CODE: 320
SCALE: NTS.
WEIGHT (KG): –
REFERENCE INFORMATIONS: CAD:C205966
NO. OF ITEMS: –

TITLE: BODY (3" C150 BW)
CARD CODE: U 01
DRAWING NO. 2-V-0000-05966
REV 03

REV	DATE	ALTD: N.D.P.B.L. / CKD&APPD:	REV	DATE	ALTERED / CHD & APPD
03	26.09.97		02	02.09.97	

1. SL.NO. 5 INCLUDED.

ZONE: DIMENSION IN TOP FLANGE 4HOLESxø19 REVISED TO 6HOLESxø19

REFER DCN.CS:0740

CAUTION: The information on this document is the property of BHARAT HEAVY ELECTRICALS LTD. It must not be used directly or indirectly in any way detrimental to the interest of the company.

Size A2

DRAWING NO. 2-V-0000-05966/0

ALL DIMENSIONS ARE IN MILLIMETRES. FOR TOLERANCES OF UNTOLERANCED DIMENSIONS DURING MANUFACTURE REFER RELEVANT QCP / QP

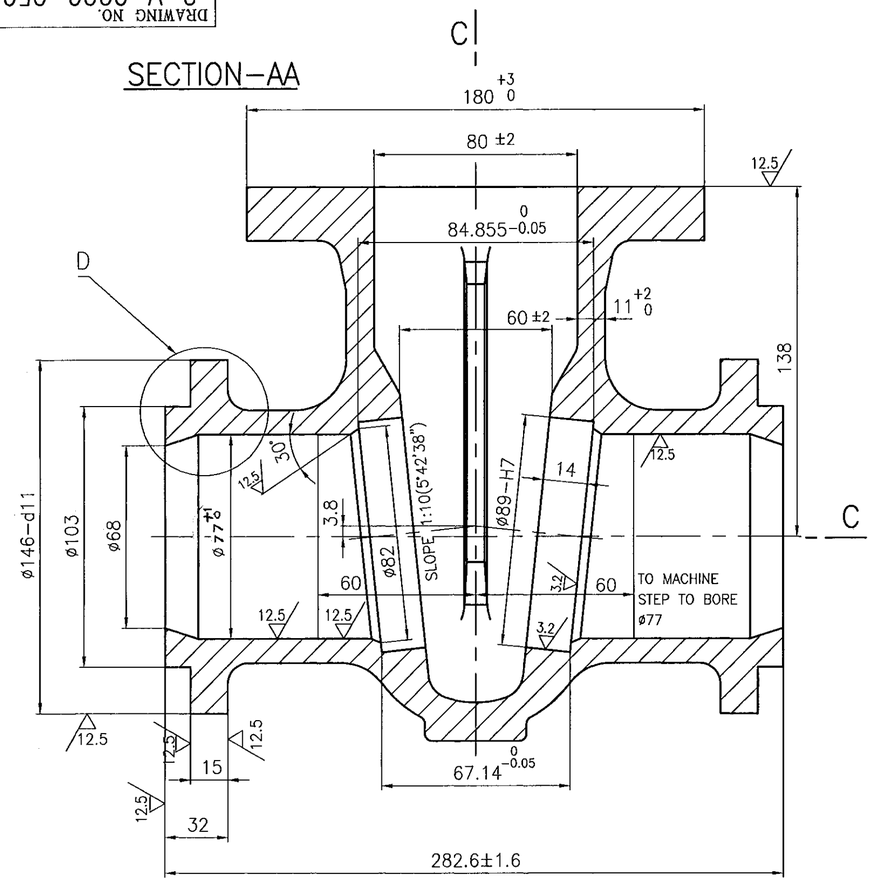

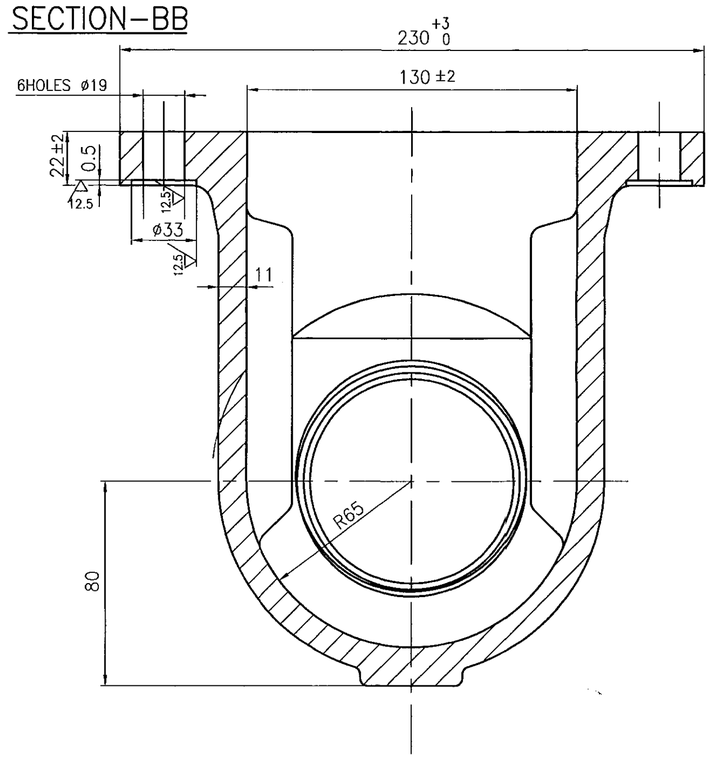

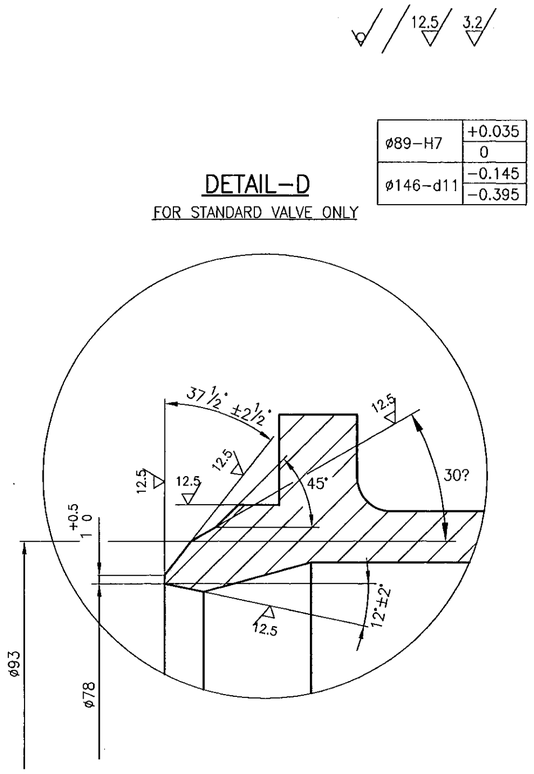

ø89–H7	+0.035 / 0
ø146–d11	−0.145 / −0.395

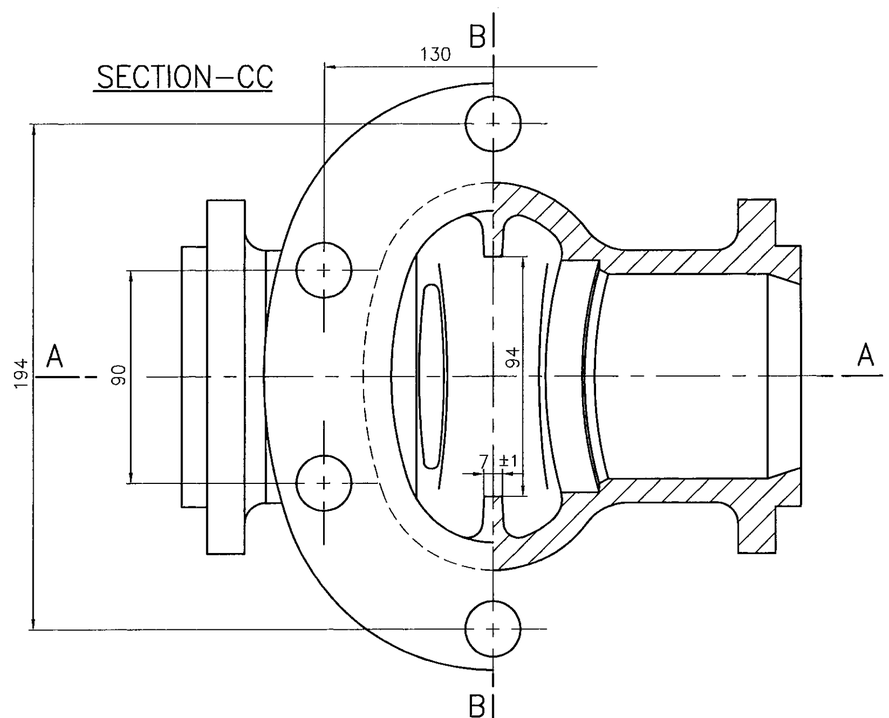

SL. NO.	DESCRIPTION	MATL CODE	MATL SPECN	HEAT TREATMENT	SCRAP SORT	NET WT (kg)	GROSS WT (kg)	DRAWING No	ITEM No
5	CASTING DRG.No. 2.V.N677.05875R	92200933	A351 CF8 (ATTEST)	S.H	4.6	14.5	18.5	2VN677.05966/ 931083130000	01
4	CASTING DRG.No. 2.V.N292.05875R	92 200 299	A217 WC9 (ATTEST)	N & T	20	14.5	18.5	2VN29205966/02 931060130000	01
3	CASTING DRG.No. 2.V.N291.05875R	92 200 298	A217 WC6 (ATTEST)	N & T	20	14.5	18.5	2VN29105966/02 931060120000	01
2	CASTING DRG.No. 2.V.N290.05875R	92 200 297	A21C WCC (ATTEST)	NORMALISED	10	14.5	18.5	2VN290.05966/02 931060110000	01
1	CASTING DRG.No. 2.V.N289.05875R	92 200 296	A216 WCB ATTEST	NORMALISED	10	14.5	18.5	2VN28905966/02 931060100000	01

TYPE OF PRODUCT OR NAME OF CUSTOMER/PROJECT: CS

DRG. RETRACED WITH REV.01 ON 01.09.97(REFER DCN.CS:0577)

BHARAT HEAVY ELECTRICALS LTD.,
UNIT: HIGH PRESSURE BOILER PLANT.
TIRUCHIRAPALLI-620014.
365-120

	NAME	SIGN	DATE	NO.OF VAR.
DRN	T.R.R.MURTHY		01.09.97	
CHD	N.DHANAPAL		01.09.97	–
APPD	A.VISWANATHAN		01.09.97	

DEPT: V L
CODE: 320
SCALE: NTS.
WEIGHT (KG): –
REFERENCE INFORMATIONS: CAD:C205966
NO. OF ITEMS: –

TITLE: BODY (3" C150 BW)
CARD CODE: U 01
DRAWING NO. 2-V-0000-05966
REV 03

REV	DATE	ALTD: N.D.P.B.L. / CKD&APPD:	REV	DATE	ALTERED / CHD & APPD
03	26.09.97		02	02.09.97	

1. SL.NO. 5 INCLUDED.

ZONE: DIMENSION IN TOP FLANGE 4HOLESxø19 REVISED TO 6HOLESxø19

REFER DCN.CS:0740

CAUTION: The information on this document is the property of BHARAT HEAVY ELECTRICALS LTD. It must not be used directly or indirectly in any way detrimental to the interest of the company.

Size A2

ALL DIMENSIONS ARE IN MILLIMETRES. FOR TOLERANCES OF UNTOLERANCED DIMENSIONS DURING MANUFACTURE REFER RELEVANT QCP / QP.

DRAWING NO. 3-V-0000-21315

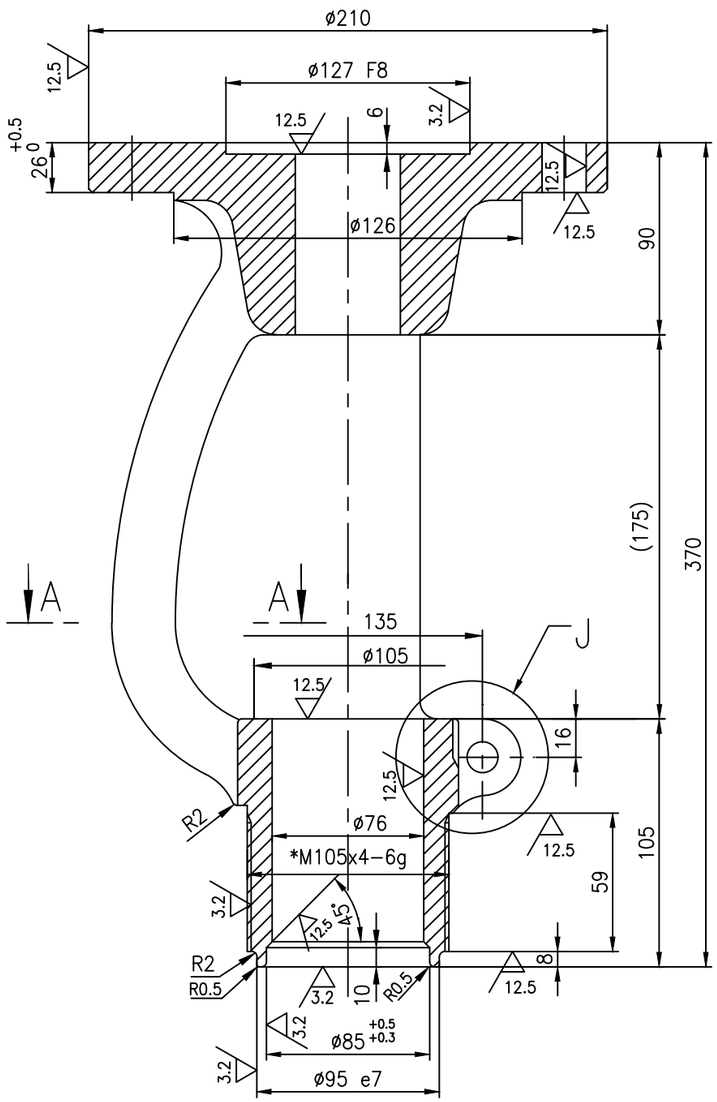

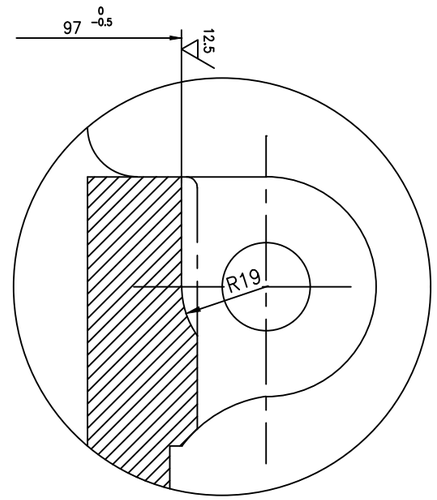

DETAIL-J

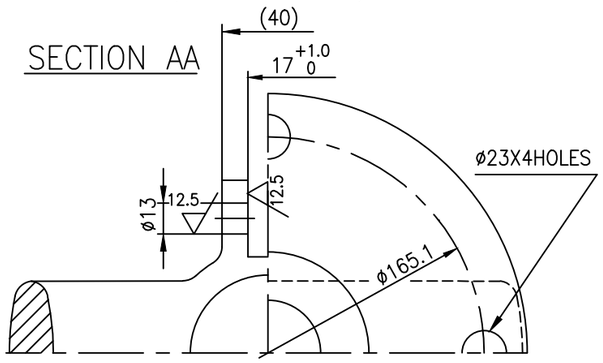

12

ø127-F8	+0.106
	+0.043
ø95-e7	-0.072
	-0.107

NOTES:

* 1. Ni PLATING TO A THICKNESS OF 25 TO 35 MICRONS.

SL. No.	DRAWING No.	COMP. CODE	MATL. SPECN		SCRAP SORT
03	3-V-G393-21315/1	931255720000	A217 C12A,NT PRODUCT ATTEST		20
02	3-V-G212-21315/3	931211920000	A217 WC6,NT PRODUCT ATTEST		20
01	3-V-G209-21315/2	931211900000	A216 WCB,AN PRODUCT ATTEST		10

NO OFF	DESCRIPTION	MATL CODE	MATL SPECN	HEAT TREATMENT	SCRAP SORT	NET WT (kg)	GROSS WT (kg)	DRAWING No	ITEM No

REV	DATE	ALTERED	R.P.SINGH
04	27.12.18	CHD & APPD	SSK & KRS

DETAIL-J INCLUDED

DCP No.802441

CAUTION: The information on this document is the property of BHARAT HEAVY ELECTRICALS LTD. It must not be used directly or indirectly in any way detrimental to the interest of the company.

TYPE OF PRODUCT
OR NAME OF
CUSTOMER/PROJECT

DWG. REDRAWN WITH REV. 04 ON 27.12.18

BHARAT HEAVY ELECTRICALS LTD.,
UNIT: HIGH PRESSURE BOILER PLANT.
TIRUCHIRAPALLI-620014.
365-121

	NAME	SIGN	DATE	NO.OF VAR.
DRN	V.BAIRAVAN		11.08.12	
CHD	K.RAJASEKARAN		11.08.12	
APPD	M.RAJAKUMAR		11.08.12	

DEPT	SCALE	WEIGHT (KG).	REFERENCE INFORMATIONS	NO. OF ITEMS
VL	N T S	15.51		
CODE 320				

TITLE	CARD CODE	DRAWING NO.	REV
YOKE FOR GK14 3"/1500CLASS	U 01	3-V-0000-21315	04

Size A3

ALL DIMENSIONS ARE IN MILLIMETRES. FOR TOLERANCES OF UNTOLERANCED DIMENSIONS DURING MANUFACTURE REFER RELEVANT QCP / QP.

DRAWING NO. 3-V-0000-21315

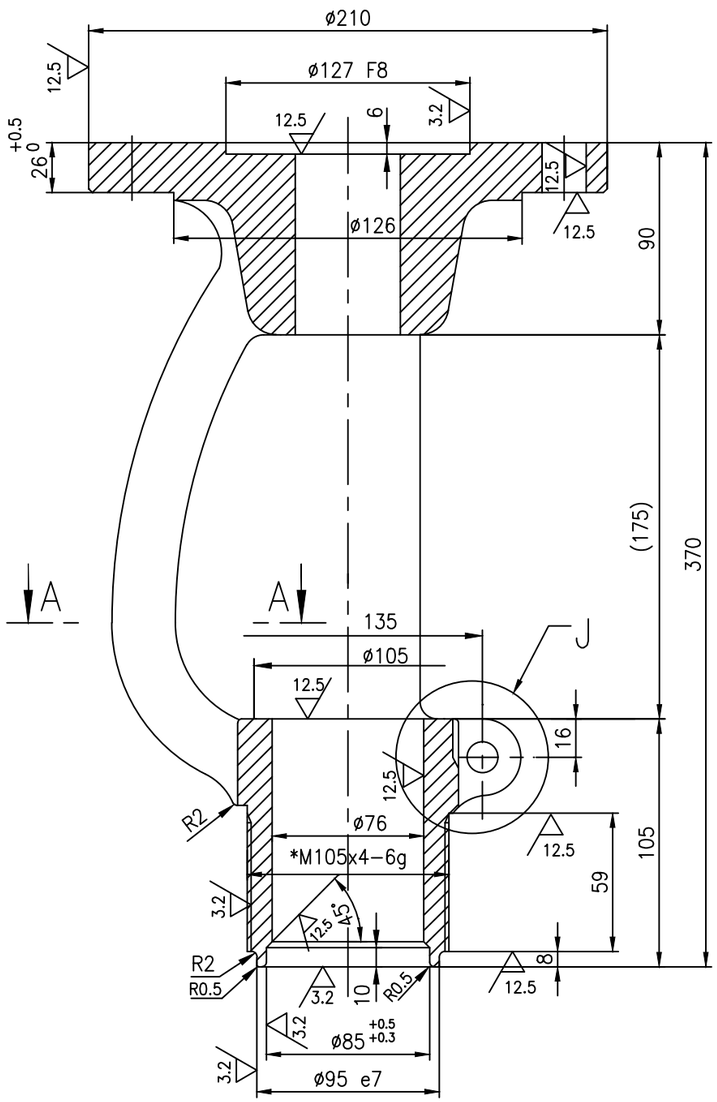

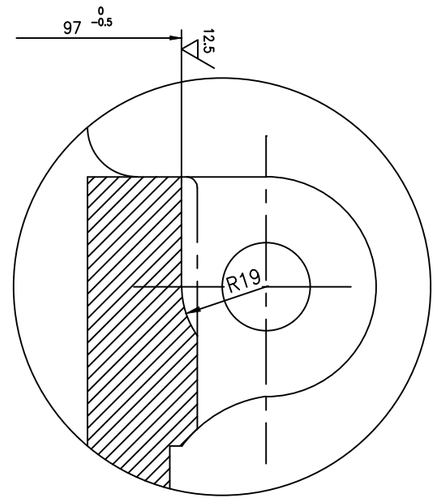

DETAIL-J

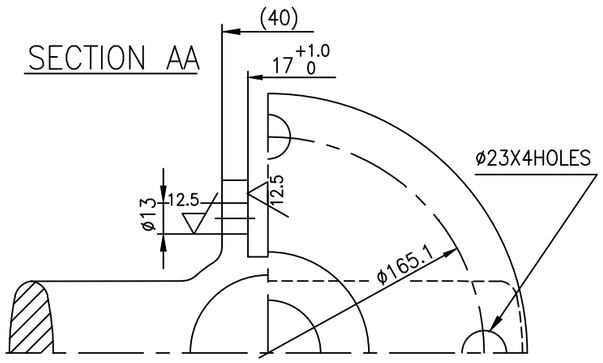

12

ø127-F8	+0.106
	+0.043
ø95-e7	-0.072
	-0.107

NOTES:

* 1. Ni PLATING TO A THICKNESS OF 25 TO 35 MICRONS.

SL. No.	DRAWING No.	COMP. CODE	MATL. SPECN		SCRAP SORT
03	3-V-G393-21315/1	931255720000	A217 C12A,NT PRODUCT ATTEST		20
02	3-V-G212-21315/3	931211920000	A217 WC6,NT PRODUCT ATTEST		20
01	3-V-G209-21315/2	931211900000	A216 WCB,AN PRODUCT ATTEST		10

NO OFF	DESCRIPTION	MATL CODE	MATL SPECN	HEAT TREATMENT	SCRAP SORT	NET WT (kg)	GROSS WT (kg)	DRAWING No	ITEM No

REV	DATE	ALTERED	R.P.SINGH
04	27.12.18	CHD & APPD	SSK & KRS

DETAIL-J INCLUDED

DCP No.802441

CAUTION: The information on this document is the property of BHARAT HEAVY ELECTRICALS LTD. It must not be used directly or indirectly in any way detrimental to the interest of the company.

TYPE OF PRODUCT
OR NAME OF
CUSTOMER/PROJECT

DWG. REDRAWN WITH REV. 04 ON 27.12.18

BHARAT HEAVY ELECTRICALS LTD.,
UNIT: HIGH PRESSURE BOILER PLANT.
TIRUCHIRAPALLI-620014.
365-121

	NAME	SIGN	DATE	NO.OF VAR.
DRN	V.BAIRAVAN		11.08.12	
CHD	K.RAJASEKARAN		11.08.12	
APPD	M.RAJAKUMAR		11.08.12	

DEPT	SCALE	WEIGHT (KG).	REFERENCE INFORMATIONS	NO. OF ITEMS
VL	N T S	15.51		
CODE 320				

TITLE	CARD CODE	DRAWING NO.	REV
YOKE FOR GK14 3"/1500CLASS	U 01	3-V-0000-21315	04

Size A3

DRAWING NO. 2-V-0000-12372

ALL DIMENSIONS ARE IN MILLIMETRES. FOR TOLERANCES OF UNTOLERANCED DIMENSIONS DURING MANUFACTURE REFER RELEVANT QCP / QP

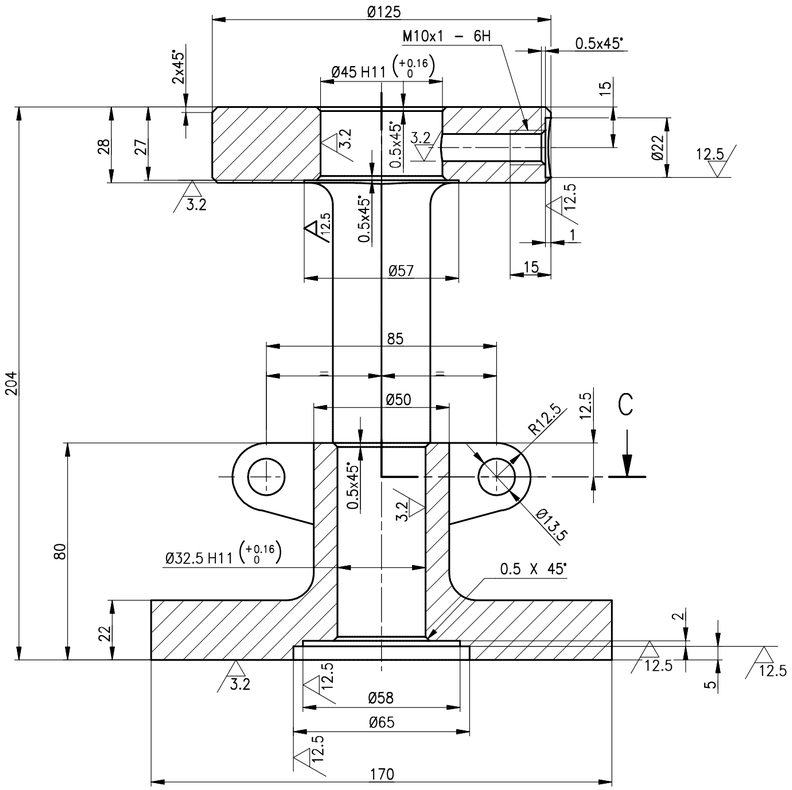

SECTION A–A

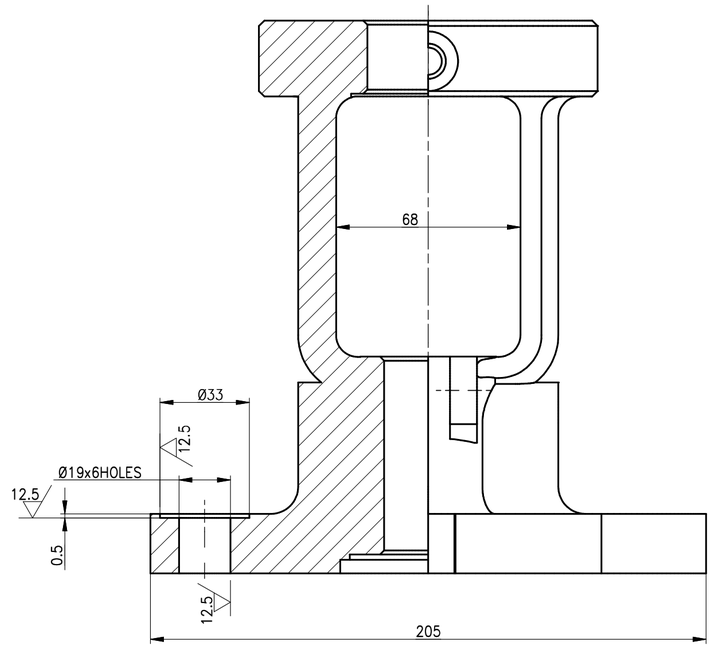

SECTION B–B

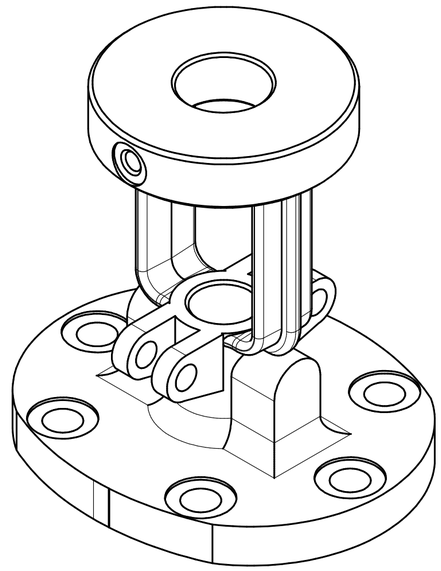

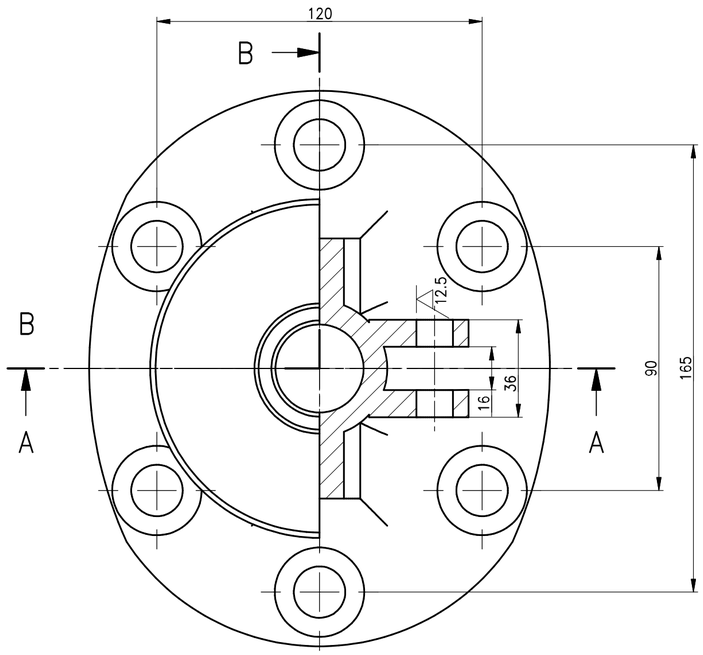

SECTION C–C

SL NO	DESCRIPTION	MATL CODE	MATL SPECN	HEAT TREATMENT	SCRAP SORT	NET WT (kg)	GROSS WT (kg)	DRAWING No / COMP. CODE	ITEM No
05	–	–	SA315 CF3M, CERTIFY	SH	46	8.5	9.0	2.V.NR43.12372 / 93 206 704 0000	05
04	–	–	SA315 CF8M, CERTIFY	SH	46	8.5	9.0	2.V.NQ73.12372 / 93 206 143 0000	05
03	–	–	SA315 CF8, CERTIFY	SH	46	8.5	9.0	2.V.NP45.12372/1 / 93 205 648 0000	05
02	–	–	SA217 WC9, CERTIFY	NT	20	8.5	9.0	2.V.NP44.12372/1 / 93 205 647 0000	05
01	–	–	SA216 WCB, CERTIFY	NR	10	8.5	9.0	2.V.NP43.12372/1 / 93 205 646 0000	05

DCP No.	ALTD:	APPD:	DCP No.	ALTD:	APPD:
–	TS	MK	–	TS	SSK
	CHD: RPS	DT: 12.09.24		CHD: RPS	DT: 30.10.21
REV 03	SL. NO. 05 INCLUDED.		REV 02	SL. NO. 04 INCLUDED.	
ZONE –			ZONE –		

CAUTION: The information on this document is the property of BHARAT HEAVY ELECTRICALS LTD. It must not be used directly or indirectly in any way detrimental to the interest of the company.

TYPE OF PRODUCT
OR NAME OF
CUSTOMER/PROJECT

BHARAT HEAVY ELECTRICALS LTD.,
UNIT: HIGH PRESSURE BOILER PLANT.
TIRUCHIRAPALLI-620014.
365-190
02.03.2021

	NAME	SIGN	DATE	NO. OF VAR.
DRN	R.P.SINGH		22.11.19	
CHD	SAMEER BHAT		22.11.19	
APPD	S.SATHEES		22.11.19	

DEPT VL
CODE 320
SCALE NTS
WEIGHT (KG). –
REFERENCE INFORMATIONS
NO. OF ITEMS

TITLE
YOKE COVER
2 1/2"-C150 GV

CARD CODE U 01

DRAWING NO. 2-V-0000-12372

REV 03

Size A2

DRAWING NO. 2-V-0000-02433

ALL DIMENSIONS ARE IN MILLIMETRES. FOR TOLERANCES OF UNTOLERANCED DIMENSIONS DURING MANUFACTURE REFER RELEVANT QCP / QP

SECTION–AA

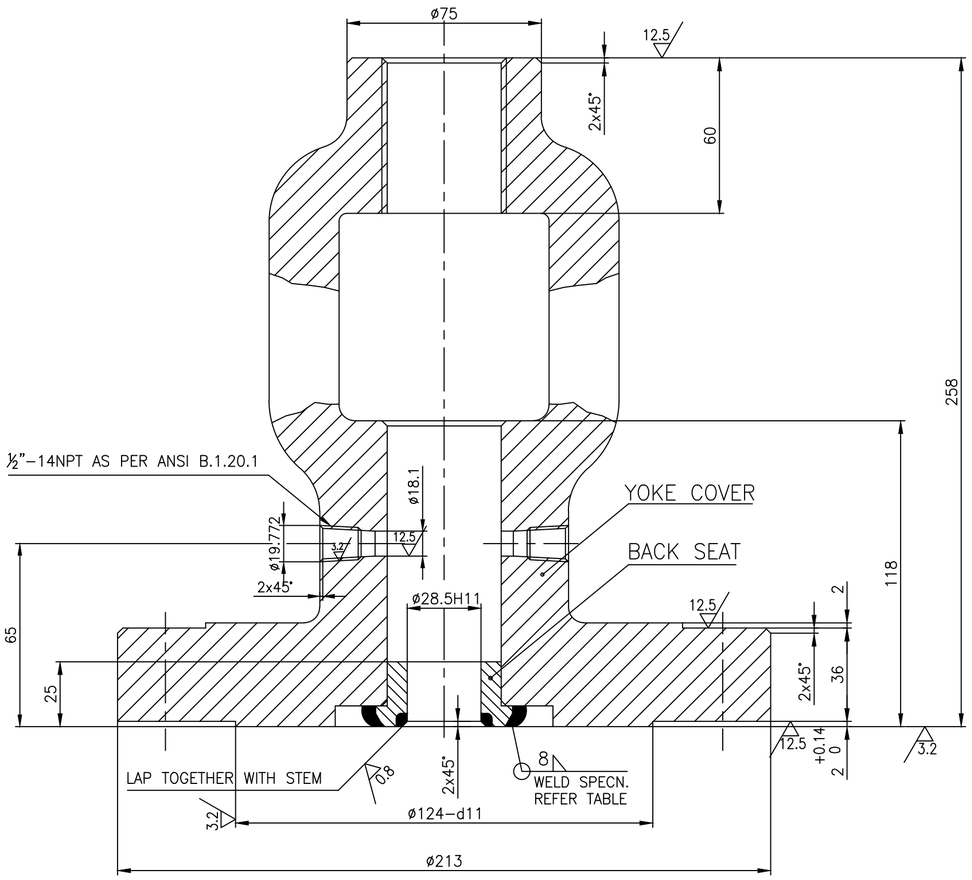

SECTION–BB

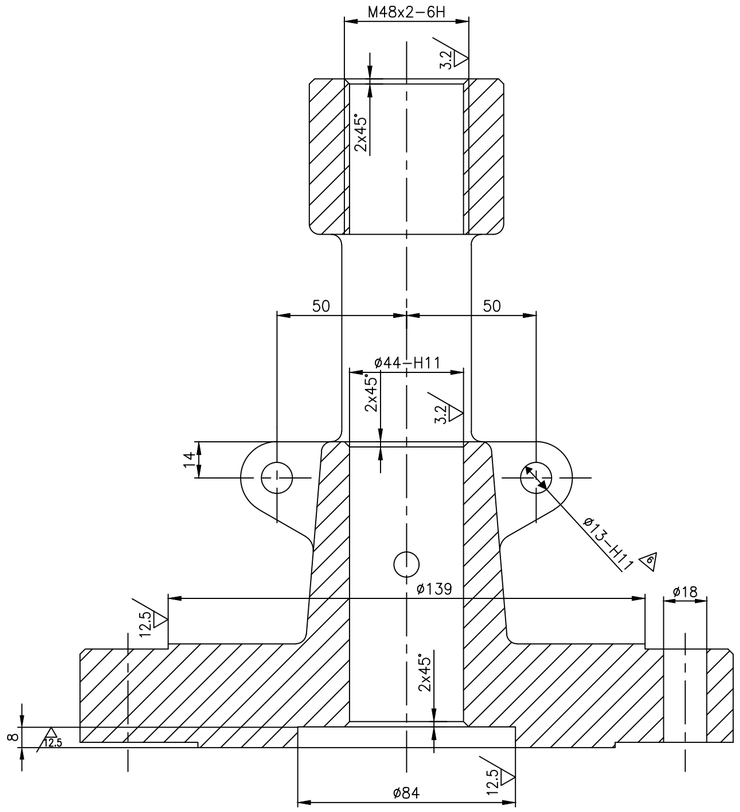

ø28.5–H11	+0.130 / 0
ø44–H11	+0.160 / 0
ø124–d11	–0.145 / –0.395
ø13–H11	+0.110 / 0

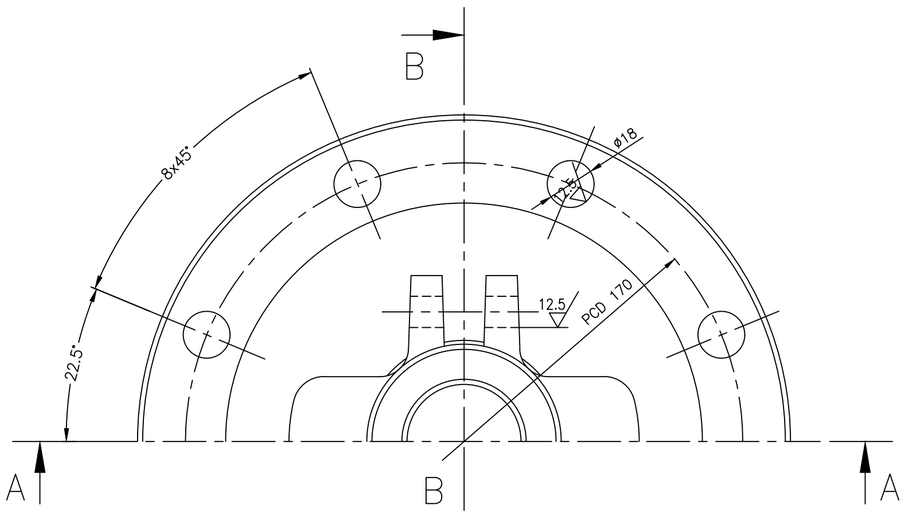

SL. No.	WELD / DIMENSIONS	MATL CODE	MATL SPECN	HEAT TREATMENT	SCRAP SORT	NET WT (kg)	GROSS WT (kg)	DRAWING No / COMP. CODE	ITEM No
06	E347	92 008 208	ASTM A216 WCB CERTIFY	NORMALISED	10	18.95	24.78	2.V.U585.02433/01 932040370000	006
05	E309	92 008 208	ASTM A216 WCB CERTIFY	NORMALISED	10	18.95	24.78	2.V.U256.02433/01 931302950000	006
04	E347	92 200 988	ASTM A351 CF8M CERTIFY	S H	46	18.95	24.78	2.V.P345.02433/01 931088180000	006
03	E347	92 008 444	ASTM A351 CF8 CERTIFY	S H	46	18.95	24.78	2.V.P342.02433/01 931088170000	006
02	E6013	92 008 208	ASTM A216 WCB CERTIFY	NORMALISED	10	18.95	24.78	2.V.2931.02433/01 931067700000	006
01	E6013	92 008 208	ASTM A216 WCB CERTIFY	NORMALISED	10	18.95	24.78	2.V.2685.02433/02 930612090000	006

REV	DATE	ALTERED	
06	25.10.18		R.P.SINGH
		CHD & APPD	SSK & KRS
ZONE	Ø13–H11 WAS Ø12–H11		
05	14.06.16	ALTERED	K.NAVIN
		CHD & APPD	MS & SSK
	SL.No. 06 INCLUDED		
04	03.08.04	ALTERED	K.P.LEON
		CHD & APPD	
ZONE	SL. NUMBER 05 INCLUDED.		

CAUTION: The information on this document is the property of BHARAT HEAVY ELECTRICALS LTD. It must not be used directly or indirectly in any way detrimental to the interest of the company.

TYPE OF PRODUCT OR NAME OF CUSTOMER/PROJECT: DRAWING REDRAWN WITH 04 REVISION ON 03.08.04

BHARAT HEAVY ELECTRICALS LTD.,
UNIT: HIGH PRESSURE BOILER PLANT.
TIRUCHIRAPALLI -620014.
365–120

	NAME	SIGN	DATE	NO.OF VAR.
DRN	K.P.LEON		03.08.04	
CHD	T.R.RAMAMURTHY		03.08.04	
APPD	P.BOOMINATHAN		03.08.04	

DEPT VL
CODE 320
SCALE NTS
WEIGHT (KG). REFER TABLE
REFERENCE INFORMATIONS: CAD REF: C202433
NO. OF ITEMS

TITLE: YOKE COVER ASSY. (3"–300C GLOBE)
CARD CODE: U 01
DRAWING NO. 2–V–0000–02433
REV 06

Size A2

DRAWING NO: 2-V-0000-12461

ALL DIMENSIONS ARE IN MILLIMETRES. FOR TOLERANCES OF UNTOLERANCED DIMENSIONS DURING MANUFACTURE REFER RELEVANT QCP / QP

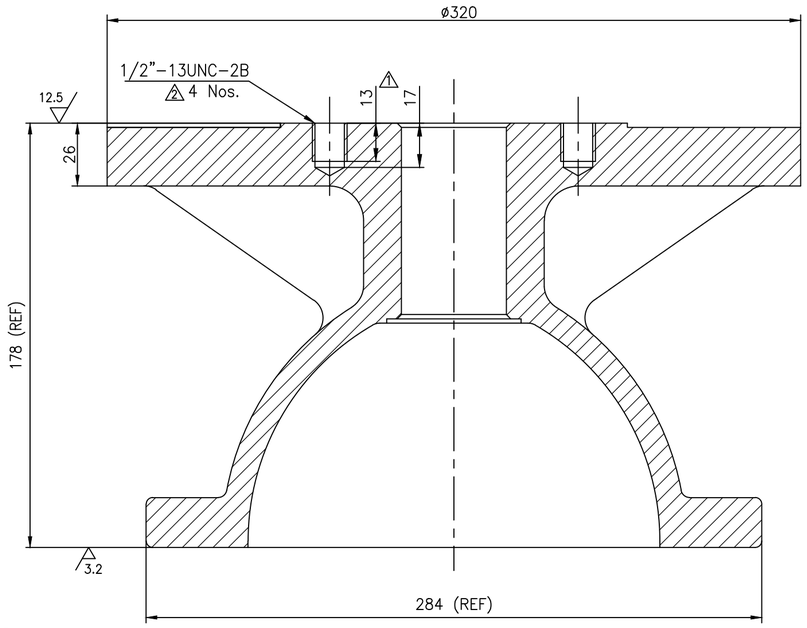

SECTION-AA

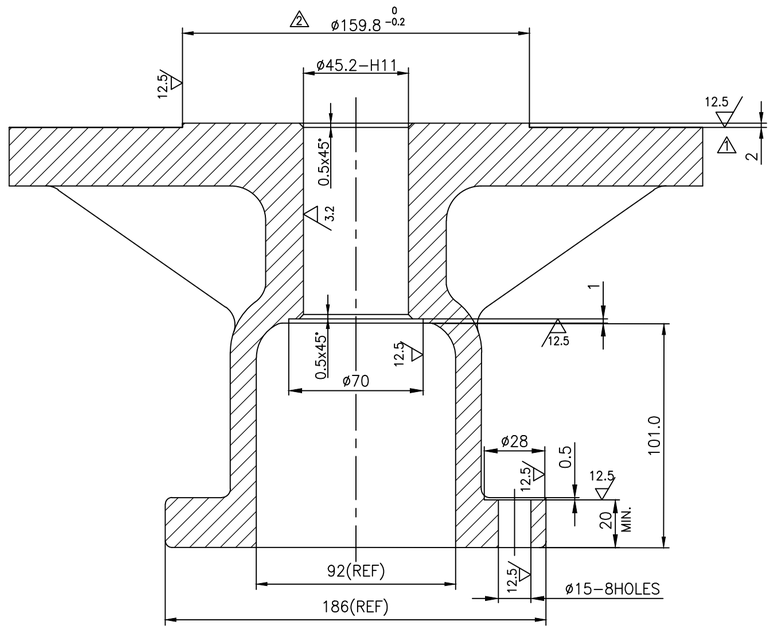

SECTION-BB

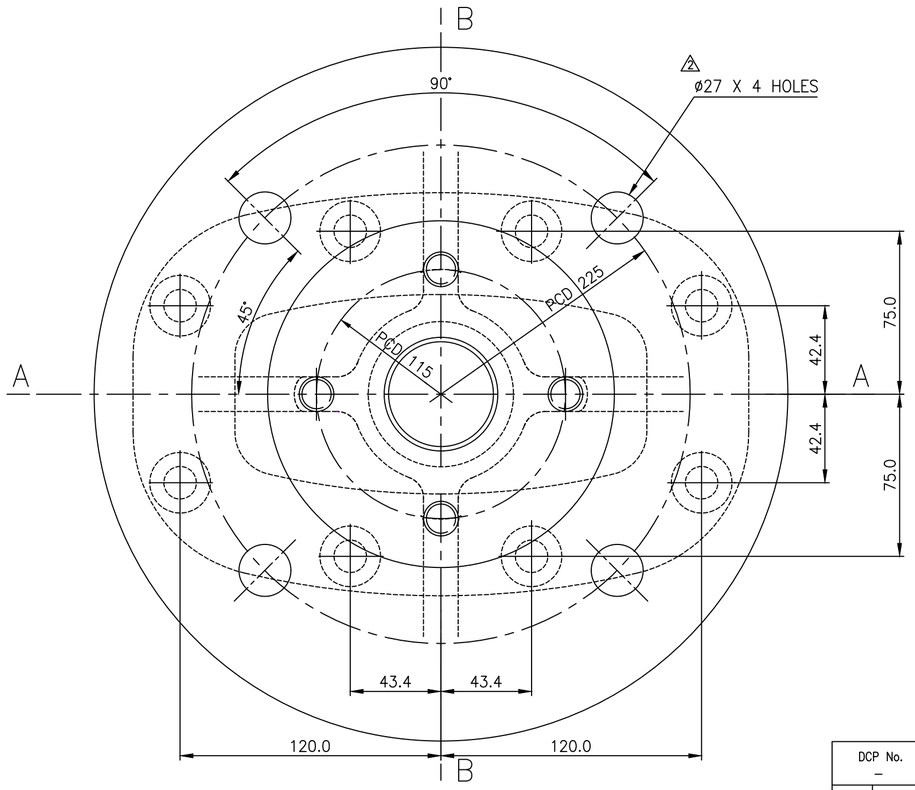

NOTES-

01. BREAK ALL SHARP CORNERS.

ø45.2 - H11	+0.160
	0

No OFF	DESCRIPTION	MATL CODE	MATL SPECN	HEAT TREATMENT	SCRAP SORT	NET WT (kg)	GROSS WT (kg)	DRAWING No. / COMP. CODE	ITEM No
01	CASTING	92 206 080	A216 WCB CERTIFY	NORMALISED	10	27.0	32.0	2-V-NQ43-12461/2 / 93 205 950 0000	007

TYPE OF PRODUCT
OR NAME OF
CUSTOMER/PROJECT

BHARAT HEAVY ELECTRICALS LTD.,
UNIT: HIGH PRESSURE BOILER PLANT.
TIRUCHIRAPALLI-620014.
365-190
02.03.2021

	NAME	SIGN	DATE	NO.OF VAR.
DRN	R.P.SINGH		28.01.21	—
CHD	SAMEER BHAT		28.01.21	
APPD	S.SATHEESKUMAR		28.01.21	

DEPT: VL
CODE: 320
SCALE: NTS
WEIGHT (KG): REF. TABLE
REFERENCE INFORMATIONS
NO. OF ITEMS: —

TITLE: BONNET (6"-C150-GV-PN)
CARD CODE: U 01
DRAWING NO.: 2-V-0000-12461
REV: 02

DCP No.	ALTD: TS	APPD: SSK
–	CHD: RPS	DT: 14.07.22

REV 02 — DIMENSIONS ø159.8 0 -0.2 WAS ø160-d11, HOLE ø27 WAS M24 AND NO. OF HOLES FOR 1/2" 13UNC-2B CHANGED TO 4 FROM 2. — ZONE –

DCP No.	ALTD: TS	APPD: SSK
–	CHD: RPS	DT: 12.02.21

REV 01 — DIMENSIONS 13 AND 17 WERE 16 AND 20. DIMENSIONS ø160 AND 2 INCLUDED. WEIGHT UPDATED. — ZONE –

CAUTION: The information on this document is the property of BHARAT HEAVY ELECTRICALS LTD. It must not be used directly or indirectly in any way detrimental to the interest of the company.

Size A2

ALL DIMENSIONS ARE IN MILLIMETRES. FOR TOLERANCES OF UNTOLERANCED DIMENSIONS DURING MANUFACTURE REFER RELEVANT QCP / QP.

DRAWING NO: 3-V-0000-24588

Sl. No.	DRAWING NUMBER	COMPONENT CODE	DIMENSIONS MATL.SPECN.	DIMENSIONS SIZE	DIMENSIONS Wt.(kg)	SCRAP SORT	DIMENSIONS øD	DIMENSIONS L	DIMENSIONS L1	DIMENSIONS L2	WEIGHT IN Kgs.	APPLICABLE TYPE
01.	3-V-N205-24588	93 201 124 0000	SA 106 GR. B NR, CERTIFY	ø88.9 x 6.3-321	4.12	10	87	300	265	15	3.1	8"-C150-GV
02	3-V-N244-24588	93 201 125 0000		ø88.9 x 6.3-356	4.56	10	87	335	275	20	3.5	8"-C300-GV
03	3-V-N206-24588	93 201 126 0000		ø88.9 x 6.3-405	5.20	10	87	384	330	14	4.0	10"-C150-GV
04	3-V-N207-24588	93 201 127 0000		ø88.9 x 6.3-465	6.04	10	87	444	383	26	5.0	12"-C150-GV
05	3-V-F504-24588	93 201 128 0000		ø88.9 x 6.3-305	3.96	10	87	284	200	20	2.9	6"-C600-GV
06	3-V-N631-24588	93 130 607 0000		ø88.9 x 6.3-475	6.05	10	87	460	383	42	5.2	12"-C300-GV
07	3-V-NC30-24588	93 205 823 0000		ø88.9 x 6.3-380	5.80	10	87	360	320	15	3.8	10"-C300-GV
08	3-V-F503-24588	93 205 827 0000		ø88.9 x 6.3-215	3.30	10	87	200	160	20	2.4	4"-C600-GV
09	3-V-N203-24588	93 206 450 0000	SA 210 GR. C NR, CERTIFY	ø63.5 x 5.6-220	1.87	10	61	200	160	20	1.59	4"-C150/C300-GV
10	3-V-N326-24588	93 206 452 0000		ø63.5 x 5.6-190	1.62	10	61	170	125	30	1.45	2-1/2"-C300, 3"-C150/C300/C600-GV
11	3-V-N201-24588	93 206 454 0000		ø63.5 x 5.6-155	1.32	10	61	135	95	30	1.1	2-1/2"-C150, 2"-C150/C300/C600-GV

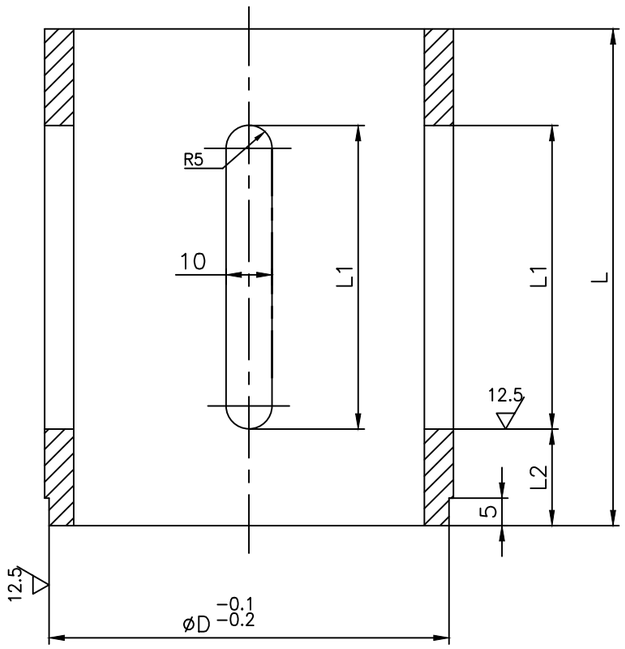

DCP No.	ALTD:	APPD:	DCP No.	ALTD:	APPD:
–	RPS	SSK	–	TRR	BOOMI
	CHD: MK	DT: 03.10.23		CHD: BOOMI	DT: 06.11.07

REV		REV	
02	SL.No. 07 TO 11 INCLUDED.	01	SL.No. 06 INCLUDED.
ZONE –		ZONE –	

CAUTION: The information on this document is the property of BHARAT HEAVY ELECTRICALS LTD. It must not be used directly or indirectly in any way detrimental to the interest of the company.

NO OFF	DESCRIPTION	MATL CODE	MATL SPECN	HEAT TREATMENT	SCRAP SORT	NET WT (kg)	GROSS WT (kg)	DRAWING No. / COMP. CODE	ITEM No

TYPE OF PRODUCT OR NAME OF CUSTOMER/PROJECT: CS

BHARAT HEAVY ELECTRICALS LTD.,
UNIT: HIGH PRESSURE BOILER PLANT.
TIRUCHIRAPALLI-620014.
365-191
02.03.2021

	NAME	SIGN	DATE	NO.OF VAR.
DRN	T.R.RAMAMOORTHY		06.11.07	—
CHD	T.R.RAMAMOORTHY		06.11.07	
APPD	P.BOOMINATHAN		06.11.07	

DEPT: VL
CODE: 320
SCALE: NTS
WEIGHT (KG).: REFER TABLE
REFERENCE INFORMATIONS
NO. OF ITEMS: —

TITLE: TUBE
CARD CODE: U 01
DRAWING NO.: 3-V-0000-24588
REV: 02

Size A3

ALL DIMENSIONS ARE IN MILLIMETRES. FOR TOLERANCES OF UNTOLERANCED DIMENSIONS DURING MANUFACTURE REFER RELEVANT QCP / QP.

DRAWING NO. 3-V-0000-09859/6

SL. No.	DRAWING No.	COMP. CODE	RAW MATERIAL SIZE	RAW MATERIAL MATL.SPECN.	RAW MATERIAL CODE	RAW MATERIAL GROSS WT(KG)	DIMENSIONS L	DIMENSIONS L1	DIMENSIONS ød	DIMENSIONS Md	NET WT(Kg.)	VALVE TYPE
01	3-V-K011-09859/01	93 101 811 0000	820xø16	IS 2062 Fe-410WB, NR, CERTIFY	15 004 106	1.29	810	25	16	12	1.27	10"/C150
02	3-V-K163-09859/01	93 102 553 0000	720xø16		15 004 106	1.14	710	25	16	12	1.12	8"/300
03	3-V-K268-09859/01	93 102 987 0000	420xø16		15 004 106	0.66	410	25	16	12	0.64	65/40 GV
04	3-V-K319-09859/01	93 103 427 0000	485xø16		15 004 106	0.765	475	25	16	12	0.74	4"-C150 & 3"-C300
05	3-V-K324-09859	93 103 461 0000	380xø16		15 004 106	0.60	370	25	16	12	0.58	2"/C800
06	3-V-U109-09859	93 110 296 0000	863xø16		15 004 106	1.35	853	25	16	12	1.30	12"-C300
07	3-V-C757-09859	93 130 322 0000	620xø16		15 004 106	0.98	600	25	16	12	0.91	10"-1500 C

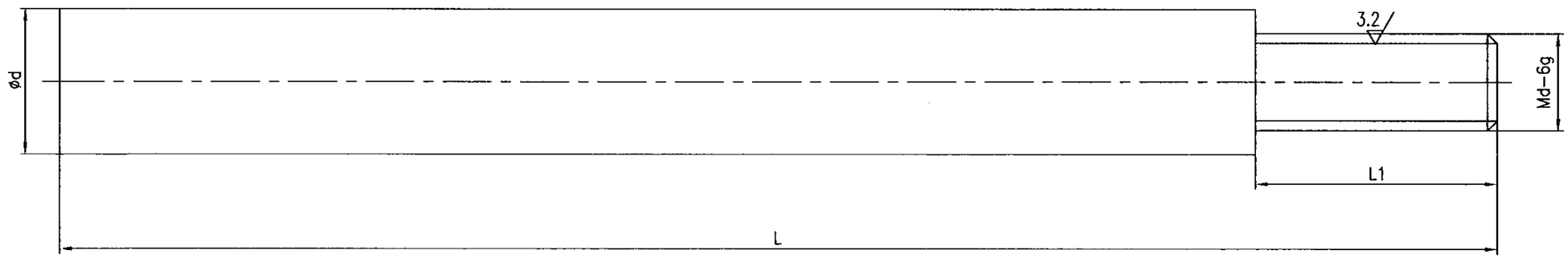

NO OFF	DESCRIPTION	MATL CODE	MATL SPECN	HEAT TREATMENT	SCRAP SORT	NET WT (kg)	GROSS WT (kg)	DRAWING No	ITEM No

TYPE OF PRODUCT
OR NAME OF
CUSTOMER/PROJECT

DRG. REDRAWN WITH REV.6 ON 9.08.04

BHARAT HEAVY ELECTRICALS LTD.
UNIT: HIGH PRESSURE BOILER PLANT.
TIRUCHIRAPALLI 620014.
365-121

	NAME	SIGN	DATE	NO.OF VAR.
DRN	V.BAIRAVAN		9.08.04	
CHD	R.L.N		9.08.04	
APPD	M.RAJKUMAR		9.08.04	

DEPT VL
CODE
SCALE NTS
WEIGHT (KG).
REFERENCE INFORMATIONS
CAD REFER:C309859
NO. OF ITEMS

TITLE: FIXING CLAMP
CARD CODE: U 01
DRAWING NO. 3-V-0000-09859
REV 6

REV	DATE	ALTERED V.B
6	9.08.04	CHD & APPD M.R.K

SL No.07 INCLUDED

CAUTION: The information on this document is the property of BHARAT HEAVY ELECTRICALS LTD. It must not be used directly or indirectly in any way detrimental to the interest of the company.

Size A3

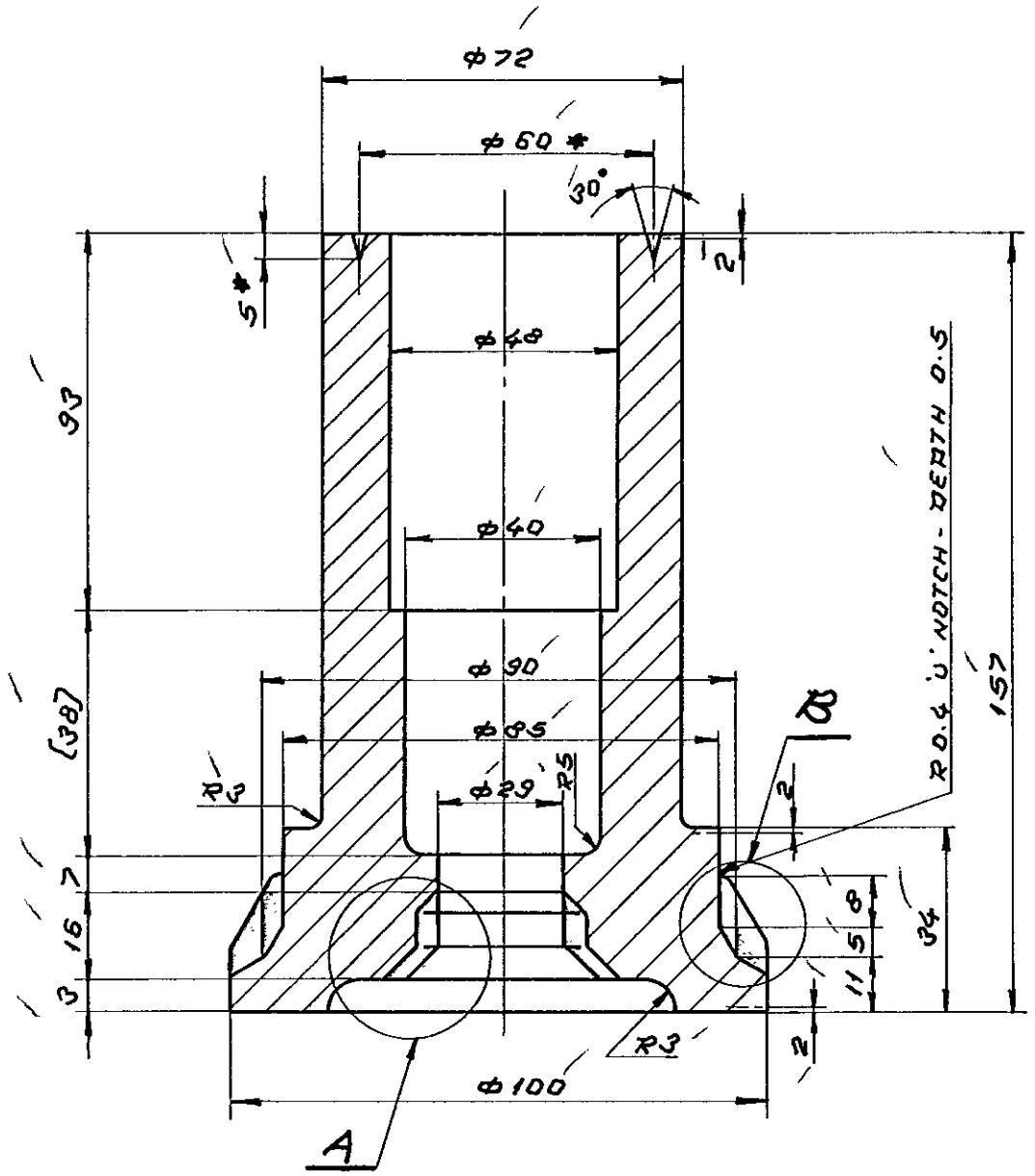

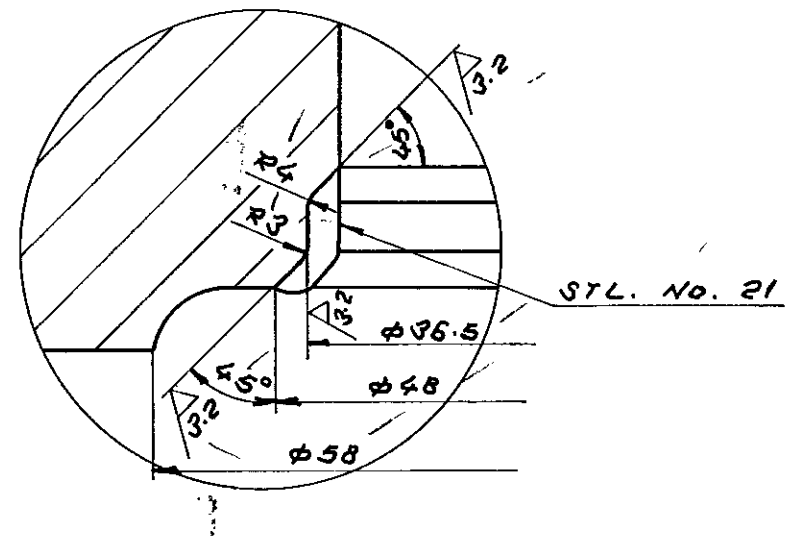

DETAIL - A

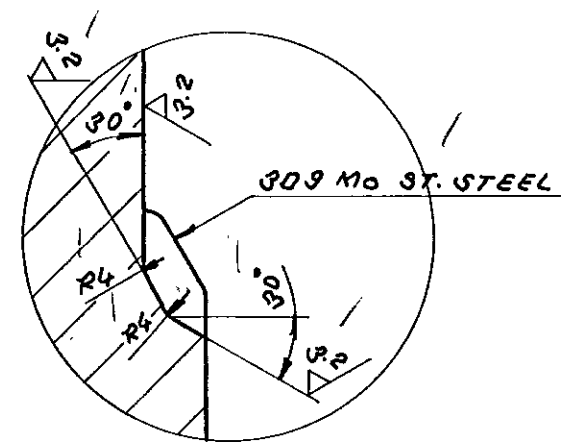

DETAIL - B

③

12.5 / 3.2

MF 758086

SL. No.	DRG No.	MATL. SPECN.	SUGGESTED SIZE	COMP. CODE	GROSS wt [kg]
2	3-V-G060-20195/1	A 182-F22, NT, PRODUCT ATTEST	φ105 X 167	93111965800 0	11.85
1	3-V-G057-20195/1	SA 105, NR, PRODUCT ATTEST	φ105 X 167	93111964800 0	11.85

NOTES:

1. * MARKED IS FOR A 182-F22 MATL. ONLY FOR IDENTIFICATION
2. LATEST APPLICABLE QUALITY WORK INSTRUCTIONS SHALL BE FOLLOWED IN ALL RESPECTS.

REV	DATE	ALTERED / CHECKED & APPD
01	20-12-95	
ZONE	NOTE 2 ALTERED DCN NO:- TA1045	

BHARAT HEAVY ELECTRICALS LTD.,
BOILER PLANT UNIT, TIRUCHIRAPALLI-14

FIRST ANGLE	SCALE	DRAWN	15/2/85	TOTAL NET WT. (kg)	
	NTS	CHECKED	M.R.K.	TYPE	
		APPROVED	V.B.		
ALL DIMENSIONS IN MILLIMETRES		DATE	26.2.85	TOA DRG No.	4-E 59502 (1149)

TITLE: ROUGH MACHINING 65/1500 BONNET

DRAWING NO. 3-V-0000-20195 REVISION 1

CAUTION
THE INFORMATION CONTAINED IN THIS DRAWING IS THE PROPERTY OF BHARAT HEAVY ELECTRICALS LTD., BOILER PLANT UNIT, TIRUCHY-14 AND SHALL NOT BE USED WITHOUT THEIR EXPRESS WRITTEN PERMISSION IN ANY FORM OR PART THEREOF FOR ANY OTHER PURPOSE THAN FOR WHICH IT IS SENT TO YOU.

05-229

CORPORATE DRG ID
TP-DG-3-V-0000-20195
CORPORATE DRG ID
TP-DG-3-V-0000-20195

ALL DIMENSIONS ARE IN MILLIMETRES.
FOR TOLERANCES OF UNTOLERANCED DIMENSIONS DURING MANUFACTURE REFER RELEVANT QCP/QP

DCP No.	ALTD: RPS	APPD: SSK	DCP No.	ALTD: RPS	APPD: SSK
802542	CHD: SAB	DT: 22.01.20	802769	CHD: MK	DT: 12.06.23

REV		REV	
02	DIMENSIONS 29.5, (ø72±0.2) AND 110 WERE 27, ø73±0.2 AND 107.5 RESPECTIVELY.	03	DIMENSION ø16 MAX. INCLUDED.
ZONE –		ZONE –	

5 12.5 / 3.2

CAUTION: The information on this document is the property of BHARAT HEAVY ELECTRICALS LTD. It must not be used directly or indirectly in any way detrimental to the interest of the company.

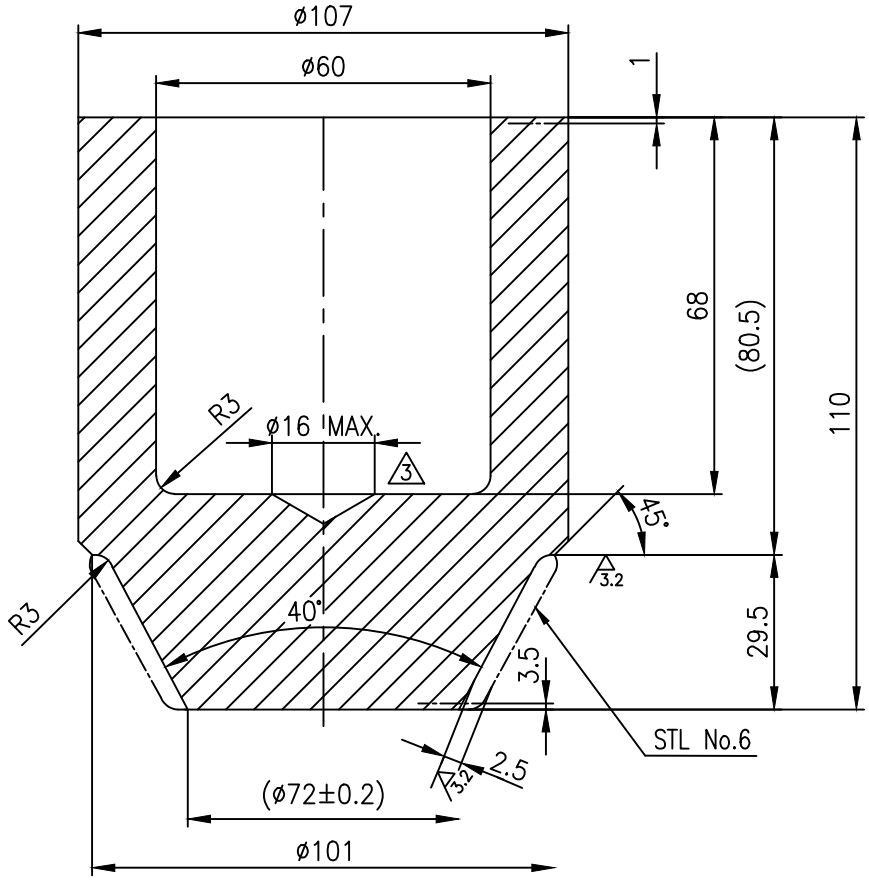

NOTE:–

1. LATEST APPLICABLE QUALITY WORK INSTRUCTIONS SHALL BE FOLLOWED IN ALL RESPECTS.

NO OF	DESCRIPTION	MATL CODE	MATL SPECN	HEAT TREATMENT	SCRAP SORT	NET WT (kg)	GROSS WT (kg)	DRAWING No. / COMP. CODE	ITEM No
01	ø110x118	–	A182 F22 CL.3 PROD. ATTEST	NT	20	4.0	8.8	4–V–G001–18016/3 / 93 111 861 8000	–

BHARAT HEAVY ELECTRICALS LTD.,
UNIT: HIGH PRESSURE BOILER PLANT.
TIRUCHIRAPALLI 620014.
365–192
02.03.2021

	NAME	SIGN	DATE	NO.OF VAR
DRN	K.R.SAMY		05.11.84	—
CHD	M.R.K		16.11.84	
APPD	V.B		16.11.84	

DEPT	SCALE	WEIGHT (KG).	REFERENCE INFORMATIONS	NO. OF ITEMS
VL	NTS	–		—
CODE 320				

TITLE	CARD CODE	DRAWING NO.	REV
DISC (ROUGH) 100/1500 CL	U 01	4–V–G001–18016	03

Size A4

ALL DIMENSIONS ARE IN MILLIMETRES.
FOR TOLERANCES OF UNTOLERANCED DIMENSIONS DURING MANUFACTURE REFER RELEVANT QCP/QP

DCP No.	ALTD: RPS	APPD: SSK	DCP No.	ALTD: RPS	APPD: SSK
802542	CHD: SAB	DT: 22.01.20	802769	CHD: MK	DT: 12.06.23

REV		REV	
02	DIMENSIONS 29.5, (ø72±0.2) AND 110 WERE 27, ø73±0.2 AND 107.5 RESPECTIVELY.	03	DIMENSION ø16 MAX. INCLUDED.
ZONE –		ZONE –	

5 12.5 / 3.2

CAUTION: The information on this document is the property of BHARAT HEAVY ELECTRICALS LTD. It must not be used directly or indirectly in any way detrimental to the interest of the company.

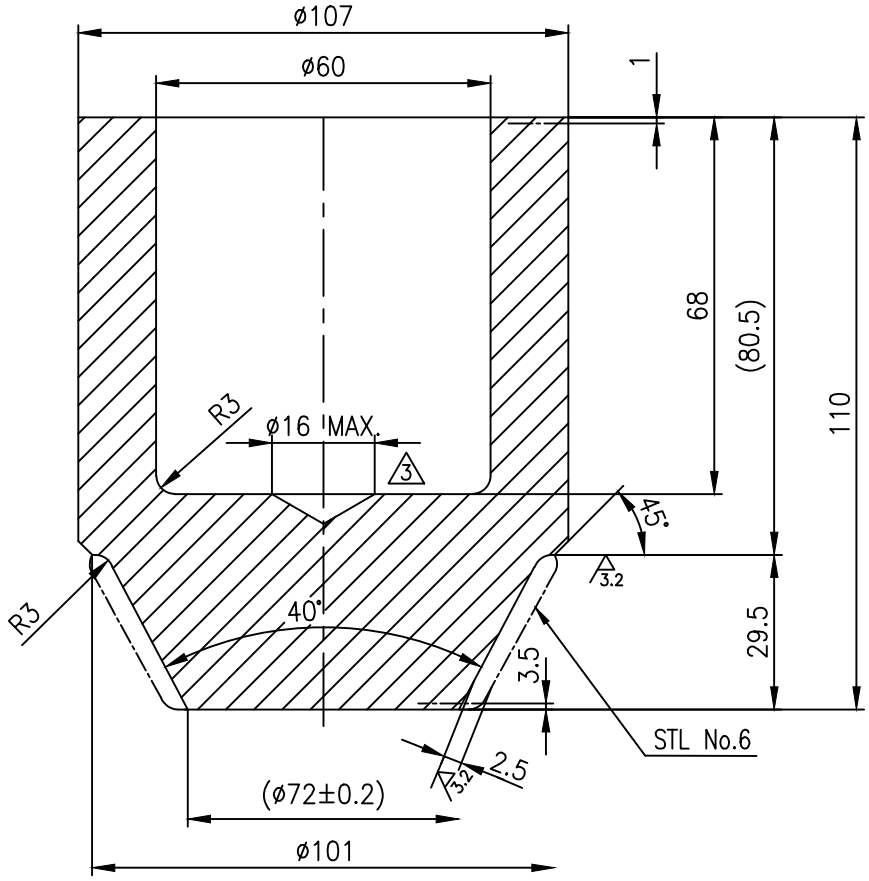

NOTE:–

1. LATEST APPLICABLE QUALITY WORK INSTRUCTIONS SHALL BE FOLLOWED IN ALL RESPECTS.

NO OF	DESCRIPTION	MATL CODE	MATL SPECN	HEAT TREATMENT	SCRAP SORT	NET WT (kg)	GROSS WT (kg)	DRAWING No. / COMP. CODE	ITEM No
01	ø110x118	–	A182 F22 CL.3 PROD. ATTEST	NT	20	4.0	8.8	4–V–G001–18016/3 / 93 111 861 8000	–

BHARAT HEAVY ELECTRICALS LTD.,
UNIT: HIGH PRESSURE BOILER PLANT.
TIRUCHIRAPALLI 620014.
365–192
02.03.2021

	NAME	SIGN	DATE	NO.OF VAR
DRN	K.R.SAMY		05.11.84	—
CHD	M.R.K		16.11.84	
APPD	V.B		16.11.84	

DEPT	SCALE	WEIGHT (KG).	REFERENCE INFORMATIONS	NO. OF ITEMS
VL	NTS	–		—
CODE 320				

TITLE	CARD CODE	DRAWING NO.	REV
DISC (ROUGH) 100/1500 CL	U 01	4–V–G001–18016	03

Size A4

DRAWING NO. 1-20-001-00010

ALL DIMENSIONS ARE IN MILLIMETRES. FOR TOLERANCES OF UNTOLERANCED DIMENSIONS DURING MANUFACTURE REFER RELEVANT QCP/QP

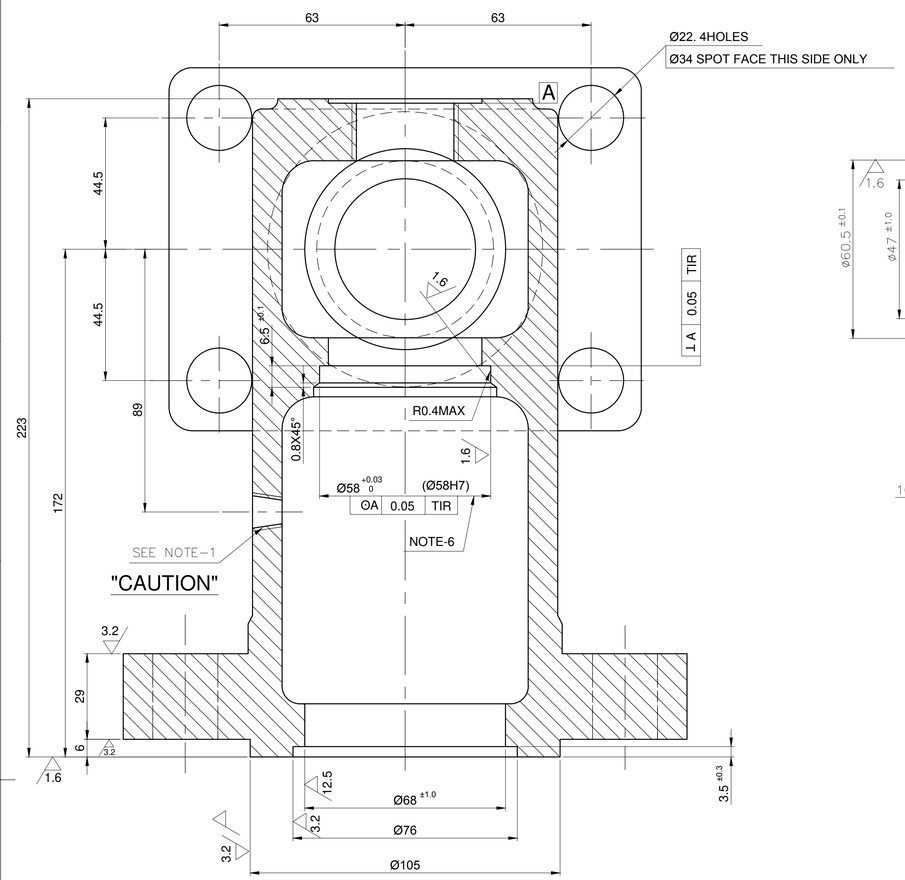

STELLITE SEAT INSERT (ITEM 02) OMITTED IN THIS VIEW

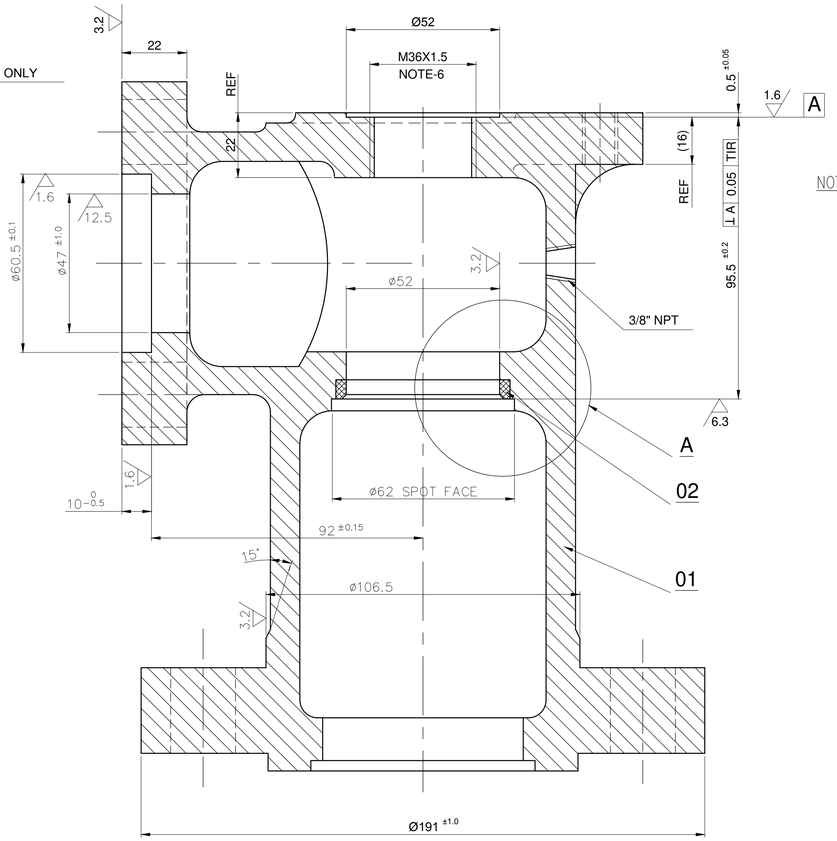

NOTES:-

1. 3/8" NPT THREADED HOLE SHOULD NOT BE MADE UNLESS OTHERWISE SPECIFICALLY CALLED FOR.
2. MINIMUM WALL THICKNESS 11MM. IS TO BE MAINTAINED.
3. FOLLOW THE PROCEDURE FOR PRESS. FITTING THE SEAT INSERT IN TO BODY.
4. SEE ASSEMBLY INSTRUTION (DRG. NO. 4-20-201-02065 & 4-20-201-02064).
5. THE INLET OF VALVE BODY SHOULD BE HYDRAULICALLY TESTED AT 90KG/CM² FOR WCB CASTING AND WC6 CASTINGS.
6. Ø58H7 & M36X1.5 ARE TO BE MACHINED IN ONE SETTING AND THE CONCENTRICITY SHOULD BE WITHIN 0.05MM.
7. IF THIS IS NOT CARRIED OUT IN ONE SETTING; METHODS SHOULD BE DEVELOPED TO ATTAIN THE CONCENTRICITY SPECIFIED.
8. INSPECTORS TO CHECK THIS ON ALL VALVE BODIES.

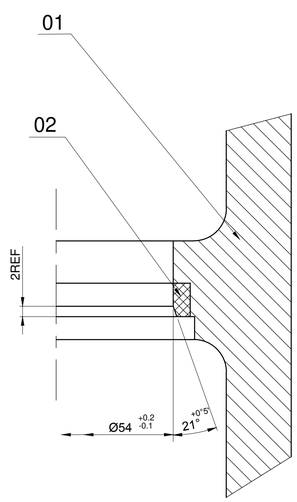

DETAIL-'A'

MACHINING OF STELLITE SEAT INSERT

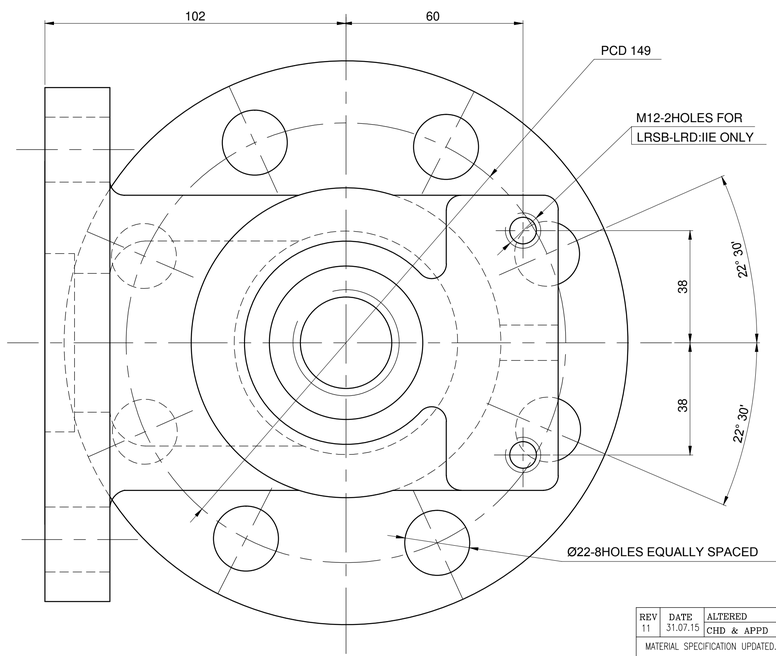

VARIANT No.	ITEM No.	DESCRIPTION	DRAWING No.	MATERIAL CODE / MATERIAL SPECIFICATION	A/C/P	UNIT WEIGHT (kg) / QUANTITY (Nos.)
	02	SEAT INSERT	4-20-201-00796	920250930000 / STELLITE		0.040 / 1
04	01	VALVE BODY (WC6- NTPC)	1-20-001-00010	920131810100 / ASTM A217 WC6	A	16.000 / 1
03	01	VALVE BODY (WCB- NTPC)	1-20-001-00190	920243870100 / ASTM A216 WCB	A	16.000 / 1
02	01	VALVE BODY (WC6)	1-20-001-00190	920131810000 / ASTM A217 WC6	A	16.000 / 1
01	01	VALVE BODY (WCB)	1-20-001-00190	920243870000 / ASTM A216 WCB	A	16.000 / 1

REV	DATE	ALTERED	
11	31.07.15	CHD & APPD	J.S S.K.G & H.R

MATERIAL SPECIFICATION UPDATED.

DCN:SB: 801968 / 5019944

CAUTION: The information on this document is the property of BHARAT HEAVY ELECTRICALS LTD. It must not be used directly or indirectly in any way detrimental to the interest of the company.

TYPE OF PRODUCT
OR NAME OF
CUSTOMER/PROJECT

BHARAT HEAVY ELECTRICALS LTD.,
UNIT: HIGH PRESSURE BOILER PLANT.
TIRUCHIRAPALLI-620014.
365-119

	NAME	SIGN	DATE
DRN	J.SANKAR	J.S	14.03.09
CHD	K.SRIDHARAN	K.S	14.03.09
APPD	S.NATARAJAN	S.N	14.03.09

DEPT SB
CODE 330
SCALE 1:1
WEIGHT (KG). 16.030
REFERENCE INFORMATIONS

TITLE: VALVE BODY
2 1/2" (NB 65MM)

CARD CODE U 01

DRAWING NO. 1-20-001-00010

REV 11

Size A1

DRAWING NO. 1-20-001-00269

ALL DIMENSIONS ARE IN MILLIMETRES. FOR TOLERANCES OF UNTOLERANCED DIMENSIONS DURING MANUFACTURE REFER RELEVANT QCP/QP

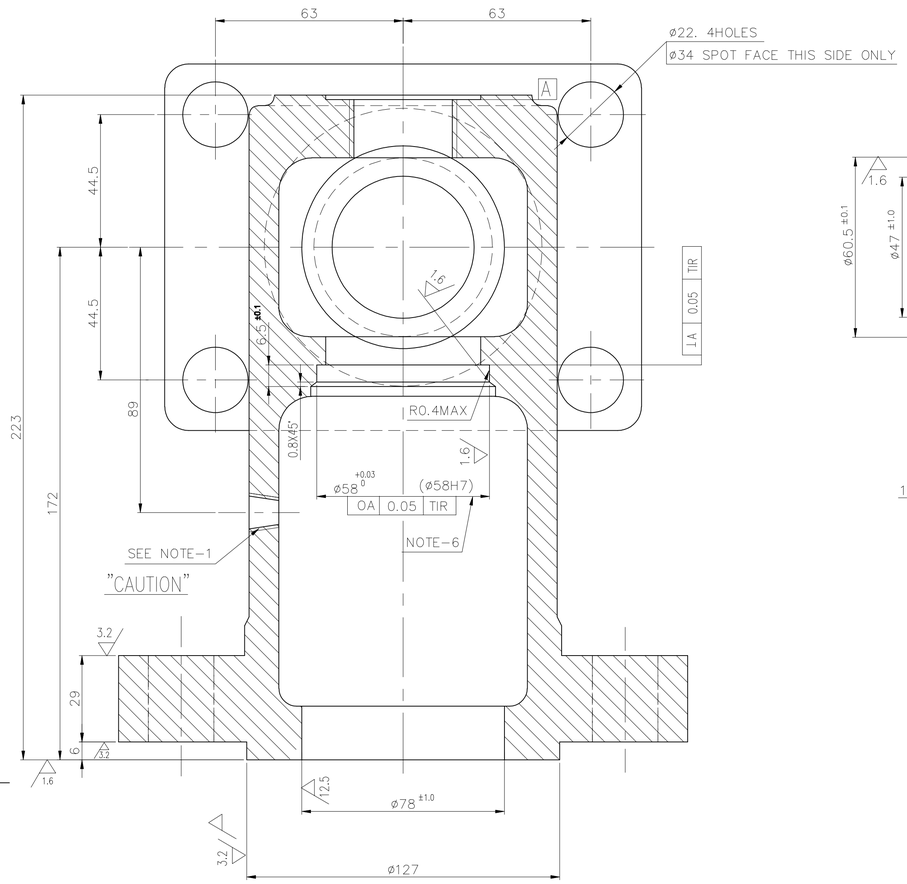

STELLITE SEAT INSERT (ITEM 02) OMITTED IN THIS VIEW

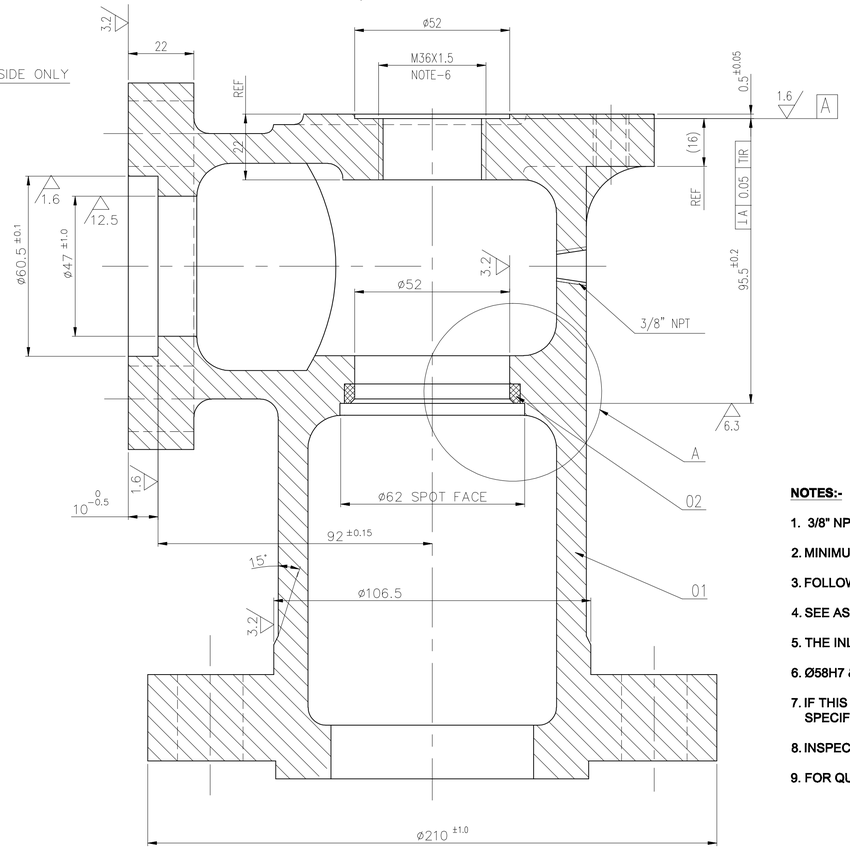

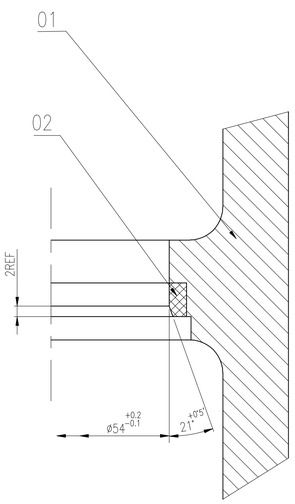

DETAIL-'A'

MACHINING OF STELLITE SEAT INSERT

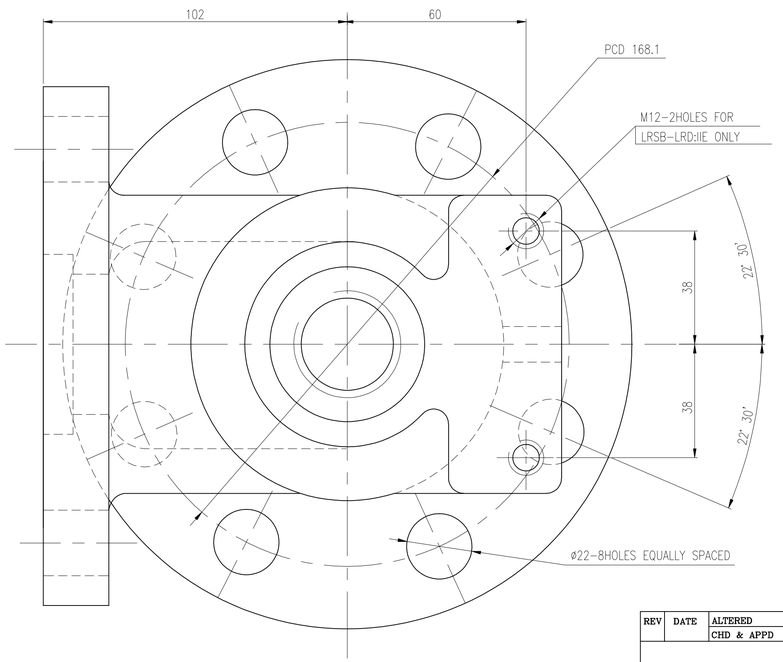

NOTES:-

1. 3/8" NPT THREADED HOLE SHOULD NOT BE MADE UNLESS OTHERWISE SPECIFICALLY CALLED FOR.
2. MINIMUM WALL THICKNESS 11mm IS TO BE MAINTAINED.
3. FOLLOW THE PROCEDURE FOR PRESS. FITTING THE SEAT INSERT IN TO BODY.
4. SEE ASSEMBLY INSTRUCTION (DRAWING. NO. 4-20-201-02065 & 4-20-201-02064).
5. THE INLET OF VALVE BODY SHOULD BE HYDRAULICALLY TESTED AT 78 kg/cm² FOR WCB AND 79.5kg/cm² for WC6.
6. Ø58H7 & M36X1.5 ARE TO BE MACHINED IN ONE SETTING AND THE CONCENTRICITY SHOULD BE WITHIN 0.05mm.
7. IF THIS IS NOT CARRIED OUT IN ONE SETTING; METHODS SHOULD BE DEVELOPED TO ATTAIN THE CONCENTRICITY SPECIFIED.
8. INSPECTORS TO CHECK THIS ON ALL VALVE BODIES.
9. FOR QUALITY REQUIREMENTS REFER LATEST QUALITY PROCEDURES.

PART CODE(WCB) :842000125402
PART CODE(WC6) :842000125403
PART CODE(NTPC-WCB) :842000125404
PART CODE(NTPC-WC6) :842000125405

VARIANT No.	ITEM No.	DESCRIPTION	DRAWING No.	RAW MATERIAL CODE	MATERIAL SPECN	A/C/P	UNIT WEIGHT(kg)	No. OFF
	2	SEART INSERT	4-20-201-00796	920250930000	STELITE 12		0.03	1
04	1	VALVE BODY CASTING(NTPC-AS)	1-20-001-00268	920131810300	A 217 WC6	A	18	1
03	1	VALVE BODY CASTING(NTPC-CS)	1-20-001-00268	920243870300	A 216 WCB	A	18	1
02	1	VALVE BODY CASTING (AS)	1-20-001-00268	920131810200	A 217 WC6	A	18	1
01	1	VALVE BODY CASTING (CS)	1-20-001-00268	920243870200	A 216 WCB	A	18	1

REV	DATE	ALTERED
		CHD & APPD

CAUTION: The information on this document is the property of BHARAT HEAVY ELECTRICALS LTD. It must not be used directly or indirectly in any way detrimental to the interest of the company.

TYPE OF PRODUCT
OR NAME OF
CUSTOMER/PROJECT

BHARAT HEAVY ELECTRICALS LTD.,
UNIT: HIGH PRESSURE BOILER PLANT.
TIRUCHIRAPALLI-620014.
365-119

	NAME	SIGN	DATE
DRN	J.SANKAR	J.S	12.09.11
CHD	K.SRIDHARAN	K.S	12.09.11
APPD	K.SRIDHARAN	K.S	12.09.11

DEPT SB
CODE 330
SCALE NTS
WEIGHT (KG). -
REFERENCE INFORMATIONS

TITLE VALVE BODY
(DM-3" 300#)
CARD CODE U 01
DRAWING NO. 1-20-001-00269
REV 00

Size A1

DRAWING NO: 1-20-201-00300

ALL DIMENSIONS ARE IN MILLIMETRES. FOR TOLERANCES OF UNTOLERANCED DIMENSIONS DURING MANUFACTURE REFER RELEVANT QCP/QP

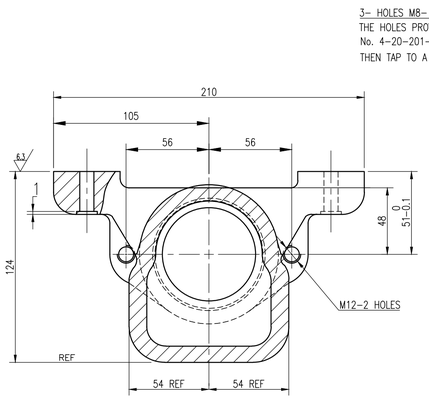

SECTION-AA

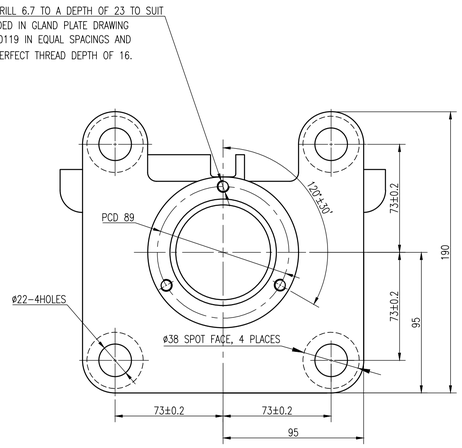

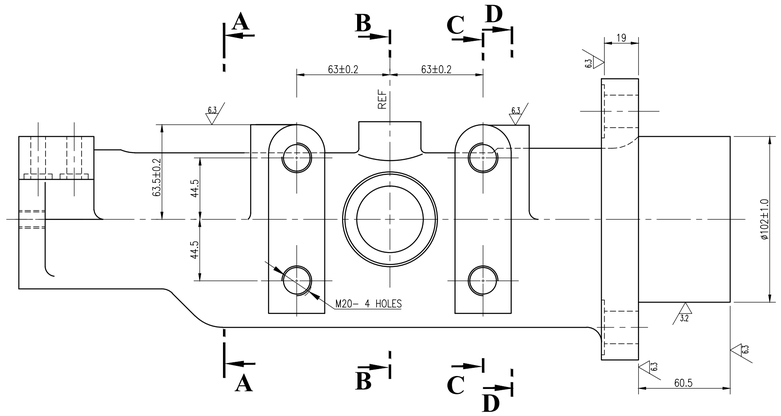

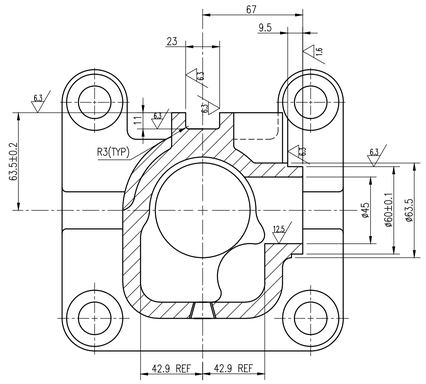

SECTION-BB

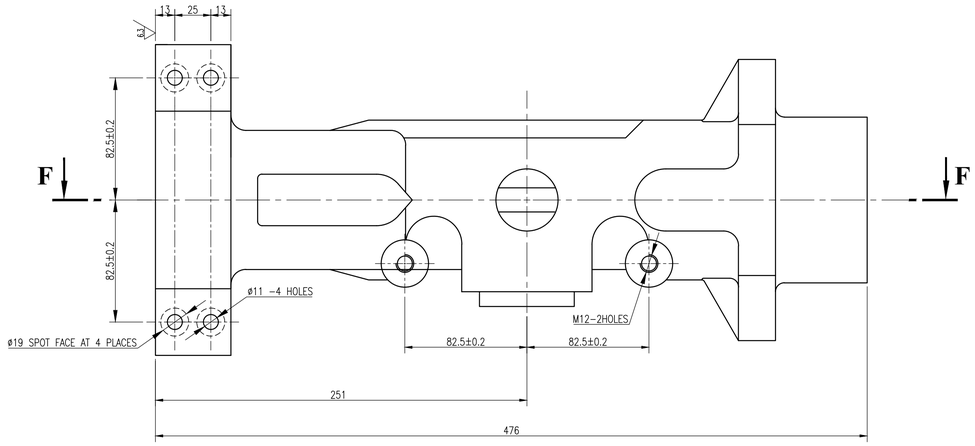

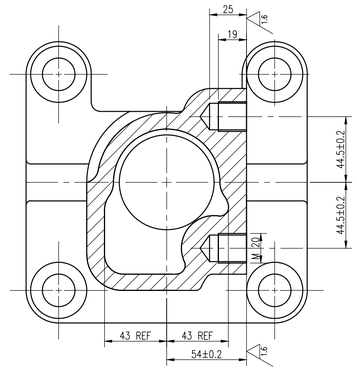

SECTION-CC

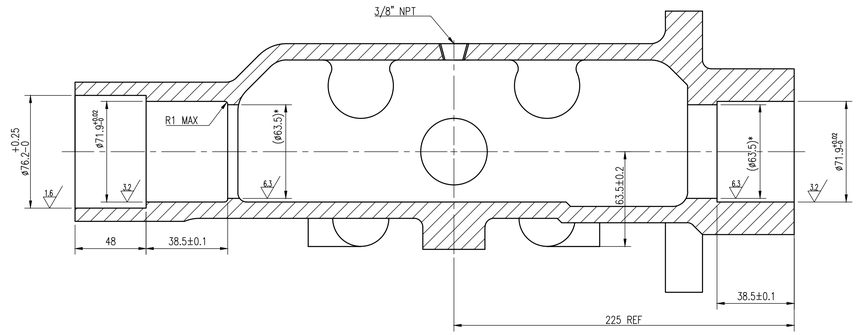

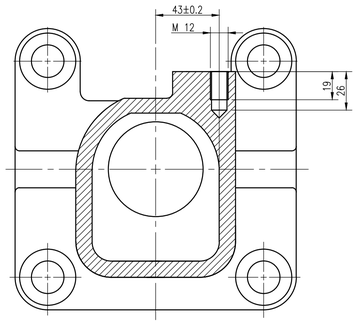

SECTION-DD

NOTES :-

1. FOR QUALITY REQUIREMENTS REFER LATEST APPLICABLE QUALITY PROCEDURE.
2. * TO BE MACHINED IF NECESSARY.

PART CODE : 842020139901

No OFF	DESCRIPTION	MATL CODE	MATL SPECN	HEAT TREATMENT	SCRAP SORT	NET WT (kg)	GROSS WT (kg)	DRAWING No	ITEM No
–	CASTING	920057850100	A216 WCB	–	–	–	27.0	1-20-201-00299	–

TYPE OF PRODUCT
OR NAME OF
CUSTOMER/PROJECT

BHARAT HEAVY ELECTRICALS LTD.,
UNIT: HIGH PRESSURE BOILER PLANT.
TIRUCHIRAPALLI-620014.
365-119/A 09.09.20

	NAME	SIGN	DATE	NO.OF VAR.
DRN	V.D.L.JOSEPH	V.D.LJ	17.02.25	–
CHD	J.SANKAR	J.S	17.02.25	
APPD	R.RAKESH	R.R	17.02.25	

DEPT SB
CODE 330
SCALE NTS
WEIGHT (KG). 25.0
REFERENCE INFORMATIONS 1-20-201-00162
NO. OF ITEMS –

TITLE WALL DESLAGGER BODY (MODIFIED)
CARD CODE U 01
DRAWING NO. 1-20-201-00300
REV 00

REV	DATE	ALTERED
		CHD & APPD

CAUTION: The information on this document is the property of BHARAT HEAVY ELECTRICALS LTD. and must not be used directly or indirectly in any way detrimental to the interest of the company.

Size A1