FIRST ANGLE PROJECTION

(ALL DIMENSIONS ARE IN mm)

DRG. NO. 0 180 40 1 3238 SH.01 OF 01

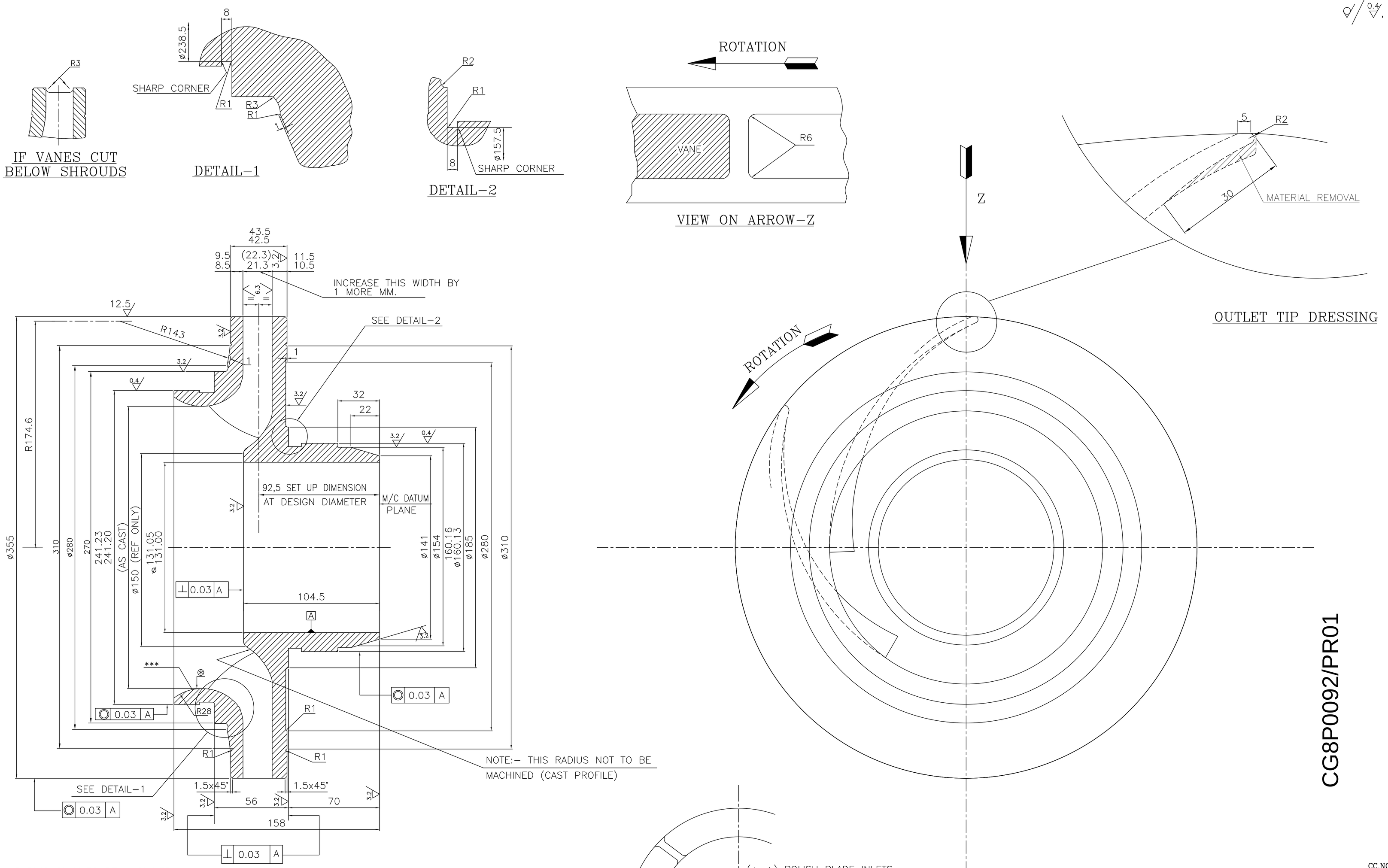

*** – RADIUS ONLY TO BE MACHINED TO "BLEND WITH AS CAST" EYE DIAMETER.

EYE DIAMETER MUST NOT BE MACHINED

CARE TO BE TAKEN TO ENSURE THAT BLADES ARE NOT DAMAGED THAT MACHINING THIS RADIUS.

NOTE TO M/C SHOP:–

1. REFER DRG.NO. 1180 40 2 3282 FOR PROOF M/C DETAILS.
2. REFER DRG.NO. 0 180 40 2 3239 FOR HYDRAULIC DETAILS.
3. REFER DRG.NO. 0 180 40 1 3237 FOR ASSLY & FINAL M/C.
4. LPI TO BE DONE ON ALL ACCESSIBLE AREAS AS PER AA0850131 AND ACCEPTANCE AS PER AA0850132, LEVEL–II.
5. TRANSFER HEAT NO / MELT NO IF MACHINED DURING M/C
   ® PLACE FOR HEAT NO/MELT NO

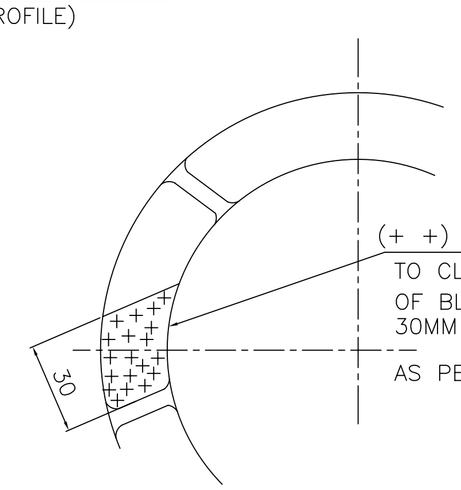

(+ +) POLISH BLADE INLETS TO CLASS DI, ON FACE OF BLADES OVER FIRST 30MM

AS PER CSD 1046 (FP70034)

CC.NO. 180 40031

ITEM NO.	DESCRIPTION	DRAWING NO.	VAR NO.	RAW MATERIAL SIZE OR CASTING DRG. NO. OR FORGING DRG. NO.	MATERIAL CODE	UNIT WT.	GROSS WT.
				CASTING M-180-0928	FP9219324059	20.00	22.0
					BS 1504-425-C11		1
					MATERIAL SPECN.	QUANTITY	

THE FOLLOWING CONDITIONS APPLY EXCEPT OTHERWISE STATED.

1. REF. TO HY0230261 FOR UNSPECIFIED TOLERANCES.
2. CHAMFER M/CD. SHARP EDGES 1.2 TO 1.0 AT 45°.
3. INTERNAL M/CD. CORNER RADII 1 TO 0.7
4. THE SURFACE ROUGHNESS WHERE–EVER NOT SHOWN SHALL BE TAKEN FROM THE SURFACE ROUGHNESS SHOWN OUT SIDE THE BACK SLASH GIVEN OR THE TOP MOST RIGHT CORNER OF THE DRG.

TYPE OF PRODUCT: FK4E36

NAME OF CUSTOMER/PROJECT

BHARAT HEAVY ELECTRICALS LIMITED, HYDERABAD

	NAME	SIGN.	DATE	NO.OF VAR.
DRN.	ACAD		22.06.84	
CHD.	T.S.R		22.06.84	NA
APPD.	J.G.C		22.06.84	

DEPT.	SCALE	WEIGHT (KG)	REF. TO ASSY DRG.	ITEM NO.	NO.OF ITEMS
PUMPS	1:1	20.00	01804013237	19/1	NA

CODE 410

TITLE: IMPELLER, 1st STAGE MACHINING

DRAWING NO. 0 180 40 1 3238 REV. 06

SHEET NO. 01 NO OF SHEETS 01

REV.	DATE	ALTERED	CHD./APPD.
06	06.06.03	OUTLET TIP DRESSING DETAIL REVISED. LPI STANDARDS REVISED FROM WPL TO CORP STANDARDS. DCA NO. FP1406, DT.07.06.03.	
05	29.03.89	DIM. 42.5/40.5 CHANGED TO 42.5/43.5. 'SHARP CORNER' ADDED AT DETAIL–1&2.	
04	27.11.86	DIM ø157.5 WAS ø159. DIM ø238.5 WAS ø240. DIM ø160.16/160.13 WAS ø160.12/160.09. DIM ø241.23/241.20 WAS ø241.13/241.10.	
03	22.7.85	DIM ø131.05/131.00 WAS ø128.	
02	17.1.85	PLACE FOR HEAT NO./MELT NO. ADDED.	
01	3.07.84	DETAIL–2 MODIFIED.	

THE INFORMATION ON THIS DOCUMENT IS THE PROPERTY OF BHARAT HEAVY ELECTRICALS LIMITED. IT MUST NOT BE USED DIRECTLY OR INDIRECTLY IN ANY WAY DETRIMENTAL TO THE INTEREST OF THE COMPANY

INVENTORY NO. 01803238 | SIGN. AND DATE | REF. DRG. NO. C–AO–104399 | COMP. FILE NAME FP01804013238–06

FIRST ANGLE PROJECTION

(ALL DIMENSIONS ARE IN mm)

DRG. NO. 0 180 40 1 3240 SH. 01 OF 01

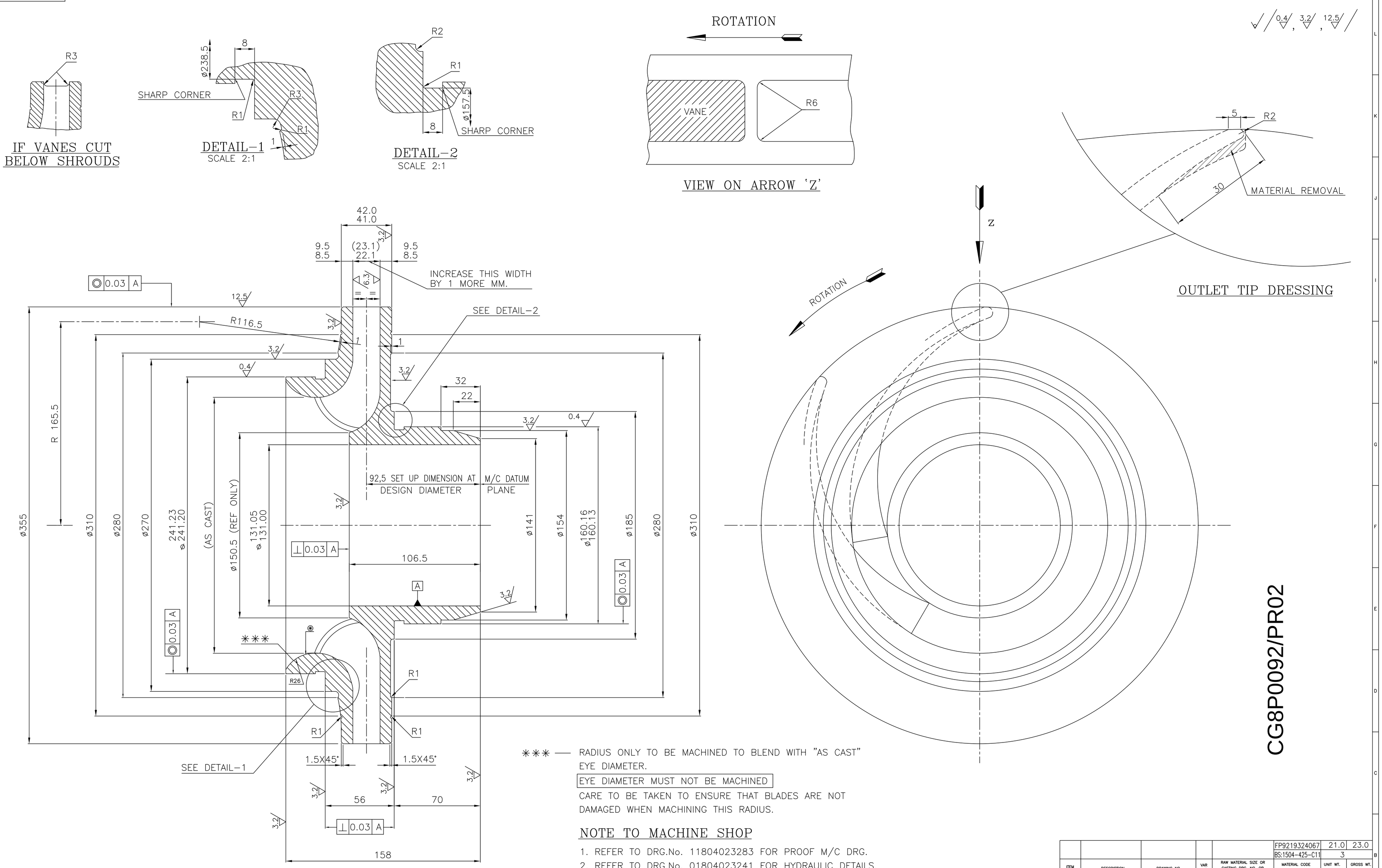

*** — RADIUS ONLY TO BE MACHINED TO BLEND WITH "AS CAST" EYE DIAMETER.

EYE DIAMETER MUST NOT BE MACHINED

CARE TO BE TAKEN TO ENSURE THAT BLADES ARE NOT DAMAGED WHEN MACHINING THIS RADIUS.

NOTE TO MACHINE SHOP

1. REFER TO DRG.No. 11804023283 FOR PROOF M/C DRG.
2. REFER TO DRG.No. 01804023241 FOR HYDRAULIC DETAILS.
3. LPI TO BE DONE ON ALL ACCESSIBLE AREAS AS PER AA0850131 AND ACCEPTANCE AS PER AA0850132, LEVEL–II.
4. TRANSFER HEAT No./MELT No. IF MACHINED DURING MACHINING.
5. ⊛ PLACE FOR HEAT No./MELT No.

ITEM NO.	DESCRIPTION	DRAWING NO.	VAR NO.	RAW MATERIAL SIZE OR CASTING DRG. NO. OR FORGING DRG. NO.	MATERIAL CODE	UNIT WT.	GROSS WT.
					FP9219324067	21.0	23.0
					BS:1504–425–C11	3	
					MATERIAL SPECN.	QUANTITY	

THE FOLLOWING CONDITIONS APPLY EXCEPT OTHERWISE STATED.

1. REF. TO HY0230261 FOR UNSPECIFIED TOLERANCES.
2. CHAMFER M/CD. SHARP EDGES 1.2 TO 1.0 AT 45°.
3. INTERNAL M/CD. CORNER RADII 1 TO 0.7
4. THE SURFACE ROUGHNESS WHERE–EVER NOT SHOWN SHALL BE TAKEN FROM THE SURFACE ROUGHNESS SHOWN OUT SIDE THE BACK SLASH GIVEN OR THE TOP MOST RIGHT CORNER OF THE DRG.

TYPE OF PRODUCT: FK4E36

NAME OF CUSTOMER/PROJECT

BHARAT HEAVY ELECTRICALS LIMITED, HYDERABAD

	NAME	SIGN.	DATE	NO.OF VAR.
DRN.	acad		22.06.84	
CHD.	TSR		22.06.84	NA
APPD.	JGC		22.06.84	

DEPT.	SCALE	WEIGHT (KG)	REF. TO ASSY DRG.	ITEM NO.	NO.OF ITEMS
PUMPS	1:1	21.00	NA	NA	NA
CODE 410					

TITLE: IMPELLER INTER STAGE(2ND,3RD AND 4TH) MACHINING

DRAWING NO. 0 180 40 1 3240 REV. 06

SHEET NO. 01 NO OF SHEETS 01

REV.	DATE	ALTERED CHD./APPD.	ZONE
06	06.06.03	OUTLET TIP DRESSING DETAIL REVISED. LPI STANDARDS REVISED FROM WPL TO CORP STANDARDS. DCA NO. FP1406, DT.07.06.03.	
05	29.03.89	DIM 41/39 CHANGED TO 41/42. 'SHARP CORNER' ADDED AT DETAIL–1&2.	
04	27.11.86	DIM ø157.5 WAS ø159. DIM ø238.5 WAS ø240. DIM ø160.16/160.13 WAS ø160.12/160.09. DIM ø241.23/241.20 WAS ø241.13/241.10.	
03	22.7.85	DIM ø131.05/131.00 WAS ø128.	
02	17.1.85	PLACE FOR HEAT NO./MELT NO. ADDED.	
01	3.07.84	DETAIL–2 MODIFIED.	

THE INFORMATION ON THIS DOCUMENT IS THE PROPERTY OF BHARAT HEAVY ELECTRICALS LIMITED. IT MUST NOT BE USED DIRECTLY OR INDIRECTLY IN ANY WAY DETRIMENTAL TO THE INTEREST OF THE COMPANY

INVENTORY NO. 01803240 | SIGN. AND DATE | REF. DRG. NO. C–A0–104400 | COMP. FILE NAME FP01804013240–06