DRAWING NO. 0-20-201-00004

ALL DIMENSIONS ARE IN MILLIMETRES. FOR TOLERANCES OF UNTOLERANCED DIMENSIONS DURING MANUFACTURE REFER RELEVANT QCP/QP

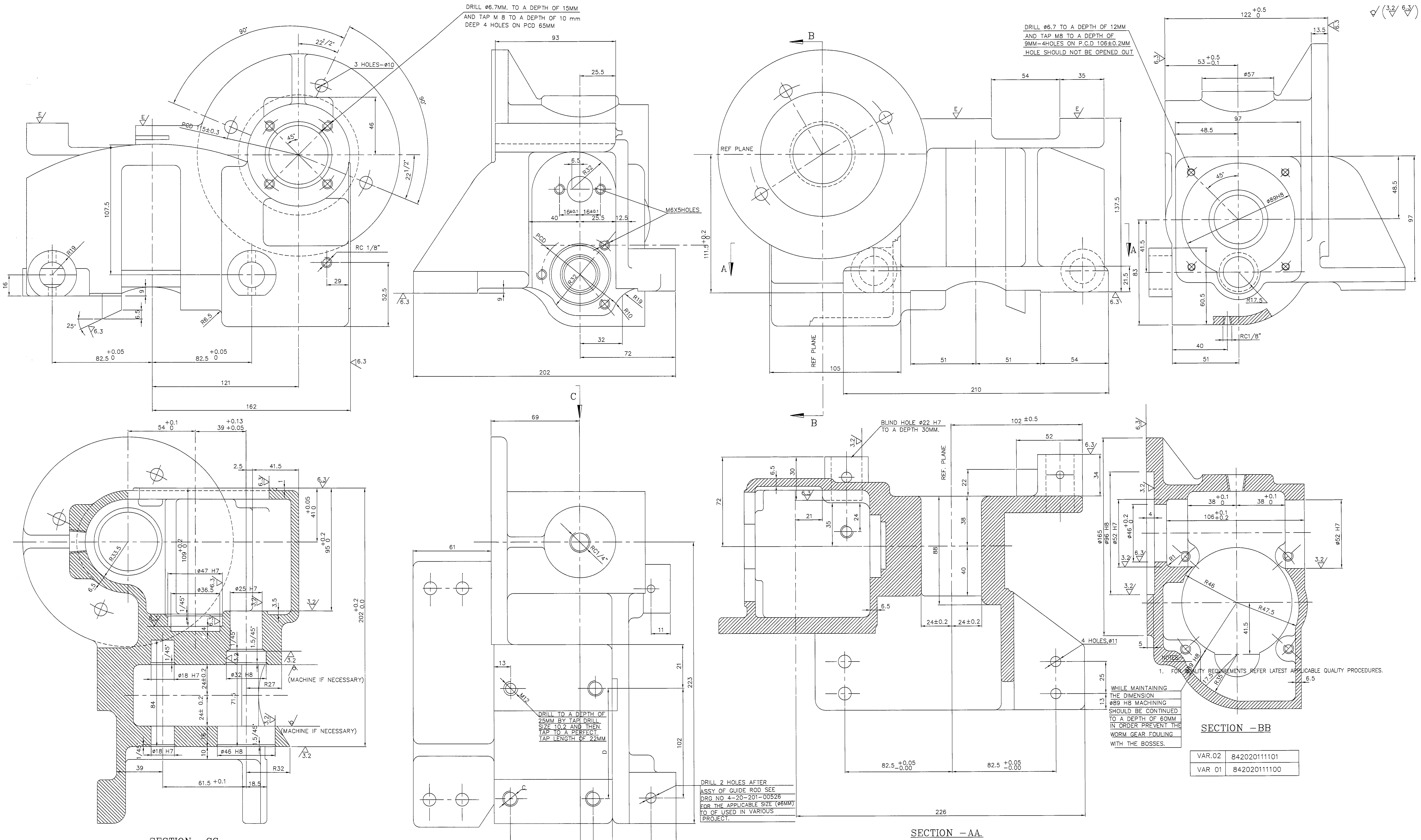

VAR.02	842020111101
VAR 01	842020111100

	TOLERANCE VALUES	
01	ø18 H7	+0.02 -0.0
02	ø22 H7	+0.02 -0.0
03	ø25 H7	+0.02 -0.0
04	ø32 H8	+0.04 -0.0
05	ø46 H8	+0.04 -0.0
06	ø47 H7	+0.03 -0.0
07	ø52 H7	+0.03 -0.0
08	ø89 H8	+0.05 -0.0
09	ø96 H8	+0.05 -0.0

NOTE

1. FOR QUALITY REQUIREMENTS REFER LATEST APPLICABLE QUALITY PROCEDURE.
2. DIM ABCD & E ARE APPLICABLE FOR VAR NO.2 ONLY (84 20 201 111 01). (A=15; B=65, C=M12 3HOLES D=102, E=12.5

REV	DATE	ALTERED
17	11.06.01	CHD & APPD
	DRG.UPDATED AND REDRAWN.	

DCN:SB:1298

CAUTION: The information on this document is the property of BHARAT HEAVY ELECTRICALS LTD. It must not be used directly or indirectly in any way detrimental to the interest of the company.

No OFF	DESCRIPTION	MATL CODE	MATL SPECN	HEAT TREATMENT	SCRAP SORT	NET WT (Kg)	GROSS WT (Kg)	DRAWING No	ITEM No
	CASTING	92-008-788	ALU/LM5			7.00		1-20-201-00021	

TYPE OF PRODUCT OR NAME OF CUSTOMER/PROJECT

BHARAT HEAVY ELECTRICALS LTD. UNIT: HIGH PRESSURE BOILER PLANT, TIRUCHIRAPALLI-620014.

	NAME	SIGN	DATE
DRN	V.ARUMUGAM		
CHD	K.SRIDHARAN		
APPD	S.NATARAJAN		

365-118

DEPT VL SB | SCALE NTS | WEIGHT (KG). 7.00 | REFERENCE INFORMATIONS 0-20-201-00002 W 130300

CODE 330

TITLE RACK GEAR HOUSING | CARD CODE U 01 | DRAWING NO. 0-20-201-00004 | REV 17

Size A0

DRAWING NO. 0-20-201-00048

ALL DIMENSIONS ARE IN MILLIMETRES. FOR TOLERANCES OF UNTOLERANCED DIMENSIONS DURING MANUFACTURE REFER RELEVANT QCP/QP

~(∀ ∀)

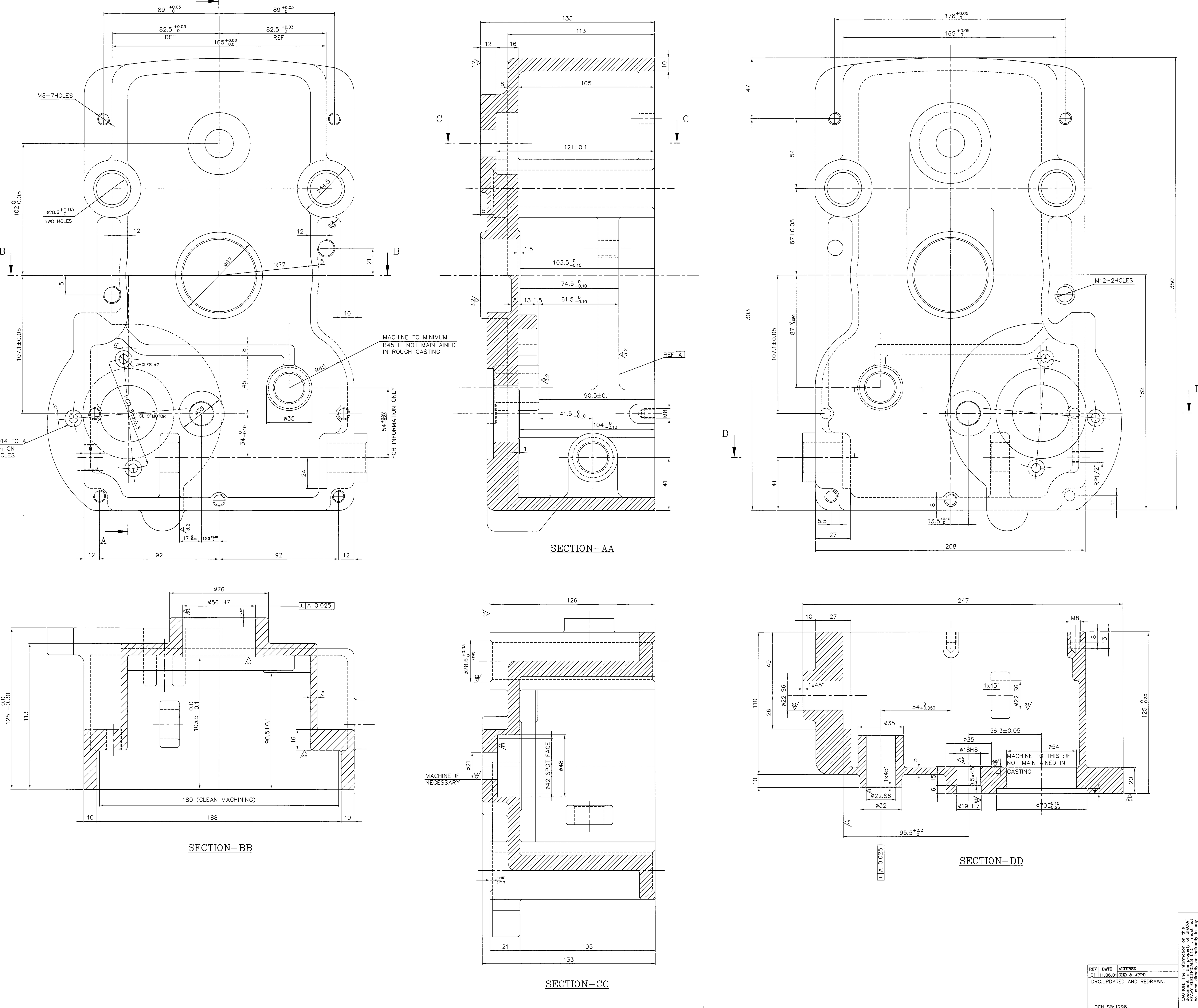

TOLERANCE VALUES			
18_{H8}	19_{H7}	22_{S6}	56_{H7}
$18^{+0.03}_{0}$	$19^{+0.02}_{0}$	$22^{-0.03}_{-0.05}$	$56^{+0.30}_{0}$

NOTE:–

1. FOR QUALITY REQUIREMENTS REFER LATEST APPLICABLE QUALITY PROCEDURES.
DRAWING REVISED FROM DRG.NO. 0-20-201-00003

PART CODE :842020113200

REV	DATE	ALTERED
01	11.06.01	CHD & APPD
DRG.UPDATED AND REDRAWN.		

DCN: SB:1298

CAUTION: The information on this document is the property of BHARAT HEAVY ELECTRICALS LTD. It must not be used directly or indirectly in any way detrimental to the interest of the company.

CASTING | 92-005-789 | CAST AL-LM9 | 6.470 | CASTING DRAWING 0-20-201-00020

TYPE OF PRODUCT OR NAME OF CUSTOMER/PROJECT

BHARAT HEAVY ELECTRICALS LTD.
UNIT: HIGH PRESSURE BOILER PLANT, TIRUCHIRAPALLI–620014.

365-118

	NAME	SIGN	DATE
DRN	V.ARUMUGAM		
CHD	K.SRIDHARAN		
APPD	S.NATARAJAN		

DEPT VL SB | CODE 330 | SCALE NTS | WEIGHT (KG). 6.470 | REFERENCE INFORMATIONS 1-20-201-00022

TITLE: GEAR HOUSING | CARD CODE U 01 | DRAWING NO. 0-20-201-00048 | REV 07

Size A0

DRAWING NO. 2-20-201-00059

ALL DIMENSIONS ARE IN MILLIMETRES. FOR TOLERANCES OF UNTOLERANCED DIMENSIONS DURING MANUFACTURE REFER RELEVANT QCP / QP

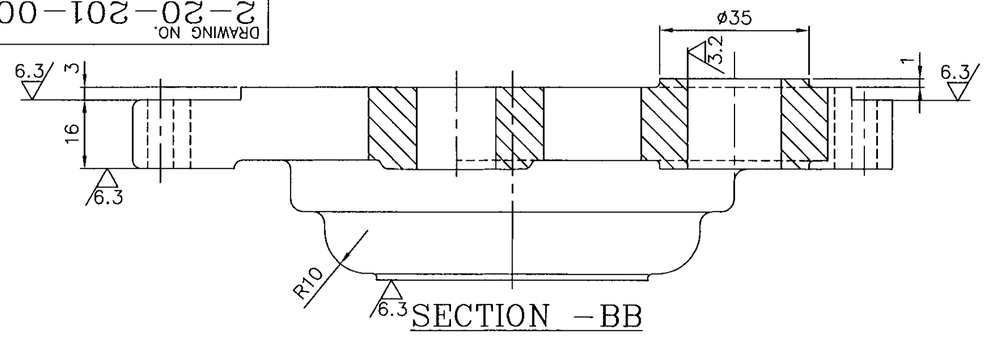

SECTION -BB

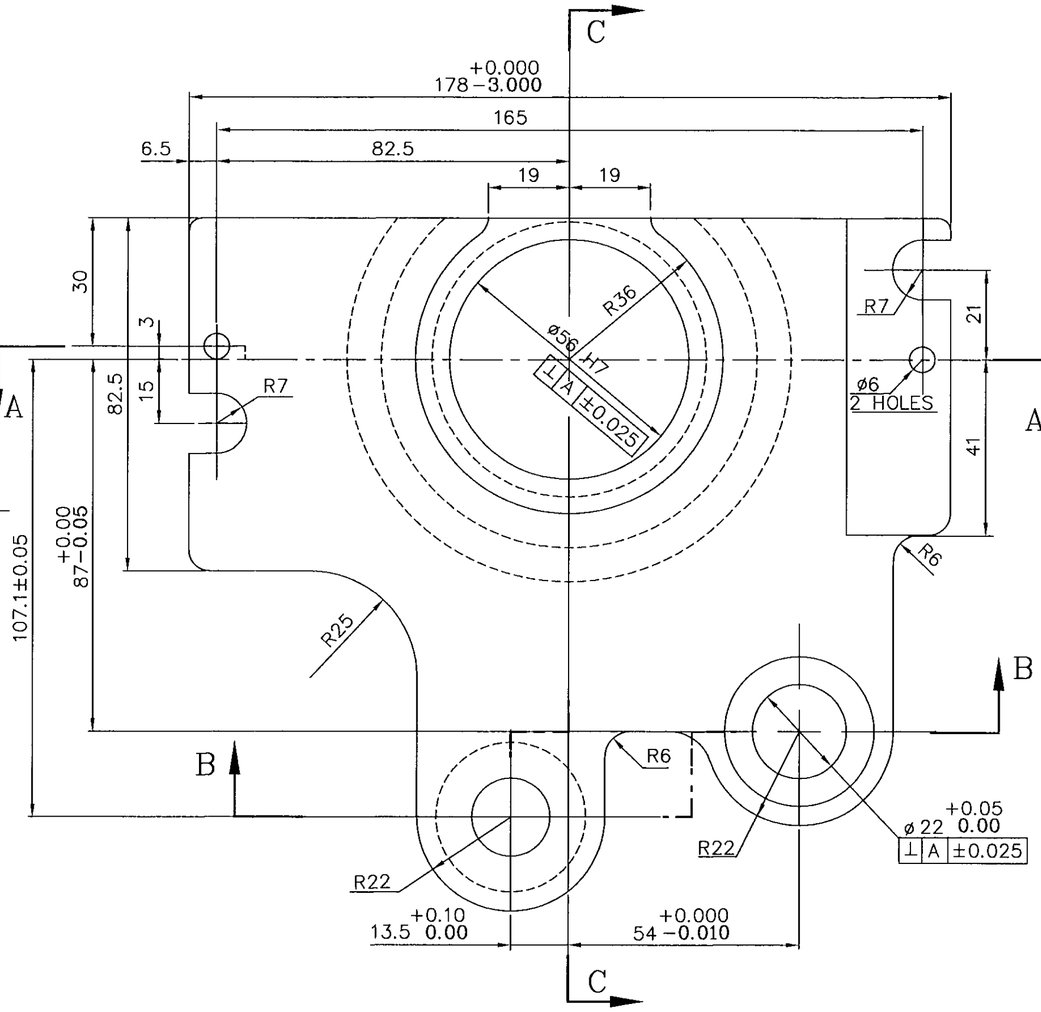

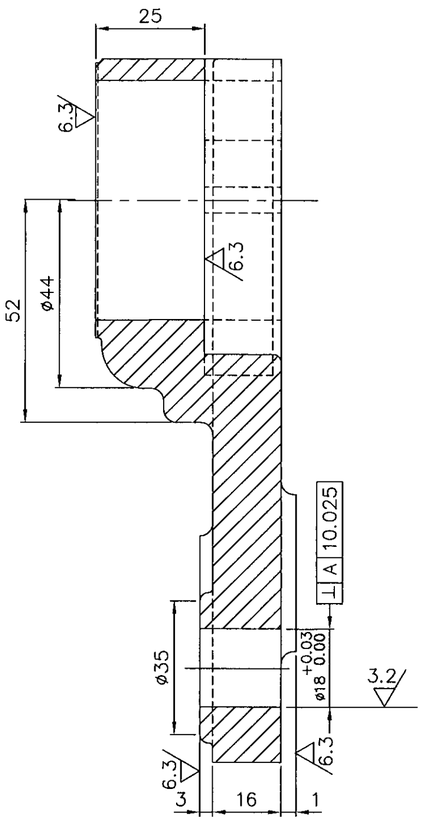

SECTION -CC

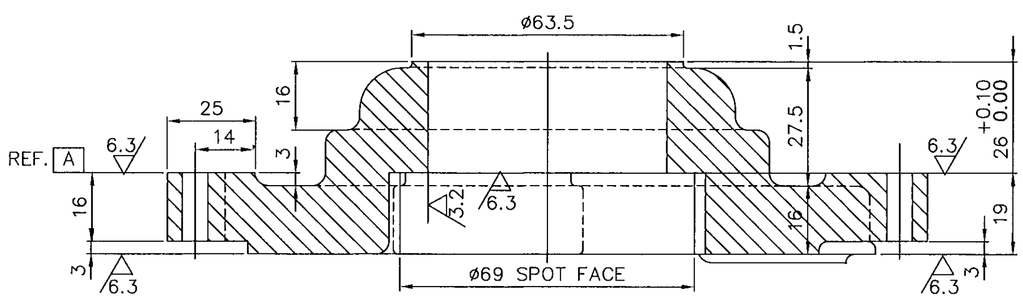

SECTION -AA

NOTES:

1. CASTING RADII SHOULD BE 3MM WHEREVER NOT SPECIFIED.
2. REFER DRG.NO: 2-20-201-00117 FOR CASTING.
3. FOR QUALITY REQUIREMENTS REFER LATEST APPLICABLE QUALITY PROCEDURES.

PART CODE : 842020113400

No OFF	DESCRIPTION	MATL CODE	MATL SPECN	HEAT TREATMENT	SCRAP SORT	NET WT (kg)	GROSS WT (kg)	DRAWING No	ITEM No
	BEARING FRAME	92-026-042	ALUMINIUM LM9			1.030			1

TYPE OF PRODUCT
OR NAME OF
CUSTOMER/PROJECT

BHARAT HEAVY ELECTRICALS LTD.,
UNIT: HIGH PRESSURE BOILER PLANT.
TIRUCHIRAPALLI -620014.
365-120

	NAME	SIGN	DATE	NO.OF VAR.
DRN	V. Arumugham.			
CHD	K. Sridharan.			
APPD	S. Natarajan.			

DEPT	SCALE	WEIGHT (KG).	REFERENCE INFORMATIONS	NO. OF ITEMS
SB	NTS	1.030	12759/13	
CODE 330				

TITLE	CARD CODE	DRAWING NO.	REV
BEARING FRAME	U 01	2-20-201-00059	07

Size A2

REV	DATE	ALTERED
07	11.06.01	CHD & APPD
ZONE	DRG.UPDATED AND REDRAWN.	

DCN: SB: 1298

CAUTION: The information on this document is the property of BHARAT HEAVY ELECTRICALS LTD. It must not be used directly or indirectly in any way detrimental to the interest of the company.

DRAWING NO. 2-20-201-00060

ALL DIMENSIONS ARE IN MILLIMETRES. FOR TOLERANCES OF UNTOLERANCED DIMENSIONS DURING MANUFACTURE REFER RELEVANT QCP / QP

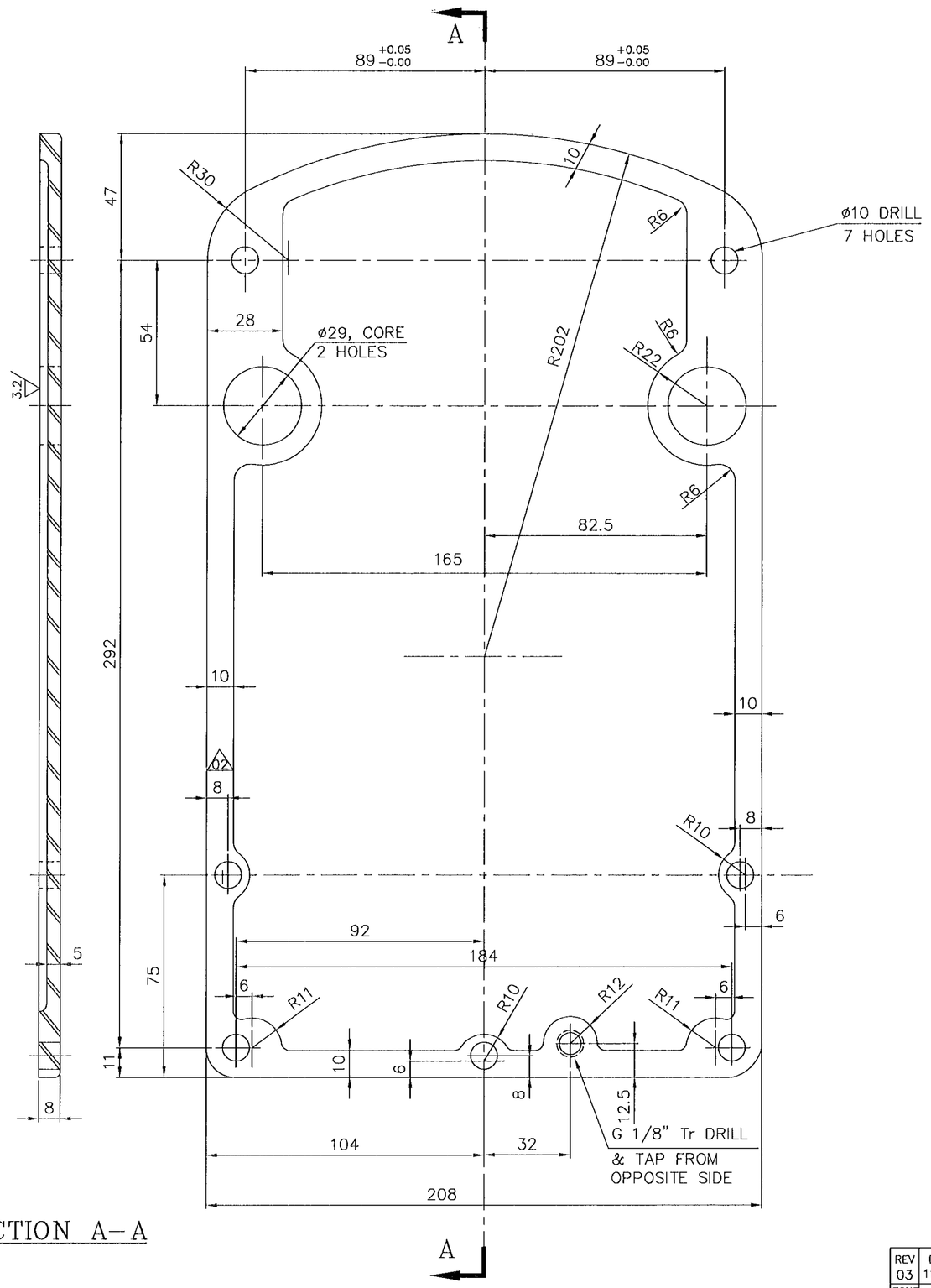

SECTION A–A

NOTE: –

1. FOR QUALITY REQUIREMENTS REFER LATEST APPLICABLE QUALITY PROCEDURES. M/CING ALLOWANCES TO BE MAX. OF 5MM WHEREVER NECESSARY.

PART CODE : 842020113300

No OFF	DESCRIPTION	MATL CODE	MATL SPECN	HEAT TREATMENT	SCRAP SORT	NET WT (kg)	GROSS WT (kg)	DRAWING No	ITEM No
	CASTING	92/005/792	ALUMINIUM LM9			1.000			

TYPE OF PRODUCT
OR NAME OF
CUSTOMER/PROJECT

BHARAT HEAVY ELECTRICALS LTD.,
UNIT: HIGH PRESSURE BOILER PLANT.
TIRUCHIRAPALLI -620014.
365-120

	NAME	SIGN	DATE
DRN	V. Arumugham		
CHD	K. Sridharan		
APPD	S. Natarajan		

NO. OF VAR.

DEPT SB
CODE 330
SCALE NTS
WEIGHT (KG).
REFERENCE INFORMATIONS
NO. OF ITEMS

TITLE: GEAR BOX COVER
CARD CODE: U 01
DRAWING NO. 2-20-201-00060
REV 03

REV	DATE	ALTERED
03	11.06.01	CHD & APPD

ZONE: DRG.UPDATED AND REDRAWN.

DCN: SB:1298

CAUTION: The information on this document is the property of BHARAT HEAVY ELECTRICALS LTD. It must not be used directly or indirectly in any way detrimental to the interest of the company.

Size A2

DRAWING NO. 2-20-201-00061

ALL DIMENSIONS ARE IN MILLIMETRES. FOR TOLERANCES OF UNTOLERANCED DIMENSIONS DURING MANUFACTURE REFER RELEVANT QCP / QP

~ 1.6 3.2

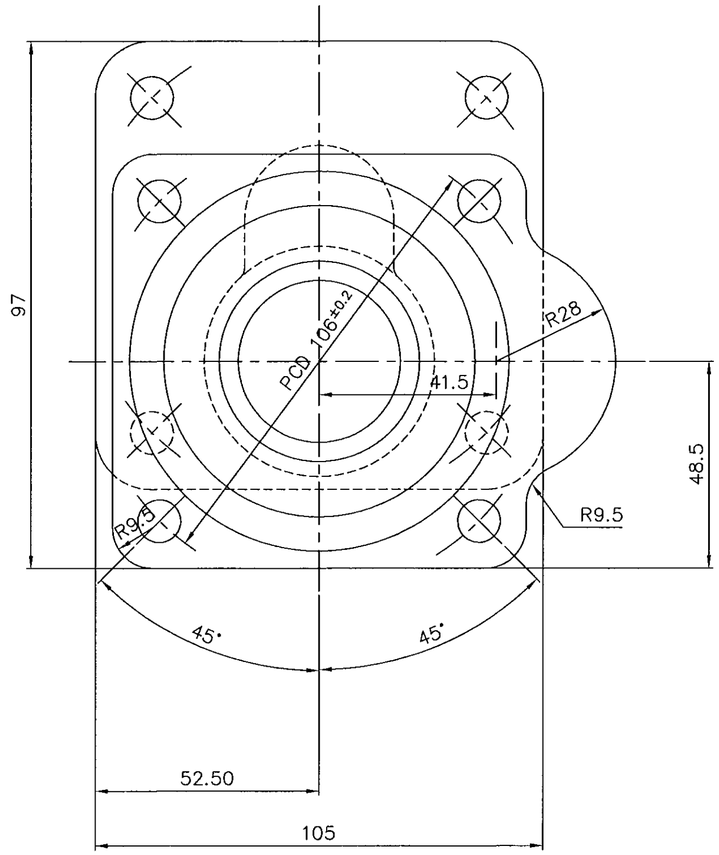

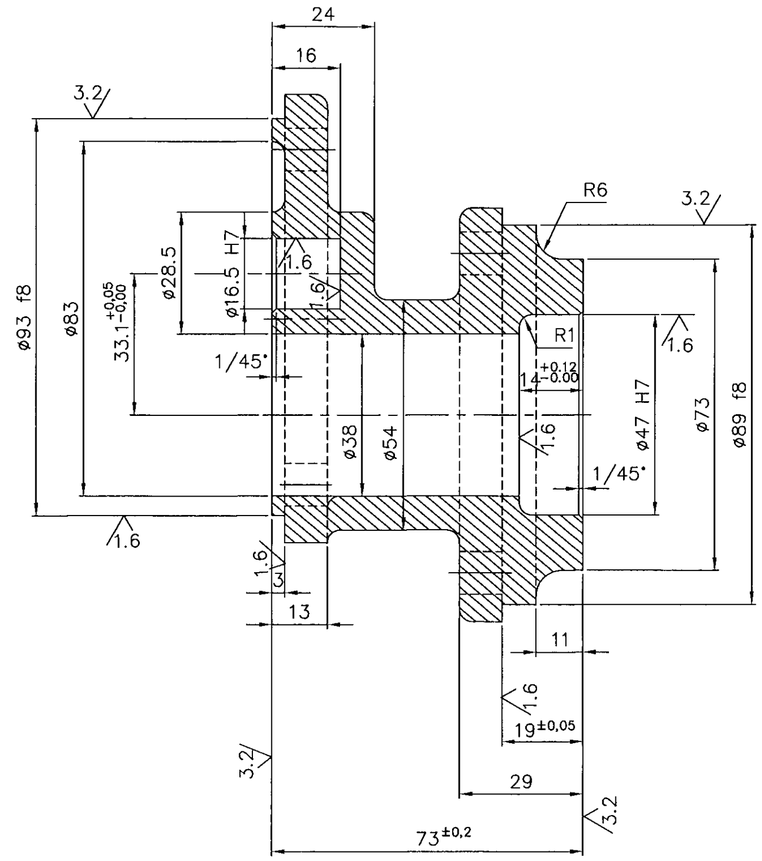

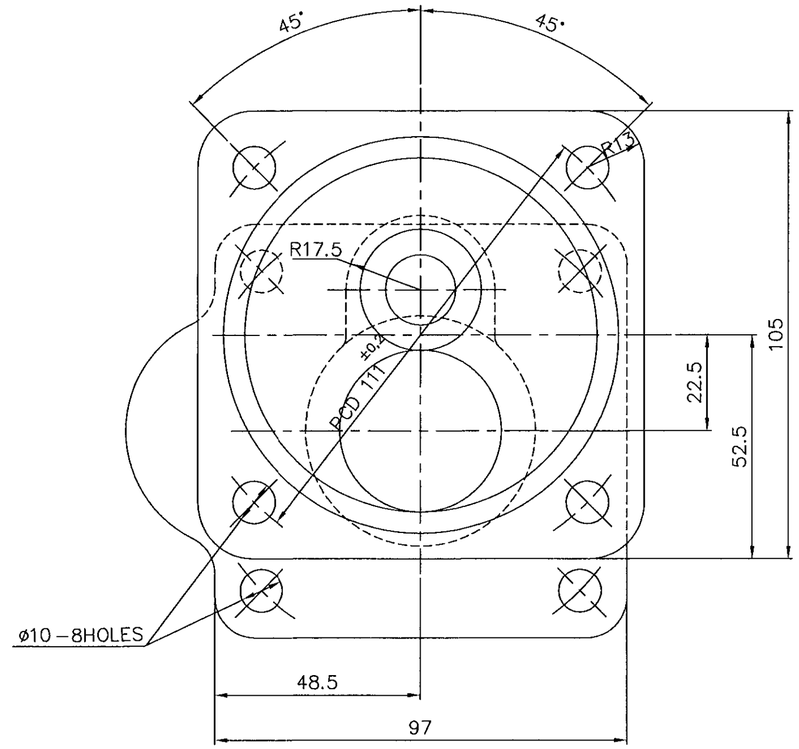

PART CODE : 842020111200

No OFF	DESCRIPTION	MATL CODE	MATL SPECN	HEAT TREATMENT	SCRAP SORT	NET WT (kg)	GROSS WT (kg)	DRAWING No	ITEM No
	CASTING	92/005/791	ALUMINIUM LM9				1.250		

NOTES:–

1. FOR QUALITY REQUIREMENTS REFER LATEST APPLICABLE QUALITY PROCEDURES.
2. USE R4 WHEREVER NOT SPECIFIED TOLERANCE ON ANGLE ±2 ½°
   M/CING ALLOWANCE TO BE MAX OF 5mm WHEREVER NECESSARY.

REV	DATE	ALTERED
03	11.06.01	CHD & APPD
ZONE	DRG.UPDATED AND REDRAWN.	
	DCN: SB: 1298	

CAUTION: The information on this document is the property of BHARAT HEAVY ELECTRICALS LTD. It must not be used directly or indirectly in any way detrimental to the interest of the company.

TYPE OF PRODUCT
OR NAME OF
CUSTOMER/PROJECT

BHARAT HEAVY ELECTRICALS LTD.,
UNIT: HIGH PRESSURE BOILER PLANT.
TIRUCHIRAPALLI -620014.
365-120

	NAME	SIGN	DATE	NO.OF VAR.
DRN	V. Arumugham.			
CHD	K. Sridharan.			
APPD	S. Nalarajan.			

DEPT	SCALE	WEIGHT (KG).	REFERENCE INFORMATIONS	NO. OF ITEMS
SB	NTS	~1,05	L 60378	
CODE 330				

TITLE	CARD CODE	DRAWING NO.	REV
SWITCH MOUNT CONNECTOR	U 01	2-20-201-00061	03

Size A2

DRAWING NO. 2-20-201-00357

ALL DIMENSIONS ARE IN MILLIMETRES. FOR TOLERANCES OF UNTOLERANCED DIMENSIONS DURING MANUFACTURE REFER RELEVANT QCP / QP

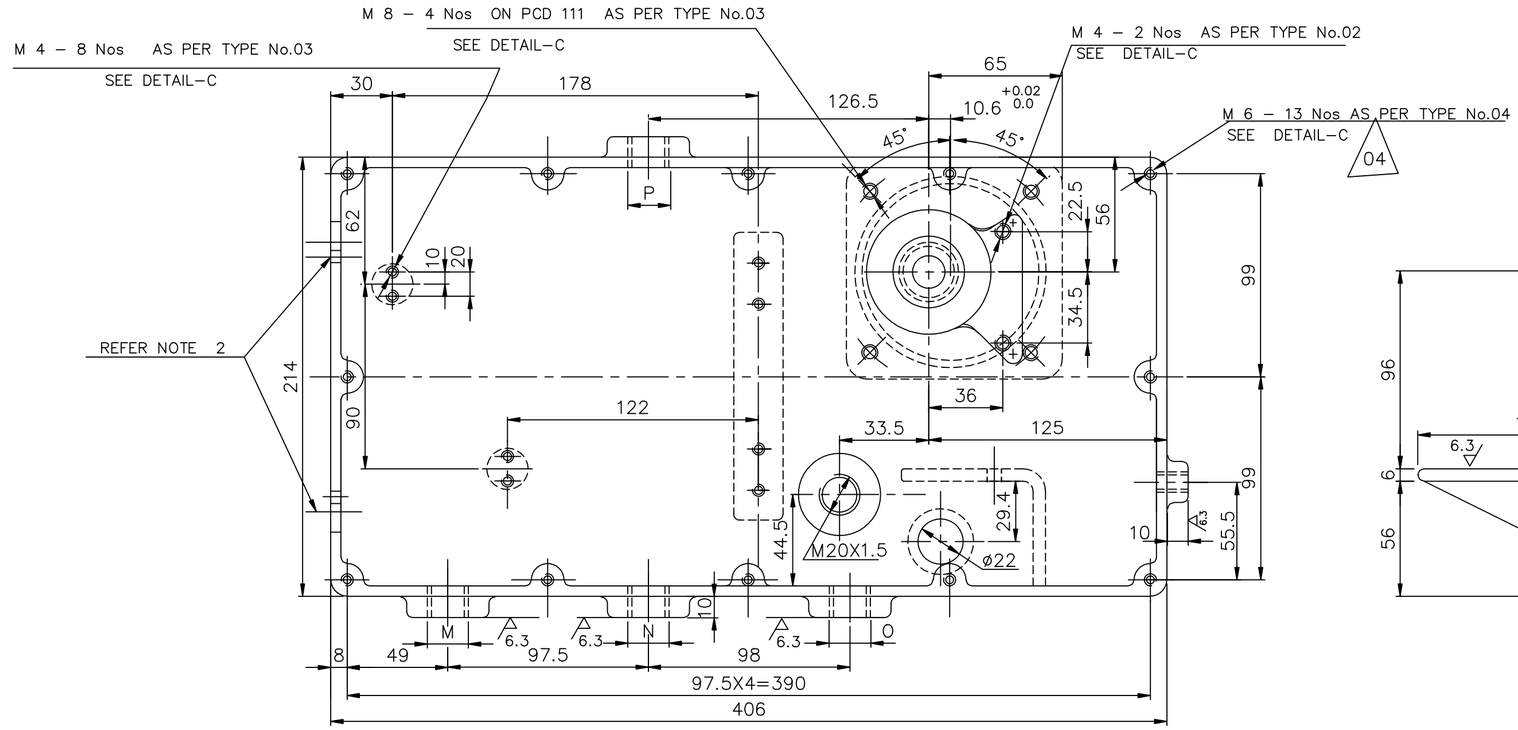

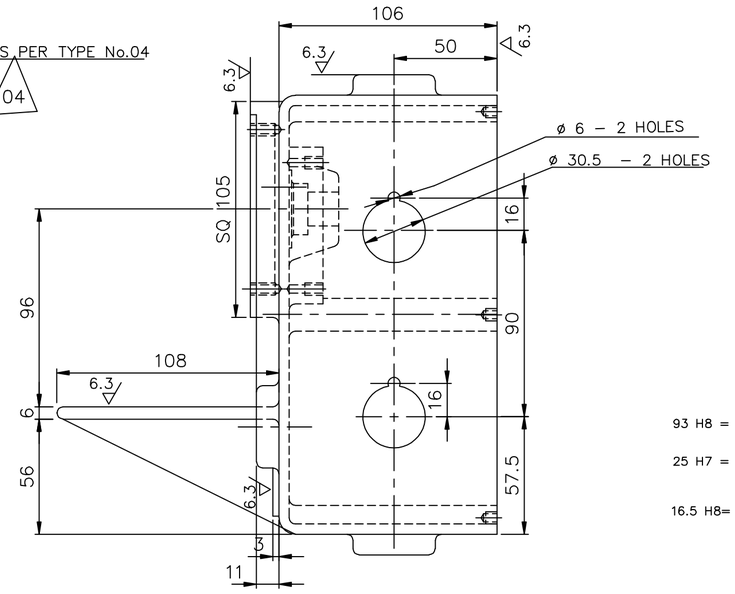

93 H8 = 93 +0.054 0.0

25 H7 = 25 +0.021 0.0

16.5 H8= 16.5 +0.027 0.0

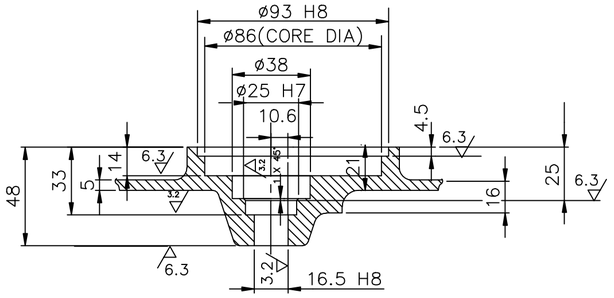

SECTION AA

DIMENSIONS FOR DETAIL–C				
TYPE NO.	DIMENSION A	DIMENSION B	DIMENSION C	NO.OF HOLES
01	M8	17.5	13	4
02	M4	12.5	10	2
03	M4	12	10	8
04	M6	14	12	13

04

	842020139700	842020139701
M	M 33X2	M 33X2
N	M 33X2	–
O	M 33X2	–
P	–	M 33X2

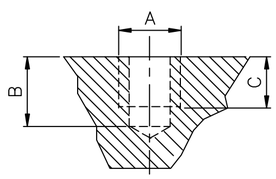

DETAIL C

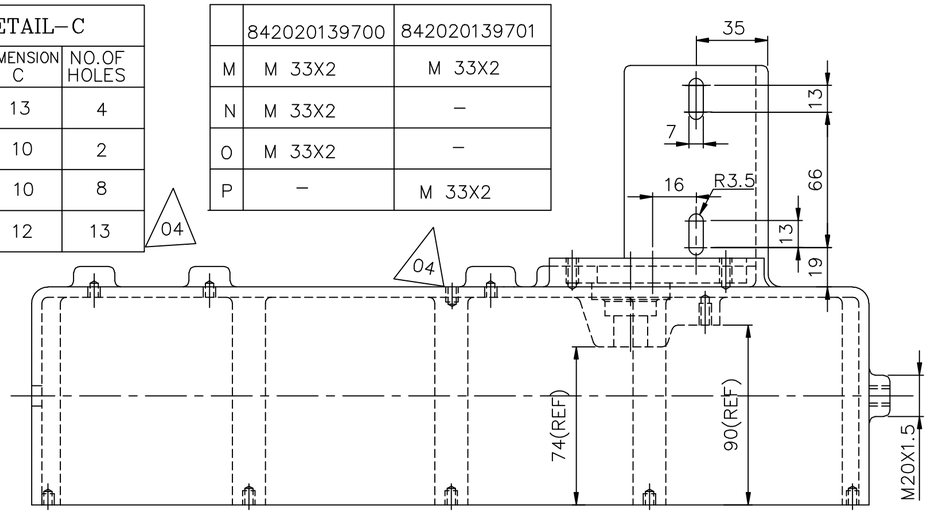

PART CODE : 842020139701

842020139700

No OFF	DESCRIPTION	MATL CODE	MATL SPECN	HEAT TREATMENT	SCRAP SORT	NET WT (kg)	GROSS WT (kg)	DRAWING No	ITEM No
	CASTING	16–024–016	ALUMINIUM LM9WP			4.760		2–20–201–00142	1

NOTES:

01. FOR CASTING DRAWING REFER DRG.NO: 2–20–201–00142, AFTER FINAL MACHINING SHARP CORNERS ARE TO BE ROUNDED OFF
02. SPOT FACE ø50 AT THESE LOCATIONS TO MAINTAIN 5MM IF THICKNESS IS MORE THAN 5MM.
03. FOR QUALITY REQUIREMENTS REFER APPLICABLE LATEST QUALITY PROCEDURES. REFER TABLE FOR M,N, O&P VALDES.

REV	DATE	ALTERED
04	24.08.09	CHD & APPD

ZONE: M6 HOLES IN THE REGION B–5 INCREASED FROM 12 TO 13 Nos.

DCN: 800909/5009626

CAUTION: The information on this document is the property of BHARAT HEAVY ELECTRICALS LTD. It must not be used directly or indirectly in any way detrimental to the interest of the company.

TYPE OF PRODUCT
OR NAME OF
CUSTOMER/PROJECT

BHARAT HEAVY ELECTRICALS LTD.,
UNIT: HIGH PRESSURE BOILER PLANT.
TIRUCHIRAPALLI -620014.
365–120

	NAME	SIGN	DATE	NO.OF VAR.
DRN	V.Arumugham.			
CHD	K.Sridharan.			
APPD	S.Nalarajan.			

DEPT	SB	SCALE	WEIGHT (KG).	REFERENCE INFORMATIONS	NO. OF ITEMS
CODE	330	NTS	4.760	E–129922 2–20–201–00289/04	

TITLE	CARD CODE	DRAWING NO.	REV
LIMIT SWITCH MOUNT	U 01	2–20–201–00357	04

Size A2

ALL DIMENSIONS ARE IN MILLIMETRES.

FOR TOLERANCES OF UNTOLERANCED DIMENSIONS DURING MANUFACTURE REFER RELEVANT QCP/QP

REV	DATE	ALTERED
04	11.06.01	CHD & APPD

DRG.UPDATED AND REDRAWN.

DCN: SB: 1298

CAUTION: The information on this document is the property of BHARAT HEAVY ELECTRICALS LTD. It must not be used directly or indirectly in any way detrimental to the interest of the company.

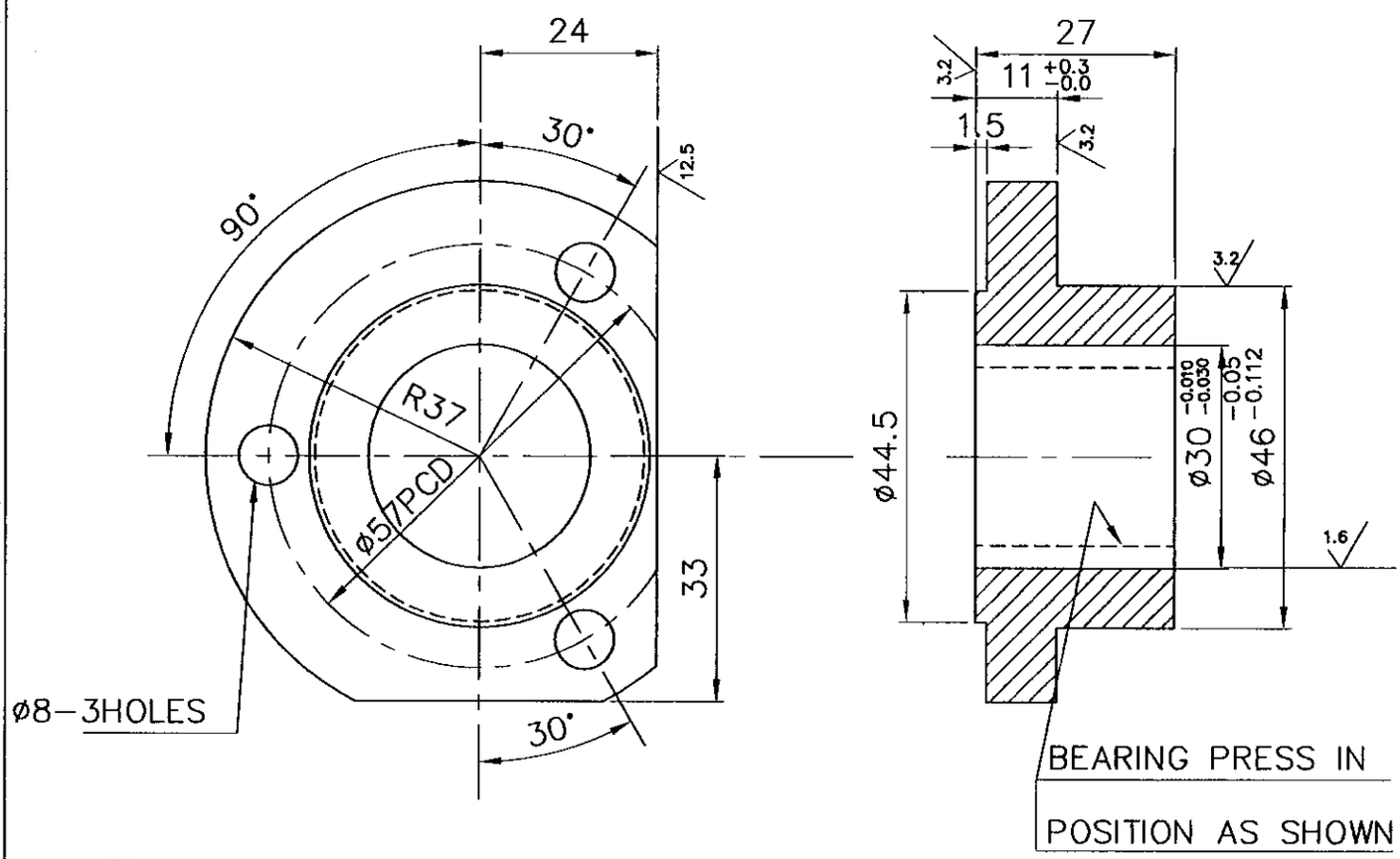

NOTES: -

1. FOR QUALITY REQUIREMENTS REFER APPLICABLE LATEST QUALITY PROCEDURE.

FOR CASTING DRAWING REFER NO 4-20-201-00736

PART CODE : 842020112600

NO OFF	DESCRIPTION	MATL CODE	MATL SPECN	HEAT TREATMENT	SCRAP SORT	NET WT (kg)	GROSS WT (kg)	DRAWING No	ITEM No
02	D80X27	16/006/003	ALU. COMML			16			
01	CASTING	92/005/790	AL.LM9			16			01

BHARAT HEAVY ELECTRICALS LTD.,
UNIT: HIGH PRESSURE BOILER PLANT.
TIRUCHIRAPALLI 620014.
365-122

	NAME	SIGN	DATE
DRN	V.ARUMUGAM		
CHD	K.SRIDHARAN		
APPD	S.NATARAJAN		

NO.OF VAR

DEPT	CODE	SCALE	WEIGHT (KG).	REFERENCE INFORMATIONS	NO. OF ITEMS
SB	330	NTS	0.16		

TITLE	CARD CODE	DRAWING NO.	REV
BEARING CAP	U 01	4-20-201-00200	04

Size A4