1 X 800 MW TSGENCO KOTHAGUDEM THERMAL POWER STATION PROJECT

Document Name: CONTROL VALVE DESIGN PARAMETERS

Document No.: PE-TS-410-145-I104, REV-002

Customer Letter Ref No.: DCPL comments rcd vide letter no. 13A06/DCH-4/0220 dated: 14.05.2015

Sl. No.	Customer / DCPL Comments on Rev-00	BHEL Reply (24.03.2015) with Rev-01	Customer / DCPL Comments on Rev-01 (09.04.2015)	BHEL Reply (10.04.2015) in Meeting at Hyderabad	BHEL Reply (21.04.2015) with Rev-02	Customer / DCPL Comments on Rev-02 (14.05.2015)	BHEL Reply (28.05.2015) with Rev-03
1	Leakage class for Control Valves Tag no. ASV-8, CRHV-6, CDV-22/25, DMV-2 & DMV-5 given as Class IV type but the same was not acceptable and Class V shall be given as per the resolution sl. no. 18 of Lot1 C&I-BHEL-PEM deviation to the specification, Class V shall be given.	Noted & incorporated. Please refer individual data sheet.	Noted	Noted & Closed	Point Closed	Point Closed	Point Closed
2	Solenoid Valve shall be provided for the Control Valves ASV-8, CRHV-6, CDV-22/25, CDV-40, CDV-46, CDV-72, DMV-2, DMV-5, FDV-8 & DRV-52.	Please appreciated that we have already provided solenoid valves (SOV) for following: 1) On/off type valves and 2) Control vales used in/for drain services SOVs for refered services are not required.	Noted (TSGENCO may kindly advise)	TSGENCO informed that BHEL to mention SOVs for the given applications. BHEL agreed. The same shall be reflected in the revised document.	In line with discussion on 10.04.2015, SOV for all the control valve are provided. Same is indicated under Accessories in the data sheet. Please refer individual control valve data sheet.	Noted	Point Closed
3	Booster relays shall be provided for the Control Valves ASV-8, CRHV-6, CDV-22/25 & FDV-8.	Booster relays, as per CV vendor practise shall be provided. Please refer point no. 24 at sheet no. 2.	Noted (TSGENCO may kindly advise)	BHEL confirmed to provide booster relays as per requirement.	Point Closed	Point Closed	Point Closed
DCPL Ref No.:	Email Dated 06.03.2015						
1	The actuator shall be designed for 150% thurst required for the valve (at shut-off pressure) at an air line supply pressure of 5.5 Kg/Sq.cm.	Noted & incorporated. Please refer point no. 1 at sheet no. 2.	Noted	Noted & Closed	Point Closed	Point Closed	Point Closed
2	Integral tubing shall be SS as per specification.	Noted & incorporated. Please refer point no. 8 at sheet no. 2.	Noted. However please clarify why fitting materials have been retained as brass. Same should also be SS.	BHEL noted & confirmed . Same shall be reflected in the revised document. TSGENCO requested BHEL to follow SPEC S-VII/SS-B:6 CL 2.15.02. The same shall be reflected in the note sheet of the document.	Noted and incorporated in the revised document.	Details of air distribution as per Specification Vol-V/S-VII/SS-B:6 CL 2.15.02. is not reflected in the note sheet of the document. Please incorporate.	Air distribution to control valves shall be through SS isolating valves. Same is reflected in the Scheme of Distribution of IA system (Doc no. PE-DG-410-555-A001). Further, a note is being incorporated in the note sheet also.
3	Socket weld end for 50 Nb or below & Butt welded for size above 50 Nb	Noted & incorporated. Please refer point no. 16 at sheet no. 2.	Noted	Noted & Closed	Point Closed	Point Closed	Point Closed
4	"Other hardware is to be provided by customer". Please clearly spell out which are other hardware.	This statement got inadvertently written and not applicable. Same is deleted from revised document. Please refer point no. 19 at sheet no. 2.	Noted	Noted & Closed	Point Closed	Point Closed	Point Closed
5	Please include accessories datasheet.	Noted & included in the revised document. Please refer sheet no. 53 & 54.	Please refer marked up document for comments.	BHEL will review & incorporate as required.	Point Closed	Point Closed	Point Closed
5.1			Positioner Should be IP-65 as per specification		Noted & revised.	Noted	Point Closed
5.2			Please indicate body material, trim material, & enclosure material for SOV		Noted & Incorporated in the revised document.	Noted	Point Closed
5.3			Please clarify why PVC coating has been specified for SS tubing?		This statement got inadvertently written and not applicable. Same is deleted from revised document.	Noted	Point Closed
6	Index sheet: Please include page number for quick navigation.	Noted and incorporated. Please refer sheet no. 3.	Noted	Noted & Closed	Point Closed	Point Closed	Point Closed
7	Please indicate KKS tag no.	Noted and incorporated. Please refer individual data sheet.	Noted	Noted & Closed	Point Closed	Point Closed	Point Closed
8	Quantity of control valve shall in number, not unit wise. As only one unit is involved.	Noted and corrected. Please refer individual data sheet.	Noted	Noted & Closed	Point Closed	Point Closed	Point Closed
9	Please furnish PID reference for all control valves.	Noted and incorporated. Please refer individual data sheet.	Noted	Noted & Closed	Point Closed	Point Closed	Point Closed
10	MOC for inlet/outlet pipes could not be checked because of unavailability of PMS/pipe schedule and also it is not mentioned in P&ID's individual lines.	Noted.	Please furnish PMS/Pipe schedule and P & IDs specifying MOC of individual pipes.These docs are required to check the MOC of inlet/outlet of control valves.	The details required shall be reflected in the pipe schedule which shall be submitted separately.	Pipe Schedule shall be furnished by 30.04.2015	Pipe Schedule not furnished. Please furnish.	Pipe schedule is under process and same shall be submitted by 10.06.2015.

11	Please indicate selection of Bonnet type and Outlet velocity.	Noted and indicated in revised document in line with point no. 5 at sheet no. 2. This is general guide line and same shall be as per vendor standard practise.	As per specification Vol-VI/S-VII/SS-B cl. 2.09.02, extended bonnet shall be used where max fluid temperature is greater than 280 deg C. However for few cases (example. ASV-8) this guideline has not been followed. Please clarify.	BHEL noted & confirmed to meet the requirement.	Noted and corrected in the revised document. Please refer Data sheet for ASV-8.	Noted	Point Closed
12	Travel time shall be less than 10 sec.	Noted and corrected in revised document.	Noted	Noted & Closed	Point Closed	Point Closed	Point Closed
13	Hysteresis shall be ±0.5% and Accuracy shall be ±1% or better as per specification	Noted and corrected in revised document. Please refer individual data sheet.	Noted	Noted & Closed	Point Closed	Point Closed	Point Closed
14	Please furnish Cv, Valve lift and O/L velocity as part of preliminary calculation	Document consist of priliminary information for the design of control valves. The said information (Cv, Valve lift and O/L velocity) shall be provided after finalization of vendor and same shall be part of vendor documents.	Noted. Please update the document after receipt of vendor calculations. Valve lift and O/L velocity shall comply to specification requirement and shall be reviewed once values are furnished.	All the required details shall be available in the vendor document.	Point Closed	This document shall be updated based on vendor data for completeness of the document.	Noted. Same shall be part of vendor document.
15	Trim Form for Tag no. CDV-40, CDV-67, DMV-2, DMV-5 & FDV-8 should be multistage multipath as per specification.	In line with MOM, Trim form for FDV-8 shall be Multi-stage Multi-path. Other services control valves (CDV-40, CDV-67, DMV-2 & DMV-5) shall be provided with anti-cavitation trim.	As per resolution between TSGENCO & BHEL for BHEL PEM clarification sl no. 17 for other valves also multistage multipath design shall be adopted if cavitation is foreseen. Please select accordingly.	BHEL confirmed to supply Multistage & Multipath values in case of CDV-40 (GSC Min recirculation) & FDV-8 (Low load Feed Control Valve) only. Further, BHEL informed that CDV-67 shall be supplied as per standard norms. BHEL further informed that DMV-2 & DMV-5 shall be provided with anticavitation trim. TSGENCO & DCPL noted & confirmed. BHEL informed that cavitation is not forseen. TSGENCO requested for tight shut off.	Noted. 1) CDV-40 & FDV-8 shall be provided with Multi Stage Multi Path trim. 2) CDV-67, DMV-2 & DMV-5 shall be provided with anti-cavitation trim. 3) Same is incorporated in the revised document.	Noted	Point Closed
16	Please clarify how "Valve position on electrical signal failure" is achived.	Valve position in case of electric signal failure shall be in line with the position as indicated in respective data sheet.	Please clarify whether this shall be achieved through special function in positioned?	Noted & Closed	Point Closed	Point Closed	Point Closed
17	Local position indicator for Smart Positioner is required for all valves.	Noted and incorporated. Please refer individual data sheet.	Noted	Noted & Closed	Point Closed	Point Closed	Point Closed
18	**Control Valve Tag no. ASV-8 :** Material shall be A217 WC9 or better as per specification Vol-VI/S-VII/SS-B cl. 2.07.08 as operating temp is more than 275 DegC. (Typical comment applicable for all sheets)	Noted. Datasheet revised accordingly. Line size also corrected.	Noted.	Noted & Closed	Point Closed	Point Closed	Point Closed
19	**Control Valve Tag no. ASV-8 :** Please clarify why body design temperature has been considered at lower temperature than operating?	Design Temperature corrected in the revised document.	Please clarify why design margin has not been considered.	The parameters shall be revised accordingly.	Normal operating temperature for ASV-8 is 290 Deg C, whereas the design temperature is 310 Deg C which includes the design margin.	Noted. Please change the service condition temperature of ASV-8 as 290 deg C in the datasheet.	Noted and revised.
20	**Control Valve Tag no. CRHV-6 :** Body Material - Please comply with specification	Noted & Complied. Data sheet revised accordingly.	Noted	Noted & Closed	Point Closed	Point Closed	Point Closed
21	**Control Valve Tag no. CDV-40 :** Body Material - Please check material. Should be WC9	As valve shall be subjected to low flashing / cavitation, body material WC6 shall be suitable for the desired service.	Noted	Noted & Closed	Point Closed	Point Closed	Point Closed
22	**Control Valve Tag no. CDV-72 :** Datasheet - Please define min and normal operating conditions	The valve shall maintain aux. header pressure at 3kg/cm2(a) by modulating and meeting the aux. water requirement. The valve is not required to maintain any flow condition. Max. aux. water requirement is calc. as 4 TPH. Hence, for valve sizing purposes, the input given in the datasheet is in order.	Noted	Noted & Closed	Point Closed	Point Closed	Point Closed
23	**Control Valve Tag no. DRV-14 & 20 :** Valve position on supply air failure is "To Close". Please check.	Please note that for all HP Heaters, normal drains shall close and emergency drains shall open on supply air failure, as per fail safe philosophy.	Noted	Noted & Closed	Point Closed	Point Closed	Point Closed
24	**Control Valve Tag no. DRV-17 & 23 :** Trim Material	Noted. Datasheet revised accordingly.	Noted. Please confirm same has been taken care for other valves where severe flashing is expected.	Noted & Closed	Point Closed	Point Closed	Point Closed

25	**Control Valve Tag no. DRV-30 & 37 :** Trim Material	Refer revised datasheet. Trim Material revised.	Noted	Noted & Closed	Point Closed	Point Closed	Point Closed
26	**Control Valve Tag no. DRV-73 :** Shut-off pr. & design pr. cannot be less than service condition pr. Please check & correct.	CV inlet pressure corrected. Refer revised datasheet.	Noted	Noted & Closed	Point Closed	Point Closed	Point Closed
27	**Control Valve Tag no. DRV-5 & 11 :** Trim Material	Refer revised datasheet. Trim Material revised.	Noted	Noted & Closed	Point Closed	Point Closed	Point Closed
28	**Control Valve Tag no. DMV-2 :**	Additionally: Pipe Size - corrected. Datasheet revised accordingly.	Noted	Noted & Closed	Point Closed	Point Closed	Point Closed
29	**Control Valve Tag no. DMV-5 :** Pipe Size - Please check & correct.	Noted. Datasheet revised accordingly.	Noted	Noted & Closed	Point Closed	Point Closed	Point Closed
30	**Control Valve Tag no. FDV-8 :** Trim Material	Please note that valve shall be subjected to high DP but severe cavitation is not expected. However, trim material is changed as requested by customer.	Noted. As commented earlier valve Should be class-V as per Specification volume-VI/S-VII/SS-B cl. 2.01.00 and resolution between BHEL & TSGENCO dated 27/29-10-2014	BHEL confirmed to follow the specification. Point closed.	Noted. Leakage class for FDV-8 is revised to Class V. Please refer revised document.	Noted	Point Closed
31			It is observed that some of the earlier comments made on rev-0 document have neither been taken care nor have been clarified in the CRS(example DRV-78,FDV-8). Please incorporate /clarify all the comments made on earlier revision.	BHEL will review & reply the points.	Comments furnished on DRV-78 & FDV-8 are well taken. Leakage class is revised to Class V in individual data sheets. Please refer revised document.	Noted	Point Closed

1 X 800 MW KOTHAGUDEM TPS TSGENCO

CONTROL VALVES DESIGN PARAMETERS

REV	DATE	DESN	CHKD	APPD
03	28.05.15	PRJ	SS	SSB

A) Revised in line with DCPL comments rcd vide letter no. 13A06/DCH-4/0220 dated:14.05.2015. Further, process parameters are also revised for 7 nos. of control valves.

REV	DATE	DESN	CHKD	APPD
02	21.04.15	PRJ -sd-	SS -sd-	SSB -sd-

A) Revised in line with DCPL comments rcd vide letter no. 13A06/DCH-4/0115 dated: 09.04.2015 and subsequent meeting with TSGENCO and DCPL at HYD on 10.04.2015

REV	DATE	DESN	CHKD	APPD
01	24.03.15	PRJ -sd-	SS -sd-	SSB -sd-

A) Revised in line with customer comments rcd vide letter no. Lr. No.CPP/SE-II/421/KTPS-VII (1X800MW)/D.No.208/ 2015, dated: 05.03.2015 and DCPL email dated 06.03.2015.

CUSTOMER: TELANGANA STATE POWER GENERATION CORPORATION LTD
TELANGANA STATE, INDIA
1x800 MW KOTHAGUDAM TPS STAGE-VII UNIT#12, PALONCHA

OWNER'S CONSULTANT: DEVELOPMENT CONSULTANTS PVT. LTD.
CONSULTING ENGINEERS
KOLKATA MUMBAI CHENNAI NEW DELHI

BHARAT HEAVY ELECTRICALS LTD
POWER SECTOR
PROJECT ENGINEERING MANAGEMENT – NOIDA

COPY RIGHT AND CONFIDENTIAL
The information on this document is the property of BHARAT HEAVY ELECTRICALS LIMITED it must not be used directly or indirectly in any way deterimental to the interest of the company.

DEPT CODE		NAME	SIGN	DATE
I	DRN	RINKY	-sd-	10.02.15
	DESN	PrJ	-sd-	10.02.15
	CHD	SS	-sd-	13.02.15
	APPD	SSB	-sd-	13.02.15

TITLE: CONTROL VALVES DESIGN PARAMETERS

DEPT. SIGN SCALE

DRAWING NO. PE-TS-410-145-I104

SHEET 1 OF 54 REV. 03

GENERAL TECHNICAL REQUIREMENTS FOR CONTROL VALVE WITH PNEUMATIC ACTUATOR ALONGWITH ACCESSORIES ARE:

1. THE CONTROL VALVES' ACTUATOR SHALL BE DESIGNED FOR 150% THURST REQUIRED FOR THE VALVE (AT SHUT-OFF PRESSURE) AT AN AIR LINE SUPPLY PRESSURE OF 5.5 KG/SQ.CM.
2. CONTROL VALVES SHALL BE SIZED TO HAVE AN OPENING OF 10% MIN. AND 80% AT MAX. FLOW CONDITION. FURTHER, THE VALVE STEM TRAVEL RANGE FROM MINIMUM FLOW CONDITION TO MAXIMUM FLOW CONDITION SHALL NOT BE LESS THAN 50% OF THE TOTAL VALVE STEM TRAVEL.
3. ALL THE VALVES SHALL BE CAPABLE OF HANDLING AT LEAST 120% OF THE REQUIRED MAXIMUM FLOW.
4. CAST IRON VALVES ARE NOT ACCEPTABLE.
5. EXTENSION BONNETS SHALL BE PROVIDED WHERE THE MAXIMUM TEMPERATURE OF FLOWING FLUID IS GREATER THAN 280 DEG. C.
6. FLANGED VALVES (IF APPLICABLE) SHALL BE RATED AT NO LESS THEN ANSI PRESS CLASS OF 300 LBS.
7. ANTICAVITATION TRIMS SHALL BE PROVIDED FOR VALVES WITH CAVITATION SERVICES AND HARDENED TRIMS FOR FLASHING SERVICES.
8. CONTROL VALVE ACCESSORIES SHALL BE FITTED ON THE VALVE BODY. INTEGRAL PNEUMATIC TUBING SHALL BE ¼ "OD SS TUBING, AND FITTINGS SHALL ALSO BE OF SS. APPLICABLE ACCESSORIES SHALL BE TERMINATED AT THE JUNCTION BOX (MOUNTED ON THE BODY).
9. TYPE OF FLOW ACTION ("UNDER THE SEAT" OR "OVER THE SEAT") WILL BE SELECTED BY THE VENDOR, HOWEVER WHEREVER DOWNSTREAM SIDE IS SUBJECTED TO VACUUM, FLOW ACTION SHALL BE "FLOW TO CLOSE" (OVER THE SEAT). SEPARATE INDICATION FOR THE SAME HAS NOT BEEN PROVIDED.
10. TRIM SUPPLIED SHALL BE SUITABLE FOR QUICK CHANGING AND TRIM VELOCITY SHALL NOT EXCEED 30 M/SEC.
11. CONTROL VALVES SHALL UNDERGO QUALITY ASSURANCE PROGRAM AS PER APPROVED QUALITY PLAN.
12. THE MULTIPLE STAGES SHALL BE SUCH THAT THE CONTROLLED PRESSURE DROP ACROSS EACH STAGE SHALL ENSURE THAT THE VALVE DOES NOT CAVITATE IN ANY OF THE STAGES.
13. THE SIZING PROCEDURE FOLLOWED SHALL BE AS PER LATEST EDITION OF ANSI/ISA OR EQUIVALENT STANDARD.
14. TOLERANCE ON END TO END, CENTER TO CENTER, CENTER TO FACE SHALL BE IN ACCORDANCE WITH ANSI B16.10
15. FACILITY TO ADJUST THE MAXIMUM TRAVEL OF THE STEM SHALL BE INCORPORATED.
16. THE END CONNECTIONS SHALL BE SOCKET WELDED FOR SIZES 50NB OR BELOW AND BUTT WELDED FOR SIZES ABOVE 50NB. FLANGED CONNECTION SHALL BE PROVIDED FOR DM WATER SERVICES WITH SUITABLE RUBBER LINED INTERFACES.
17. SMART POSITIONER SHALL BE PROVIDED WITH ADVANCED DIAGNOSTIC SOFTWARE WITH FEATURES LIKE STROKE COUNTER OR TRAVEL COUNTER, LEAKAGE IN ACTUATOR, ON LINE PARTIAL CLOSURE TEST, VALVE SIGNATURE ANALYSIS, VALVE RESPONSE TEST, VALVE FIXTION/ JAMMING DETECTION ETC TO BE PROVIDED.
18. UNIVERSAL HART CALIBRATIOR (ONE PER UNIT) SHALL BE PROVIDED, COMON TO ALL SMART POSITIONERS.
19. PC AND SOFTWARE SHALL BE PROVIDED, COMMON TO ALL CONTROL VALVE POSITIONERS.
20. ENCLOUSER CLASS [INGRESS PROTECTION (IP) CLASS] FOR ALL THE ACCESSORIES SHALL BE AS SHOWN IN THE ACCESSORIES DATA SHEET.
21. NOISE LEVEL AT 1M AWAY AND 1.5M ABOVE SHALL BE WITH IN 85 dB FOR ALL THE VALVES.
22. TRAVEL TIME FOR ALL THE CONTROL VALVE SHALL BE WITH IN 10 SEC.
23. FOR NOISE ABATEMENT ISA RECOMMENDATION SHALL BE FOLLOWED.
24. BOOSTER RELAY / VOLUME BOOSTER SHALL BE PROVIDED WHEREVER REQUIRED.
25. AIR DISTRIBUTION TO CONTROL VALVES SHALL BE THROUGH SS ISOLATING VALVES.

INDEX

Sl. No	Tag No	Description	Quantity	Sht No.
1.	ASV-8	D/A PEGGING FROM AUX. STEAM HEADER	1	4
2.	CRHV-6	D/A PEGGING FROM CRH LINE	1	6
3.	CDV-22/25	MAIN CONDENSATE CONTROL	2	8
4.	CDV-40	GSC MIN. FLOW RECIRCULATION	1	10
5.	CDV-46	EXCESS RETURN TO CST	1	12
6.	CDV-67	CONDENSATE SPRAY TO FLASH TANK-B	1	14
7.	CDV-72	CONDENSATE FOR VALVE GLAND SEALING	1	16
8.	DRV-14/20	HPH-7A/7B NORMAL DRAIN TO HPH-6A/6B	2	18
9.	DRV-17/23	HPH-7A/7B ALT. DRAIN TO F/T-A	2	20
10.	DRV-27/34	HPH-6A/6B NORMAL DRAIN TO DEAERATOR	2	22
11.	DRV-30/37	HPH-6A/6B ALT. DRAIN TO F/T-A	2	24
12.	DRV-58	LPH-3 ALT. DRAIN TO F/T-B	1	26
13.	DRV-73	DEAERATOR OVERFLOW TO F/T-B	1	28
14.	DRV-2/8	HPH-8A/8B NORMAL DRAIN TO HPH-7A/7B	2	30
15.	DRV-5/11	HPH-8A/8B ALT. DRAIN TO F/T-A	2	32
16.	DRV-40	LPH-4 NORMAL DRAIN TO LPH-3	1	34
17.	DRV-43	LPH-4 ALT. DRAIN TO F/T-B	1	36
18.	DMV-2	DM NORMAL MU TO HOTWELL	1	38
19.	DMV-5	DM EMERGENCY MU TO HOTWELL	1	40
20.	FDV-8	LOW LOAD FEED CONTROL	1	42
21.	DRV-52	DRIP PUMP DISCHARGE CONTROL	1	44
22.	DRV-78	LPH-2A&2B NORMAL DRAIN TO DC-1	1	46
23.	DRV-81	LPH-2A&2B ALT. DRAIN TO F/T-B	1	48
24.	------	HOOK UP DIAGRAM		50
25.	------	ACCESSORIES DATA SHEET		53

Tag No.: ASV-8 / LBG51AA001 Qty.: 1 no. Date Sheet No. PES-145-06-DS1-0
P&ID No.: PE-DG-410-100-N103

DATA SHEET – A & B

DATA SHEET – A FOR CONTROL VALVE (WITH PNEUMATIC ACTUATOR) (TO BE FILLED BY PURCHASER)			DATA SHEET – B (TO BE FILLED UP BY BIDDER)
GENERAL*	PROJECT	TSGENCO- 1X800 MW KOTHAGUDAM TPS	.....
	SERVICE	D/A PEGGING FROM AUX. STEAM HEADER	.....
	LOCATION	[■] INDOOR [] OUTDOOR	.....
	DUTY	[] ON/OFF [■] MODULATING	.....
	PIPE SIZE (inlet / outlet)	273 x 6.35 | 508 x 10	.....
	PIPE MATERIAL (inlet / outlet)	SA 106 GR B | SA 672 GR B70	.....|.....
BODY*	MODEL NO.		.....
	TYPE OF BODY: GUIDING : NO. OF PORTS	[■] GLOBE [] ANGLE | [] TOP [■] CAGE | ONE	.....|.....|.....|.....
	BODY SIZE: PORT SIZE: DESIGN CV		.....|.....|.....
	END CONNECTION & RATING (ANSI)	[■] BWE [] SWE [] FLANGED	.....
	BODY MATERIAL	[] A216 WCB [■] A217 WC9 [] SS [] A217 CS	.....
		[] A351 CF8M	.....
	PACKING: MATERIAL SINGLE / DOUBLE	[] PTFE [■] GRAFOIL [] DOUBLE [■] SINGLE	.....|.....
	BONNET TYPE	[] STD [■] EXTENDED [] FINNED	.....
	TRIM FORM	[■] LINEAR [] EQ. PERCENTAGE	.....
		[] QUICK OPEN (ON/OFF)	
	TRIM MATERIAL: SEAT | PLUG	SS 316 STELLITED | SS 316 STELLITED	.....|.....
	: CAGE | GUIDE BUSH	SS 316 STELLITED | SS 316 STELLITED	.....|.....
	FLOW	[] BELOW SEAT [] ABOVE SEAT	.....
	OUTLET VELOCITY	[] < 7 M/SEC(WATER) | [■] MAC NO. < 1/3 (STM)	.....
	REQUIRED LEAKAGE CLASS	[] II [] III [] IV [■] V [] VI	.....
	NOISE LEVEL (dBA) (spec. 3.1.14)	LESS THAN 85 dBA	.....
	VACUUM SERVICE	[] YES [■] NO	.....
	ANTI CAVITATION TRIM	[] YES [■] NO	.....
PNEUMATIC ACTUATOR	MODEL NO. & SIZE		.....|.....
	CLOSE AT : OPEN AT (KG/CM2g)		.....|.....
	*TRAVEL TIME FOR	< 10 SEC	.....
	OPEN TO CLOSE, CLOSE TO OPEN	|	.....
	*VLV POSN. ON ELEC SIGNAL FAILURE	[■] TO OPEN [] STAYPUT [] TO CLOSE	.....
	*VALVE POSN. ON SUPPLY AIR FAILURE	[■] STAYPUT	.....
ACCESSORIES	SMART POSITIONER	[■] REQUIRED [] NOT REQUIRED	.....
	AIR FILTER REGULATOR	[■] REQUIRED [] NOT REQUIRED	.....
	AIR LOCK RELAY	[■] REQUIRED [] NOT REQUIRED	.....
	POSITION LIMIT SWITCH	[■] REQUIRED [] NOT REQUIRED	.....
	POSITION TRANSMITTER	PART OF SMART POSITIONER	.....
	SOLENOID VALVE	[■] REQUIRED [] NOT REQUIRED	.....
	E/P CONVERTER	PART OF SMART POSITIONER	.....
	JUNCTION BOX	[■] REQUIRED [] NOT REQUIRED	.....
	HAND WHEEL (SIDE MOUNTED)	[■] REQUIRED	.....
	LOCAL POSITION INDICATOR	[■] REQUIRED	.....
	ELECTRO PNEUMATIC POSITIONER	[] REQUIRED [■] NOT REQUIRED	.....

Tag No.: ASV-8 / LBG51AA101 Qty.: 1 no. Date Sheet No. PES-145-06-DS1-0

DATA SHEET – A & B

DATA SHEET – A FOR CONTROL VALVE (WITH PNEUMATIC ACTUATOR) (TO BE FILLED BY PURCHASER)			DATA SHEET – B (TO BE FILLED UP BY BIDDER)
PERFORMANCE OF VALVE	LINEARITY HYSTERISIS SENSITIVITY ACCURACY (OVERALL)	± 1% ± 0.5% ± 0.5% ± 1%	....

SERVICE CONDITION*

SL. No. +	LOAD	FLOW (T/HR)	INLET PR. KG/CM2(A)	OUTLET PR. KG/CM2(A)	TEMP DEG (C)	CALC ULATED CV	% VLV LIFT	VLV O/L VELOCITY
1.	7.5% BMCR	15	16	1.65	290			
2.	15% BMCR (COLD)	42	16	1.7	290			
3.	15% BMCR (HOT)	60	16	3.7	290			
4.	NEXT UNIT START UP W/O RC PUMP	110	16	2	290			

VALVE TYPE	[] CAVITATION [] FLASHING [■] HIGH DP
* MAX SHUT OFF PRESS (KG/CM2g) 20 * BODY DESIGN : PRESS (KG/CM2g) | TEMP (DEG C) 20 | 310 * IBR FORM III-C [■] REQUIRED [] NOT REQUIRED	....|..... .....
TOTAL WEIGHT (VALVE + ACTUATOR + ACCESSORIES) Kg	.....

NOTES:

Tag No.: CRHV-6 / LBQ10AA101 Qty.: 1 no. Date Sheet No. PES-145-06-DS1-0
P&ID No.: PE-DG-410-100-N103

DATA SHEET – A & B

DATA SHEET – A FOR CONTROL VALVE (WITH PNEUMATIC ACTUATOR) (TO BE FILLED BY PURCHASER)			DATA SHEET – B (TO BE FILLED UP BY BIDDER)
GENERAL*	PROJECT	TSGENCO- 1X800 MW KOTHAGUDAM TPS	.....
	SERVICE	D/A PEGGING FROM CRH LINE	.....
	LOCATION	[■] INDOOR [] OUTDOOR	.....
	DUTY	[] ON/OFF [■] MODULATING	.....
	PIPE SIZE (inlet / outlet)	406.4 x 16 | 965 x 34	.....
	PIPE MATERIAL (inlet / outlet)	SA 106 GR C | SA 106 GR C	.....|.....
BODY*	MODEL NO.		.....
	TYPE OF BODY: GUIDING : NO. OF PORTS	[■] GLOBE [] ANGLE | [] TOP [■] CAGE | ONE	.....|.....|.....|.....
	BODY SIZE: PORT SIZE: DESIGN CV		.....|.....|.....
	END CONNECTION & RATING (ANSI)	[■] BWE [] SWE [] FLANGED	.....
	BODY MATERIAL	[] A216 WCB [■] A217 WC9 [] SS [] A217 CS	.....
		[] A351 CF8M	.....
	PACKING: MATERIAL SINGLE / DOUBLE	[] PTFE [■] GRAFOIL [] DOUBLE [■] SINGLE	.....|.....
	BONNET TYPE	[] STD [■] EXTENDED [] FINNED	.....
	TRIM FORM	[■] LINEAR [] EQ. PERCENTAGE	.....
		[] QUICK OPEN (ON/OFF)	
	TRIM MATERIAL: SEAT | PLUG	SS 316 STELLITED | SS 316 STELLITED	.....|.....
	: CAGE | GUIDE BUSH	SS 316 STELLITED | SS 316 STELLITED	.....|.....
	FLOW	[] BELOW SEAT [] ABOVE SEAT	.....
	OUTLET VELOCITY	[] < 7 M/SEC (WATER) | [■] MAC NO. < 1/3(STM)	.....
	REQUIRED LEAKAGE CLASS	[] II [] III [] IV [■] V [] VI	.....
	NOISE LEVEL (dBA) (spec. 3.1.14)	LESS THAN 85 dBA	.....
	VACUUM SERVICE	[] YES [■] NO	.....
	ANTI CAVITATION TRIM	[] YES [■] NO	.....
PNEUMATIC ACTUATOR	MODEL NO. & SIZE		.....|.....
	CLOSE AT : OPEN AT (KG/CM2g)		.....|.....
	*TRAVEL TIME FOR	< 10 SEC	.....
	OPEN TO CLOSE, CLOSE TO OPEN	|	.....
	*VLV POSN. ON ELEC SIGNAL FAILURE	[] TO OPEN [] STAYPUT [■] TO CLOSE	.....
	*VALVE POSN. ON SUPPLY AIR FAILURE	[■] STAYPUT	.....
ACCESSORIES	SMART POSITIONER	[■] REQUIRED [] NOT REQUIRED	.....
	AIR FILTER REGULATOR	[■] REQUIRED [] NOT REQUIRED	.....
	AIR LOCK RELAY	[■] REQUIRED [] NOT REQUIRED	.....
	POSITION LIMIT SWITCH	[■] REQUIRED [] NOT REQUIRED	.....
	POSITION TRANSMITTER	PART OF SMART POSITIONER	.....
	SOLENOID VALVE	[■] REQUIRED [] NOT REQUIRED	.....
	E/P CONVERTER	PART OF SMART POSITIONER	.....
	JUNCTION BOX	[■] REQUIRED [] NOT REQUIRED	.....
	HAND WHEEL (SIDE MOUNTED)	[■] REQUIRED	.....
	LOCAL POSITION INDICATOR	[■] REQUIRED	.....
	ELECTRO PNEUMATIC POSITIONER	[] REQUIRED [■] NOT REQUIRED	.....

Tag No.: CRHV-6 / LBQ10AA101 Qty.: 1 per Unit Date Sheet No. PES-145-06-DS1-0

DATA SHEET – A & B

DATA SHEET – A FOR CONTROL VALVE (WITH PNEUMATIC ACTUATOR) (TO BE FILLED BY PURCHASER)			DATA SHEET – B (TO BE FILLED UP BY BIDDER)
PERFORMANCE OF VALVE	LINEARITY	± 1%	.....
	HYSTERISIS	± 0.5%	.....
	SENSITIVITY	± 0.5%	.....
	ACCURACY (OVERALL)	± 1%	.....

SERVICE CONDITION*

SL. No. +	LOAD	FLOW (T/HR)	INLET PR. KG/CM2(A)	OUTLET PR. KG/CM2(A)	TEMP DEG (C)	CALC ULATED CV	% VLV LIFT	VLV O/L VELOCITY
1.	15% BMCR	42	14.4	3.65	341			
2.	30% BMCR	120	20	3.65	347			
3.	60% BYPASS	214.467	37.14	4.55	360			

VALVE TYPE	[] CAVITATION [] FLASHING [■] HIGH DP
* MAX SHUT OFF PRESS (KG/CM2g) 73.5 * BODY DESIGN : PRESS (KG/CM2g) | TEMP (DEG C) 73.5 | 365 * IBR FORM III-C [■] REQUIRED [] NOT REQUIRED	....|..... .....
TOTAL WEIGHT (VALVE + ACTUATOR + ACCESSORIES) Kg	.....

NOTES:

Tag No.: CDV-22 / LCA50AA101 & CDV-25 / LCA51AA101
P&ID No.: PE-DG-410-100-N106

Qty.: 2 nos. (One against each Tag No.)
Date Sheet No. PES-145-06-DS1-0

DATA SHEET – A & B

DATA SHEET – A FOR CONTROL VALVE (WITH PNEUMATIC ACTUATOR) (TO BE FILLED BY PURCHASER)			DATA SHEET – B (TO BE FILLED UP BY BIDDER)
GENERAL*	PROJECT	TSGENCO- 1X800 MW KOTHAGUDAM TPS	.....
	SERVICE	MAIN CONDENSATE CONTROL	.....
	LOCATION	[■] INDOOR [] OUTDOOR	.....
	DUTY	[] ON/OFF [■] MODULATING	.....
	PIPE SIZE (inlet / outlet)	457 x 12.7 | 457 x 12.7	.....
	PIPE MATERIAL (inlet / outlet)	SA 106 GR C | SA 106 GR C	.....|.....
BODY*	MODEL NO.		.....
	TYPE OF BODY: GUIDING : NO. OF PORTS	[■] GLOBE [] ANGLE | [] TOP [■] CAGE | ONE	.....|.....|.....|.....
	BODY SIZE: PORT SIZE: DESIGN CV		.....|.....|.....
	END CONNECTION & RATING (ANSI)	[■] BWE [] SWE [] FLANGED	.....
	BODY MATERIAL	[■] A216 WCB [] A217 WC6 [] SS [] A217 CS	.....
		[] A351 CF8M	.....
	PACKING: MATERIAL SINGLE / DOUBLE	[] PTFE [■] GRAFOIL [] DOUBLE [■] SINGLE	.....|.....
	BONNET TYPE	[■] STD [] EXTENDED [] FINNED	.....
	TRIM FORM	[] LINEAR [■] EQ. PERCENTAGE	.....
		[] QUICK OPEN (ON/OFF)	
	TRIM MATERIAL: SEAT | PLUG	SS 316 STELLITED | SS 316 STELLITED	.....|.....
	: CAGE | GUIDE BUSH	SS 316 STELLITED | SS 316 STELLITED	.....|.....
	FLOW	[] BELOW SEAT [] ABOVE SEAT	.....
	OUTLET VELOCITY	[■] < 7 M/SEC (WATER) | [] MAC NO. < 1/3(STM)	.....
	REQUIRED LEAKAGE CLASS	[] II [] III [] IV [■] V [] VI	.....
	NOISE LEVEL (dBA) (spec. 3.1.14)	LESS THAN 85 dBA	.....
	VACUUM SERVICE	[] YES [■] NO	.....
	ANTI CAVITATION TRIM	[] YES [■] NO	.....
PNEUMATIC ACTUATOR	MODEL NO. & SIZE		.....|.....
	CLOSE AT : OPEN AT (KG/CM2g)		.....|.....
	*TRAVEL TIME FOR	< 10 SEC	.....
	OPEN TO CLOSE, CLOSE TO OPEN	|	.....
	*VLV POSN. ON ELEC SIGNAL FAILURE	[] TO OPEN [■] STAYPUT [] TO CLOSE	.....
	*VALVE POSN. ON SUPPLY AIR FAILURE	[■] STAYPUT	.....
ACCESSORIES	SMART POSITIONER	[■] REQUIRED [] NOT REQUIRED	.....
	AIR FILTER REGULATOR	[■] REQUIRED [] NOT REQUIRED	.....
	AIR LOCK RELAY	[■] REQUIRED [] NOT REQUIRED	.....
	POSITION LIMIT SWITCH	[■] REQUIRED [] NOT REQUIRED	.....
	POSITION TRANSMITTER	PART OF SMART POSITIONER	.....
	SOLENOID VALVE	[■] REQUIRED [] NOT REQUIRED	.....
	E/P CONVERTER	PART OF SMART POSITIONER	.....
	JUNCTION BOX	[■] REQUIRED [] NOT REQUIRED	.....
	HAND WHEEL (SIDE MOUNTED)	[■] REQUIRED	.....
	LOCAL POSITION INDICATOR	[■] REQUIRED	.....
	ELECTRO PNEUMATIC POSITIONER	[] REQUIRED [■] NOT REQUIRED	.....

Tag No.: CDV-22 / LCA50AA101 & CDV-25 / LCA51AA101

Qty.: 2 nos. (One against each Tag No.)
Date Sheet No. PES-145-06-DS1-0

DATA SHEET – A & B

DATA SHEET – A FOR CONTROL VALVE (WITH PNEUMATIC ACTUATOR) (TO BE FILLED BY PURCHASER)			DATA SHEET – B (TO BE FILLED UP BY BIDDER)
PERFORMANCE OF VALVE	LINEARITY	± 1%	.....
	HYSTERISIS	± 0.5%	.....
	SENSITIVITY	± 0.5%	.....
	ACCURACY (OVERALL)	± 1%	.....

SERVICE CONDITION*

SL. No.	LOAD	FLOW (T/HR)	INLET PR. KG/CM2(A)	OUTLET PR. KG/CM2(A)	TEMP DEG (C)	CALC ULATED CV	% VLV LIFT	VLV O/L VELOCITY
1.	DESIGN POINT (PUMP)	1835	28	26	42.7			
2.	60% LOAD	937.109	35	22	39.3			
3.	100% MCR	1526.438	33	24	42.5			
4.	VWO	1648.061	31	26	42.7			
5.	MIN. (10% LOAD)	152.6	38	8	40			
6.	HP-LP Bypass	1506.347	22	16	52.3			

VALVE TYPE	[] CAVITATION [] FLASHING [■] HIGH DP
* MAX SHUT OFF PRESS (KG/CM2g) 47 * BODY DESIGN : PRESS (KG/CM2g) | TEMP (DEG C) 47 | 55 * IBR FORM III-C [] REQUIRED [■] NOT REQUIRED	....|..... .....
TOTAL WEIGHT (VALVE + ACTUATOR + ACCESSORIES) Kg	.....

NOTES:

Tag No.: CDV-40 / LCA31AA101 Qty.: 1 no. Date Sheet No. PES-145-06-DS1-0
P&ID No.: PE-DG-410-100-N106

DATA SHEET – A & B

DATA SHEET – A FOR CONTROL VALVE (WITH PNEUMATIC ACTUATOR) (TO BE FILLED BY PURCHASER)			DATA SHEET – B (TO BE FILLED UP BY BIDDER)
GENERAL*	PROJECT	TSGENCO- 1X800 MW KOTHAGUDAM TPS	.....
	SERVICE	GSC MIN. FLOW RECIRCULATION	.....
	LOCATION	[■] INDOOR [] OUTDOOR	.....
	DUTY	[] ON/OFF [■] MODULATING	.....
	PIPE SIZE (inlet / outlet)	168.3X7.11 | 168.3 x 7.11	.....
	PIPE MATERIAL (inlet / outlet)	SA 106 GR C | SA 106 GR C	.....|.....
BODY*	MODEL NO.		.....
	TYPE OF BODY: GUIDING : NO. OF PORTS	[■] GLOBE [] ANGLE | [] TOP [■] CAGE | ONE	.....|.....|.....|.....
	BODY SIZE: PORT SIZE: DESIGN CV		.....|.....|.....
	END CONNECTION & RATING (ANSI)	[■] BWE [] SWE [] FLANGED	.....
	BODY MATERIAL	[] A216 WCB [■] A217 WC6 [] SS [] A217 CS	.....
		[] A351 CF8M	.....
	PACKING: MATERIAL SINGLE / DOUBLE	[] PTFE [■] GRAFOIL [■] DOUBLE [] SINGLE	.....|.....
	BONNET TYPE	[■] STD [] EXTENDED [] FINNED	.....
	TRIM FORM	[■] LINEAR (MULTI STAGE & MULTI PATH)	.....
		[] EQ. PERCENTAGE [] QUICK OPEN (ON/OFF)	
	TRIM MATERIAL: SEAT | PLUG	17-4 PH SS | 17-4 PH SS	.....|.....
	: CAGE | GUIDE BUSH	17-4 PH SS | 17-4 PH SS	.....|.....
	FLOW	[] BELOW SEAT [] ABOVE SEAT	.....
	OUTLET VELOCITY	[■] < 7 M/SEC (WATER) | [] MAC NO. < 1/3(STM)	.....
	REQUIRED LEAKAGE CLASS	[] II [] III [] IV [■] V [] VI	.....
	NOISE LEVEL (dBA) (spec. 3.1.14)	LESS THAN 85 dBA	.....
	VACUUM SERVICE	[■] YES [] NO	.....
	ANTI CAVITATION TRIM	[■] YES [] NO	.....
PNEUMATIC ACTUATOR	MODEL NO. & SIZE		.....|.....
	CLOSE AT : OPEN AT (KG/CM2g)		.....|.....
	*TRAVEL TIME FOR	< 10 SEC	.....
	OPEN TO CLOSE, CLOSE TO OPEN	|	.....
	*VLV POSN. ON ELEC SIGNAL FAILURE	[■] TO OPEN [] STAYPUT [] TO CLOSE	.....
	*VALVE POSN. ON SUPPLY AIR FAILURE	[■] STAYPUT	.....
ACCESSORIES	SMART POSITIONER	[■] REQUIRED [] NOT REQUIRED	.....
	AIR FILTER REGULATOR	[■] REQUIRED [] NOT REQUIRED	.....
	AIR LOCK RELAY	[■] REQUIRED [] NOT REQUIRED	.....
	POSITION LIMIT SWITCH	[■] REQUIRED [] NOT REQUIRED	.....
	POSITION TRANSMITTER	PART OF SMART POSITIONER	.....
	SOLENOID VALVE	[■] REQUIRED [] NOT REQUIRED	.....
	E/P CONVERTER	PART OF SMART POSITIONER	.....
	JUNCTION BOX	[■] REQUIRED [] NOT REQUIRED	.....
	HAND WHEEL (SIDE MOUNTED)	[■] REQUIRED	.....
	LOCAL POSITION INDICATOR	[■] REQUIRED	.....
	ELECTRO PNEUMATIC POSITIONER	[] REQUIRED [■] NOT REQUIRED	.....

Tag No.: CDV-40 / LCA31AA101 Qty.: …1 no. Date Sheet No. PES-145-06-DS1-0

DATA SHEET – A & B

DATA SHEET – A FOR CONTROL VALVE (WITH PNEUMATIC ACTUATOR) (TO BE FILLED BY PURCHASER)			DATA SHEET – B (TO BE FILLED UP BY BIDDER)
PERFORMANCE OF VALVE	LINEARITY HYSTERISIS SENSITIVITY ACCURACY (OVERALL)	± 1% ± 0.5% ± 0.5% ± 1%	…… …… …… ……

SERVICE CONDITION*

SL. No. +	LOAD	FLOW (T/HR)	INLET PR. KG/CM2(A)	OUTLET PR. KG/CM2(A)	TEMP DEG (C)	CALC ULATED CV	% VLV LIFT	VLV O/L VELOCITY
1.	MIN.	32.4	42.5	0.3	49			
2.	MAX	324	40.5	0.7	50			

VALVE TYPE	[■] CAVITATION [] FLASHING [■] HIGH DP
* MAX SHUT OFF PRESS (KG/CM2g) 47 * BODY DESIGN : PRESS (KG/CM2g) | TEMP (DEG C) 47/VACUUM | 55 * IBR FORM III-C [] REQUIRED [■] NOT REQUIRED	…… ……|…… ……
TOTAL WEIGHT (VALVE + ACTUATOR + ACCESSORIES) Kg	……

Tag No.: CDV-46 / LCA41AA101 Qty.: 1 no. Date Sheet No. PES-145-06-DS1-0
P&ID No.: PE-DG-410-100-N106

DATA SHEET – A & B

DATA SHEET – A FOR CONTROL VALVE (WITH PNEUMATIC ACTUATOR) (TO BE FILLED BY PURCHASER)			DATA SHEET – B (TO BE FILLED UP BY BIDDER)
GENERAL*	PROJECT	TSGENCO- 1X800 MW KOTHAGUDAM TPS	.....
	SERVICE	EXCESS RETURN TO CST	.....
	LOCATION	[■] INDOOR [] OUTDOOR	.....
	DUTY	[] ON/OFF [■] MODULATING	.....
	PIPE SIZE (inlet / outlet)	219.1 x 8.18 | 219.1 x 8.18	.....
	PIPE MATERIAL (inlet / outlet)	SA 106 GR C | SA 106 GR C	.....|.....
BODY*	MODEL NO.		.....
	TYPE OF BODY: GUIDING : NO. OF PORTS	[] GLOBE [■] ANGLE | [] TOP [■] CAGE | ONE	.....|.....|.....|.....
	BODY SIZE: PORT SIZE: DESIGN CV		.....|.....|.....
	END CONNECTION & RATING (ANSI)	[■] BWE [] SWE [] FLANGED	.....
	BODY MATERIAL	[] A216 WCB [■] A217 WC6 [] SS [] A217 CS	.....
		[] A351 CF8M	.....
	PACKING: MATERIAL SINGLE / DOUBLE	[] PTFE [■] GRAFOIL [] DOUBLE [■] SINGLE	.....|.....
	BONNET TYPE	[■] STD [] EXTENDED [] FINNED	.....
	TRIM FORM	[■] LINEAR [] EQ. PERCENTAGE	.....
		[] QUICK OPEN (ON/OFF)	
	TRIM MATERIAL: SEAT | PLUG	17-4 PH SS | 17-4 PH SS	.....|.....
	: CAGE | GUIDE BUSH	17-4 PH SS | 17-4 PH SS	.....|.....
	FLOW	[] BELOW SEAT [] ABOVE SEAT	.....
	OUTLET VELOCITY	[■] < 7 M/SEC (WATER) | [] MAC NO. < 1/3(STM)	.....
	REQUIRED LEAKAGE CLASS	[] II [] III [] IV [■] V [] VI	.....
	NOISE LEVEL (dBA) (spec. 3.1.14)	LESS THAN 85 dBA	.....
	VACUUM SERVICE	[] YES [■] NO	.....
	ANTI CAVITATION TRIM	[■] YES [] NO	.....
PNEUMATIC ACTUATOR	MODEL NO. & SIZE		.....|.....
	CLOSE AT : OPEN AT (KG/CM2g)		.....|.....
	*TRAVEL TIME FOR	< 10 SEC	.....
	OPEN TO CLOSE, CLOSE TO OPEN	|	.....
	*VLV POSN. ON ELEC SIGNAL FAILURE	[] TO OPEN [■] STAYPUT [] TO CLOSE	.....
	*VALVE POSN. ON SUPPLY AIR FAILURE	[■] STAYPUT	.....
ACCESSORIES	SMART POSITIONER	[■] REQUIRED [] NOT REQUIRED	.....
	AIR FILTER REGULATOR	[■] REQUIRED [] NOT REQUIRED	.....
	AIR LOCK RELAY	[■] REQUIRED [] NOT REQUIRED	.....
	POSITION LIMIT SWITCH	[■] REQUIRED [] NOT REQUIRED	.....
	POSITION TRANSMITTER	PART OF SMART POSITIONER	.....
	SOLENOID VALVE	[■] REQUIRED [] NOT REQUIRED	.....
	E/P CONVERTER	PART OF SMART POSITIONER	.....
	JUNCTION BOX	[■] REQUIRED [] NOT REQUIRED	.....
	HAND WHEEL (SIDE MOUNTED)	[■] REQUIRED	.....
	LOCAL POSITION INDICATOR	[■] REQUIRED	.....
	ELECTRO PNEUMATIC POSITIONER	[] REQUIRED [■] NOT REQUIRED	.....

Tag No.: CDV-46 / LCA41AA101 Qty.: 1 no. Date Sheet No. PES-145-06-DS1-0

DATA SHEET – A & B

DATA SHEET – A FOR CONTROL VALVE (WITH PNEUMATIC ACTUATOR) (TO BE FILLED BY PURCHASER)			DATA SHEET – B (TO BE FILLED UP BY BIDDER)
PERFORMANCE OF VALVE	LINEARITY HYSTERISIS SENSITIVITY ACCURACY (OVERALL)	± 1% ± 0.5% ± 0.5% ± 1%	....

SERVICE CONDITION*

SL. No. +	LOAD	FLOW (T/HR)	INLET PR. KG/CM2(A)	OUTLET PR. KG/CM2(A)	TEMP DEG (C)	CALC ULATED CV	% VLV LIFT	VLV O/L VELOCITY
1.	MIN.	40	36.5	4.0	50			
2.	MAX	415	32.5	5.0	42.7			

VALVE TYPE	[■] CAVITATION [] FLASHING [■] HIGH DP
* MAX SHUT OFF PRESS (KG/CM2g) 47 * BODY DESIGN : PRESS (KG/CM2g) | TEMP (DEG C) 47 | 55 * IBR FORM III-C [] REQUIRED [■] NOT REQUIRED	....|..... .....
TOTAL WEIGHT (VALVE + ACTUATOR + ACCESSORIES) Kg	.....

NOTES:

Tag No.: CDV-67 / LCA34AA101 Qty.: 1 no. Date Sheet No. PES-145-06-DS1-0
P&ID No.: PE-DG-410-100-N111

DATA SHEET – A & B

DATA SHEET – A FOR CONTROL VALVE (WITH PNEUMATIC ACTUATOR) (TO BE FILLED BY PURCHASER)			DATA SHEET – B (TO BE FILLED UP BY BIDDER)
GENERAL*	PROJECT	TSGENCO- 1X800 MW KOTHAGUDAM TPS	.....
	SERVICE	CONDENSATE SPRAY TO FLASH TANK-B	.....
	LOCATION	[■] INDOOR [] OUTDOOR	.....
	DUTY	[■] ON/OFF [] MODULATING	.....
	PIPE SIZE (inlet / outlet)	33.4 x 4.55 | 33.4 x 4.55	.....
	PIPE MATERIAL (inlet / outlet)	SA 106 GR B | SA 106 GR B	.....|.....
BODY*	MODEL NO.		.....
	TYPE OF BODY: GUIDING : NO. OF PORTS	[■] GLOBE [] ANGLE | [] TOP [■] CAGE | ONE	.....|.....|.....|.....
	BODY SIZE: PORT SIZE: DESIGN CV		.....|.....|.....
	END CONNECTION & RATING (ANSI)	[] BWE [■] SWE [] FLANGED	.....
	BODY MATERIAL	[] A216 WCB [■] A217 WC6 [] SS [] A217 CS	.....
		[] A351 CF8M	.....
	PACKING: MATERIAL SINGLE / DOUBLE	[] PTFE [■] GRAFOIL [■] DOUBLE [] SINGLE	.....|.....
	BONNET TYPE	[■] STD [] EXTENDED [] FINNED	.....
	TRIM FORM	[] LINEAR [] EQ. PERCENTAGE	.....
		[■] QUICK OPEN (ON/OFF)	
	TRIM MATERIAL: SEAT | PLUG	17-4 PH SS | 17-4 PH SS	.....|.....
	: CAGE | GUIDE BUSH	17-4 PH SS | 17-4 PH SS	.....|.....
	FLOW	[] BELOW SEAT [] ABOVE SEAT	.....
	OUTLET VELOCITY	[■] < 7 M/SEC (WATER) | [] MAC NO. < 1/3(STM)	.....
	REQUIRED LEAKAGE CLASS	[] II [] III [] IV [■] V [] VI	.....
	NOISE LEVEL (dBA) (spec. 3.1.14)	LESS THAN 85 dBA	.....
	VACUUM SERVICE	[■] YES [] NO	.....
	ANTI CAVITATION TRIM	[■] YES [] NO	.....
PNEUMATIC ACTUATOR	MODEL NO. & SIZE		.....|.....
	CLOSE AT : OPEN AT (KG/CM2g)		.....|.....
	*TRAVEL TIME FOR	< 10 SEC	.....
	OPEN TO CLOSE, CLOSE TO OPEN	|	.....
	*VLV POSN. ON ELEC SIGNAL FAILURE	[■] TO OPEN [] STAYPUT [] TO CLOSE	.....
	*VALVE POSN. ON SUPPLY AIR FAILURE	[■] STAYPUT	.....
ACCESSORIES	SMART POSITIONER	[] REQUIRED [■] NOT REQUIRED	.....
	AIR FILTER REGULATOR	[■] REQUIRED [] NOT REQUIRED	.....
	AIR LOCK RELAY	[■] REQUIRED [] NOT REQUIRED	.....
	POSITION LIMIT SWITCH	[■] REQUIRED [] NOT REQUIRED	.....
	POSITION TRANSMITTER	[] REQUIRED [■] NOT REQUIRED	.....
	SOLENOID VALVE	[■] REQUIRED [] NOT REQUIRED	.....
	E/P CONVERTER	[] REQUIRED [■] NOT REQUIRED	.....
	JUNCTION BOX	[■] REQUIRED [] NOT REQUIRED	.....
	HAND WHEEL (SIDE MOUNTED)	[■] REQUIRED	.....
	LOCAL POSITION INDICATOR	[■] REQUIRED	.....
	ELECTRO PNEUMATIC POSITIONER	[] REQUIRED [■] NOT REQUIRED	.....

Tag No.: CDV-67 / LCA34AA101 Qty.: 1 no. Date Sheet No. PES-145-06-DS1-0

DATA SHEET – A & B

DATA SHEET – A FOR CONTROL VALVE (WITH PNEUMATIC ACTUATOR) (TO BE FILLED BY PURCHASER)			DATA SHEET – B (TO BE FILLED UP BY BIDDER)
PERFORMANCE OF VALVE	LINEARITY HYSTERISIS SENSITIVITY ACCURACY (OVERALL)	± 5% ± 5% ± 0.5% ± 1%	....

SERVICE CONDITION*

SL. No. +	LOAD	FLOW (T/HR)	INLET PR. KG/CM2(A)	OUTLET PR. KG/CM2(A)	TEMP DEG (C)	CALC ULATED CV	% VLV LIFT	VLV O/L VELOCITY
1.	MAX.	10	35.0	0.5	50			

VALVE TYPE	[■] CAVITATION [] FLASHING [■] HIGH DP
* MAX SHUT OFF PRESS (KG/CM2g) 47 * BODY DESIGN : PRESS (KG/CM2g) | TEMP (DEG C) 47/VACUUM | 55 * IBR FORM III-C [] REQUIRED [■] NOT REQUIRED	....|..... .....
TOTAL WEIGHT (VALVE + ACTUATOR + ACCESSORIES) Kg	.....

NOTES: ANTI CAVITATION TRIM SHALL BE PROVIDED

Tag No.: CDV-72 / LCA33AA101 Qty.: 1 no. Date Sheet No. PES-145-06-DS1-0
P&ID No.: PE-DG-410-100-N106

DATA SHEET – A & B

DATA SHEET – A FOR CONTROL VALVE (WITH PNEUMATIC ACTUATOR) (TO BE FILLED BY PURCHASER)			DATA SHEET – B (TO BE FILLED UP BY BIDDER)
GENERAL*	PROJECT	TSGENCO- 1X800 MW KOTHAGUDAM TPS	.....
	SERVICE	CONDENSATE FOR VALVE GLAND SEALING	.....
	LOCATION	[■] INDOOR [] OUTDOOR	.....
	DUTY	[] ON/OFF [■] MODULATING	.....
	PIPE SIZE (inlet / outlet)	60.3 x 5.54 | 60.3 x 5.54	.....
	PIPE MATERIAL (inlet / outlet)	SA 106 GR B | SA 106 GR B	.....|.....
BODY*	MODEL NO.		.....
	TYPE OF BODY: GUIDING : NO. OF PORTS	[■] GLOBE [] ANGLE | [] TOP [■] CAGE | ONE	.....|.....|.....|.....
	BODY SIZE: PORT SIZE: DESIGN CV		.....|.....|.....
	END CONNECTION & RATING (ANSI)	[■] BWE [] SWE [] FLANGED	.....
	BODY MATERIAL	[■] A216 WCB [] A217 WC6 [] SS [] A217 CS	.....
		[] A351 CF8M	.....
	PACKING: MATERIAL SINGLE / DOUBLE	[] PTFE [■] GRAFOIL [] DOUBLE [■] SINGLE	.....|.....
	BONNET TYPE	[■] STD [] EXTENDED [] FINNED	.....
	TRIM FORM	[] LINEAR [■] EQ. PERCENTAGE	.....
		[] QUICK OPEN (ON/OFF)	
	TRIM MATERIAL: SEAT | PLUG	17-4 PH SS | 17-4 PH SS	.....|.....
	: CAGE | GUIDE BUSH	17-4 PH SS | 17-4 PH SS	.....|.....
	FLOW	[] BELOW SEAT [] ABOVE SEAT	.....
	OUTLET VELOCITY	[■] < 7 M/SEC (WATER) | [] MAC NO. < 1/3(STM)	.....
	REQUIRED LEAKAGE CLASS	[] II [] III [] IV [■] V [] VI	.....
	NOISE LEVEL (dBA) (spec. 3.1.14)	LESS THAN 85 dBA	.....
	VACUUM SERVICE	[] YES [■] NO	.....
	ANTI CAVITATION TRIM	[] YES [■] NO	.....
PNEUMATIC ACTUATOR	MODEL NO. & SIZE		.....|.....
	CLOSE AT : OPEN AT (KG/CM2g)		.....|.....
	*TRAVEL TIME FOR	< 10 SEC	.....
	OPEN TO CLOSE, CLOSE TO OPEN	|	.....
	*VLV POSN. ON ELEC SIGNAL FAILURE	[■] TO OPEN [] STAYPUT [] TO CLOSE	.....
	*VALVE POSN. ON SUPPLY AIR FAILURE	[■] STAYPUT	.....
ACCESSORIES	SMART POSITIONER	[■] REQUIRED [] NOT REQUIRED	.....
	AIR FILTER REGULATOR	[■] REQUIRED [] NOT REQUIRED	.....
	AIR LOCK RELAY	[■] REQUIRED [] NOT REQUIRED	.....
	POSITION LIMIT SWITCH	[■] REQUIRED [] NOT REQUIRED	.....
	POSITION TRANSMITTER	PART OF SMART POSITIONER	.....
	SOLENOID VALVE	[■] REQUIRED [] NOT REQUIRED	.....
	E/P CONVERTER	PART OF SMART POSITIONER	.....
	JUNCTION BOX	[■] REQUIRED [] NOT REQUIRED	.....
	HAND WHEEL (SIDE MOUNTED)	[■] REQUIRED	.....
	LOCAL POSITION INDICATOR	[■] REQUIRED	.....
	ELECTRO PNEUMATIC POSITIONER	[] REQUIRED [■] NOT REQUIRED	.....

Tag No.: CDV-72 / LCA33AA101 Qty.: 1 no. Date Sheet No. PES-145-06-DS1-0

DATA SHEET – A & B

DATA SHEET – A FOR CONTROL VALVE (WITH PNEUMATIC ACTUATOR) (TO BE FILLED BY PURCHASER)			DATA SHEET – B (TO BE FILLED UP BY BIDDER)
PERFORMANCE OF VALVE	LINEARITY HYSTERISIS SENSITIVITY ACCURACY (OVERALL)	± 1% ± 0.5% ± 0.5% ± 1%	....

SERVICE CONDITION*

SL. No. +	LOAD	FLOW (T/HR)	INLET PR. KG/CM2(A)	OUTLET PR. KG/CM2(A)	TEMP DEG (C)	CALC ULATED CV	% VLV LIFT	VLV O/L VELOCITY
1.	MAX.	4	31	3.0	50			

VALVE TYPE	[] CAVITATION [] FLASHING [■] HIGH DP
* MAX SHUT OFF PRESS (KG/CM2g) 47 * BODY DESIGN : PRESS (KG/CM2g) | TEMP (DEG C) 47 | 55 * IBR FORM III-C [] REQUIRED [■] NOT REQUIRED	....|..... .....
TOTAL WEIGHT (VALVE + ACTUATOR + ACCESSORIES) Kg	.....

NOTES:

Tag No.: DRV-14 / LCH30AA101 & DRV-20 / LCH40AA101
P&ID No.: PE-DG-410-100-N104

Qty.: 2 nos. (One against each Tag No.)
Date Sheet No. PES-145-06-DS1-0

DATA SHEET – A & B

DATA SHEET – A FOR CONTROL VALVE (WITH PNEUMATIC ACTUATOR) (TO BE FILLED BY PURCHASER)			DATA SHEET – B (TO BE FILLED UP BY BIDDER)
GENERAL*	PROJECT	TSGENCO- 1X800 MW KOTHAGUDAM TPS	.....
	SERVICE	HPH-7A/7B NORMAL DRAIN TO HPH-6A/6B	.....
	LOCATION	[■] INDOOR [] OUTDOOR	.....
	DUTY	[] ON/OFF [■] MODULATING	.....
	PIPE SIZE (inlet / outlet)	273 x 12.7 | 273 x 12.7	.....
	PIPE MATERIAL (inlet / outlet)	SA 106 GR C | SA 106 GR C	.....|.....
BODY*	MODEL NO.		.....
	TYPE OF BODY: GUIDING : NO. OF PORTS	[■] GLOBE [] ANGLE | [] TOP [■] CAGE | ONE	.....|.....|.....|.....
	BODY SIZE: PORT SIZE: DESIGN CV		.....|.....|.....
	END CONNECTION & RATING (ANSI)	[■] BWE [] SWE [] FLANGED	.....
	BODY MATERIAL	[] A216 WCB [■] A217 WC6 [] SS [] A217 CS	.....
		[] A351 CF8M	.....
	PACKING: MATERIAL SINGLE / DOUBLE	[] PTFE [■] GRAFOIL [] DOUBLE [■] SINGLE	.....|.....
	BONNET TYPE	[■] STD [] EXTENDED [] FINNED	.....
	TRIM FORM	[■] LINEAR [] EQ. PERCENTAGE	.....
		[] QUICK OPEN (ON/OFF)	
	TRIM MATERIAL: SEAT | PLUG	17-4 PH SS | 17-4 PH SS	.....|.....
	: CAGE | GUIDE BUSH	17-4 PH SS | 17-4 PH SS	.....|.....
	FLOW	[] BELOW SEAT [] ABOVE SEAT	.....
	OUTLET VELOCITY	[■] < 7 M/SEC (WATER) | [] MAC NO. < 1/3(STM)	.....
	REQUIRED LEAKAGE CLASS	[] II [] III [■] IV [] V [] VI	.....
	NOISE LEVEL (dBA) (spec. 3.1.14)	LESS THAN 85 dBA	.....
	VACUUM SERVICE	[] YES [■] NO	.....
	ANTI CAVITATION TRIM	[] YES [■] NO	.....
PNEUMATIC ACTUATOR	MODEL NO. & SIZE		.....|.....
	CLOSE AT : OPEN AT (KG/CM2g)		.....|.....
	*TRAVEL TIME FOR	< 10 SEC	.....
	OPEN TO CLOSE, CLOSE TO OPEN	|	.....
	*VLV POSN. ON ELEC SIGNAL FAILURE	[] TO OPEN [] STAYPUT [■] TO CLOSE	.....
	*VALVE POSN. ON SUPPLY AIR FAILURE	[■] TO CLOSE	.....
ACCESSORIES	SMART POSITIONER	[■] REQUIRED [] NOT REQUIRED	.....
	AIR FILTER REGULATOR	[■] REQUIRED [] NOT REQUIRED	.....
	AIR LOCK RELAY	[■] REQUIRED [] NOT REQUIRED	.....
	POSITION LIMIT SWITCH	[■] REQUIRED [] NOT REQUIRED	.....
	POSITION TRANSMITTER	PART OF SMART POSITIONER	.....
	SOLENOID VALVE	[■] REQUIRED [] NOT REQUIRED	.....
	E/P CONVERTER	PART OF SMART POSITIONER	.....
	JUNCTION BOX	[■] REQUIRED [] NOT REQUIRED	.....
	HAND WHEEL (SIDE MOUNTED)	[■] REQUIRED	.....
	LOCAL POSITION INDICATOR	[■] REQUIRED	.....
	ELECTRO PNEUMATIC POSITIONER	[] REQUIRED [■] NOT REQUIRED	.....

Tag No.: DRV-14 / LCH30AA101 & DRV-20 / LCH40AA101

Qty.: 2 nos. (One against each Tag No.)
Date Sheet No. PES-145-06-DS1-0

DATA SHEET – A & B

DATA SHEET – A FOR CONTROL VALVE (WITH PNEUMATIC ACTUATOR) (TO BE FILLED BY PURCHASER)			DATA SHEET – B (TO BE FILLED UP BY BIDDER)
PERFORMANCE OF VALVE	LINEARITY	± 1%	.....
	HYSTERISIS	± 0.5%	.....
	SENSITIVITY	± 0.5%	.....
	ACCURACY (OVERALL)	± 1%	.....

SERVICE CONDITION*

SL. No. +	LOAD	FLOW (T/HR)	INLET PR. KG/CM2(A)	OUTLET PR. KG/CM2(A)	TEMP DEG (C)	CALC ULATED CV	% VLV LIFT	VLV O/L VELOCITY
1.	40% MCR	50.369	23.61	9.71	178.0			
2.	60% MCR	89.477	35.48	14.33	195.5			
3.	100% MCR	195.092	58.79	23.4	221.8			
4.	VWO	215.625	62.9	25.01	225.5			
5.	BMCR	222.813	62.24	24.58	224.6			

VALVE TYPE	[] CAVITATION [■] FLASHING [] HIGH DP
* MAX SHUT OFF PRESS (KG/CM2g) 70 * BODY DESIGN : PRESS (KG/CM2g) | TEMP (DEG C) 70 | 235 * IBR FORM III-C [] REQUIRED [■] NOT REQUIRED	....|..... .....
TOTAL WEIGHT (VALVE + ACTUATOR + ACCESSORIES) Kg	.....

NOTES:

Tag No.: DRV-17 / LCH35AA101 & DRV-23 / LCH45AA101
P&ID No.: PE-DG-410-100-N104

Qty.: 2 nos. (One against each Tag No.)
Date Sheet No. PES-145-06-DS1-0

DATA SHEET – A & B

DATA SHEET – A FOR CONTROL VALVE (WITH PNEUMATIC ACTUATOR) (TO BE FILLED BY PURCHASER)			DATA SHEET – B (TO BE FILLED UP BY BIDDER)
GENERAL*	PROJECT	TSGENCO- 1X800 MW KOTHAGUDAM TPS	.....
	SERVICE	HPH-7A/7B ALT. DRAIN TO F/T-A	.....
	LOCATION	[■] INDOOR [] OUTDOOR	.....
	DUTY	[] ON/OFF [■] MODULATING	.....
	PIPE SIZE (inlet / outlet)	273 x 12.7 | 323.9 x 12.7	.....
	PIPE MATERIAL (inlet / outlet)	SA 106 GR C | SA 106 GR C	.....|.....
BODY*	MODEL NO.		.....
	TYPE OF BODY: GUIDING : NO. OF PORTS	[■] GLOBE [] ANGLE | [] TOP [■] CAGE | ONE	.....|.....|.....|.....
	BODY SIZE: PORT SIZE: DESIGN CV		.....|.....|.....
	END CONNECTION & RATING (ANSI)	[■] BWE [] SWE [] FLANGED	.....
	BODY MATERIAL	[] A216 WCB [■] A217 WC9 [] SS [] A217 CS	.....
		[] A351 CF8M	.....
	PACKING: MATERIAL SINGLE / DOUBLE	[] PTFE [■] GRAFOIL [■] DOUBLE [] SINGLE	.....|.....
	BONNET TYPE	[■] STD [] EXTENDED [] FINNED	.....
	TRIM FORM	[■] LINEAR [] EQ. PERCENTAGE	.....
		[] QUICK OPEN (ON/OFF)	
	TRIM MATERIAL: SEAT | PLUG	440C | 440C	.....|.....
	: CAGE | GUIDE BUSH	440C | 440C	.....|.....
	FLOW	[] BELOW SEAT [] ABOVE SEAT	.....
	OUTLET VELOCITY	[■] < 7 M/SEC (WATER) | [] MAC NO. < 1/3(STM)	.....
	REQUIRED LEAKAGE CLASS	[] II [] III [] IV [■] V [] VI	.....
	NOISE LEVEL (dBA) (spec. 3.1.14)	LESS THAN 85 dBA	.....
	VACUUM SERVICE	[■] YES [] NO	.....
	ANTI CAVITATION TRIM	[] YES [■] **NO**	.....
PNEUMATIC ACTUATOR	MODEL NO. & SIZE		.....|.....
	CLOSE AT : OPEN AT (KG/CM2g)		.....|.....
	*TRAVEL TIME FOR	< 10 SEC	.....
	OPEN TO CLOSE, CLOSE TO OPEN	|	.....
	*VLV POSN. ON ELEC SIGNAL FAILURE	[■] TO OPEN [] STAYPUT [] TO CLOSE	.....
	*VALVE POSN. ON SUPPLY AIR FAILURE	[■] TO OPEN	.....
ACCESSORIES	SMART POSITIONER	[■] REQUIRED [] NOT REQUIRED	.....
	AIR FILTER REGULATOR	[■] REQUIRED [] NOT REQUIRED	.....
	AIR LOCK RELAY	[■] REQUIRED [] NOT REQUIRED	.....
	POSITION LIMIT SWITCH	[■] REQUIRED [] NOT REQUIRED	.....
	POSITION TRANSMITTER	PART OF SMART POSITIONER	.....
	SOLENOID VALVE	[■] REQUIRED [] NOT REQUIRED	.....
	E/P CONVERTER	PART OF SMART POSITIONER	.....
	JUNCTION BOX	[■] REQUIRED [] NOT REQUIRED	.....
	HAND WHEEL (SIDE MOUNTED)	[■] REQUIRED	.....
	LOCAL POSITION INDICATOR	[■] REQUIRED	.....
	ELECTRO PNEUMATIC POSITIONER	[] REQUIRED [■] NOT REQUIRED	.....

Tag No.: DRV-17 / LCH35AA101 & DRV-23 / LCH45AA101

Qty.: 2 nos. (One against each Tag No.)
Date Sheet No. PES-145-06-DS1-0

DATA SHEET – A & B

DATA SHEET – A FOR CONTROL VALVE (WITH PNEUMATIC ACTUATOR) (TO BE FILLED BY PURCHASER)			DATA SHEET – B (TO BE FILLED UP BY BIDDER)
PERFORMANCE OF VALVE	LINEARITY	± 1%	.....
	HYSTERISIS	± 0.5%	.....
	SENSITIVITY	± 0.5%	.....
	ACCURACY (OVERALL)	± 1%	.....

SERVICE CONDITION*

SL. No. +	LOAD	FLOW (T/HR)	INLET PR. KG/CM2(A)	OUTLET PR. KG/CM2(A)	TEMP DEG (C)	CALC ULATED CV	% VLV LIFT	VLV O/L VELOCITY
1.	40% MCR	50.369	23.61	0.3	Saturated			
2.	60% MCR	89.477	35.48	0.3	Saturated			
3.	100% MCR	195.092	58.79	0.3	Saturated			
4.	VWO	215.625	62.9	0.3	Saturated			
5.	BMCR	222.813	62.24	0.5	Saturated			

VALVE TYPE	[] CAVITATION [■] FLASHING [■] HIGH DP
* MAX SHUT OFF PRESS (KG/CM2g) 70 * BODY DESIGN : PRESS (KG/CM2g) | TEMP (DEG C) 70/VACUUM | **280** * IBR FORM III-C [] REQUIRED [■] NOT REQUIRED	....|..... .....
TOTAL WEIGHT (VALVE + ACTUATOR + ACCESSORIES) Kg	.....

NOTES:

Tag No. : DRV-27 / LCH10AA101 & DRV-34 / LCH20AA101
P&ID No.: PE-DG-410-100-N104

Qty.: 2 nos. (One against each Tag No.)
Date Sheet No. PES-145-06-DS1-0

DATA SHEET – A & B

DATA SHEET – A FOR CONTROL VALVE (WITH PNEUMATIC ACTUATOR) (TO BE FILLED BY PURCHASER)			DATA SHEET – B (TO BE FILLED UP BY BIDDER)
GENERAL*	PROJECT	TSGENCO- 1X800 MW KOTHAGUDAM TPS	.....
	SERVICE	HPH-6A/6B NORMAL DRAIN TO DEAERATOR	.....
	LOCATION	[■] INDOOR [] OUTDOOR	.....
	DUTY	[] ON/OFF [■] MODULATING	.....
	PIPE SIZE (inlet / outlet)	273 x 6.35 | 273 x 6.35	.....
	PIPE MATERIAL (inlet / outlet)	SA 106 GR B | SA 106 GR B	.....|.....
BODY*	MODEL NO.		.....
	TYPE OF BODY: GUIDING : NO. OF PORTS	[■] GLOBE [] ANGLE | [] TOP [■] CAGE | ONE	.....|.....|.....|.....
	BODY SIZE: PORT SIZE: DESIGN CV		.....|.....|.....
	END CONNECTION & RATING (ANSI)	[■] BWE [] SWE [] FLANGED	.....
	BODY MATERIAL	[] A216 WCB [■] A217 WC6 [] SS [] A217 CS	.....
		[] A351 CF8M	.....
	PACKING: MATERIAL SINGLE / DOUBLE	[] PTFE [■] GRAFOIL [] DOUBLE [■] SINGLE	.....|.....
	BONNET TYPE	[■] STD [] EXTENDED [] FINNED	.....
	TRIM FORM	[■] LINEAR [] EQ. PERCENTAGE	.....
		[] QUICK OPEN (ON/OFF)	
	TRIM MATERIAL: SEAT | PLUG	17-4 PH SS | 17-4 PH SS	.....|.....
	: CAGE | GUIDE BUSH	17-4 PH SS | 17-4 PH SS	.....|.....
	FLOW	[] BELOW SEAT [] ABOVE SEAT	.....
	OUTLET VELOCITY	[■] < 7 M/SEC (WATER) | [] MAC NO. < 1/3(STM)	.....
	REQUIRED LEAKAGE CLASS	[] II [] III [■] IV [] V [] VI	.....
	NOISE LEVEL (dBA) (spec. 3.1.14)	LESS THAN 85 dBA	.....
	VACUUM SERVICE	[] YES [■] NO	.....
	ANTI CAVITATION TRIM	[] YES [■] NO	.....
PNEUMATIC ACTUATOR	MODEL NO. & SIZE		.....|.....
	CLOSE AT : OPEN AT (KG/CM2g)		.....|.....
	*TRAVEL TIME FOR	< 10 SEC	.....
	OPEN TO CLOSE, CLOSE TO OPEN	|	.....
	*VLV POSN. ON ELEC SIGNAL FAILURE	[] TO OPEN [] STAYPUT [■] TO CLOSE	.....
	*VALVE POSN. ON SUPPLY AIR FAILURE	[■] TO CLOSE	.....
ACCESSORIES	SMART POSITIONER	[■] REQUIRED [] NOT REQUIRED	.....
	AIR FILTER REGULATOR	[■] REQUIRED [] NOT REQUIRED	.....
	AIR LOCK RELAY	[■] REQUIRED [] NOT REQUIRED	.....
	POSITION LIMIT SWITCH	[■] REQUIRED [] NOT REQUIRED	.....
	POSITION TRANSMITTER	PART OF SMART POSITIONER	.....
	SOLENOID VALVE	[■] REQUIRED [] NOT REQUIRED	.....
	E/P CONVERTER	PART OF SMART POSITIONER	.....
	JUNCTION BOX	[■] REQUIRED [] NOT REQUIRED	.....
	HAND WHEEL (SIDE MOUNTED)	[■] REQUIRED	.....
	LOCAL POSITION INDICATOR	[■] REQUIRED	.....
	ELECTRO PNEUMATIC POSITIONER	[] REQUIRED [■] NOT REQUIRED	.....

Tag No. : DRV-27 / LCH10AA101 & DRV-34 / LCH20AA101

Qty.: 2 nos. (One against each Tag No.)
Date Sheet No. PES-145-06-DS1-0

DATA SHEET – A & B

DATA SHEET – A FOR CONTROL VALVE (WITH PNEUMATIC ACTUATOR) (TO BE FILLED BY PURCHASER)			DATA SHEET – B (TO BE FILLED UP BY BIDDER)
PERFORMANCE OF VALVE	LINEARITY	± 1%	.....
	HYSTERISIS	± 0.5%	.....
	SENSITIVITY	± 0.5%	.....
	ACCURACY (OVERALL)	± 1%	.....

SERVICE CONDITION*

SL. No. +	LOAD	FLOW (T/HR)	INLET PR. KG/CM2(A)	OUTLET PR. KG/CM2(A)	TEMP DEG (C)	CALC ULATED CV	% VLV LIFT	VLV O/L VELOCITY
1.	40% MCR	64.695	9.71	6.64	159.3			
2.	60% MCR	115.026	14.33	8.70	173.7			
3.	100% MCR	244.006	23.4	12.7	196.3			
4.	VWO	268.961	25.01	13.39	199.5			
5.	BMCR	278.244	24.58	13.01	198.3			

VALVE TYPE	[] CAVITATION [■] FLASHING [] HIGH DP
* MAX SHUT OFF PRESS (KG/CM2g) 28 * BODY DESIGN : PRESS (KG/CM2g) | TEMP (DEG C) 28 | 210 * IBR FORM III-C [] REQUIRED [■] NOT REQUIRED	....|..... .....
TOTAL WEIGHT (VALVE + ACTUATOR + ACCESSORIES) Kg	.....

NOTES:

Tag No. : DRV-30 / LCH15AA101 & DRV-37 / LCH25AA101
P&ID No.: PE-DG-410-100-N104

Qty.: 2 nos. (One against each Tag No.)
Date Sheet No. PES-145-06-DS1-0

DATA SHEET – A & B

DATA SHEET – A FOR CONTROL VALVE (WITH PNEUMATIC ACTUATOR) (TO BE FILLED BY PURCHASER)			DATA SHEET – B (TO BE FILLED UP BY BIDDER)
GENERAL*	PROJECT	TSGENCO- 1X800 MW KOTHAGUDAM TPS	.....
	SERVICE	HPH-6A/6B ALT. DRAIN TO F/T-A	.....
	LOCATION	[■] INDOOR [] OUTDOOR	.....
	DUTY	[] ON/OFF [■] MODULATING	.....
	PIPE SIZE (inlet / outlet)	273 x 6.35 | 323.9 x 9.53	.....
	PIPE MATERIAL (inlet / outlet)	SA 106 GR B | SA 106 GR B	.....|.....
BODY*	MODEL NO.		.....
	TYPE OF BODY: GUIDING : NO. OF PORTS	[■] GLOBE [] ANGLE | [] TOP [■] CAGE | ONE	.....|.....|.....|.....
	BODY SIZE: PORT SIZE: DESIGN CV		.....|.....|.....
	END CONNECTION & RATING (ANSI)	[■] BWE [] SWE [] FLANGED	.....
	BODY MATERIAL	[] A216 WCB [■] A217 WC9 [] SS [] A217 CS	.....
		[] A351 CF8M	.....
	PACKING: MATERIAL SINGLE / DOUBLE	[] PTFE [■] GRAFOIL [■] DOUBLE [] SINGLE	.....|.....
	BONNET TYPE	[■] STD [] EXTENDED [] FINNED	.....
	TRIM FORM	[■] LINEAR [] EQ. PERCENTAGE	.....
		[] QUICK OPEN (ON/OFF)	
	TRIM MATERIAL: SEAT | PLUG	440C | 440C	.....|.....
	: CAGE | GUIDE BUSH	440C | 440C	.....|.....
	FLOW	[] BELOW SEAT [] ABOVE SEAT	.....
	OUTLET VELOCITY	[■] < 7 M/SEC (WATER) | [] MAC NO. < 1/3(STM)	.....
	REQUIRED LEAKAGE CLASS	[] II [] III [] IV [■] V [] VI	.....
	NOISE LEVEL (dBA) (spec. 3.1.14)	LESS THAN 85 dBA	.....
	VACUUM SERVICE	[■] YES [] NO	.....
	ANTI CAVITATION TRIM	[] YES [■] NO	.....
PNEUMATIC ACTUATOR	MODEL NO. & SIZE		.....|.....
	CLOSE AT : OPEN AT (KG/CM2g)		.....|.....
	*TRAVEL TIME FOR	< 10 SEC	.....
	OPEN TO CLOSE, CLOSE TO OPEN	|	.....
	*VLV POSN. ON ELEC SIGNAL FAILURE	[■] TO OPEN [] STAYPUT [] TO CLOSE	.....
	*VALVE POSN. ON SUPPLY AIR FAILURE	[■] TO OPEN	.....
ACCESSORIES	SMART POSITIONER	[■] REQUIRED [] NOT REQUIRED	.....
	AIR FILTER REGULATOR	[■] REQUIRED [] NOT REQUIRED	.....
	AIR LOCK RELAY	[■] REQUIRED [] NOT REQUIRED	.....
	POSITION LIMIT SWITCH	[■] REQUIRED [] NOT REQUIRED	.....
	POSITION TRANSMITTER	PART OF SMART POSITIONER	.....
	SOLENOID VALVE	[■] REQUIRED [] NOT REQUIRED	.....
	E/P CONVERTER	PART OF SMART POSITIONER	.....
	JUNCTION BOX	[■] REQUIRED [] NOT REQUIRED	.....
	HAND WHEEL (SIDE MOUNTED)	[■] REQUIRED	.....
	LOCAL POSITION INDICATOR	[■] REQUIRED	.....
	ELECTRO PNEUMATIC POSITIONER	[] REQUIRED [■] NOT REQUIRED	.....

Tag No. : DRV-30 / LCH15AA101 & DRV-37 / LCH25AA101

Qty.: 2 nos. (One against each Tag No.)
Date Sheet No. PES-145-06-DS1-0

DATA SHEET – A & B

DATA SHEET – A FOR CONTROL VALVE (WITH PNEUMATIC ACTUATOR) (TO BE FILLED BY PURCHASER)			DATA SHEET – B (TO BE FILLED UP BY BIDDER)
PERFORMANCE OF VALVE	LINEARITY	± 1%	.....
	HYSTERISIS	± 0.5%	.....
	SENSITIVITY	± 0.5%	.....
	ACCURACY (OVERALL)	± 1%	.....

SERVICE CONDITION*

SL. No. +	LOAD	FLOW (T/HR)	INLET PR. KG/CM2(A)	OUTLET PR. KG/CM2(A)	TEMP DEG (C)	CALC ULATED CV	% VLV LIFT	VLV O/L VELOCITY
1.	40% MCR	64.695	9.71	0.3	Saturated			
2.	60% MCR	115.026	14.33	0.3	Saturated			
3.	100% MCR	244.006	23.4	0.3	Saturated			
4.	VWO	268.961	25.01	0.3	Saturated			
5.	BMCR	278.244	24.58	0.5	Saturated			

VALVE TYPE	[] CAVITATION [■] FLASHING [■] HIGH DP
* MAX SHUT OFF PRESS (KG/CM2g) 28 * BODY DESIGN : PRESS (KG/CM2g) | TEMP (DEG C) 28/ VACUUM | **230** * IBR FORM III-C [] REQUIRED [■] NOT REQUIRED	....|..... .....
TOTAL WEIGHT (VALVE + ACTUATOR + ACCESSORIES) Kg	.....

NOTES:

Tag No.: DRV-58 / LCJ31AA101 Qty.: 1 no. Date Sheet No. PES-145-06-DS1-0
P&ID No.: PE-DG-410-100-N104

DATA SHEET – A & B

DATA SHEET – A FOR CONTROL VALVE (WITH PNEUMATIC ACTUATOR) (TO BE FILLED BY PURCHASER)			DATA SHEET – B (TO BE FILLED UP BY BIDDER)
GENERAL*	PROJECT	TSGENCO- 1X800 MW KOTHAGUDAM TPS	.....
	SERVICE	LPH-3 ALT. DRAIN TO F/T-B	.....
	LOCATION	[■] INDOOR [] OUTDOOR	.....
	DUTY	[] ON/OFF [■] MODULATING	.....
	PIPE SIZE (inlet / outlet)	273 x 6.35 | 323.9 x 9.53	.....
	PIPE MATERIAL (inlet / outlet)	SA 106 GR B | SA 106 GR B	.....|.....
BODY*	MODEL NO.		.....
	TYPE OF BODY: GUIDING : NO. OF PORTS	[■] GLOBE [] ANGLE | [] TOP [■] CAGE | ONE	.....|.....|.....|.....
	BODY SIZE: PORT SIZE: DESIGN CV		.....|.....|.....
	END CONNECTION & RATING (ANSI)	[■] BWE [] SWE [] FLANGED	.....
	BODY MATERIAL	[] A216 WCB [■] A217 WC9 [] SS [] A217 CS	.....
		[] A351 CF8M	.....
	PACKING: MATERIAL SINGLE / DOUBLE	[] PTFE [■] GRAFOIL [■] DOUBLE [] SINGLE	.....|.....
	BONNET TYPE	[■] STD [] EXTENDED [] FINNED	.....
	TRIM FORM	[■] LINEAR [] EQ. PERCENTAGE	.....
		[] QUICK OPEN (ON/OFF)	
	TRIM MATERIAL: SEAT | PLUG	17-4 PH SS | 17-4 PH SS	.....|.....
	: CAGE | GUIDE BUSH	17-4 PH SS | 17-4 PH SS	.....|.....
	FLOW	[] BELOW SEAT [] ABOVE SEAT	.....
	OUTLET VELOCITY	[■] < 7 M/SEC (WATER) | [] MAC NO. < 1/3(STM)	.....
	REQUIRED LEAKAGE CLASS	[] II [] III [] IV [■] V [] VI	.....
	NOISE LEVEL (dBA) (spec. 3.1.14)	LESS THAN 85 dBA	.....
	VACUUM SERVICE	[■] YES [] NO	.....
	ANTI CAVITATION TRIM	[] YES [■] NO	.....
PNEUMATIC ACTUATOR	MODEL NO. & SIZE		.....|.....
	CLOSE AT : OPEN AT (KG/CM2g)		.....|.....
	*TRAVEL TIME FOR	< 10 SEC	.....
	OPEN TO CLOSE, CLOSE TO OPEN	|	.....
	*VLV POSN. ON ELEC SIGNAL FAILURE	[■] TO OPEN [] STAYPUT [] TO CLOSE	.....
	*VALVE POSN. ON SUPPLY AIR FAILURE	[■] TO OPEN	.....
ACCESSORIES	SMART POSITIONER	[■] REQUIRED [] NOT REQUIRED	.....
	AIR FILTER REGULATOR	[■] REQUIRED [] NOT REQUIRED	.....
	AIR LOCK RELAY	[■] REQUIRED [] NOT REQUIRED	.....
	POSITION LIMIT SWITCH	[■] REQUIRED [] NOT REQUIRED	.....
	POSITION TRANSMITTER	PART OF SMART POSITIONER	.....
	SOLENOID VALVE	[■] REQUIRED [] NOT REQUIRED	.....
	E/P CONVERTER	PART OF SMART POSITIONER	.....
	JUNCTION BOX	[■] REQUIRED [] NOT REQUIRED	.....
	HAND WHEEL (SIDE MOUNTED)	[■] REQUIRED	.....
	LOCAL POSITION INDICATOR	[■] REQUIRED	.....
	ELECTRO PNEUMATIC POSITIONER	[] REQUIRED [■] NOT REQUIRED	.....

Tag No.: DRV-58 / LCJ31AA101 Qty.: …1 no. Date Sheet No. PES-145-06-DS1-0

DATA SHEET – A & B

DATA SHEET – A FOR CONTROL VALVE (WITH PNEUMATIC ACTUATOR) (TO BE FILLED BY PURCHASER)			DATA SHEET – B (TO BE FILLED UP BY BIDDER)
PERFORMANCE OF VALVE	LINEARITY HYSTERISIS SENSITIVITY ACCURACY (OVERALL)	± 1% ± 0.5% ± 0.5% ± 1%	…… …… …… ……

SERVICE CONDITION*

SL. No. +	LOAD	FLOW (T/HR)	INLET PR. KG/CM2(A)	OUTLET PR. KG/CM2(A)	TEMP DEG (C)	CALC ULATED CV	% VLV LIFT	VLV O/L VELOCITY
1.	40% MCR	67.793	1.24	0.3	Saturated			
2.	60% MCR	107.53	1.73	0.3	Saturated			
3.	100% MCR	199.782	2.68	0.3	Saturated			
4.	VWO	217.144	2.85	0.3	Saturated			
5.	LPH-1/2 & DC-1/2 OUT	280	2.4	0.5	Saturated			

VALVE TYPE	[] CAVITATION [■] FLASHING [■] HIGH DP
* MAX SHUT OFF PRESS (KG/CM2g) 7 * BODY DESIGN : PRESS (KG/CM2g) | TEMP (DEG C) 7/VACUUM | 140 * IBR FORM III-C [] REQUIRED [■] NOT REQUIRED	…… ……|…… ……
TOTAL WEIGHT (VALVE + ACTUATOR + ACCESSORIES) Kg	……

NOTES:

Tag No.: DRV-73 / LAA01AA101 Qty.: 1 no. Date Sheet No. PES-145-06-DS1-0
P&ID No.: PE-DG-410-100-N106

DATA SHEET – A & B

DATA SHEET – A FOR CONTROL VALVE (WITH PNEUMATIC ACTUATOR) (TO BE FILLED BY PURCHASER)			DATA SHEET – B (TO BE FILLED UP BY BIDDER)
GENERAL*	PROJECT	TSGENCO- 1X800 MW KOTHAGUDAM TPS	.....
	SERVICE	DEAERATOR OVERFLOW TO F/T-B	.....
	LOCATION	[■] INDOOR [] OUTDOOR	.....
	DUTY	[■] ON/OFF [] MODULATING	.....
	PIPE SIZE (inlet / outlet)	219.1 x 6.35 | 323.9 x 9.53	.....
	PIPE MATERIAL (inlet / outlet)	SA 106 GR B | SA 106 GR B	.....|.....
BODY*	MODEL NO.		.....
	TYPE OF BODY: GUIDING : NO. OF PORTS	[■] GLOBE [] ANGLE | [] TOP [■] CAGE | ONE	.....|.....|.....|.....
	BODY SIZE: PORT SIZE: DESIGN CV		.....|.....|.....
	END CONNECTION & RATING (ANSI)	[■] BWE [] SWE [] FLANGED	.....
	BODY MATERIAL	[] A216 WCB [■] A217 WC9 [] SS [] A217 CS	.....
		[] A351 CF8M	.....
	PACKING: MATERIAL SINGLE / DOUBLE	[] PTFE [■] GRAFOIL [■] DOUBLE [] SINGLE	.....|.....
	BONNET TYPE	[■] STD [] EXTENDED [] FINNED	.....
	TRIM FORM	[] LINEAR [] EQ. PERCENTAGE	.....
		[■] QUICK OPEN (ON/OFF)	
	TRIM MATERIAL: SEAT | PLUG	17-4 PH SS | 17-4 PH SS	.....|.....
	: CAGE | GUIDE BUSH	17-4 PH SS | 17-4 PH SS	.....|.....
	FLOW	[] BELOW SEAT [] ABOVE SEAT	.....
	OUTLET VELOCITY	[■] < 7 M/SEC (WATER) | [] MAC NO. < 1/3(STM)	.....
	REQUIRED LEAKAGE CLASS	[] II [] III [] IV [■] V [] VI	.....
	NOISE LEVEL (dBA) (spec. 3.1.14)	LESS THAN 85 dBA	.....
	VACUUM SERVICE	[■] YES [] NO	.....
	ANTI CAVITATION TRIM	[] YES [■] NO	.....
PNEUMATIC ACTUATOR	MODEL NO. & SIZE		.....|.....
	CLOSE AT : OPEN AT (KG/CM2g)		.....|.....
	*TRAVEL TIME FOR	< 10 SEC	.....
	OPEN TO CLOSE, CLOSE TO OPEN	|	.....
	*VLV POSN. ON ELEC SIGNAL FAILURE	[■] TO OPEN [] STAYPUT [] TO CLOSE	.....
	*VALVE POSN. ON SUPPLY AIR FAILURE	[■] STAYPUT	.....
ACCESSORIES	SMART POSITIONER	[] REQUIRED [■] NOT REQUIRED	.....
	AIR FILTER REGULATOR	[■] REQUIRED [] NOT REQUIRED	.....
	AIR LOCK RELAY	[■] REQUIRED [] NOT REQUIRED	.....
	POSITION LIMIT SWITCH	[■] REQUIRED [] NOT REQUIRED	.....
	POSITION TRANSMITTER	[] REQUIRED [■] NOT REQUIRED	.....
	SOLENOID VALVE	[■] REQUIRED [] NOT REQUIRED	.....
	E/P CONVERTER	[] REQUIRED [■] NOT REQUIRED	.....
	JUNCTION BOX	[■] REQUIRED [] NOT REQUIRED	.....
	HAND WHEEL (SIDE MOUNTED)	[■] REQUIRED	.....
	LOCAL POSITION INDICATOR	[■] REQUIRED	.....
	ELECTRO PNEUMATIC POSITIONER	[] REQUIRED [■] NOT REQUIRED	.....

Tag No.: DRV-73 / LAA01AA101 Qty.: 1 no. Date Sheet No. PES-145-06-DS1-0

DATA SHEET – A & B

DATA SHEET – A FOR CONTROL VALVE (WITH PNEUMATIC ACTUATOR) (TO BE FILLED BY PURCHASER)			DATA SHEET – B (TO BE FILLED UP BY BIDDER)
PERFORMANCE OF VALVE	LINEARITY HYSTERISIS SENSITIVITY ACCURACY (OVERALL)	± 5% # ± 5% ± 0.5% ± 1%	....

SERVICE CONDITION*

SL. No. +	LOAD	FLOW (T/HR)	INLET PR. KG/CM2(A)	OUTLET PR. KG/CM2(A)	TEMP DEG (C)	CALC ULATED CV	% VLV LIFT	VLV O/L VELOCITY
1.	MAX 10% BMCR	260	12.01	0.3	189.2			

VALVE TYPE	[] CAVITATION [■] FLASHING [] HIGH DP
* MAX SHUT OFF PRESS (KG/CM2g) 15 * BODY DESIGN : PRESS (KG/CM2g) | TEMP (DEG C) 15/ VACUUM | 200 * IBR FORM III-C [] REQUIRED [■] NOT REQUIRED	....|..... .....
TOTAL WEIGHT (VALVE + ACTUATOR + ACCESSORIES) Kg	.....

NOTES:

Tag No.: DRV-2 / LCH50AA101 & DRV-8 / LCH60AA101
P&ID No.: PE-DG-410-100-N104

Qty.: 2 nos. (One against each Tag No.)
Date Sheet No. PES-145-06-DS1-0

DATA SHEET – A & B

DATA SHEET – A FOR CONTROL VALVE (WITH PNEUMATIC ACTUATOR) (TO BE FILLED BY PURCHASER)			DATA SHEET – B (TO BE FILLED UP BY BIDDER)
GENERAL*	PROJECT	TSGENCO- 1X800 MW KOTHAGUDAM TPS	.....
	SERVICE	HPH-8A/8B NORMAL DRAIN TO HPH-7A/7B	.....
	LOCATION	[■] INDOOR [] OUTDOOR	.....
	DUTY	[] ON/OFF [■] MODULATING	.....
	PIPE SIZE (inlet / outlet)	168.3 x 10.97 | 168.3 x 10.97	.....
	PIPE MATERIAL (inlet / outlet)	SA 106 GR B | SA 106 GR B	.....|.....
BODY*	MODEL NO.		.....
	TYPE OF BODY: GUIDING : NO. OF PORTS	[■] GLOBE [] ANGLE | [] TOP [■] CAGE | ONE	.....|.....|.....|.....
	BODY SIZE: PORT SIZE: DESIGN CV		.....|.....|.....
	END CONNECTION & RATING (ANSI)	[■] BWE [] SWE [] FLANGED	.....
	BODY MATERIAL	[] A216 WCB [■] A217 WC6 [] SS [] A217 CS	.....
		[] A351 CF8M	.....
	PACKING: MATERIAL SINGLE / DOUBLE	[] PTFE [■] GRAFOIL [] DOUBLE [■] SINGLE	.....|.....
	BONNET TYPE	[] STD [■] EXTENDED [] FINNED	.....
	TRIM FORM	[■] LINEAR [] EQ. PERCENTAGE	.....
		[] QUICK OPEN (ON/OFF)	
	TRIM MATERIAL: SEAT | PLUG	17-4 PH SS | 17-4 PH SS	.....|.....
	: CAGE | GUIDE BUSH	17-4 PH SS | 17-4 PH SS	.....|.....
	FLOW	[] BELOW SEAT [] ABOVE SEAT	.....
	OUTLET VELOCITY	[■] < 7 M/SEC (WATER) | [] MAC NO. < 1/3(STM)	.....
	REQUIRED LEAKAGE CLASS	[] II [] III [■] IV [] V [] VI	.....
	NOISE LEVEL (dBA) (spec. 3.1.14)	LESS THAN 85 dBA	.....
	VACUUM SERVICE	[] YES [■] NO	.....
	ANTI CAVITATION TRIM	[] YES [■] NO	.....
PNEUMATIC ACTUATOR	MODEL NO. & SIZE		.....|.....
	CLOSE AT : OPEN AT (KG/CM2g)		.....|.....
	*TRAVEL TIME FOR	< 10 SEC	.....
	OPEN TO CLOSE, CLOSE TO OPEN	|	.....
	*VLV POSN. ON ELEC SIGNAL FAILURE	[] TO OPEN [] STAYPUT [■] TO CLOSE	.....
	*VALVE POSN. ON SUPPLY AIR FAILURE	[■] TO CLOSE	.....
ACCESSORIES	SMART POSITIONER	[■] REQUIRED [] NOT REQUIRED	.....
	AIR FILTER REGULATOR	[■] REQUIRED [] NOT REQUIRED	.....
	AIR LOCK RELAY	[■] REQUIRED [] NOT REQUIRED	.....
	POSITION LIMIT SWITCH	[■] REQUIRED [] NOT REQUIRED	.....
	POSITION TRANSMITTER	PART OF SMART POSITIONER	.....
	SOLENOID VALVE	[■] REQUIRED [] NOT REQUIRED	.....
	E/P CONVERTER	PART OF SMART POSITIONER	.....
	JUNCTION BOX	[■] REQUIRED [] NOT REQUIRED	.....
	HAND WHEEL (SIDE MOUNTED)	[■] REQUIRED	.....
	LOCAL POSITION INDICATOR	[■] REQUIRED	.....
	ELECTRO PNEUMATIC POSITIONER	[] REQUIRED [■] NOT REQUIRED	.....

Tag No.: DRV-2 / LCH50AA101 & DRV-8 / LCH60AA101

Qty.: 2 nos. (One against each Tag No.)
Date Sheet No. PES-145-06-DS1-0

DATA SHEET – A & B

DATA SHEET – A FOR CONTROL VALVE (WITH PNEUMATIC ACTUATOR) (TO BE FILLED BY PURCHASER)			DATA SHEET – B (TO BE FILLED UP BY BIDDER)
PERFORMANCE OF VALVE	LINEARITY HYSTERISIS SENSITIVITY ACCURACY (OVERALL)	± 1% ± 0.5% ± 0.5% ± 1%	....

SERVICE CONDITION*

SL. No. +	LOAD	FLOW (T/HR)	INLET PR. KG/CM2(A)	OUTLET PR. KG/CM2(A)	TEMP DEG (C)	CALC ULATED CV	% VLV LIFT	VLV O/L VELOCITY
1.	40% MCR	12.874	32.12	23.61	225.3			
2.	60% MCR	23.873	47.79	35.48	247.5			
3.	100% MCR	56.874	78.5	58.79	278.3			
4.	VWO	63.675	84.38	62.90	283.2			
5.	BMCR	65.902	83.63	62.24	282.5			

VALVE TYPE	[] CAVITATION [■] FLASHING [] HIGH DP
* MAX SHUT OFF PRESS (KG/CM2g) 88 * BODY DESIGN : PRESS (KG/CM2g) | TEMP (DEG C) 88 | **290** * IBR FORM III-C [] REQUIRED [■] NOT REQUIRED	....|..... .....
TOTAL WEIGHT (VALVE + ACTUATOR + ACCESSORIES) Kg	.....

NOTES:

Tag No. : DRV-5 / LCH55AA101 & DRV-11 / LCH65AA101
P&ID No.: PE-DG-410-100-N104

Qty.: 2 nos. (One against each Tag No.)
Date Sheet No. PES-145-06-DS1-0

DATA SHEET – A & B

DATA SHEET – A FOR CONTROL VALVE (WITH PNEUMATIC ACTUATOR) (TO BE FILLED BY PURCHASER)			DATA SHEET – B (TO BE FILLED UP BY BIDDER)
GENERAL*	PROJECT	TSGENCO- 1X800 MW KOTHAGUDAM TPS	.....
	SERVICE	HPH-8A/8B ALT. DRAIN TO F/T-A	.....
	LOCATION	[■] INDOOR [] OUTDOOR	.....
	DUTY	[] ON/OFF [■] MODULATING	.....
	PIPE SIZE (inlet / outlet)	168.3 x 10.97 | 219.1 x 12.7	.....
	PIPE MATERIAL (inlet / outlet)	SA 106 GR B | SA 106 GR B	.....|.....
BODY*	MODEL NO.		.....
	TYPE OF BODY: GUIDING : NO. OF PORTS	[■] GLOBE [] ANGLE | [] TOP [■] CAGE | ONE	.....|.....|.....|.....
	BODY SIZE: PORT SIZE: DESIGN CV		.....|.....|.....
	END CONNECTION & RATING (ANSI)	[■] BWE [] SWE [] FLANGED	.....
	BODY MATERIAL	[] A216 WCB [■] A217 WC9 [] SS [] A217 CS	.....
		[] A351 CF8M	.....
	PACKING: MATERIAL SINGLE / DOUBLE	[] PTFE [■] GRAFOIL [■] DOUBLE [] SINGLE	.....|.....
	BONNET TYPE	[] STD [■] EXTENDED [] FINNED	.....
	TRIM FORM	[■] LINEAR [] EQ. PERCENTAGE	.....
		[] QUICK OPEN (ON/OFF)	
	TRIM MATERIAL: SEAT | PLUG	440C | 440C	.....|.....
	: CAGE | GUIDE BUSH	440C | 440C	.....|.....
	FLOW	[] BELOW SEAT [] ABOVE SEAT	.....
	OUTLET VELOCITY	[■] < 7 M/SEC (WATER) | [] MAC NO. < 1/3(STM)	.....
	REQUIRED LEAKAGE CLASS	[] II [] III [] IV [■] V [] VI	.....
	NOISE LEVEL (dBA) (spec. 3.1.14)	LESS THAN 85 dBA	.....
	VACUUM SERVICE	[■] YES [] NO	.....
	ANTI CAVITATION TRIM	[] YES [■] NO	.....
PNEUMATIC ACTUATOR	MODEL NO. & SIZE		.....|.....
	CLOSE AT : OPEN AT (KG/CM2g)		.....|.....
	*TRAVEL TIME FOR	< 10 SEC	.....
	OPEN TO CLOSE, CLOSE TO OPEN	|	.....
	*VLV POSN. ON ELEC SIGNAL FAILURE	[■] TO OPEN [] STAYPUT [] TO CLOSE	.....
	*VALVE POSN. ON SUPPLY AIR FAILURE	[■] TO OPEN	.....
ACCESSORIES	SMART POSITIONER	[■] REQUIRED [] NOT REQUIRED	.....
	AIR FILTER REGULATOR	[■] REQUIRED [] NOT REQUIRED	.....
	AIR LOCK RELAY	[■] REQUIRED [] NOT REQUIRED	.....
	POSITION LIMIT SWITCH	[■] REQUIRED [] NOT REQUIRED	.....
	POSITION TRANSMITTER	PART OF SMART POSITIONER	.....
	SOLENOID VALVE	[■] REQUIRED [] NOT REQUIRED	.....
	E/P CONVERTER	PART OF SMART POSITIONER	.....
	JUNCTION BOX	[■] REQUIRED [] NOT REQUIRED	.....
	HAND WHEEL (SIDE MOUNTED)	[■] REQUIRED	.....
	LOCAL POSITION INDICATOR	[■] REQUIRED	.....
	ELECTRO PNEUMATIC POSITIONER	[] REQUIRED [■] NOT REQUIRED	.....

Tag No. : DRV-5 / LCH55AA101 & DRV-11 / LCH65AA101

Qty.: 2 nos. (One against each Tag No.)
Date Sheet No. PES-145-06-DS1-0

DATA SHEET – A & B

DATA SHEET – A FOR CONTROL VALVE (WITH PNEUMATIC ACTUATOR) (TO BE FILLED BY PURCHASER)			DATA SHEET – B (TO BE FILLED UP BY BIDDER)
PERFORMANCE OF VALVE	LINEARITY	± 1%	.....
	HYSTERISIS	± 0.5%	.....
	SENSITIVITY	± 0.5%	.....
	ACCURACY (OVERALL)	± 1%	.....

SERVICE CONDITION*

SL. No. +	LOAD	FLOW (T/HR)	INLET PR. KG/CM2(A)	OUTLET PR. KG/CM2(A)	TEMP DEG (C)	CALC ULATED CV	% VLV LIFT	VLV O/L VELOCITY
1.	40% MCR	12.874	32.12	0.3	Saturated			
2.	60% MCR	23.873	47.79	0.3	Saturated			
3.	100% MCR	56.874	78.5	0.3	Saturated			
4.	VWO	63.675	84.38	0.3	Saturated			
5.	BMCR	65.902	83.63	0.5	Saturated			

VALVE TYPE	[] CAVITATION [■] FLASHING [■] HIGH DP
* MAX SHUT OFF PRESS (KG/CM2g) 88 * BODY DESIGN : PRESS (KG/CM2g) | TEMP (DEG C) 88/VACUUM | **300** * IBR FORM III-C [] REQUIRED [■] NOT REQUIRED	....|..... .....
TOTAL WEIGHT (VALVE + ACTUATOR + ACCESSORIES) Kg	.....

NOTES:

Tag No.: DRV-40 / LCJ40AA101 Qty.: 1 no. Date Sheet No. PES-145-06-DS1-0
P&ID No.: PE-DG-410-100-N104

DATA SHEET – A & B

DATA SHEET – A FOR CONTROL VALVE (WITH PNEUMATIC ACTUATOR) (TO BE FILLED BY PURCHASER)			DATA SHEET – B (TO BE FILLED UP BY BIDDER)
GENERAL*	PROJECT	TSGENCO- 1X800 MW KOTHAGUDAM TPS	.....
	SERVICE	LPH-4 NORMAL DRAIN TO LPH-3	.....
	LOCATION	[■] INDOOR [] OUTDOOR	.....
	DUTY	[] ON/OFF [■] MODULATING	.....
	PIPE SIZE (inlet / outlet)	168.3 x 7.11 | 219.1 x 6.35	.....
	PIPE MATERIAL (inlet / outlet)	SA 106 GR B | SA 106 GR B	.....|.....
BODY*	MODEL NO.		.....
	TYPE OF BODY: GUIDING : NO. OF PORTS	[■] GLOBE [] ANGLE | [] TOP [■] CAGE | ONE	.....|.....|.....|.....
	BODY SIZE: PORT SIZE: DESIGN CV		.....|.....|.....
	END CONNECTION & RATING (ANSI)	[■] BWE [] SWE [] FLANGED	.....
	BODY MATERIAL	[] A216 WCB [■] A217 WC6 [] SS [] A217 CS	.....
		[] A351 CF8M	.....
	PACKING: MATERIAL SINGLE / DOUBLE	[] PTFE [■] GRAFOIL [■] DOUBLE [] SINGLE	.....|.....
	BONNET TYPE	[■] STD [] EXTENDED [] FINNED	.....
	TRIM FORM	[■] LINEAR [] EQ. PERCENTAGE	.....
		[] QUICK OPEN (ON/OFF)	
	TRIM MATERIAL: SEAT | PLUG	17-4 PH SS | 17-4 PH SS	.....|.....
	: CAGE | GUIDE BUSH	17-4 PH SS | 17-4 PH SS	.....|.....
	FLOW	[] BELOW SEAT [] ABOVE SEAT	.....
	OUTLET VELOCITY	[■] < 7 M/SEC (WATER) | [] MAC NO. < 1/3(STM)	.....
	REQUIRED LEAKAGE CLASS	[] II [] III [■] IV [] V [] VI	.....
	NOISE LEVEL (dBA) (spec. 3.1.14)	LESS THAN 85 dBA	.....
	VACUUM SERVICE	[■] YES [] NO	.....
	ANTI CAVITATION TRIM	[] YES [■] NO	.....
PNEUMATIC ACTUATOR	MODEL NO. & SIZE		.....|.....
	CLOSE AT : OPEN AT (KG/CM2g)		.....|.....
	*TRAVEL TIME FOR	< 10 SEC	.....
	OPEN TO CLOSE, CLOSE TO OPEN	|	.....
	*VLV POSN. ON ELEC SIGNAL FAILURE	[] TO OPEN [] STAYPUT [■] TO CLOSE	.....
	*VALVE POSN. ON SUPPLY AIR FAILURE	[■] TO CLOSE	.....
ACCESSORIES	SMART POSITIONER	[■] REQUIRED [] NOT REQUIRED	.....
	AIR FILTER REGULATOR	[■] REQUIRED [] NOT REQUIRED	.....
	AIR LOCK RELAY	[■] REQUIRED [] NOT REQUIRED	.....
	POSITION LIMIT SWITCH	[■] REQUIRED [] NOT REQUIRED	.....
	POSITION TRANSMITTER	PART OF SMART POSITIONER	.....
	SOLENOID VALVE	[■] REQUIRED [] NOT REQUIRED	.....
	E/P CONVERTER	PART OF SMART POSITIONER	.....
	JUNCTION BOX	[■] REQUIRED [] NOT REQUIRED	.....
	HAND WHEEL (SIDE MOUNTED)	[■] REQUIRED	.....
	LOCAL POSITION INDICATOR	[■] REQUIRED	.....
	ELECTRO PNEUMATIC POSITIONER	[] REQUIRED [■] NOT REQUIRED	.....

Tag No.: DRV-40 / LCJ40AA101 Qty.: 1 no. Date Sheet No. PES-145-06-DS1-0

DATA SHEET – A & B

DATA SHEET – A FOR CONTROL VALVE (WITH PNEUMATIC ACTUATOR) (TO BE FILLED BY PURCHASER)			DATA SHEET – B (TO BE FILLED UP BY BIDDER)
PERFORMANCE OF VALVE	LINEARITY	± 1%	.....
	HYSTERISIS	± 0.5%	.....
	SENSITIVITY	± 0.5%	.....
	ACCURACY (OVERALL)	± 1%	.....

SERVICE CONDITION*

SL. No. +	LOAD	FLOW (T/HR)	INLET PR. KG/CM2(A)	OUTLET PR. KG/CM2(A)	TEMP DEG (C)	CALC ULATED CV	% VLV LIFT	VLV O/L VELOCITY
1.	40% MCR	22.337	2.31	1.24	106.5			
2.	60% MCR	36.038	3.26	1.73	116.9			
3.	100% MCR	68.626	5.08	2.68	131.4			
4.	VWO	74.835	5.40	2.85	133.5			

VALVE TYPE	[] CAVITATION [■] FLASHING [] HIGH DP
* MAX SHUT OFF PRESS (KG/CM2g) 7 * BODY DESIGN : PRESS (KG/CM2g) | TEMP (DEG C) 7/VACUUM | 140 * IBR FORM III-C [] REQUIRED [■] NOT REQUIRED	....|..... .....
TOTAL WEIGHT (VALVE + ACTUATOR + ACCESSORIES) Kg	.....

NOTES:

Tag No.: DRV-43 / LCJ41AA101 Qty.: 1 no. Date Sheet No. PES-145-06-DS1-0
P&ID No.: PE-DG-410-100-N104

DATA SHEET – A & B

DATA SHEET – A FOR CONTROL VALVE (WITH PNEUMATIC ACTUATOR) (TO BE FILLED BY PURCHASER)			DATA SHEET – B (TO BE FILLED UP BY BIDDER)
GENERAL*	PROJECT	TSGENCO- 1X800 MW KOTHAGUDAM TPS	.....
	SERVICE	LPH-4 ALT. DRAIN TO F/T-B	.....
	LOCATION	[■] INDOOR [] OUTDOOR	.....
	DUTY	[] ON/OFF [■] MODULATING	.....
	PIPE SIZE (inlet / outlet)	168.3 x 7.11 | 219.1 x 6.35	.....
	PIPE MATERIAL (inlet / outlet)	SA 106 GR B | SA 106 GR B	.....|.....
BODY*	MODEL NO.		.....
	TYPE OF BODY: GUIDING : NO. OF PORTS	[■] GLOBE [] ANGLE | [] TOP [■] CAGE | ONE	.....|.....|.....|.....
	BODY SIZE: PORT SIZE: DESIGN CV		.....|.....|.....
	END CONNECTION & RATING (ANSI)	[■] BWE [] SWE [] FLANGED	.....
	BODY MATERIAL	[] A216 WCB [■] A217 WC9 [] SS [] A217 CS	.....
		[] A351 CF8M	.....
	PACKING: MATERIAL SINGLE / DOUBLE	[] PTFE [■] GRAFOIL [■] DOUBLE [] SINGLE	.....|.....
	BONNET TYPE	[■] STD [] EXTENDED [] FINNED	.....
	TRIM FORM	[■] LINEAR [] EQ. PERCENTAGE	.....
		[] QUICK OPEN (ON/OFF)	
	TRIM MATERIAL: SEAT | PLUG	17-4 PH SS | 17-4 PH SS	.....|.....
	: CAGE | GUIDE BUSH	17-4 PH SS | 17-4 PH SS	.....|.....
	FLOW	[] BELOW SEAT [] ABOVE SEAT	.....
	OUTLET VELOCITY	[■] < 7 M/SEC (WATER) | [] MAC NO. < 1/3(STM)	.....
	REQUIRED LEAKAGE CLASS	[] II [] III [] IV [■] V [] VI	.....
	NOISE LEVEL (dBA) (spec. 3.1.14)	LESS THAN 85 dBA	.....
	VACUUM SERVICE	[■] YES [] NO	.....
	ANTI CAVITATION TRIM	[] YES [■] NO	.....
PNEUMATIC ACTUATOR	MODEL NO. & SIZE		.....|.....
	CLOSE AT : OPEN AT (KG/CM2g)		.....|.....
	*TRAVEL TIME FOR	< 10 SEC	.....
	OPEN TO CLOSE, CLOSE TO OPEN	|	.....
	*VLV POSN. ON ELEC SIGNAL FAILURE	[■] TO OPEN [] STAYPUT [] TO CLOSE	.....
	*VALVE POSN. ON SUPPLY AIR FAILURE	[■] TO OPEN	.....
ACCESSORIES	SMART POSITIONER	[■] REQUIRED [] NOT REQUIRED	.....
	AIR FILTER REGULATOR	[■] REQUIRED [] NOT REQUIRED	.....
	AIR LOCK RELAY	[■] REQUIRED [] NOT REQUIRED	.....
	POSITION LIMIT SWITCH	[■] REQUIRED [] NOT REQUIRED	.....
	POSITION TRANSMITTER	PART OF SMART POSITIONER	.....
	SOLENOID VALVE	[■] REQUIRED [] NOT REQUIRED	.....
	E/P CONVERTER	PART OF SMART POSITIONER	.....
	JUNCTION BOX	[■] REQUIRED [] NOT REQUIRED	.....
	HAND WHEEL (SIDE MOUNTED)	[■] REQUIRED	.....
	LOCAL POSITION INDICATOR	[■] REQUIRED	.....
	ELECTRO PNEUMATIC POSITIONER	[] REQUIRED [■] NOT REQUIRED	.....

Tag No.: DRV-43/ LCJ41AA101 Qty.: 1 no. Date Sheet No. PES-145-06-DS1-0

DATA SHEET – A & B

DATA SHEET – A FOR CONTROL VALVE (WITH PNEUMATIC ACTUATOR) (TO BE FILLED BY PURCHASER)			DATA SHEET – B (TO BE FILLED UP BY BIDDER)
PERFORMANCE OF VALVE	LINEARITY HYSTERISIS SENSITIVITY ACCURACY (OVERALL)	± 1% ± 0.5% ± 0.5% ± 1%	....

SERVICE CONDITION*

SL. No. +	LOAD	FLOW (T/HR)	INLET PR. KG/CM2(A)	OUTLET PR. KG/CM2(A)	TEMP DEG (C)	CALC ULATED CV	% VLV LIFT	VLV O/L VELOCITY
1.	40% MCR	22.337	2.31	1.24	Saturated			
2.	60% MCR	36.038	3.26	1.73	Saturated			
3.	100% MCR	68.626	5.08	2.68	Saturated			
4.	VWO	74.835	5.40	2.85	Saturated			
5.	LPH-3 OUT	150	4	0.3	Saturated			

VALVE TYPE	[] CAVITATION [■] FLASHING [] HIGH DP
* MAX SHUT OFF PRESS (KG/CM2g) 7 * BODY DESIGN : PRESS (KG/CM2g) | TEMP (DEG C) 7/VACUUM | **160** * IBR FORM III-C [] REQUIRED [■] NOT REQUIRED	....|..... .....
TOTAL WEIGHT (VALVE + ACTUATOR + ACCESSORIES) Kg	.....

NOTES:

Tag No.: DMV-2 / LCR81AA101 Qty.: 1 no. Date Sheet No. PES-145-06-DS1-0
P&ID No.: PE-DG-410-100-N106

DATA SHEET – A & B

DATA SHEET – A FOR CONTROL VALVE (WITH PNEUMATIC ACTUATOR) (TO BE FILLED BY PURCHASER)			DATA SHEET – B (TO BE FILLED UP BY BIDDER)
GENERAL*	PROJECT	TSGENCO- 1X800 MW KOTHAGUDAM TPS	.....
	SERVICE	DM NORMAL MU TO HOTWELL	.....
	LOCATION	[■] INDOOR [] OUTDOOR	.....
	DUTY	[] ON/OFF [■] MODULATING	.....
	PIPE SIZE (inlet / outlet)	88.9 x 3.05 | 88.9 x 3.05	.....
	PIPE MATERIAL (inlet / outlet)	SA 312 TP 304 (ERW) | SA 312 TP 304 (ERW)	.....|.....
BODY*	MODEL NO.		.....
	TYPE OF BODY: GUIDING : NO. OF PORTS	[■] GLOBE [] ANGLE | [] TOP [■] CAGE | ONE	.....|.....|.....|.....
	BODY SIZE: PORT SIZE: DESIGN CV		.....|.....|.....
	END CONNECTION & RATING (ANSI)	[■] BWE [] SWE [] FLANGED	.....
	BODY MATERIAL	[] A216 WCB [] A217 WC6 [] SS [] A217 CS	.....
		[■] A351 CF8M	.....
	PACKING: MATERIAL SINGLE / DOUBLE	[] PTFE [■] GRAFOIL [■] DOUBLE [] SINGLE	.....|.....
	BONNET TYPE	[■] STD [] EXTENDED [] FINNED	.....
	TRIM FORM	[] LINEAR [■] EQ. PERCENTAGE	.....
		[] QUICK OPEN (ON/OFF)	
	TRIM MATERIAL: SEAT | PLUG	SS 316 STELLITED | SS 316 STELLITED	.....|.....
	: CAGE | GUIDE BUSH	SS 316 STELLITED | SS 316 STELLITED	.....|.....
	FLOW	[] BELOW SEAT [] ABOVE SEAT	.....
	OUTLET VELOCITY	[■] < 7 M/SEC (WATER) | [] MAC NO. < 1/3(STM)	.....
	REQUIRED LEAKAGE CLASS	[] II [] III [] IV [■] V [] VI	.....
	NOISE LEVEL (dBA) (spec. 3.1.14)	LESS THAN 85 dBA	.....
	VACUUM SERVICE	[■] YES [] NO	.....
	ANTI CAVITATION TRIM	[■] YES [] NO	.....
PNEUMATIC ACTUATOR	MODEL NO. & SIZE		.....|.....
	CLOSE AT : OPEN AT (KG/CM2g)		.....|.....
	*TRAVEL TIME FOR	< 10 SEC	.....
	OPEN TO CLOSE, CLOSE TO OPEN	|	.....
	*VLV POSN. ON ELEC SIGNAL FAILURE	[■] TO OPEN [] STAYPUT [] TO CLOSE	.....
	*VALVE POSN. ON SUPPLY AIR FAILURE	[■] STAYPUT	.....
ACCESSORIES	SMART POSITIONER	[■] REQUIRED [] NOT REQUIRED	.....
	AIR FILTER REGULATOR	[■] REQUIRED [] NOT REQUIRED	.....
	AIR LOCK RELAY	[■] REQUIRED [] NOT REQUIRED	.....
	POSITION LIMIT SWITCH	[■] REQUIRED [] NOT REQUIRED	.....
	POSITION TRANSMITTER	PART OF SMART POSITIONER	.....
	SOLENOID VALVE	[■] REQUIRED [] NOT REQUIRED	.....
	E/P CONVERTER	PART OF SMART POSITIONER	.....
	JUNCTION BOX	[■] REQUIRED [] NOT REQUIRED	.....
	HAND WHEEL (SIDE MOUNTED)	[■] REQUIRED	.....
	LOCAL POSITION INDICATOR	[■] REQUIRED	.....
	ELECTRO PNEUMATIC POSITIONER	[] REQUIRED [■] NOT REQUIRED	.....

Tag No.: DMV-2 / LCR81AA101 Qty.: 1 no. Date Sheet No. PES-145-06-DS1-0

DATA SHEET – A & B

DATA SHEET – A FOR CONTROL VALVE (WITH PNEUMATIC ACTUATOR) (TO BE FILLED BY PURCHASER)			DATA SHEET – B (TO BE FILLED UP BY BIDDER)
PERFORMANCE OF VALVE	LINEARITY HYSTERISIS SENSITIVITY ACCURACY (OVERALL)	± 1% ± 0.5% ± 0.5% ± 1%	....

SERVICE CONDITION*

SL. No. +	LOAD	FLOW (T/HR)	INLET PR. KG/CM2(A)	OUTLET PR. KG/CM2(A)	TEMP DEG (C)	CALC ULATED CV	% VLV LIFT	VLV O/L VELOCITY
1.	MIN. (0.5% MU)	13	4	0.5	33			
2.	NORMAL (1% MU)	26	3.5	0.5	33			
3.	HW MU PUMP DESIGN FLOW	75	2.5	0.6	33			
4.	2% MU	52	3	0.5	33			

VALVE TYPE	[■] CAVITATION [] FLASHING [] HIGH DP
* MAX SHUT OFF PRESS (KG/CM2g) 10 * BODY DESIGN : PRESS (KG/CM2g) | TEMP (DEG C) 10/VACUUM | 55 * IBR FORM III-C [] REQUIRED [■] NOT REQUIRED	....|..... .....
TOTAL WEIGHT (VALVE + ACTUATOR + ACCESSORIES) Kg	.....

NOTES: ANTI CAVITATION TRIM SHALL BE PROVIDED

Tag No.: DMV-5 / LCR83AA101 Qty.: 1 no. Date Sheet No. PES-145-06-DS1-0
P&ID No.: PE-DG-410-100-N106

DATA SHEET – A & B

DATA SHEET – A FOR CONTROL VALVE (WITH PNEUMATIC ACTUATOR) (TO BE FILLED BY PURCHASER)			DATA SHEET – B (TO BE FILLED UP BY BIDDER)
GENERAL*	PROJECT	TSGENCO- 1X800 MW KOTHAGUDAM TPS	.....
	SERVICE	DM EMERGENCY MU TO HOTWELL	.....
	LOCATION	[■] INDOOR [] OUTDOOR	.....
	DUTY	[] ON/OFF [■] MODULATING	.....
	PIPE SIZE (inlet / outlet)	114.3 x 3.05 | 114.3 x 3.05	.....
	PIPE MATERIAL (inlet / outlet)	SA 312 TP 304 (ERW) | SA 312 TP 304 (ERW)	.....|.....
BODY*	MODEL NO.		.....
	TYPE OF BODY: GUIDING : NO. OF PORTS	[■] GLOBE [] ANGLE | [] TOP [■] CAGE | ONE	.....|.....|.....|.....
	BODY SIZE: PORT SIZE: DESIGN CV		.....|.....|.....
	END CONNECTION & RATING (ANSI)	[■] BWE [] SWE [] FLANGED	.....
	BODY MATERIAL	[] A216 WCB [] A217 WC6 [] SS [] A217 CS	.....
		[■] A351 CF8M	.....
	PACKING: MATERIAL SINGLE / DOUBLE	[] PTFE [■] GRAFOIL [■] DOUBLE [] SINGLE	.....|.....
	BONNET TYPE	[■] STD [] EXTENDED [] FINNED	.....
	TRIM FORM	[] LINEAR [■] EQ. PERCENTAGE	.....
		[] QUICK OPEN (ON/OFF)	
	TRIM MATERIAL: SEAT | PLUG	SS 316 STELLITED | SS 316 STELLITED	.....|.....
	: CAGE | GUIDE BUSH	SS 316 STELLITED | SS 316 STELLITED	.....|.....
	FLOW	[] BELOW SEAT [] ABOVE SEAT	.....
	OUTLET VELOCITY	[■] < 7 M/SEC (WATER) | [] MAC NO. < 1/3(STM)	.....
	REQUIRED LEAKAGE CLASS	[] II [] III [] IV [■] V [] VI	.....
	NOISE LEVEL (dBA) (spec. 3.1.14)	LESS THAN 85 dBA	.....
	VACUUM SERVICE	[■] YES [] NO	.....
	ANTI CAVITATION TRIM	[■] YES [] NO	.....
PNEUMATIC ACTUATOR	MODEL NO. & SIZE		.....|.....
	CLOSE AT : OPEN AT (KG/CM2g)		.....|.....
	*TRAVEL TIME FOR	< 10 SEC	.....
	OPEN TO CLOSE, CLOSE TO OPEN	|	.....
	*VLV POSN. ON ELEC SIGNAL FAILURE	[] TO OPEN [■] STAYPUT [] TO CLOSE	.....
	*VALVE POSN. ON SUPPLY AIR FAILURE	[■] STAYPUT	.....
ACCESSORIES	SMART POSITIONER	[■] REQUIRED [] NOT REQUIRED	.....
	AIR FILTER REGULATOR	[■] REQUIRED [] NOT REQUIRED	.....
	AIR LOCK RELAY	[■] REQUIRED [] NOT REQUIRED	.....
	POSITION LIMIT SWITCH	[■] REQUIRED [] NOT REQUIRED	.....
	POSITION TRANSMITTER	PART OF SMART POSITIONER	.....
	SOLENOID VALVE	[■] REQUIRED [] NOT REQUIRED	.....
	E/P CONVERTER	PART OF SMART POSITIONER	.....
	JUNCTION BOX	[■] REQUIRED [] NOT REQUIRED	.....
	HAND WHEEL (SIDE MOUNTED)	[■] REQUIRED	.....
	LOCAL POSITION INDICATOR	[■] REQUIRED	.....
	ELECTRO PNEUMATIC POSITIONER	[] REQUIRED [■] NOT REQUIRED	.....

Tag No.: DMV-5 / LCR83AA101 Qty.: 1 no. Date Sheet No. PES-145-06-DS1-0

DATA SHEET – A & B

DATA SHEET – A FOR CONTROL VALVE (WITH PNEUMATIC ACTUATOR) (TO BE FILLED BY PURCHASER)			DATA SHEET – B (TO BE FILLED UP BY BIDDER)
PERFORMANCE OF VALVE	LINEARITY HYSTERISIS SENSITIVITY ACCURACY (OVERALL)	± 1% ± 0.5% ± 0.5% ± 1%	....

SERVICE CONDITION*

SL. No. +	LOAD	FLOW (T/HR)	INLET PR. KG/CM2(A)	OUTLET PR. KG/CM2(A)	TEMP DEG (C)	CALC ULATED CV	% VLV LIFT	VLV O/L VELOCITY
1.	MIN. (1% MU)	26	4	0.45	33			
2.	MAX. (5% MU)	130	3	0.5	33			

VALVE TYPE		[■] CAVITATION [] FLASHING [] HIGH DP
* MAX SHUT OFF PRESS (KG/CM2g) * BODY DESIGN : PRESS (KG/CM2g) | TEMP (DEG C) * IBR FORM III-C	7 7/VACUUM | 55 [] REQUIRED [■] NOT REQUIRED	....|..... .....
TOTAL WEIGHT (VALVE + ACTUATOR + ACCESSORIES) Kg		.....

NOTES: ANTI CAVITATION TRIM SHALL BE PROVIDED

Tag No.: FDV-8 / LAB50AA101 Qty.: 1 no. Date Sheet No. PES-145-06-DS1-0
P&ID No.: PE-DG-410-100-N105

DATA SHEET – A & B

DATA SHEET – A FOR CONTROL VALVE (WITH PNEUMATIC ACTUATOR) (TO BE FILLED BY PURCHASER)			DATA SHEET – B (TO BE FILLED UP BY BIDDER)
GENERAL*	PROJECT	TSGENCO- 1X800 MW KOTHAGUDAM TPS	.....
	SERVICE	LOW LOAD FEED CONTROL	.....
	LOCATION	[■] INDOOR [] OUTDOOR	.....
	DUTY	[] ON/OFF [■] MODULATING	.....
	PIPE SIZE (inlet / outlet)	406.4 x 70 | 406.4 x 70	.....
	PIPE MATERIAL (inlet / outlet)	SA 106 GR C | SA 106 GR C	.....|.....
BODY*	MODEL NO.		.....
	TYPE OF BODY: GUIDING : NO. OF PORTS	[■] GLOBE [] ANGLE | [] TOP [■] CAGE | ONE	.....|.....|.....|.....
	BODY SIZE: PORT SIZE: DESIGN CV		.....|.....|.....
	END CONNECTION & RATING (ANSI)	[■] BWE [] SWE [] FLANGED	.....
	BODY MATERIAL	[] A216 WCB [■] A217 WC9 [] SS [] A217 CS	.....
		[] A351 CF8M	.....
	PACKING: MATERIAL SINGLE / DOUBLE	[] PTFE [■] GRAFOIL [] DOUBLE [■] SINGLE	.....|.....
	BONNET TYPE	[■] STD [] EXTENDED [] FINNED	.....
	TRIM FORM	[] LINEAR [■] EQ. PERCENTAGE **(MULTI STAGE & MULTI PATH)** [] QUICK OPEN	.....
	TRIM MATERIAL: SEAT | PLUG	440C | 440C	.....|.....
	: CAGE | GUIDE BUSH	440C | 440C	.....|.....
	FLOW	[] BELOW SEAT [] ABOVE SEAT	.....
	OUTLET VELOCITY	[■] < 7 M/SEC (WATER) | [] MAC NO. < 1/3(STM)	.....
	REQUIRED LEAKAGE CLASS	[] II [] III [] IV [■] V [] VI	.....
	NOISE LEVEL (dBA) (spec. 3.1.14)	LESS THAN 85 dBA	.....
	VACUUM SERVICE	[] YES [■] NO	.....
	ANTI CAVITATION TRIM	[■] YES [] NO	.....
PNEUMATIC ACTUATOR	MODEL NO. & SIZE		.....|.....
	CLOSE AT : OPEN AT (KG/CM2g)		.....|.....
	*TRAVEL TIME FOR	< 10 SEC	.....
	OPEN TO CLOSE, CLOSE TO OPEN	|	.....
	*VLV POSN. ON ELEC SIGNAL FAILURE	[■] TO OPEN [] STAYPUT [] TO CLOSE	.....
	*VALVE POSN. ON SUPPLY AIR FAILURE	[■] STAYPUT	.....
ACCESSORIES	SMART POSITIONER	[■] REQUIRED [] NOT REQUIRED	.....
	AIR FILTER REGULATOR	[■] REQUIRED [] NOT REQUIRED	.....
	AIR LOCK RELAY	[■] REQUIRED [] NOT REQUIRED	.....
	POSITION LIMIT SWITCH	[■] REQUIRED [] NOT REQUIRED	.....
	POSITION TRANSMITTER	PART OF SMART POSITIONER	.....
	SOLENOID VALVE	[■] REQUIRED [] NOT REQUIRED	.....
	E/P CONVERTER	PART OF SMART POSITIONER	.....
	JUNCTION BOX	[■] REQUIRED [] NOT REQUIRED	.....
	HAND WHEEL (SIDE MOUNTED)	[■] REQUIRED	.....
	LOCAL POSITION INDICATOR	[■] REQUIRED	.....
	ELECTRO PNEUMATIC POSITIONER	[] REQUIRED [■] NOT REQUIRED	.....

Tag No.: FDV-8/ LAB50AA101 Qty.: 1 no. Date Sheet No. PES-145-06-DS1-0

DATA SHEET – A & B

DATA SHEET – A FOR CONTROL VALVE (WITH PNEUMATIC ACTUATOR) (TO BE FILLED BY PURCHASER)			DATA SHEET – B (TO BE FILLED UP BY BIDDER)
PERFORMANCE OF VALVE	LINEARITY HYSTERISIS SENSITIVITY ACCURACY (OVERALL)	± 1% ± 0.5% ± 0.5% ± 1%	....

SERVICE CONDITION*

SL. No. +	LOAD	FLOW (T/HR)	INLET PR. KG/CM2(A)	OUTLET PR. KG/CM2(A)	TEMP DEG (C)	CALC ULATED CV	% VLV LIFT	VLV O/L VELOCITY
1.	5% MCR (MIN.SPEED)	130	167	21	111			
2.	15% MCR	390	165	32	111			
3.	30% MCR	780	155	115	111 TO 138			
4.	40% MCR	880	185	148	157			
5.	40% Boiler Min R/c	1034	143	20	111			

VALVE TYPE	[■] CAVITATION [] FLASHING [■] HIGH DP
* MAX SHUT OFF PRESS (KG/CM2g) 450 * BODY DESIGN : PRESS (KG/CM2g) | TEMP (DEG C) 450 | 200 * IBR FORM III-C [■] REQUIRED [] NOT REQUIRED	....|..... .....
TOTAL WEIGHT (VALVE + ACTUATOR + ACCESSORIES) Kg	.....

NOTES:

Tag No.: DRV-52 / LCA83AA101 Qty.: …1 no. Date Sheet No. PES-145-06-DS1-0
P&ID No.: PE-DG-410-100-N106

DATA SHEET – A & B

DATA SHEET – A FOR CONTROL VALVE (WITH PNEUMATIC ACTUATOR) (TO BE FILLED BY PURCHASER)			DATA SHEET – B (TO BE FILLED UP BY BIDDER)
GENERAL*	PROJECT	TSGENCO- 1X800 MW KOTHAGUDAM TPS	.....
	SERVICE	DRIP PUMP DISCHARGE CONTROL	.....
	LOCATION	[■] INDOOR [] OUTDOOR	.....
	DUTY	[] ON/OFF [■] MODULATING	.....
	PIPE SIZE (inlet / outlet)	219x 8.18 | 219x 8.18	.....
	PIPE MATERIAL (inlet / outlet)	SA 106 GR B | SA 106 GR B	.....|.....
BODY*	MODEL NO.		.....
	TYPE OF BODY: GUIDING : NO. OF PORTS	[■] GLOBE [] ANGLE | [] TOP [■] CAGE | ONE	.....|.....|.....|.....
	BODY SIZE: PORT SIZE: DESIGN CV		.....|.....|.....
	END CONNECTION & RATING (ANSI)	[■] BWE [] SWE [] FLANGED	.....
	BODY MATERIAL	[■] A216 WCB [] A217 WC9 [] SS [] A217 CS	.....
		[] A351 CF8M	.....
	PACKING: MATERIAL SINGLE / DOUBLE	[] PTFE [■] GRAFOIL [■] DOUBLE [] SINGLE	.....|.....
	BONNET TYPE	[■] STD [] EXTENDED [] FINNED	.....
	TRIM FORM	[] LINEAR [■] EQ. PERCENTAGE	.....
		[] QUICK OPEN (ON/OFF)	
	TRIM MATERIAL: SEAT | PLUG	SS 316 STELLITED | SS 316 STELLITED	.....|.....
	: CAGE | GUIDE BUSH	SS 316 STELLITED | SS 316 STELLITED	.....|.....
	FLOW	[] BELOW SEAT [] ABOVE SEAT	.....
	OUTLET VELOCITY	[■] < 7 M/SEC (WATER) | [] MAC NO. < 1/3(STM)	.....
	REQUIRED LEAKAGE CLASS	[] II [] III [■] IV [] V [] VI	.....
	NOISE LEVEL (dBA) (spec. 3.1.14)	LESS THAN 85 dBA	.....
	VACUUM SERVICE	[] YES [■] NO	.....
	ANTI CAVITATION TRIM	[] YES [■] NO	.....
PNEUMATIC ACTUATOR	MODEL NO. & SIZE		.....|.....
	CLOSE AT : OPEN AT (KG/CM2g)		.....|.....
	*TRAVEL TIME FOR	< 10 SEC	.....
	OPEN TO CLOSE, CLOSE TO OPEN	|	.....
	*VLV POSN. ON ELEC SIGNAL FAILURE	[] TO OPEN [] STAYPUT [■] TO CLOSE	.....
	*VALVE POSN. ON SUPPLY AIR FAILURE	[■] STAYPUT	.....
ACCESSORIES	SMART POSITIONER	[■] REQUIRED [] NOT REQUIRED	.....
	AIR FILTER REGULATOR	[■] REQUIRED [] NOT REQUIRED	.....
	AIR LOCK RELAY	[■] REQUIRED [] NOT REQUIRED	.....
	POSITION LIMIT SWITCH	[■] REQUIRED [] NOT REQUIRED	.....
	POSITION TRANSMITTER	PART OF SMART POSITIONER	.....
	SOLENOID VALVE	[■] REQUIRED [] NOT REQUIRED	.....
	E/P CONVERTER	PART OF SMART POSITIONER	.....
	JUNCTION BOX	[■] REQUIRED [] NOT REQUIRED	.....
	HAND WHEEL (SIDE MOUNTED)	[■] REQUIRED	.....
	LOCAL POSITION INDICATOR	[■] REQUIRED	.....
	ELECTRO PNEUMATIC POSITIONER	[] REQUIRED [■] NOT REQUIRED	.....

Tag No.: DRV-52 / LCA83AA101 Qty.: 1 no. Date Sheet No. PES-145-06-DS1-0

DATA SHEET – A & B

DATA SHEET – A FOR CONTROL VALVE (WITH PNEUMATIC ACTUATOR) (TO BE FILLED BY PURCHASER)			DATA SHEET – B (TO BE FILLED UP BY BIDDER)
PERFORMANCE OF VALVE	LINEARITY HYSTERISIS SENSITIVITY ACCURACY (OVERALL)	± 1% ± 0.5% ± 0.5% ± 1%	....

SERVICE CONDITION*	SL. No. +	LOAD	FLOW (T/HR)	INLET PR. KG/CM2(A)	OUTLET PR. KG/CM2(A)	TEMP DEG (C)	CALC ULATED CV	% VLV LIFT	VLV O/L VELOCITY
	1.	40% MCR	67.793	27	12	105.1			
	2.	60% MCR	107.53	26	15	115.2			
	3.	100% MCR	199.782	25	20.5	129.3			
	4.	VWO	217.144	24.5	21.5	131.3			
	5.	PUMP DESIGN	250	24	21.5	132			
	6.	LPH-1&2, DC-1&2 BYPASS	286.5	22.5	20.5	125.5			

	VALVE TYPE	[] CAVITATION [] FLASHING [] HIGH DP
	* MAX SHUT OFF PRESS (KG/CM2g) 30 * BODY DESIGN : PRESS (KG/CM2g) | TEMP (DEG C) 47/VACUUM | 140 * IBR FORM III-C [] REQUIRED [■] NOT REQUIRED	....|..... .....
	TOTAL WEIGHT (VALVE + ACTUATOR + ACCESSORIES) Kg	.....

NOTES:

Tag No.: DRV-78 / LCJ23AA101 Qty.: 1 no. Date Sheet No. PES-145-06-DS1-0
P&ID No.: PE-DG-410-100-N104

DATA SHEET – A & B

DATA SHEET – A FOR CONTROL VALVE (WITH PNEUMATIC ACTUATOR) (TO BE FILLED BY PURCHASER)			DATA SHEET – B (TO BE FILLED UP BY BIDDER)
GENERAL*	PROJECT	TSGENCO- 1X800 MW KOTHAGUDAM TPS	.....
	SERVICE	LPH-2A&2B NORMAL DRAIN TO DC-1	.....
	LOCATION	[■] INDOOR [] OUTDOOR	.....
	DUTY	[] ON/OFF [■] MODULATING	.....
	PIPE SIZE (inlet / outlet)	219.1 x 6.35 | 219.1 x 6.35	.....
	PIPE MATERIAL (inlet / outlet)	SA 106 GR B | SA 106 GR B	.....|.....
BODY*	MODEL NO.		.....
	TYPE OF BODY: GUIDING : NO. OF PORTS	[■] GLOBE [] ANGLE | [] TOP [■] CAGE | ONE	.....|.....|.....|.....
	BODY SIZE: PORT SIZE: DESIGN CV		.....|.....|.....
	END CONNECTION & RATING (ANSI)	[■] BWE [] SWE [] FLANGED	.....
	BODY MATERIAL	[] A216 WCB [■] A217 WC6 [] SS [] A217 CS	.....
		[] A351 CF8M	.....
	PACKING: MATERIAL SINGLE / DOUBLE	[] PTFE [■] GRAFOIL [■] DOUBLE [] SINGLE	.....|.....
	BONNET TYPE	[■] STD [] EXTENDED [] FINNED	.....
	TRIM FORM	[■] LINEAR [] EQ. PERCENTAGE	.....
		[] QUICK OPEN (ON/OFF)	
	TRIM MATERIAL: SEAT | PLUG	17-4 PH SS | 17-4 PH SS	.....|.....
	: CAGE | GUIDE BUSH	17-4 PH SS | 17-4 PH SS	.....|.....
	FLOW	[] BELOW SEAT [] ABOVE SEAT	.....
	OUTLET VELOCITY	[■] < 7 M/SEC (WATER) | [] MAC NO. < 1/3(STM)	.....
	REQUIRED LEAKAGE CLASS	[] II [] III [] IV [■] V [] VI	.....
	NOISE LEVEL (dBA) (spec. 3.1.14)	LESS THAN 85 dBA	.....
	VACUUM SERVICE	[■] YES [] NO	.....
	ANTI CAVITATION TRIM	[] YES [■] NO	.....
PNEUMATIC ACTUATOR	MODEL NO. & SIZE		.....|.....
	CLOSE AT : OPEN AT (KG/CM2g)		.....|.....
	*TRAVEL TIME FOR	< 10 SEC	.....
	OPEN TO CLOSE, CLOSE TO OPEN	|	.....
	*VLV POSN. ON ELEC SIGNAL FAILURE	[] TO OPEN [] STAYPUT [■] TO CLOSE	.....
	*VALVE POSN. ON SUPPLY AIR FAILURE	[■] TO CLOSE	.....
ACCESSORIES	SMART POSITIONER	[■] REQUIRED [] NOT REQUIRED	.....
	AIR FILTER REGULATOR	[■] REQUIRED [] NOT REQUIRED	.....
	AIR LOCK RELAY	[■] REQUIRED [] NOT REQUIRED	.....
	POSITION LIMIT SWITCH	[■] REQUIRED [] NOT REQUIRED	.....
	POSITION TRANSMITTER	PART OF SMART POSITIONER	.....
	SOLENOID VALVE	[■] REQUIRED [] NOT REQUIRED	.....
	E/P CONVERTER	PART OF SMART POSITIONER	.....
	JUNCTION BOX	[■] REQUIRED [] NOT REQUIRED	.....
	HAND WHEEL (SIDE MOUNTED)	[■] REQUIRED	.....
	LOCAL POSITION INDICATOR	[■] REQUIRED	.....
	ELECTRO PNEUMATIC POSITIONER	[] REQUIRED [■] NOT REQUIRED	.....

Tag No.: DRV-78 / LCJ23AA101 Qty.: 1 no. Date Sheet No. PES-145-06-DS1-0

DATA SHEET – A & B

DATA SHEET – A FOR CONTROL VALVE (WITH PNEUMATIC ACTUATOR) (TO BE FILLED BY PURCHASER)			DATA SHEET – B (TO BE FILLED UP BY BIDDER)
PERFORMANCE OF VALVE	LINEARITY HYSTERISIS SENSITIVITY ACCURACY (OVERALL)	± 1% ± 0.5% ± 0.5% ± 1%	....

SERVICE CONDITION*

SL. No. +	LOAD	FLOW (T/HR)	INLET PR. KG/CM2(A)	OUTLET PR. KG/CM2(A)	TEMP DEG (C)	CALC ULATED CV	% VLV LIFT	VLV O/L VELOCITY
1.	40% MCR	16.933	0.2454	0.1205	64.1			
2.	60% MCR	27.856	0.3453	0.1638	71.9			
3.	100% MCR	53.498	0.5346	0.2439	82.5			
4.	VWO	58.309	0.5671	0.2576	84.0			
5	Max	62	0.8	0.35	96.1			

VALVE TYPE	[] CAVITATION [■] FLASHING [] HIGH DP
* MAX SHUT OFF PRESS (KG/CM2g) 7 * BODY DESIGN : PRESS (KG/CM2g) | TEMP (DEG C) 7/VACUUM | 100 * IBR FORM III-C [] REQUIRED [■] NOT REQUIRED	....|..... .....
TOTAL WEIGHT (VALVE + ACTUATOR + ACCESSORIES) Kg	.....

NOTES:

Tag No.: DRV-81 / LCJ24AA101 Qty.: 1 no. Date Sheet No. PES-145-06-DS1-0
P&ID No.: PE-DG-410-100-N104

DATA SHEET – A & B

DATA SHEET – A FOR CONTROL VALVE (WITH PNEUMATIC ACTUATOR) (TO BE FILLED BY PURCHASER)			DATA SHEET – B (TO BE FILLED UP BY BIDDER)
GENERAL*	PROJECT	TSGENCO- 1X800 MW KOTHAGUDAM TPS	.....
	SERVICE	LPH-2A&2B ALT. DRAIN TO F/T-B	.....
	LOCATION	[■] INDOOR [] OUTDOOR	.....
	DUTY	[] ON/OFF [■] MODULATING	.....
	PIPE SIZE (inlet / outlet)	219.1 x 8.18 | 219.1 x 8.18	.....
	PIPE MATERIAL (inlet / outlet)	SA 106 GR B | SA 106 GR B	.....|.....
BODY*	MODEL NO.		.....
	TYPE OF BODY: GUIDING : NO. OF PORTS	[■] GLOBE [] ANGLE | [] TOP [■] CAGE | ONE	.....|.....|.....|.....
	BODY SIZE: PORT SIZE: DESIGN CV		.....|.....|.....
	END CONNECTION & RATING (ANSI)	[■] BWE [] SWE [] FLANGED	.....
	BODY MATERIAL	[] A216 WCB [■] A217 WC6 [] SS [] A217 CS	.....
		[] A351 CF8M	.....
	PACKING: MATERIAL SINGLE / DOUBLE	[] PTFE [■] GRAFOIL [■] DOUBLE [] SINGLE	.....|.....
	BONNET TYPE	[■] STD [] EXTENDED [] FINNED	.....
	TRIM FORM	[■] LINEAR [] EQ. PERCENTAGE	.....
		[] QUICK OPEN (ON/OFF)	
	TRIM MATERIAL: SEAT | PLUG	17-4 PH SS | 17-4 PH SS	.....|.....
	: CAGE | GUIDE BUSH	17-4 PH SS | 17-4 PH SS	.....|.....
	FLOW	[] BELOW SEAT [] ABOVE SEAT	.....
	OUTLET VELOCITY	[■] < 7 M/SEC (WATER) | [] MAC NO. < 1/3(STM)	.....
	REQUIRED LEAKAGE CLASS	[] II [] III [] IV [■] V [] VI	.....
	NOISE LEVEL (dBA) (spec. 3.1.14)	LESS THAN 85 dBA	.....
	VACUUM SERVICE	[■] YES [] NO	.....
	ANTI CAVITATION TRIM	[] YES [■] NO	.....
PNEUMATIC ACTUATOR	MODEL NO. & SIZE		.....|.....
	CLOSE AT : OPEN AT (KG/CM2g)		.....|.....
	*TRAVEL TIME FOR	< 10 SEC	.....
	OPEN TO CLOSE, CLOSE TO OPEN	|	.....
	*VLV POSN. ON ELEC SIGNAL FAILURE	[■] TO OPEN [] STAYPUT [] TO CLOSE	.....
	*VALVE POSN. ON SUPPLY AIR FAILURE	[■] TO OPEN	.....
ACCESSORIES	SMART POSITIONER	[■] REQUIRED [] NOT REQUIRED	.....
	AIR FILTER REGULATOR	[■] REQUIRED [] NOT REQUIRED	.....
	AIR LOCK RELAY	[■] REQUIRED [] NOT REQUIRED	.....
	POSITION LIMIT SWITCH	[■] REQUIRED [] NOT REQUIRED	.....
	POSITION TRANSMITTER	PART OF SMART POSITIONER	.....
	SOLENOID VALVE	[■] REQUIRED [] NOT REQUIRED	.....
	E/P CONVERTER	PART OF SMART POSITIONER	.....
	JUNCTION BOX	[■] REQUIRED [] NOT REQUIRED	.....
	HAND WHEEL (SIDE MOUNTED)	[■] REQUIRED	.....
	LOCAL POSITION INDICATOR	[■] REQUIRED	.....
	ELECTRO PNEUMATIC POSITIONER	[] REQUIRED [■] NOT REQUIRED	.....

Tag No.: DRV-81 / LCJ24AA101 Qty.: 1 no. Date Sheet No. PES-145-06-DS1-0

DATA SHEET – A & B

DATA SHEET – A FOR CONTROL VALVE (WITH PNEUMATIC ACTUATOR) (TO BE FILLED BY PURCHASER)			DATA SHEET – B (TO BE FILLED UP BY BIDDER)
PERFORMANCE OF VALVE	LINEARITY	± 1%	.....
	HYSTERISIS	± 0.5%	.....
	SENSITIVITY	± 0.5%	.....
	ACCURACY (OVERALL)	± 1%	.....

SERVICE CONDITION*

SL. No. +	LOAD	FLOW (T/HR)	INLET PR. KG/CM2(A)	OUTLET PR. KG/CM2(A)	TEMP DEG (C)	CALC ULATED CV	% VLV LIFT	VLV O/L VELOCITY
1.	40% MCR	16.933	0.2454	0.2	64.1			
2.	60% MCR	27.856	0.3453	0.2	71.9			
3.	100% MCR	53.498	0.5346	0.2	82.5			
4.	VWO	58.309	0.5671	0.2	84.0			
5	Max	62	0.8	0.25	96.1			

VALVE TYPE	[] CAVITATION [■] FLASHING [] HIGH DP
* MAX SHUT OFF PRESS (KG/CM2g) 7 * BODY DESIGN : PRESS (KG/CM2g) | TEMP (DEG C) 7/VACUUM | 100 * IBR FORM III-C [] REQUIRED [■] NOT REQUIRED	....|..... .....
TOTAL WEIGHT (VALVE + ACTUATOR + ACCESSORIES) Kg	.....

NOTES:

STANDARD CONTROL VALVE HOOK-UP DIAGRAM
(WITH SMART POSITIONER)

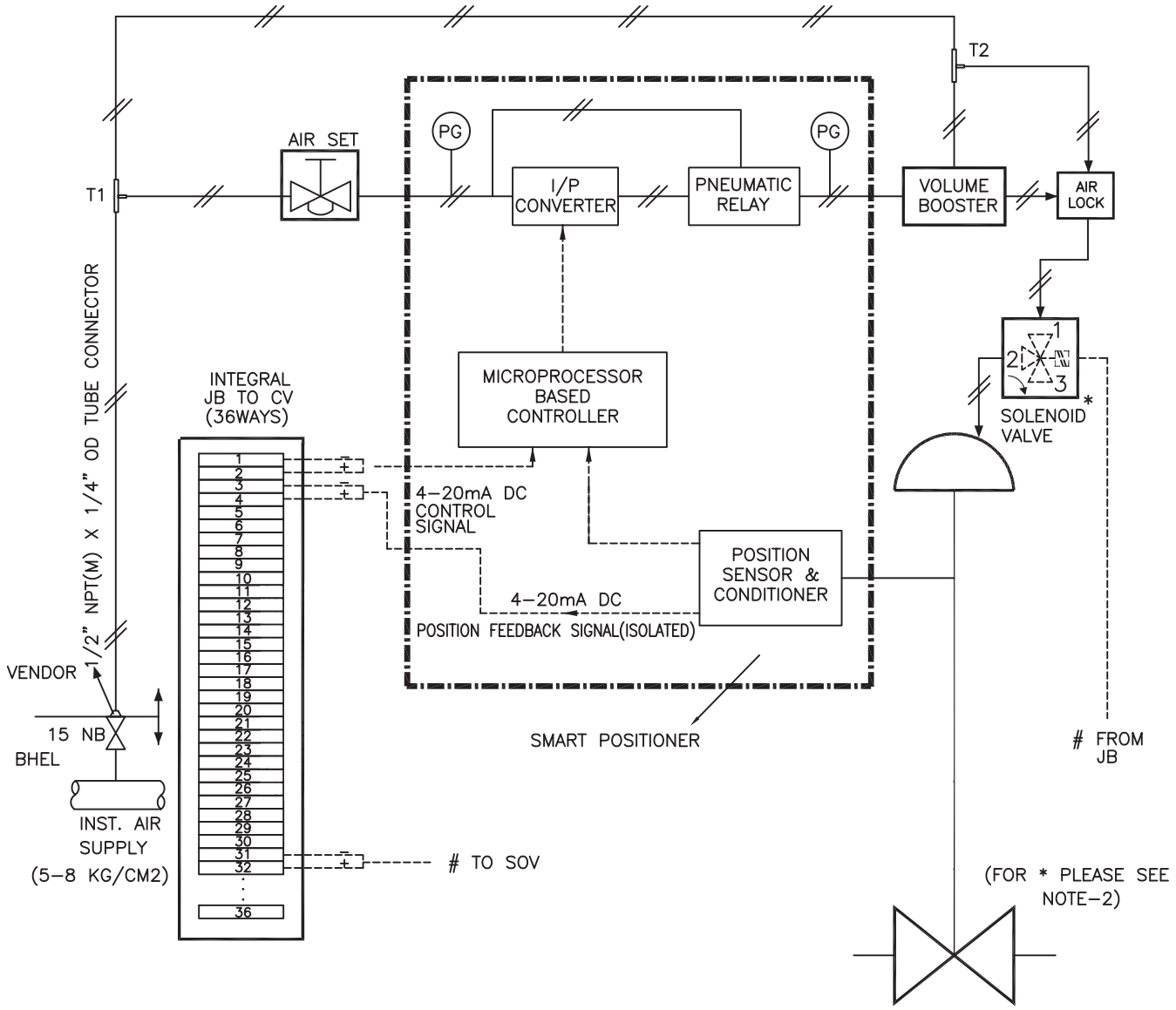

NOTES :-

1. POSITION OF EACH VALVE ON SUPPLY AIR FAILURE / ELECTRICAL SIGNAL FAILURE SHALL BE AS PER SPECIFICATION / DATA SHEET.
2. SOLENOID VALVE & LIMIT SWITCHES WILL BE PROVIDED ONLY FOR CONTROL VALVES IF INDICATED IN RESPECTIVE DATA SHEETS.
3. SOLENOID VALVES PORTS CONDITION:
   PORT 1 AND 2 SHALL BE CONNECTED UNDER DE-ENERGISED CONDITION.
   PORT 2 AND 3 SHALL BE CONNECTED UNDER ENERGISED CONDITION.
4. PRESSURE GAUGES REQUIRED FOR AIR SUPPLY & OUTPUT(S).
5. MOUNTING ACCESSORIES AS REQUIRED.
6. POSITION FEEDBACK SIGNAL SHALL BE 2 WIRE 4-20mA ISOLATED SIGNAL.
7. JB TERMINALS SHALL BE CAGE CLAMP TYPE SUITABLE FOR 2.5 SQ. MM COPPER WIRE. EXTERNAL CONNECTION, OF PLUG IN TYPE OR THROUGH CABLE GLAND, SHALL BE AS PER DATA SHEET
8. ALL APPLICABLE ACCESSORIES SHALL BE PROVIDED AS INDICATED IN THE INDIVIDUAL CONTROL VALVE DATA SHEET / ACCESSORIES DATA SHEET.
9. 12 METERS I/4" ~~PVC COATED COPPER /~~ SS TUBING (AS PER ACCESSORIES DATA SHEET) & 1 SET OF FITTINGS TO BE SUPPLIED FOR EACH CONTROL VALVE FOR CONNECTION TO ISO VLV AT INST AIR HEADER ON ONE END AND TO AIR LOCK RELAY/AIR FILTER REGULATOR ON THE OTHER END. ALL THE BRASS / SS FITTINGS SHALL BE DOUBLE COMPRESSION TYPE.
10. VOLUME BOOSTER (ALONG WITH TEE-T2 AND RELATED TUBING & CONNECTORS) SHALL BE PROVIDED IF REQUIRED. AIR CONNECTION TO VOLUME BOOSTER FROM TEE-T2 SHALL BE PROVIDED.

बीएचईएल BHEL	STANDARD	DRG. No.	PES-145-06B		
	TITLE:- CONTROL VALVE HOOK-UP DIAGRAM PE-TS-410-145-I104	REV. No.	01	DATE	24.03.15
		SHEET	50	OF	54

L1

STANDARD CONTROL VALVE HOOK-UP DIAGRAM
(FOR ON / OFF TYPE)

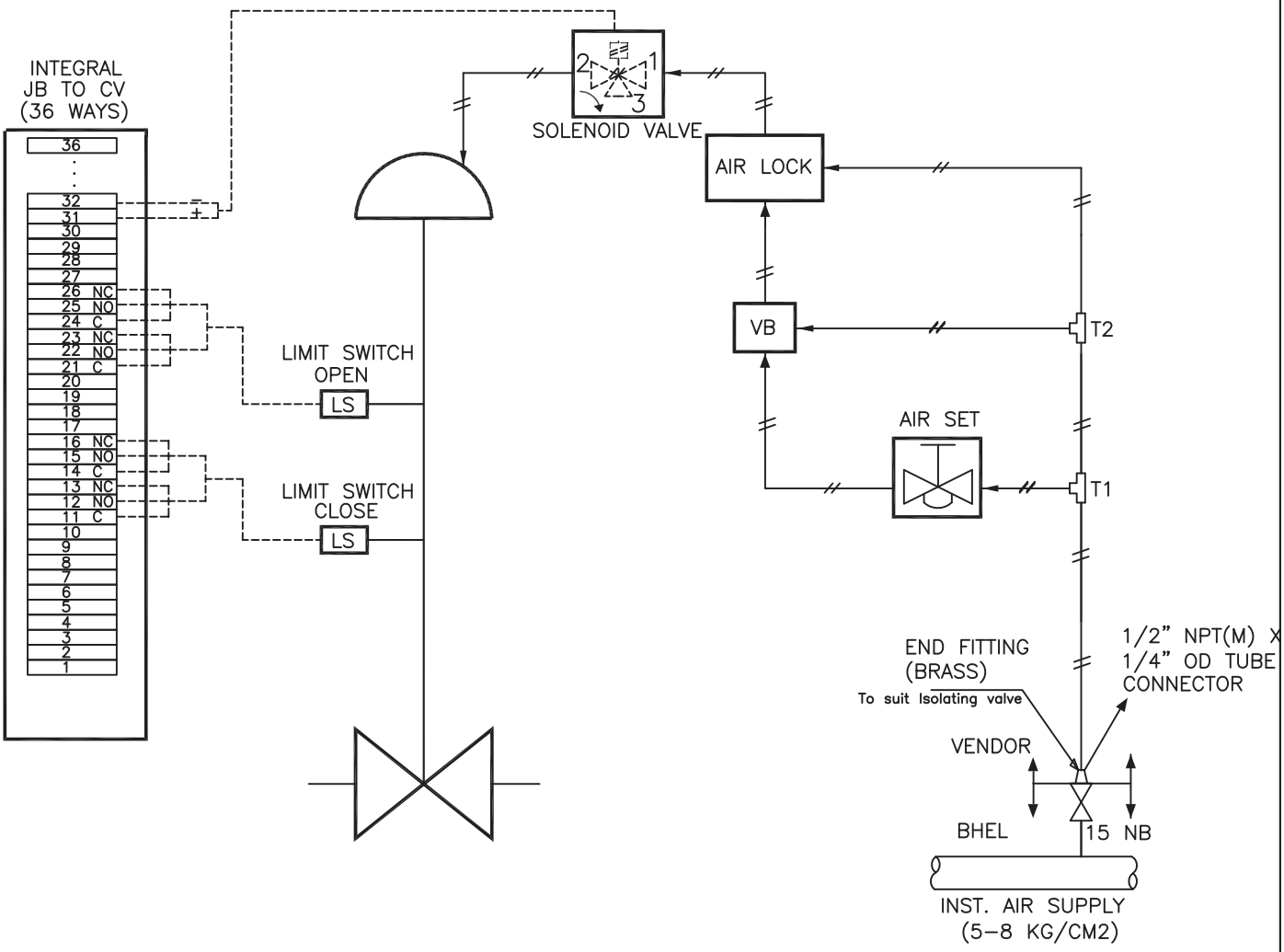

NOTES :–

1. POSITION OF EACH VALVE ON SUPPLY AIR FAILURE / ELECTRIC SIGNAL FAILURE SHALL BE AS PER SPECIFICATION / DATA SHEET.
2. SOLENOID VALVES PORTS CONDITION:
   PORT 1 AND 2 SHALL BE CONNECTED UNDER DE–ENERGISED CONDITION.
   PORT 2 AND 3 SHALL BE CONNECTED UNDER ENERGISED CONDITION.
3. MOUNTING ACCESSORIES AS REQUIRED.
4. JB TERMINALS SHALL BE CAGE CLAMP TYPE SUITABLE FOR 2.5 SQ. MM COPPER WIRE. EXTERNAL CONNECTION, OF PLUG IN TYPE OR THROUGH CABLE GLAND, SHALL BE AS PER DATA SHEET.
5. ALL APPLICABLE ACCESSORIES SHALL BE PROVIDED AS INDICATED IN THE INDIVIDUAL CONTROL VALVE DATA SHEET / ACCESSORIES DATA SHEET.
6. 12 METERS 1/4" ~~PVC COATED COPPER~~ / SS TUBING (AS PER ACCESSORIES DATA SHEET) & 1 SET OF FITTINGS TO BE SUPPLIED FOR EACH CONTROL VALVE FOR CONNECTION TO ISO VLV AT INST AIR HEADER ON ONE END AND TO AIR LOCK RELAY/AIR FILTER REGULATOR ON THE OTHER END. ALL THE BRASS / SS FITTINGS SHALL BE DOUBLE COMPRESSION TYPE.

बीएचईएल BHEL	STANDARD	DRG. No.	PES–145–06B		
	TITLE:– CONTROL VALVE HOOK–UP DIAGRAM PE-TS-410-145-I104	REV. No.	01	DATE	24.03.15
		SHEET	51	OF	54

STANDARD CONTROL VALVE HOOK-UP DIAGRAM
(DOUBLE ACTING PISTON ACTUATOR WITH SMART POSITIONER)

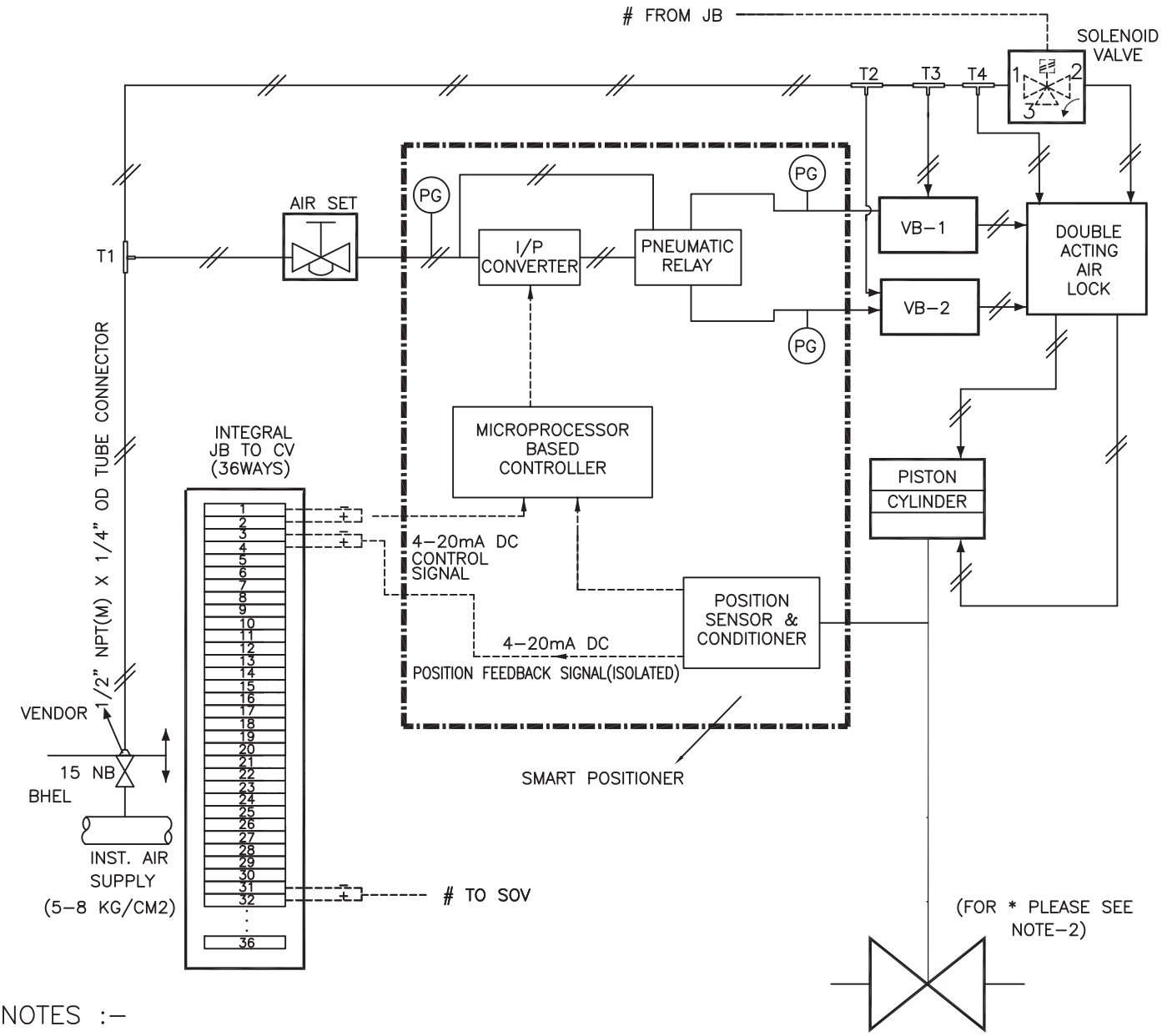

NOTES :–

1. POSITION OF EACH VALVE ON SUPPLY AIR FAILURE / ELECTRICAL SIGNAL FAILURE SHALL BE AS PER SPECIFICATION / DATA SHEET. AIR LOCK SHALL BE PROVIDED ACCORDINGLY.
2. SOLENOID VALVE & LIMIT SWITCHES WILL BE PROVIDED ONLY FOR CONTROL VALVES IF INDICATED IN RESPECTIVE DATA SHEETS.
3. SOLENOID VALVES PORTS CONDITION:
   PORT 1 AND 2 SHALL BE CONNECTED UNDER DE–ENERGISED CONDITION.
   PORT 2 AND 3 SHALL BE CONNECTED UNDER ENERGISED CONDITION.
4. PRESSURE GAUGES REQUIRED FOR AIR SUPPLY & OUTPUT(S).
5. MOUNTING ACCESSORIES AS REQUIRED.
6. POSITION FEEDBACK SIGNAL SHALL BE 2 WIRE 4–20mA ISOLATED SIGNAL.
7. JB TERMINALS SHALL BE CAGE CLAMP TYPE SUITABLE FOR 2.5 SQ. MM COPPER WIRE. EXTERNAL CONNECTION, OF PLUG IN TYPE OR THROUGH CABLE GLAND, SHALL BE AS PER DATA SHEET
8. ALL APPLICABLE ACCESSORIES SHALL BE PROVIDED AS INDICATED IN THE INDIVIDUAL CONTROL VALVE DATA SHEET / ACCESSORIES DATA SHEET.
9. 12 METERS 1/4" ~~PVC COATED COPPER~~ / SS TUBING (AS PER ACCESSORIES DATA SHEET) & 1 SET OF FITTINGS TO BE SUPPLIED FOR EACH CONTROL VALVE FOR CONNECTION TO ISO VLV AT INST AIR HEADER ON ONE END AND TO AIR LOCK RELAY/AIR FILTER REGULATOR ON THE OTHER END. ALL THE BRASS / SS FITTINGS SHALL BE DOUBLE COMPRESSION TYPE.
10. VOLUME BOOSTER (ALONG WITH TEE–T2 AND RELATED TUBING & CONNECTORS) SHALL BE PROVIDED IF REQUIRED. AIR CONNECTION TO VOLUME BOOSTER FROM TEE–T2 & TEE–T3 SHALL BE PROVIDED.

BHEL	STANDARD	DRG. No.	PES–145–06B		
	TITLE:– CONTROL VALVE HOOK–UP DIAGRAM PE-TS-410-145-I104	REV. No.	01	DATE	24.03.15
		SHEET	52	OF	54

Tag No.: **Applicable to all Tag Nos.** Qty.: **As required** Data Sheet No. PES-145-06-DS1-0

DATA SHEET – A & B

DATA SHEET – A FOR CONTROL VALVE (WITH PNEUMATIC ACTUATOR)
(TO BE FILLED BY PURCHASER)

POSITIONER	MFR. & MODEL No. BYPASS: GAUGES : ENCLOSURE CLASS INPUT SIGNAL OUTPUT SIGNAL	VENDOR DATA [] YES : [√] THREE : IP-65 4-20 mA TO SUIT ACTUATOR
AIR FILTER REGULATOR	MFR. & MODEL No. BOWL MATERIAL AIR SUPPLY PRESS (Kg/Cm2) OUTPUT PRESS (Kg/Cm2) OUTPUT GAUGE TYPE ACCURACY FILTER ELEMENT / ACCESSORIES MAT. FILTER SIZE ENCLOSURE TYPE MATERIAL	VENDOR DATA METALLIC 5.0 to 8.0 TO SUIT ACTUATOR [√] REQUIRED [] NOT REQUIRED CONSTANT BLEED TYPE ±0.1% PHOSPHER BRONZE / SS 5 MICRONS WEATHERPROOF & WATERPROOF SS
AIR LOCK	MFR. & MODEL No. SET PRESS (Kg/Cm2) SUPPLY PRESS (Kg/Cm2) RESET TYPE VENT PLUG	VENDOR DATA VENDOR DATA 3.0 to 5.0 AUTO [√] REQUIRED
LIMIT SWITCH	MFR. & MODEL No. OPEN : INT : CLOSE CONTACT TYPE RATING (AC/DC) ENCLOSURE CLASS	VENDOR DATA 1 NO. : --- : 1 No. SPDT 2 NO + 2 NC 5A 240V AC and 0.2A 220V DC [√] IP65
POSITION TRANSMITTER	MFR. & MODEL No. TYPE SUPPLY OUTPUT RATING ACCURACY ENCLOSURE CLASS	**IN BUILT SMART POSITIONER** [√] ELECTRONIC (2-WIRE) CONTACTLESS (LVDT TYPE) [] OTHER 24V DC [√] 4-20 ma [] 0-100 Ohms +/- 1% FS [√] IP65
SOLENOID VALVE	MFR. & MODEL No. RATING OPERATION | QTY COIL INSULATION CLASS ENCLOSURE CLASS MANUAL OPERATION	VENDOR DATA [√] 24V DC [] 220V DC [] 240V AC [] STAYPUT [√] INTERLOCK | [√] 1 [] 2 CLASS-H [√] IP65 [] NEMA 4 YES / INBUILT

Tag No.: **Applicable to all Tag Nos.** Qty.: **As required** Data Sheet No. PES-145-06-DS1-0

DATA SHEET – A & B

DATA SHEET – A FOR CONTROL VALVE (WITH PNEUMATIC ACTUATOR)
(TO BE FILLED BY PURCHASER)

SOLENOID VALVE	BODY MATERIAL TRIM MATERIAL ENCLOUSER MATERIAL	SS BAR STOCK SS 316 STAINLESS STEEL
HANDWHEEL	ORIENTATION	[] TOP MOUNTED [√] SIDE MOUNTED
VOLUME BOOSTER		BIDDER TO SPECIFY
JUNCTION BOX	MFR. & MODEL No. NO. OF WAYS SIZE CABLE GLANDS : (SIZE / QUANTITY) ENCLOSURE CLASS	VENDOR DATA THIRTY SIX AS REQUIRED AS REQUIRED AS REQUIRED IP-65
SS TUBING & FITTING PER CV.	SS TUBING & FITTINGS	12 METER FROM INST. AIR HEADER ISOLATING VALVE TO THE CONTROL VALVE
DIAPHRAGM	MATERIAL	NYLON REINFORCED NEOPRENE

1 X 800 MW KOTHAGUDEM TPS TSGENCO

QUALITY PLAN FOR CONTROL VALVES

CUSTOMER:	TELANGANA STATE POWER GENERATION CORPORATION LTD TELANGANA STATE, INDIA 1x800 MW KOTHAGUDAM TPS STAGE-VII UNIT#12, PALONCHA
OWNER'S CONSULTANT:	DEVELOPMENT CONSULTANTS PVT. LTD. CONSULTING ENGINEERS KOLKATA MUMBAI CHENNAI NEW DELHI
BHEL Maharatna Company	BHARAT HEAVY ELECTRICALS LTD POWER SECTOR PROJECT ENGINEERING MANAGEMENT NOIDA

COPY RIGHT AND CONFIDENTIAL
The information on this document is the property of BHARAT HEAVY ELECTRICALS LIMITED it must not be used directly or indirectly in any way detrimental to the interest of the company.

DEPT CODE		NAME	SIGN	DATE
	DRN	RINKY	-sd-	10.02.15
	DESN	PRJ	-sd-	10.02.15
1	CHD	SS	-sd-	13.02.15
	APPD	SSB	-sd-	13.02.15

REV	DATE	DESN	CHKD	APPD	REV	DATE	DESN	CHKD	APPD
02	27.05.15	PRJ	SS	SSB	01	07.05.15	PRJ -sd-	SS -sd-	SSB -sd-
	A) Revised in line with customer comments rcd vide letter no. 13A06/DCH-4/0230; Dated: 15.05.2015					A) Revised in line with customer comments rcd vide letter no. Lr. No.CPP/SE-II/421/KTPS-VII (1X800MW)/D.No.252/2015, 17.04.2015			

TITLE: QUALITY PLAN FOR CONTROL VALVES

DEPT. | SCALE | SIGN

DRAWING NO. PE-QP-410-145-1006

SHEET 1 OF 7 | REV. 02

PEM :: C&I	STANDARD QUALITY PLAN FOR CONTROL VALVE (PNEUMATIC)	QUALITY PLAN NO.: **PE-QP-410-145-I 006** VOLUME SECTION REV. NO. 02 DATE: 27.05.2015 SHEET 1 OF 7

Sl. No.	Component / operation	Characteristics Checked	* Category	Type/Method of Check	Extent of Check	Reference documents	Acceptance Norms	Format of Records	Agency $ P	W	V	Remarks
1.0	**MATERIAL**											
1.1	Body & Bonnet casting / forgings, plug, valve stem, seat ring/cage.	1. Physical, Chemical properties	MA	Physical, Chemical tests	One/ Heat(HT Batch)	Approved drg. / data sheet / BHEL specn.	Approved drg. / data sheet / BHEL specn.	Test Certificate	3	---	2,1	Any Forging>=40mm thick or >= 50mm dia shall be UT checked irrespective of rating.
		2. Heat Treatment	MA	Review of H.T. Chart	Each H.T.	Approved drg. / data sheet / BHEL specn.	Approved drg. / data sheet / BHEL specn.	Test Certificate	3/2	2	1	IBR Certification (if applicable) to be verified by BHEL
		3. Internal quality of castings	MA	RT for Body & UT for Bonnet(NDT)	100%	ASME B 16.34	ASME B 16.34	Test Report / FILM	3/2	2	1	Only for rating ANSI 900 and above. Applicable for Body and Bonnet only. For Lower rating only if called for in specification.
		4. Surface Quality	MA	1. Visual	100%	MSS-SP-55	MSS-SP-55	Test Certificate	3/2	---	2,1	
				2. MT/PT	100%	ASME B 16.34	ASME B 16.34	Test Certificate	3	2	1	After Machining on machined surface only

LEGEND: * CR - Critical characteristics; MA - Major characteristics; MI - Minor characteristics

RT- Radiographic Test; UT – Ultrasonic Test; PT – Dye penetrant Test; MT- Magnetic Test

$ P - Agency Performing the Test.; W - Agency Witnessing the Test.; V - Agency Verifying the Test.

1 - BHEL; 2 - Vendor; 3 - Sub-vendor; 4 – Customer / Customer TPIA

Sl. No.	Component / operation	Characteristics Checked	* Category	Type/Method of Check	Extent of Check	Reference documents	Acceptance Norms	Format of Records	Agency $ P	Agency $ W	Agency $ V	Remarks
		5. Pressure test for shell	MA	Hyd. Test	100%	ISA-S-75.19/ ASME B 16.34	ISA-S-75.19/ ASME B 16.34	Test Certificate	2	2	1	For Body & Bonnet after machining
1.2	Diaphragm	1. Surface Quality	MA	Visual	100%	Mfr. standard	Mfr. standard	Test Certificate	3/2	---	2,1	
		2. Hardness	MA	Measurement	100%	Mfr. standard	Mfr. standard	Test Certificate	3/2	---	2,1	
		3. Endurance / Life cycle	MA	Cyclic test 10,000 cycles	One / Type	10,000 cycles/ Mfr. standard.	No damage	Test Certificate	3/2		2,1	
1.3	Spring	1. Composition	MA	Chemical-Analysis	One sample/ Heat	Material spec. / Mfr. standard	Material spec. / Mfr. standard	Test Certificate	3	---	2,1	
		2. Mech. Properties	MA	Mech. Test	One sample/ Heat	Material spec. / Mfr. standard	Material spec. / Mfr. standard	Test Certificate	3	---	2,1	Mech. Test shall be as per IS Standard.
		3. Performance	MA	1. Stiffness ratio	100%	Material spec. / Mfr. standard	Material spec. / Mfr. standard	Test Certificate	3	---	2,1	
				2. Scragging	100%	Material spec. / Mfr. standard	Material spec. / Mfr. standard	Test Certificate	3	---	2,1	
				3. Cyclic test (Endurance)	One / type	10,000 cycles	Material spec. / Mfr. standard	Test Certificate	3	---	2,1	
				4. Dimension (Measurement)	One sample/ Lot	Mfr. standard	Appd Drg	Record	3	---	2,1	

Sl. No.	Component / operation	Characteristics Checked	* Category	Type/Method of Check	Extent of Check	Reference documents	Acceptance Norms	Format of Records	Agency $ P	Agency $ W	Agency $ V	Remarks
1.4	Electrical items [Limit switches, Solenoids, Position Transmitter(if provided externally)]	1. Routine Test	MA	HV, IR, Continuity function	100%	Rele. Standards	Rele. Standards	Test Certificate	3	---	2,1	In case TC is not available, Actual test shall be conducted
		2. Degree of protection	MA	IP/NEMA Tests	One sample / type	Approved Data sheet	Approved Data sheet	Test Certificate	3	---	2,1	
1.5	Pressure Gauges	1. Performance	MA	Review of calibration certificates	100%	Mfr. Standard	Mfr. Standard	Test Certificate	3	---	2,1	
		2. Marking	MA	Visual	100%	Mfr. standard	Mfr. standard	Records	3	---	2,1	
2.0	**IN PROCESS INSPECTION**											
2.1	After machining, i, Body ii Bonnet iii Plug iv Valve Stem v seat ring/cage	1. Surface flaws	MA	Visual & MT/PT	100% (on accessible surfaces)	ASME B 16.34	ASME B 16.34	Test Records	2	---	1	Butt weld ends shall be included.
		2. Dimensional checks	MA	Measurement	100%	Mfr. Standard	Mfr. Standard	Records	2	---	1	
		3. Hard facing (wherever applicable)	MA	Hardness Measurement	One sample/Lot	Mfr. Standard	Mfr. Standard	Records	2	---	1	
2.2	Lapping	Machining surface contact	MA	Blue Matching	One sample/lot	------	Proper Physical Contact	---	2	---	---	

LEGEND: * CR - Critical characteristics; MA - Major characteristics; MI - Minor characteristics

RT- Radiographic Test; UT – Ultrasonic Test

PT – Dye penetrant Test; MT- Magnetic Test

$ P - Agency Performing the Test.; W - Agency Witnessing the Test.; V - Agency Verifying the Test.

1 - BHEL; 2 - Vendor; 3 - Sub-vendor; 4 – Customer / Customer TPIA

PEM :: C&I	STANDARD QUALITY PLAN FOR CONTROL VALVE (PNEUMATIC)	QUALITY PLAN NO.: **PE-QP-410-145-I 006** VOLUME SECTION REV. NO. 02 DATE: 27.05.2015 SHEET 4 OF 7

Sl. No.	Component / operation	Characteristics Checked	* Category	Type/Method of Check	Extent of Check	Reference documents	Acceptance Norms	Format of Records	Agency $ P	W	V	Remarks
3.0	**TESTS ON COMPLETED VALVE**											
3.1	Actuator Chamber	Leakage & Strength	MA	Pneumatic test	100%	Mfr. Standard	No Leakage	Test Certificate	2	1	1	Refer Note-4
3.2	Body	Leakage and Pressure test (Body Mount Leakage)	MA	Hydro test	100%	ISA - S-75.19	No Leakage	Test Certificate	2	1	1	Refer Note-4
3.3	Seat leakage test for completed valve	Seat Leakage	MA	Pneumatic Test	100%	FCI-70.2	FCI-70.2	Test Certificate	2	1	1 , 4	Refer Note-4
4.0	**OPERATION TEST ON COMPLETED VALVE (Final inspection)**	1. Valve Travel	MA	Measurement	100%	Approved drg. / data sheet	Approved drg. / data sheet	Test Report	2	1	1 , 4	Refer Note-4
		2. Opening/Closing time	MA	Measurement	100%	Approved drg. / data sheet	Approved drg. / data sheet	Test Report	2	1	1 , 4	Refer Note-4
		3. Linearity/cam characteristic	MA	Measurement	100%	Approved drg. / data sheet	Approved drg. / data sheet	Test Report	2	1	1 , 4	Refer Note-4
		4. Repeatability	MA	Measurement	100%	Approved drg. / data sheet	Approved drg. / data sheet	Test Report	2	1	1 , 4	Refer Note-4
		5. Hysteresis	MA	Measurement	100%	Approved drg. / data sheet	Approved drg. / data sheet	Test Report	2	1	1 , 4	Refer Note-4
		6. Sensitivity	MA	Measurement	100%	Approved drg. / data sheet	Approved drg. / data sheet	Test Report	2	1	1 , 4	Refer Note-4
		7. Accuracy (Overall)	MA	Measurement	100%	Approved drg. / data sheet	Approved drg. / data sheet	Test Report	2	1	1 , 4	Refer Note-4
		8. Control Valve characteristics / CV Test	MA	♦Measurement (Press. vs. discharge and discharge vs. opening 0-100% in steps of 10%)	One per type	As per specs/ Approved drg. / data sheet	As per specs/ Approved drg. / data sheet	Test Certificate	2	1, 4	~~1~~	♦Size = Body & port size Or Body size & CV for non std port. Refer Note 1.

LEGEND: * CR - Critical characteristics; MA - Major characteristics; MI - Minor characteristics

RT- Radiographic Test; UT – Ultrasonic Test

PT – Dye penetrant Test; MT- Magnetic Test

$ P - Agency Performing the Test.; W - Agency Witnessing the Test.; V - Agency Verifying the Test.

1 - BHEL; 2 - Vendor; 3 - Sub-vendor; 4 – Customer / Customer TPIA

Sl. No.	Component / operation	Characteristics Checked	* Category	Type/Method of Check	Extent of Check	Reference documents	Acceptance Norms	Format of Records	Agency $ P	W	V	Remarks
		9. Operation of limit switch & solenoids and other accessories	MA	Function	100%	Approved drg. / data sheet	As per specs/ Approved drg. / data sheet	Test Report	2	1	1 , 4	On assembled valve Refer Note-4
		10. Overall dimensions	MI	Visual and dimensional	100%	Approved drg. / data sheet	As per specs/ Approved drg. / data sheet	Records	2	1	1 , 4	Refer Note-4
		11. Pre defined valve position in case of air failure	MA	Visual	100%	As per spec & Appd drg	As per spec & Appd drg	Test Certificate	2	1	1 , 4	
		12. Cleanliness, painting, stamping (for direction of flow), Tag No.	MA	Visual and dimensional	100%	Approved drg. / data sheet	As per specs/ Approved drg. / data sheet	Test Certificate	2	1	1	
5.0	**AUXILIARY ITEMS (Performance test of auxiliary items shall be performed on the completely assembled valve)**											
5.1	Positioner	Overall leakage after assembly including Nozzles leakage	MA	Leak Test (in the steady state input signal)	100 %	Mfr. Standard	No leakage	Test Certificate	3/2	---	1	Overall leakage including tubing
5.2	Air filter regulator	1. Normal air consumption	MA	Measurement	Each type	Mfr. Standard	No leakage	Test Certificate	3/2	---	1	
		2. Overall leakage	MA	Visual (soap solution)	100 %	Mfr. Standard	No leakage	Test Certificate	3/2	---	1	
5.3	Air lock relay	Performance Test	MA	Leakage test	100%	Mfr. Standard	No leakage	Test Certificate	3/2	---	1	
5.4	Electronic position transmitter(not applicable if provided integral to smart positioner)	1. Accuracy	MA	Operation	100%	Approved data sheet /	Approved data sheet /	Test Certificate	2	1	1	

LEGEND: * CR - Critical characteristics; MA - Major characteristics; MI - Minor characteristics

RT- Radiographic Test; UT – Ultrasonic Test; PT – Dye penetrant Test; MT- Magnetic Test

$ P - Agency Performing the Test.; W - Agency Witnessing the Test.; V - Agency Verifying the Test.

1 - BHEL; 2 - Vendor; 3 - Sub-vendor; 4 – Customer / Customer TPIA

Sl. No.	Component / operation	Characteristics Checked	* Category	Type/Method of Check	Extent of Check	Reference documents	Acceptance Norms	Format of Records	Agency $ P	Agency $ W	Agency $ V	Remarks
5.5	Current to Pneumatic converter(not applicable for smart positioner)	1. Physical Verification Make/Model	MA	Visual	100%	Approved drg. / data sheet	Approved drg. / data sheet	Test Certificate	2	---	2,1	
		2. Degree of Protection	MA	IP/NEMA test	Each type	Relevant Standard	Relevant Standard	Test Certificate	3	---	2,1	
		3. Linearity	CR	Measurement	100%	Approved drg. / data sheet / BHEL specn.	Approved drg. / data sheet / BHEL specn.	Inspection Report	2	---	1	
		4. Hysterisis	CR	Measurement	100%	Approved drg. / data sheet / BHEL specn.	Approved drg. / data sheet / BHEL specn.	Inspection Report	2	---	1	
5.6	Smart Positioner (As Applicable)	1. Physical Verification Make/Model	MA	Visual	100%	Approved drg. / data sheet	Approved drg. / data sheet	Test Certificate	2	---	2,1	
		2. Degree of Protection	MA	IP/NEMA test	Each type	Relevant Standard	Relevant Standard	Test Certificate	3	---	2,1	
		3. Linearity	CR	Measurement	100%	Approved drg. / data sheet / BHEL specn.	Approved drg. / data sheet / BHEL specn.	Inspection Report	2	---	1	
		4. Hysterisis	CR	Measurement	100%	Approved drg. / data sheet / BHEL specn.	Approved drg. / data sheet / BHEL specn.	Inspection Report	2	---	1	
		5. Calibration with Hand Held Communicator	MA	Measurement	Each type	Approved data sheet / Mfr. Standard	Approved data sheet / Mfr. Standard	Test Certificate	2	1	1	
6.0	**PAINTING**	Soundness of Painting	MA	Visual and Measurement	100%	BHEL specn. / Mfr. Standard	BHEL specn. / Mfr. Standard	Inspection Report	2	---	---	Refer Note-2

LEGEND: * CR - Critical characteristics; MA - Major characteristics; MI - Minor characteristics

RT- Radiographic Test; UT – Ultrasonic Test; PT – Dye penetrant Test; MT- Magnetic Test

$ P - Agency Performing the Test.; W - Agency Witnessing the Test.; V - Agency Verifying the Test.

1 - BHEL; 2 - Vendor; 3 - Sub-vendor; 4 – Customer / Customer TPIA

Sl. No.	Component / operation	Characteristics Checked	* Category	Type/Method of Check	Extent of Check	Reference documents	Acceptance Norms	Format of Records	Agency $			Remarks
									P	W	V	
7.0	**PACKING**	Soundness of Packing against transit damage	MA	Visual	100%	Mfr. Standard	Mfr. Standard	Inspection Report	2	---	---	Refer Note-3

NOTES:

1. ~~In case valid CV test certificate for a similar control valve(Same type, Same size, Same CV) is not submitted to BHEL by the vendor~~, CV test shall be conducted at FCRI/Any govt. approved laboratory/ BHEL approved Laboratory.
2. In the absence of BHEL spec. for painting, vendor to obtain BHEL's approval on their painting specification / procedure.
3. Sea worthy packing shall be provided, if applicable.
4. The quantum of check shall be 100% for manufacturer and 10% for BHEL/BHEL nominated inspection agency.
5. IBR certificates in Form III-C shall be submitted if called for in the specification/datasheet.
6. Copies of all TC's(Test Certificates) for materials duly correlated with Heat Nos., TC's for electrical items and mechanical tests(Leak/Operation) shall be submitted to BHEL for verification and acceptance.