FIRST ANGLE PROJECTION

(ALL DIMENSIONS ARE IN mm)

DRG. NO.

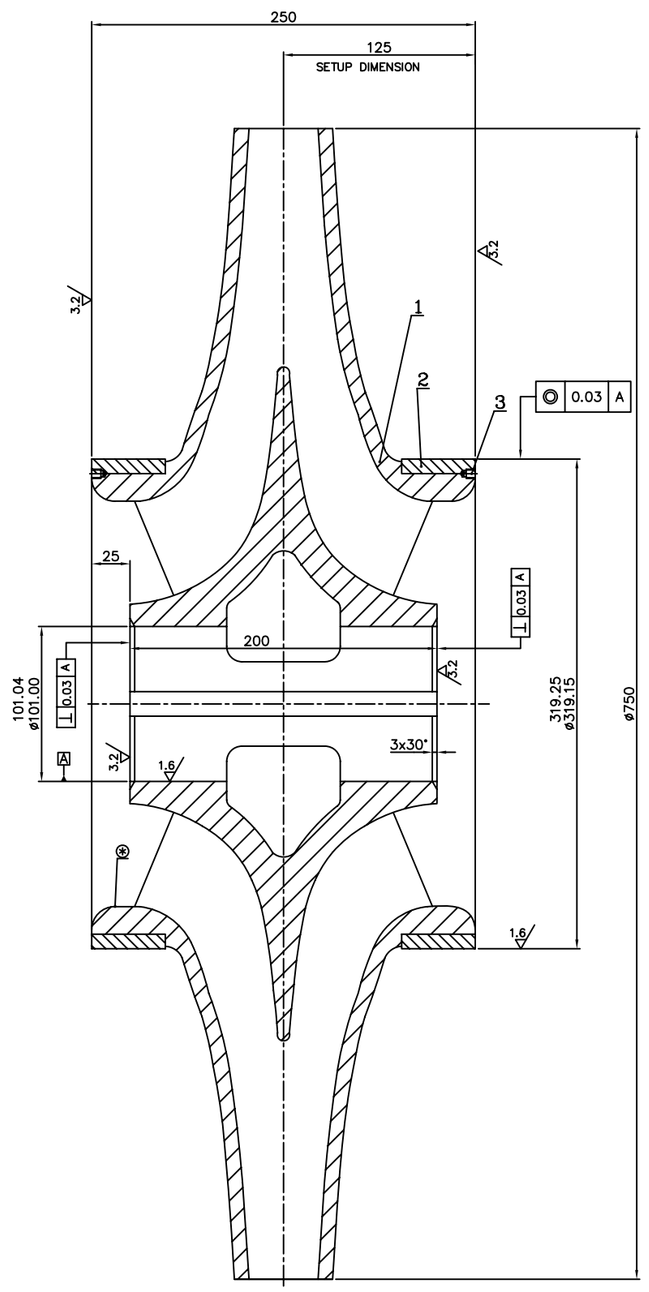

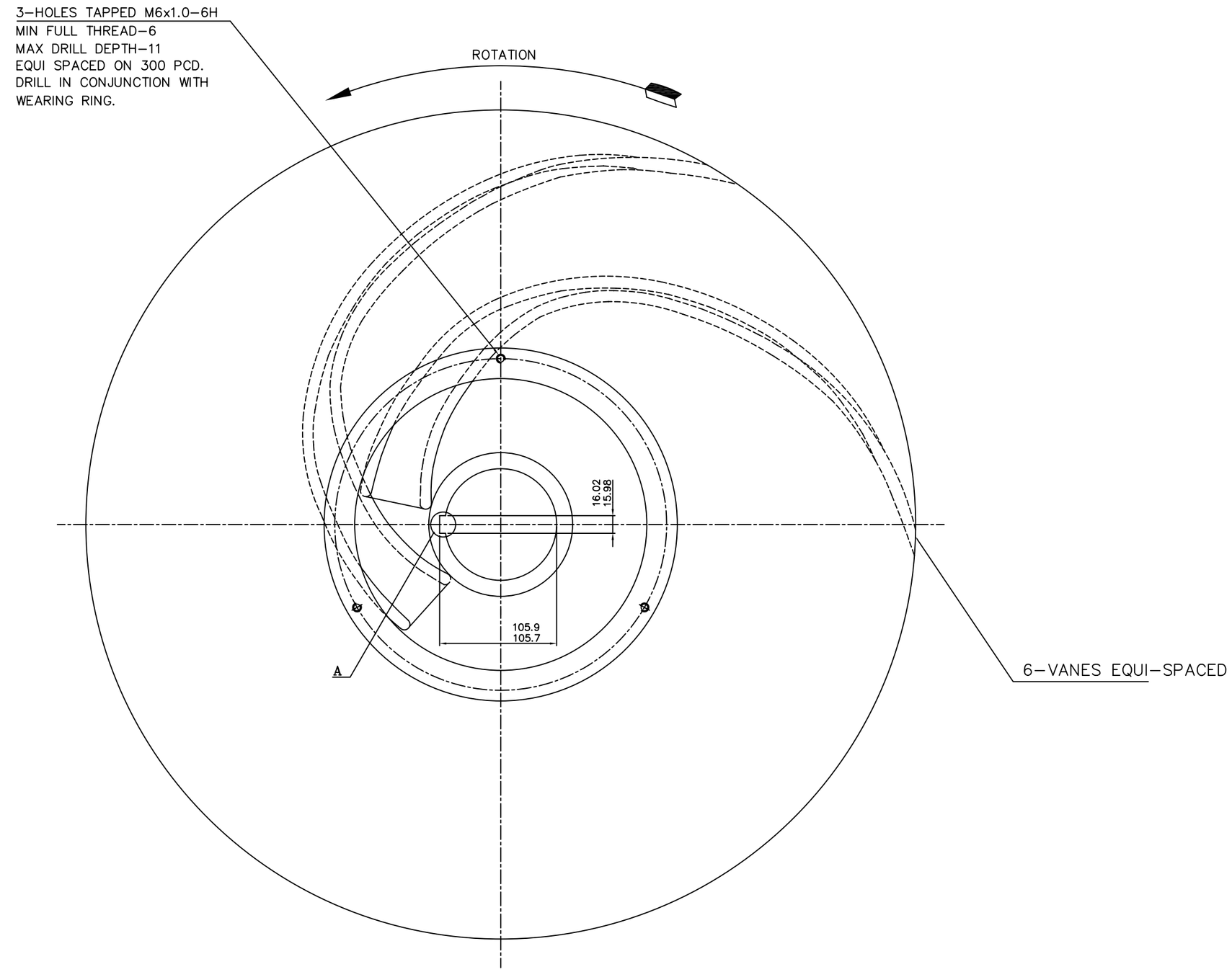

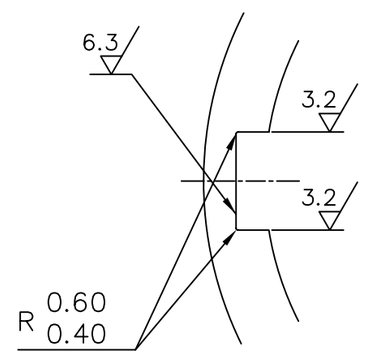

KEYWAY DETAIL 'A'

5. ⊛PLACE FOR HEAT NO. OR MELT NO.

ITEM NO	DESCRIPTION	DRAWING NO.	VAR. NO.	RAW MATERIAL SIZE OR CASTING DRG.NO. OR FORGING DRG.NO.	MATERIAL CODE / MATERIAL SPECN.	NET WT.	GROSS WT. / QUANTITY

THE FOLLOWING CONDITIONS APPLY EXCEPT OTHERWISE STATED...

1. REF.TO HY0230261 FOR UNSPECIFIED TOLERANCES.
2. CHAMFER M/CD SHARP EDGES 1.2 TO 1.0 AT 45°.
3. INTERNAL M/CD CORNER RADII 1 TO 0.7.
4. THE SURFACE ROUGHNESS WHEREVER NOT SHOWN SHALL BE TAKEN FROM THE SURFACE ROUGHNESS SHOWN OUT SIDE BACK SLASHES GIVEN AT THE TOP MOST RIGHT CORNER OF THE DRG.

TYPE OF PRODUCT OR NAME OF CUSTOMER/PROJECT: FA1B75

भारत हैवी इलेक्ट्रिकल्स लिमिटेड हैदराबाद
BHARAT HEAVY ELECTRICALS LTD. HYDERABAD

	NAME	SIGN.	DATE
DRN.	ACAD		
CHD.	M.S.RAM		
APPD.	B.R.K		

NO.OF VAR.

DEPT. PMP | CODE. 410 | SCALE 1:2 | WEIGHT (KG) | REF. TO ASSY DRG. – | ITEM NO. | NO.OF ITEMS

TITLE: IMPELLER ASSEMBLY

DRAWING NO. CG8P0268 | REV. 03

SHEET NO. 01 | NO OF SHEETS 01

REV.	DATE	ALTERED	CHECKED	APPD.	ZONE

THE INFORMATION ON THIS DOCUMENT IS THE PROPERTY OF BHARAT HEAVY ELECTRICALS LIMITED.
IT MUST NOT BE USED DIRECTLY OR INDIRECTLY IN ANY WAY DETRIMENTAL TO THE INTREST OF THE COMPANY

INVENTORY NO | SIGN. AND DATE | REF. DRG. NO. | COMPUTER FILE NAME :