FIRST ANGLE PROJECTION (ALL DIMENSIONS ARE IN mm)

FORM DG 46 (B)

DRAWING No. CDE-24-3223/E

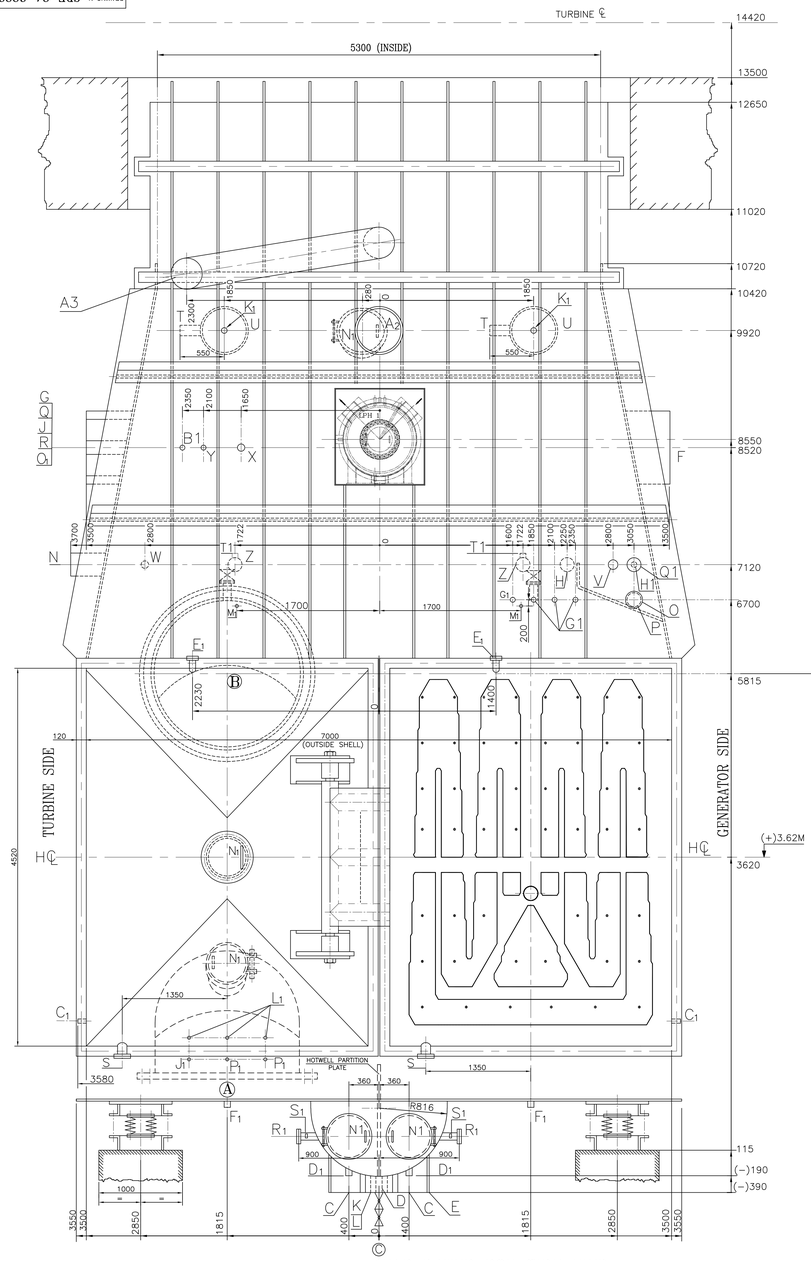

REAR WATER BOX SIDE VIEW

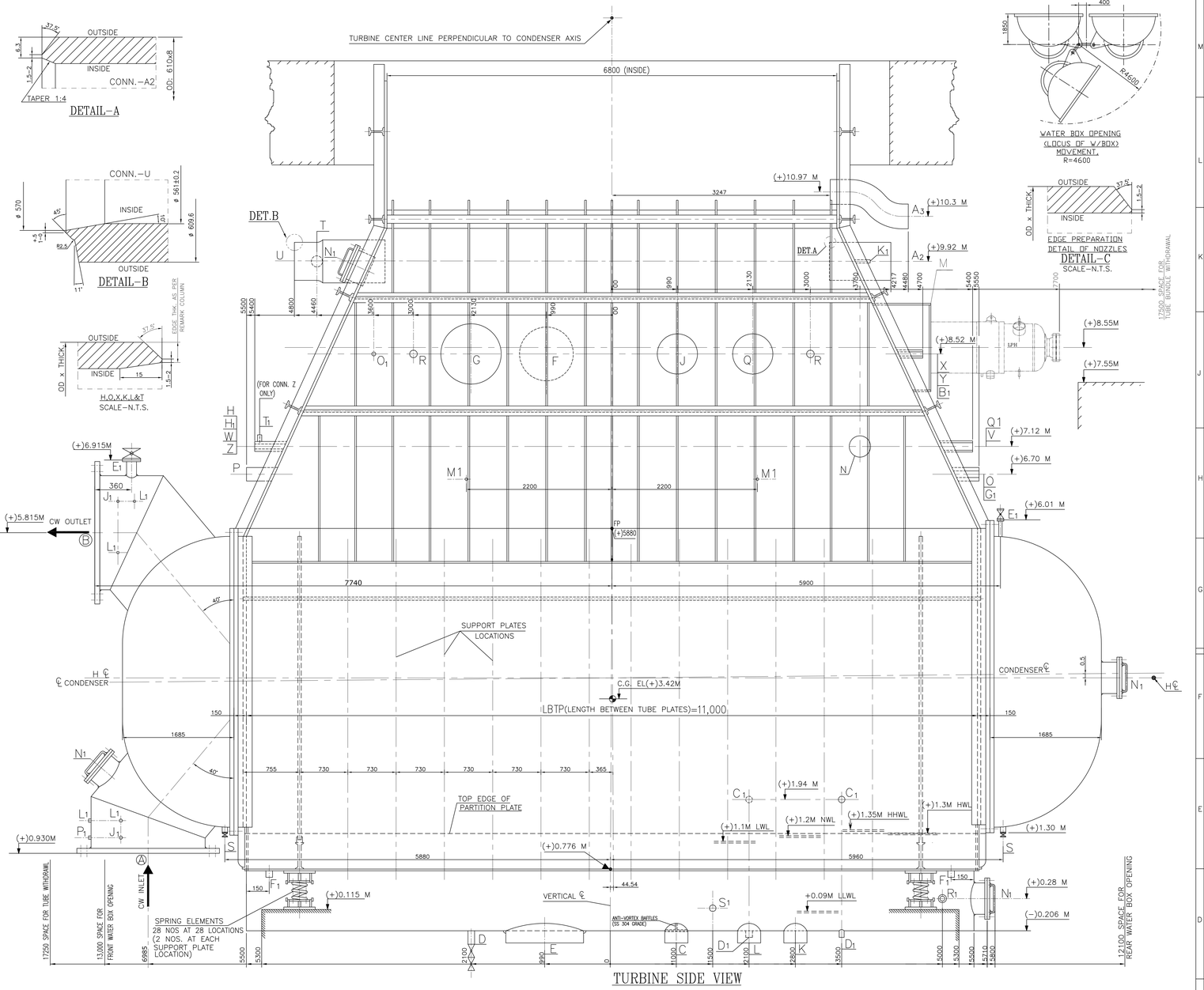

TURBINE SIDE VIEW

MAJOR ASSEMBLIES AND WEIGHT & DIMENSION ARE AS FOLLOWED :-

S.NO.	ITEM	WEIGHT (KG) (APPROX.)	SIZE (APPROX.)
1	BOTTOM PLATE	22205	11000 X 7100
2	LOWER DOME WALL (GEN. END)	8368	1100 X 4760
3	LOWER DOME WALL (TUR. END)	8670	1100 X 4760
4	LOWER DOME WALL (FWB SIDE)	7716	7502 X 5046
5	LOWER DOME WALL (RWB SIDE)	8346	7502 X 5046
6	UPPER DOME WALL (GEN. END)	1108	6800 X 3080
7	UPPER DOME WALL (TUR. END)	1108	6800 X 3080
8	UPPER DOME WALL (FWB SIDE)	3360	5300 X 3080
9	UPPER DOME WALL (RWB SIDE)	3431	5300 X 3080
10	DOME INTERNAL STIFFNERS	11477	–
11	SHELL INTERNALS	69712	7032 X 4700
12	FRONT WATER BOX TUR. SIDE	13910	3550 X 4600
13	FRONT WATER BOX GEN. SIDE	13910	3550 X 4600
14	REAR WATER BOX TUR. SIDE	9240	3550 X 4600
15	REAR WATER BOX GEN. SIDE	9240	3550 X 4600
16	WATER BOX REMOVAL DEVICE	5705	–
17	HOT WELL	6497	1100 X 1632
18	SIDE WALL TUR. SIDE	7800	10780 X 5248
19	SIDE WALL GEN. SIDE	7800	10780 X 5248
20	CONDENDAR SPRING SOPPORT	15449	–
21	AIR EXTRACTION PIPE, INSTRUMENTS-FITTINGS, STEAM THROW PIPE, LOOS ITEMS ETC	6547	–

TUBE (GSOS ITEM)		
1	TUBE MATERIAL	WELDED AUSTENTIC STEEL SA 249 TP 304
2	TUBE SIZE & QTY.	OD: 28.575 x 0.889/0.711 TOTAL: 15,664 Nos.
3	WEIGHT OF TUBES	85.80 M.TONNES

TECHNICAL REQUIREMENTS (TR)

01. CONDENSER IS DISPATCHED AS LOOSE PARTS MAINLY COMPRISING OF
(i) BOTTOM PLATE (ii) DOME WALLS (iii) FRONT & REAR WATER CHAMBERS (WITH TUBE PLATES) (iv) FRONT & REAR WATER BOXES (v) SIDE WALLS (vi) HOTWELL (vii) SPRING ELEMENTS (viii) SUPPORT PLATES (ix) AIR EXTRACTION PIPES (x) STIFFENING RODS, PIPES & BAFFLES (xi) INSTRUMENTS-FITTINGS (xii) STANDS PIPES (xiii) TUBES etc.
02. No. OF TUBES INDICATED IN TUBE SPECIFICATIONS INCLUDES TEN (10) EXTRA TUBES PROVIDED TO TAKE CARE OF CONTINGENT REQUIREMENTS.
03. PAINTING/PRESERVATION
3.1 DE-CONSERVATION
ALL SHELL (STEAM) SIDE COMPONENTS/SURFACES HAVE TO BE PROTECTED BY APPLYING STEAM WASHABLE RUST PREVENTIVE.
AFTER COMPLETION OF ERECTION WORK, SHELL SIDE SURFACE OF CONDENSER SHALL BE THROUGHLY CLEANED BY BLOWING STEAM.
3.2 PRESERVATION & CONSERVATION OF CONDENSER TO BE DONE AS PER HE-77005.
3.3 FOR SURFACE CONDENSER, NO THERMAL INSULATION IS REQUIRED.

CUSTOMER	M/S JSW
CUSTOMER'S CONSULTANT	–
ADDITIONAL INFORMATION	उत्पाद का प्रकार या ग्राहक/परियोजना का नाम / TYPE OF PRODUCT OR NAME OF CUSTOMER/PROJECT: 1X250MW JSW DOLVI CPP
STATUS OF DRAWING	
DISTRIBUTION OF PRINTS	

भारत हेवी इलेक्ट्रिकल्स लिमिटेड भोपाल
BHARAT HEAVY ELECTRICALS LTD. BHOPAL

	DESIGN NAME	DRAWN/ SIGN	DATE/तारीख
	कमलेश गालीब		23.07.25
	नारायण सिंह		23.07.25
	ए.के.माहौर		23.07.25

विभाग/DEPT. CDE	अ.प्र.एवं.सा.का की केंद्री CENTRAL QA		
सेल/CELL M			
CODE 411	AA-0230208		

मात्रक/SCALE 1:25	आ भार/WEIGHT (KG) –	
ज्ञा. दर्शाए का हेतु/REF. TO ASST. DRG.		
शीर्षक/TITLE: ERECTION DRAWING OF SURFACE CONDENSER		
ड्रा.सं./DRAWING NO. CDE-24-3223/E		
पृष्ठ सं./SHT. No. 1	पृष्ठों की संख्या/NO. OF SHT. 1	

आइटम सं./ITEM NO.	कुल संख्या/NO. OF ITEM
–	–

संशो./REV	00

THE INFORMATION ON THIS DOCUMENT IS THE PROPERTY OF BHARAT HEAVY ELECTRICALS LIMITED. IT MUST NOT BE DISCLOSED TO A THIRD PARTY OR USED FOR ANY OTHER PURPOSE EXCEPT WITH THE PRIOR WRITTEN CONSENT OF THE COMPANY.

COPYRIGHT AND CONFIDENTIAL

0-16010-40069

SIGN. & DATE | REF. DRAWING No.

INVENTORY No.

REV	DATE	ALTERED	CHECKED	APPROVED