Buyers Specific Additional Terms & Conditions in addition to GTC
Item Name: Pressure Transmitters
Projects: NTPC Talcher & LARA Project

1. Scope of Enquiry

E-bids on GeM are invited from bidders for the supply of **Pressure Transmitters for NTPC Projects (Talcher & LARA)**, as per requirement mentioned below:

Applicable DRG: 41337688101 with BHEL SPEC: ST48010 REV: 05.

Material requirement (Mat code wise): Details for one Project (2 Units) / Annex-1

Sl. No.	Material Code & Item Description	Total Qty (No.) for both Projects	Lot wise Qty per Project		
			Main-1	Main-2	Spares-3
1	W97372652570 PRESSURE TRANSMITTER 0-400 BAR	28	6	6	2
2	W97372652464 PRESSURE TRANSMITTER 0-80 BAR	36	8	8	2
3	W97372652472 PRESSURE TRANSMITTER 0 TO 16 BAR	14	3	3	1
4	W97372652588 PRESSURE TRANSMITTER (-)1 TO 399 BAR	14	3	3	1
5	W97372652480 PRESSURE TRANSMITTER -1 TO +79 BAR	22	5	5	1
6	W97372652596 PRESSURE TRANSMITTER -1 TO +50 BAR	10	2	2	1
7	W97372652553 PRESSURE TRANSMITTER (-1) TO (+39) BAR	6	1	1	1
8	W97372652561 PRESSURE TRANSMITTER (-1) to (+19) BAR (ABS)	10	2	2	1
9	W97372652545 PRESSURE TRANSMITTER (-1) TO (+9) BAR	6	1	1	1
10	W97372652537 PRESSURE TRANSMITTER (-1) TO (+3) BAR	6	1	1	1
11	W97372652502 PRESSURE TRANSMITTER 0-10 BAR (ABS)	14	3	3	1
12	W97372652510 PRESSURE TRANSMITTER 0-1.3 BAR (ABS)	54	12	12	3
13	W97372652529 FLOW TRANSMITTER 0-1800 MBAR (Diff. PT)	28	6	6	2
14	W97372652499 Diff. PRESSURE TRANSMITTER -10 TO +90 MBAR	10	2	2	1
15	W90313376050 HAND HELD COMMUNICATOR (FOR SMART PRESSURE TRANSMITTERS	4	1	1	-
16	W97372652618 PRESSURE TRANSMITTER (-1) TO (+109) BAR	6	1	1	1

Signature of supplier with seal

2. Consignee Details and delivery schedule:

Sl. No.	Project Name	Site/ Project Address	Requirement Schedule	
1	NTPC Talcher	HEAD OF PROJECTS (NTPC LIMITED), TALCHER TPP, STAGE-III 2X660MW, PO TALCHER, DISTT- ANGUL STATE OF ODISHA, PIN 759101	Lot-1	30.12.2025
			Lot-2	30.04.2026
			Lot-3	26.04.2027
2	NTPC LARA	BHEL Site office, 2X800 MW NTPC LARA stage II project, Pusaur, Dist Raigarh, Chhattisgarh 496440	Lot-1	04.06.2026
			Lot-2	04.10.2026
			Lot-3	10.11.2026

3.0: Buyers Specific Additional Terms & Conditions in addition to GTC

Annexure A:

Note: Please fill your acceptance/ comments in confirmation column. Blank column will be understood as accepted by bidder.

Sl. NO.	Terms	Description	Your confirmation
1.	**Confirmation to compliance of GTC on GeM 4.0 (Version 1.23)**	General terms and conditions on **GeM 4.0 (Version 1.23 dated 05.03.2025)** or subsequent rules/policies issued by GeM shall be applicable. **Please confirm.**	
2.	**Compliance of Rule 144 (xi) of GFR 2017**	Compliance of Restrictions under Rule 144 (xi) of GFR 2017 shall be as per GeM.	
3.	**Public Procurement (Preference to Make in India)**	For this procurement, the local content to categorize, a supplier as a Class-I local supplier/ Class-II local Supplier and purchase preference to Class-I local supplier, is as defined in Public Procurement (Preference to Make in India), PPP-MII Order No. P-45021/ 2/ 2017-PP (BE-ll) dtd. 04/06/2020 issued by DPIIT. In case of subsequent Orders issued by the respective Nodal Ministry, changing the definition of local content for the items of the NIT, the same shall be applicable even if issued after issue of this NIT, but before opening of Part-II bids against this NIT.	
		Vendor to submit tender specific self-certificate in line with PPP-MII Order No. P-45021/ 2/ 2017-PP (BE-ll) dtd. 04/06/2020 clearly indicating percentage of local content. **Please Confirm** DECLARATION REGARDING MINIMUM LOCAL CONTENT BHEL Annex-12 (format given below in ATC)	
4.	**Customer approval Condition**	Please note that procurement shall be done only from the vendors, approved by end customer i.e. NTPC. BHEL will share successful vendor name and credentials to customer for approval before price bid opening and Part-2 will be opened for customer approved vendor only. VENDORS TO PROVIDE THEIR CREDENTIALS FOR ADANI CUSTOMER APPROVAL AS PROFILE, PAST EXPERIENCE PO, PERFORMANCE CERTIFICATE ETC.	
5.	**Pre-Qualification Requirements (PQR)**	The Pre-Qualification Requirements have been compiled and format is placed at Sl. No. 34. Bidder to submit filled copy of PQR Table with supporting PO copy, unpriced dispatch document, approved GA drawing etc. All the bidders should ensure submission of complete details and documents as called for in these requirements. The Offers submitted by the bidders would be scrutinized with respect to Pre-Qualification Requirements first. Techno-Commercial offer of only those bidders shall be evaluated who meet the Pre-Qualification Requirements.	

Signature of supplier with seal

6.	**Special Instruction of Technical requirement**	1. Please confirm that Specification No. ST48010 rev-05 & DRG No. 41337688101 for PT/DPT and DRG NO. 41337622101 rev-01 for HHC shall be followed for concerned items of the enquiry. DRG NO. CIEPTG8 is to be followed for KKS TAG details. Please submit duly endorsed copy of technical documents.	
		2. DATASHEET/BILL OF MATERIAL (BOM) IS REQUIRED FOR BHEL/ CUSTOMER APPROVAL. Please confirm to provide.	
		3. APPLICABLE TYPE TEST STANDARD IS BS-6447/IEC 60770. 4. CUSTOMER APPROVAL IS REQUIRED ON COPY OF TYPE TEST AND THESE TYPE TEST SHOULD HAVE BEEN CONDUCTED AFTER MARCH 2013.	
		5. All instruments shall be calibrated as per BHEL range of measurement before dispatch. Please confirm.	
		6. vendor to provide operation & maintenance (O & M) manual along with supplies and 1 copy along with soft copy of O & M manual to be sent to BHEL Haridwar. Please confirm.	
		7. All accessories should be in assembled condition including plug and socket connector, before dispatch of the items. Please confirm.	
		8. Please note that all items for one Project to be procured from same vendor.	
		9. Items shall be dispatched in suitable "wooden boxes" with steel strips fixed around the box", or "any other suitable packaging", which can withstand transit movement, local environment and moisture/ water.	
		10. In addition to packing instructions given in spec. No. ST48010 (cl. No. 13), spec no. ST33002 Rev-02 (cl. No. 3.1 A & B) should be followed for packing of all items.	
		11. Test and Guarantee certificates are required to be submitted. Please confirm	
		12. Items against Lot-3 of each material code are spare items. These spare items are to be packed together in separate green colored box. 13. Blank SS Tag should be attached with Lot-3 Spare material. 14. PREFIX OF TAG NO. (IF ANY) SHALL BE INFORMED DURING BOM APPROVAL.	
7.	**Specification confirmation**	Kindly confirm that quoted offer by you have been complied all technical requirements as given in tender documents and submit all documents to BHEL as per tender specifications and drawings without any deviations. Please confirm that supplied item shall be in line with BHEL drawings and specification called in enquiry in totality. If any undeclared deviation is found w.r.t. BHEL specifications and drawings after placement of PO. Vendor shall have to comply with BHEL specification and drawing requirements without any commercial or delivery implication. Please confirm	
8.	**Quality Requirements**	**For indigenous supply**: Inspection by BHEL nominated inspection agency "**QUEST**" as per BHEL SQP "QA/BE/QP/902, REV. 12". Vendor has to endorse the Q.P (enclosed with item catalogues). For Hand Held Communicator (Material Code: W90313376050): T.C./COC is required as per ordering document.	
		For Foreign vendors: Testing and certification is required as per ordering drawing and specification. For Hand Held Communicator (Material Code: W90313376050): T.C./COC is required as per ordering document. Please confirm to comply above quality requirement.	
		VENDER TO CONFIRM FOR VISUAL AND FUNCTIONAL INSPECTION W.R.T. TECHNICAL PARAMETERS AS AGREED TECHNICALLY.	
9.	**Price basis, Evaluation Currency, Firm prices & Transit Insurance**	Prices should be quoted on F.O.R. Destination up to Respective NTPC Project basis i.e. including freight, packing & forwarding charges, GST etc. **The evaluation currency for this tender shall be INR.** **Price will remain firm and fixed during entire execution of tender/supply.** **Transit insurance shall be arranged by BHEL and not to be included in the prices.**	

Signature of supplier with seal

10.	**Evaluation criteria**	Evaluation shall be done on the basis of total landed cost to BHEL (up to respective NTPC project) for the complete requirement covered in the Bid. (considering ITC). Bidders to insure applicability of ITC on Gem portal.	
11.	**Payment Terms**	The payment term shall be done after issue of consignee receipt-cum acceptance certificate (CRAC) as per the below details: Type of Bidder — Payment Terms (Number of Days) from MRC Micro & Small Enterprises (MSEs) — 45 days Medium Enterprises — 60 days Non MSME — 90 days Subject to submission of non-discrepant documents. MSE benefits shall be as per GeM/ GeM NIT.	
12.	**Manufacturing cum Delivery Period**	Kindly quote your minimum **delivery period in no. of weeks. (time taken including manufacturing + Joint inspection + 07 days for MDCC issuance and up to Dispatch)** From the date of manufacturing clearance…….. Early delivery will be accepted as per BHEL site requirement.	
13.	**Manufacturing clearance**	In case of ordering, vendor has to take manufacturing clearance from BHEL before starting manufacturing of material. No manufacturing is to be started without getting clearance from BHEL. Kindly confirm.	
14.	**Document submission for approval from BHEL/customer**	Drawings/Data sheets/Documents/Type Test etc. as called for in the specifications shall be submitted for approval to BHEL for BHEL/customer approval within 30 days of purchase order. Any delay in delivery on account of late submission of drawings/data sheets/QAP/documents shall be to vendors account. BHEL will arrange the approval of the drawings/data sheets/ documents within 30 days of their receipt provided those are complete in all respect. Delays in approval shall be dealt on merit basis.	
15.	**Packing & QR code Instructions**	QR code Instructions shall be complied as per below instructions - 1.Before shipment of material, vendor has to obtain QR code from BHEL and these QR codes (properly laminated) shall be affixed on packages/boxes/crates/bundles of material to be supplied. While packing the material following is to be ensured- 2.Material of unit-1, unit-2 and mandatory spares need to be packed in separate boxes. Loose items (if any) needs to be packed in boxes/crates or bundled together. For loose items one marker board needs to be send for each bundle for fixing this RFID Tag at site. QR code will be issued box wise/bundle wise. Vendor to ensure correct QR Code are affixed on the boxes/bundles. 3.Please confirm that each item in the box of spares items must be tagged with the same description as per packing list. Detail of each spare should be mentioned in the packing list. Please confirm.	
16.	**MDCC clause**	Material shall be dispatched only after issue of material dispatch clearance certificate (MDCC) by BHEL. All test certificates and relevant documents are to be sent to BHEL before dispatch of material for issue of MDCC, which will be issued after review of test certificates etc. MDCC will be issued within 07 days of receipt of these documents once found complete in all respects. In case of any delay on account of BHEL in issuing MDCC, delivery shall be extended by no. of days in excess of 7 days taken by BHEL in issuing MDCC and delays shall be dealt on merit basis. In case any material is dispatched without MDCC and any loss is incurred by Supplier/Vendor for any reason whatsoever, BHEL shall not be responsible in any manner to compensate the supplier in this regard. Material is to dispatched within 07 days of receipt of MDCC from BHEL without waiting for PO amendment.	
17.	**Guarantee**	Kindly confirm that all equipment shall be guaranteed for trouble free performance for 24 months from the date of shipment or 12 months from the date of commissioning, whichever is earlier. Buyer to submit guarantee certificate mentioning above guarantee period. Please note that offers with guarantee period lesser than above mentioned guarantee period may result in rejection of the offer.	

Signature of supplier with seal

18.	**Liquidated Damages**	If the Seller/Service Provider fails to deliver any or all of the Goods/Services within the original/re-fixed delivery period(s) specified in the contract, the Buyer will be entitled to deduct/recover the Liquidated Damages for the delay, unless covered under Force Majeure conditions aforesaid, @ 0.5% of the contract value of delayed Lot per week or part of the week of delayed period as pre-estimated damages not exceeding 10% of the contract value of delayed quantity without any controversy/dispute of any sort whatsoever.	
		The date of dispatch mentioned on LR/GR would be treated as the date of delivery for penalty purposes.	
		Complete material of each lot to be dispatch in one go only. In case of partial supply, dispatch of last item of lot shall be considered for LD purpose.	
19.	**Settlement of Dispute, CONCILIATION & ARBITRATION:**	**Settlement of Dispute** If any dispute or difference of any kind whatsoever shall arise between BHEL and the Supplier/Vendor, arising out of the contract for the performance of the work whether during the progress of contract termination, abandonment or breach of the contract, it shall in the first place referred to Designated Officer / IEM for amicable resolution by the parties. Designated Officer / IEM who within 60 days after being requested shall give written notice of his decision to the contractor. Save as hereinafter provided, such decision in respect of every matter so referred shall forthwith be given effect to by the Supplier/Vendor who shall proceed with the work with all due diligence, whether he or BHEL desires to resolve the dispute as hereinafter provided or not. If after the Designated Engineer has given written notice of this decision to the party and no intention to pursue the dispute has been communicated to him by the affected party within 30 days from the receipt of such notice, the said decision shall become final and binding on the parties. In the event the Supplier/Vendor being dissatisfied with any such decision or if amicable settlement cannot be reached then all such disputed issues shall be resolved through conciliation in terms of the BHEL Conciliation Scheme 2018 as per 'CONCILIATION' Clause. **CONCILIATION:** Any dispute, difference or controversy of whatever nature howsoever arising under or out of or in relation to this Agreement (including its interpretation) between the Parties, and so notified in writing by either Party to the other Party (the "Dispute") shall, in the first instance, be attempted to be resolved amicably in accordance with the conciliation procedure as per BHEL Conciliation Scheme 2018. The proceedings of Conciliation shall broadly be governed by Part-III of the Arbitration and Conciliation Act 1996 or any statutory modification thereof and as provided in - "Procedure for conduct of conciliation proceedings" (as available in www.bhel.com). Note: Ministry of Finance has issued OM reference No. 1/2/24 dated 03.06.2024 regarding "Guidelines for Arbitration and Mediation in Contracts of Domestic Public Procurement. In the said OM it has been recommended that Government departments/ Entities/agencies are to encourage mediation under the Mediation Act. 2023. The said Act has not yet been notified by the Government. Therefore, the clause "Settlement of Disputes" shall be modified accordingly as and when the Mediation Act 2023 gets notified. **ARBITRATION:** Except as provided elsewhere in this Contract, in case Parties are unable to reach amicable settlement (whether by Conciliation to be conducted as provided herein above or otherwise) in respect of any dispute or difference; arising out of the formation, breach, termination, validity or execution of the Contract; or, the respective rights and liabilities of the Parties; or, in relation to interpretation of any provision of the Contract; or. in any manner touching upon the Contract (hereinafter referred to as the 'Dispute'), then, either Party may, refer the disputes to Arbitral Institution and such dispute to be adjudicated by Sole Arbitrator appointed in accordance with the Rules of said Arbitral Institution. A party willing to commence arbitration proceeding shall invoke Arbitration Clause by giving notice to the other party in terms of section 21 of the Arbitration & Conciliation Act, 1996 (hereinafter referred to as the 'Notice') before referring the matter to arbitral institution. The Notice shall be addressed to the Head of the Region, Power Sector/ Unit, BHEL, executing the Contract and shall contain the particulars of all claims to be referred to arbitration with sufficient detail and shall also indicate the monetary amount of such claim including interest, if any. After expiry of 30 days from the date of receipt of aforesaid notice, the party invoking the Arbitration shall submit that dispute to the Arbitral Institutions (shall be identified by the contract issuing agency) and that dispute shall be adjudicated in accordance with their respective Arbitration Rules. The matter shall be adjudicated by a Sole Arbitrator who shall necessarily be a Retd Judge having considerable experience in commercial matters to be appointed/nominated by the respective institution. The cost/expenses pertaining to the said Arbitration shall also be governed in accordance with the Rules of the respective Arbitral Institution. The decision of the party invoking the Arbitration for reference of dispute to a specific Arbitral institution for adjudication of that dispute shall be final and binding on both the parties and shall not be subject to any change thereafter. The institution once selected at the time of invocation of dispute shall remain unchanged. The fee and expenses shall be borne by the parties as per the Arbitral Institutional rules. The Arbitration proceedings shall be in English language and the seat and venue of Arbitration shall be at the court(s) of Haridwar. Subject to the above, the provisions of Arbitration & Conciliation Act 1996 and any amendment thereof	

Signature of supplier with seal

		shall be applicable. All matters relating to this Contract and arising out of invocation of Arbitration clause are subject to the exclusive jurisdiction of the Court(s) situated at Haridwar , shall have exclusive jurisdiction. Notwithstanding any reference to the Designated Engineer or Conciliation or Arbitration herein, a. the parties shall continue to perform their respective obligations under the Contract unless they otherwise agree. Settlement of Dispute clause cannot be invoked by the Contractor, if the Contract has been mutually closed or 'No Demand Certificate' has been furnished by the Contractor or any Settlement Agreement has been signed between the Employer and the Contractor. It is agreed that Mechanism of resolution of disputes through arbitration shall be available only in the cases where the value of the dispute is less than Rs. 10 Crores. In case the disputed amount Claim, Counter claim including interest is Rs. 10 crores and above, the parties shall be within their rights to take recourse to remedies other than Arbitration, as may be available to them under the applicable laws after prior intimation to the other party. Subject to the aforesaid conditions, provisions of the Arbitration and Conciliation Act, 1996 and any statutory modifications or re-enactment thereof as amended from time to time, shall apply to the arbitration proceedings under this clause. In case, multiple arbitrations are invoked (whether sub-judice or arbitral award passed) by any party to under this contract, then the cumulative value of claims (including interest claimed or awarded) in all such arbitrations shall be taken in account while arriving at the total claim in dispute for the subject contract for the purpose of clause mentioned above. Disputes having cumulative value of less than 10 crores shall be resolved through arbitration and any additional dispute shall be adjudicated by the court of competent jurisdiction.	
20.	**BREACH OF CONTRACT, REMEDIES AND TERMINATION**:	The following shall amount to breach of contract: I. Non-supply of material/ non-completion of work by the Supplier/Vendor within scheduled delivery/ completion period as per contract or as extended from time to time. II. The Supplier/Vendor fails to perform as per the activity schedule and there are sufficient reasons even before expiry of the delivery/ completion period to justify that supplies shall be inordinately delayed beyond contractual delivery/ completion period. III. The Supplier/Vendor delivers equipment/ material not of the contracted quality. IV. The Supplier/Vendor fails to replace the defective equipment/ material/ component as per guarantee clause. V. Withdrawal from or abandonment of the work by the Supplier/Vendor before completion as per contract. VI. Assignment, transfer, subletting of Contract by the Supplier/Vendor without BHEL's written permission resulting in termination of Contract or part thereof by BHEL. VII. Non-compliance to any contractual condition or any other default attributable to Supplier/Vendor. VIII. Any other reason(s) attributable to Vendor towards failure of performance of contract. In case of breach of contract, BHEL shall have the right to terminate the Purchase Order/ Contract either in whole or in part thereof without any compensation to the Supplier/Vendor. IX. Any of the declarations furnished by the contractor at the time of bidding and/ or entering into the contract for supply are found untruthful and such declarations were of a nature that could have resulted in non-award of contract to the contractor or could expose BHEL and/ or Owner to adverse consequences, financial or otherwise. X. Supplier/Vendor is convicted of any offence involving corrupt business practices, antinational activities or any such offence that compromises the business ethics of BHEL, in violation of the Integrity Pact entered into with BHEL has the potential to harm the overall business of BHEL/ Owner. Note-Once BHEL considers that a breach of contract has occurred on the part of Supplier/Vendor, BHEL shall notify the Supplier/Vendor by way of notice in this regard. Contractor shall be given an opportunity to rectify the reasons causing the breach of contract within a period of 14 days. In case the contractor fails to remedy the breach, as mentioned in the notice, to the satisfaction of BHEL, BHEL shall have the right to take recourse to any of the remedial actions available to it under the relevant provisions of contract. **Remedies in case of Breach of Contract.** i) Wherein the period as stipulated in the notice issued under above clause has expired and Supplier/Vendor has failed to remedy the breach, BHEL will have the right to terminate the contract on the ground of "Breach of Contract" without any further notice to contractor. ii) Upon termination of contract, BHEL shall be entitled to recover an amount equivalent to 10% of the Contract Value for the damages on account of breach of contract committed by the Supplier/Vendor. This amount shall be recovered by way of encashing the security instruments like performance bank guarantee etc available with BHEL against the said contract. In case the value of the security instruments available is less than 10% of the contract value, the balance amount shall be recovered from other financial remedies (i.e. available bills of the Supplier/Vendor, retention amount, from the money due to the Supplier/Vendor etc. with BHEL) or the other legal remedies shall be pursued. iii) wherever the value of security instruments like performance bank guarantee available with BHEL against the said contract is 10% of the contract value or more, such security instruments to the extent of 10% contract value will be encashed. In case no security instruments are available or the value of the security instruments available is less than 10% of the contract value, the 10% of the contract value or the balance amount, as the case may be, will be recovered in all or any of the following manners:	

Signature of supplier with seal

		iv) In case the amount recovered under sub clause (a) above is not sufficient to fulfil the amount recoverable then; a demand notice to deposit the balance amount within 30 days shall be issued to Supplier/Vendor. v) If Supplier/Vendor fails to deposit the balance amount within the period as prescribed in demand notice, following action shall be taken for recovery of the balance amount: a) from dues available in the form of Bills payable to defaulted Supplier/Vendor against the same contract. b) If it is not possible to recover the dues available from the same contract or dues are insufficient to meet the recoverable amount, balance amount shall be recovered from any money(s) payable to Supplier/Vendor under any contract with other Units of BHEL including recovery from security deposits or any other deposit available in the form of security instruments of any kind against Security deposit or EMD. vi) In-case recoveries are not possible with any of the above available options, Legal action shall be initiated for recovery against defaulted supplier/Vendor. vii) It is an agreed term of contract that this amount shall be a genuine pre-estimate of damages that BHEL would incur in completion of balance contractual obligation of the contract through any other agency and BHEL will not be required to furnish any other evidence to the Supplier/Vendor for the purpose of estimation of damages. viii) In addition to the above, imposition of liquidated damages, debarment, termination, de-scoping, short-closure, etc., shall be applied as per provisions of the contract. Note: 1) The defaulting Supplier/Vendor shall not be eligible for participation in any of the future enquiries floated by BHEL to complete the balance work. The defaulting contractor shall mean and include: (a) In case defaulted Supplier/Vendor is the Sole Proprietorship Firm, any Sole Proprietorship Firm owned by same Sole Proprietor. (b) In case defaulted Supplier/Vendor is The Partnership Firm, any firm comprising of same partners/ some of the same partners; or sole proprietorship firm owned by any partner(s) as a sole proprietor.	
21.	**Suspension of Business Dealings with Suppliers / Contractors:**	The offers of the bidders who are under suspension as also the offers of the bidders, who engage the services of the banned firms / principal / agents, shall be rejected. The list of banned firms is available on BHEL web site www.bhel.com. If any bidder / supplier / contractor during pre-tendering / tendering / post tendering / award / execution / post-execution stage indulges in any act, including but not limited to, mal-practices, cheating, bribery, fraud or and other misconduct or formation of cartel so as to influence the bidding process or influence the price or tampers the tendering process or acts or omits in any manner which tantamount to an offence punishable under any provision of the Indian Penal Code, 1860(Bhartiya Nyaya Samhita 2023) or any other law in force in India, or does anything which is actionable under the Guidelines for Suspension of Business dealings, action may be taken against such bidder / supplier / contractor as per extant guidelines of the company available on www.bhel.com and / or under applicable legal provisions. Guidelines for suspension of business dealings is available in the webpage: http://www.bhel.com/vender_registration/vender.php.	
22.	**CONFLICT OF INTEREST AMONG BIDDERS/ AGENTS**	A bidder shall not have conflict of interest with other bidders. Such conflict of interest can lead to anti-competitive practices to the detriment of Procuring Entity's interests. The bidder found to have a conflict of interest shall be disqualified. A bidder may be considered to have a conflict of interest with one or more parties in this bidding process, if: a) they have controlling partner (s) in common; or b) they receive or have received any direct or indirect subsidy/ financial stake from any of them; or c) they have the same legal representative/agent for purposes of this bid; or d) they have relationship with each other, directly or through common third parties, that puts them in a position to have access to information about or influence on the bid of another Bidder, or e) Bidder participates in more than one bid in this bidding process. Participation by a Bidder in more than one Bid will result in the disqualification of all bids in which the parties are involved. However, this does not limit the inclusion of the components/ sub-assembly/ Assemblies from. one bidding manufacturer in more than one bid; or f) In cases of agents quoting in offshore procurements, on behalf of their principal manufacturers, one agent cannot represent two manufacturers or quote on their behalf in a particular tender enquiry. One manufacturer can also authorise only one agent/dealer. There can be only one bid from the following: 1. The principal manufacturer directly or through one Indian agent on his behalf; and 2. Indian/foreign agent on behalf of only one principal, · or g) A Bidder or any of its affiliates participated as a consultant in the preparation of the design or technical specifications of the contract that is the subject of the Bid, or h) In case of a holding company having more than one independently manufacturing units, or more than one unit having common business ownership/management, only one unit should quote. Similar restrictions would apply to closely related sister companies. Bidders must proactively declare such sister/ common business/ management units in same/ similar line of business. "	
23.	**MICRO AND SMALL ENTERPRISES (MSE):**	Any Bidder falling under MSE category shall furnish the following details & submit documentary evidence/ Govt. Certificate etc. in support of the same along with their techno-commercial offer.	

Signature of supplier with seal

		<table><tr><td>Type under MSE</td><td>SC/ST owned</td><td>Women owned</td><td>Others (excluding SC/ ST & Women Owned)</td></tr><tr><td>Micro</td><td></td><td></td><td></td></tr><tr><td>Small</td><td></td><td></td><td></td></tr></table> Note: If the bidder does not furnish the above, offer shall be processed construing that the bidder is not falling under MSE category. a) MSE suppliers can avail the intended benefits in respect of the procurements related to the Goods and Services only (Definition of Goods and Services as enumerated by Govt. of India vide Office Memorandum F. No. 21(8)/2011-MA dtd. 09/11/2016 office of AS & DC, MSME) only if they submit along with the offer, attested copies of either Udyam Registration. Date to be reckoned for determining the deemed validity will be the last date of Technical Bid submission. Non-submission of supporting document in GeM portal will lead to consideration of their bids at par with other bidders. No benefits shall be applicable for this enquiry if the above required documents are not uploaded at the time of bid submission. Documents submitted by the bidder shall be verified by BHEL for rendering the applicable benefits.	
24.	**JURISDICTION:**	This contract shall be governed by the Law for the time being in force in the Republic of India. Subject to clause(s) mentioned above of this contract, the Civil Court having original Civil Jurisdiction at Haridwar shall alone have exclusive jurisdiction in regard to all matters in respect of the Contract.	
25.	**Force Majeure**	"Force Majeure" shall mean circumstance which is: a) beyond control of either of the parties to contract, b) either of the parties could not reasonably have provided against the event before entering into the contract, c) having arisen, either of the parties could not reasonably have avoided or overcome, and d) is not substantially attributable to either of the parties And Prevents the performance of the contract, Such circumstances include but shall not be limited to: i) War, hostilities , invasion, act of foreign enemies. ii) Rebellion, terrorism, revolution, insurrection, military or usurped power, or civil war. iii) Riot, commotion or disorder by persons other than the contractor's personnel and other employees of the contractor and sub-contractors. iv) Strike or lockout not solely involving the contractor's personnel and other employees of the contractor and sub-contractors. v) Encountering munitions of war, explosive materials, ionizing radiation or contamination by radio-activity, except as may be attributable to the contractor's use of such munitions, explosives, radiation or radio- activity. vi) Natural catastrophes such as earthquake, tsunami, volcanic activity, hurricane or typhoon, flood, fire, cyclones etc. vii) Epidemic, pandemic etc. The following events are explicitly excluded from Force Majeure and are solely the responsibilities of the non-performing party: a) any strike, work-to-rule action, go slow or similar labour difficulty (b) late delivery of equipment or material (unless caused by Force Majeure event) and (c) economic hardship. If either party is prevented, hindered or delayed from or in performing any of its obligations under the Contract by an event of Force Majeure, then it shall notify the other in writing of the occurrence of such event and the circumstances thereof within 15 (fifteen) days after the occurrence of such event. The party who has given such notice shall be excused from the performance or punctual performance of its obligations under the Contract for so long as the relevant event of Force Majeure continues and to the extent that such party's performance is prevented, hindered or delayed. The Time for Completion shall be extended by a period of time equal to period of delay caused due to such Force Majeure event. Delay or non-performance by either party hereto caused by the occurrence of any event of Force Majeure shall not i) Constitute a default or breach of the Contract. ii) Give rise to any claim for damages or additional cost expense occasioned thereby, if and to the extent that such delay or non-performance is caused by the occurrence of an event of Force Majeure. BHEL at its discretion may consider short closure of contract after 1 year of imposition of Force Majeure in line with extant guidelines. In any case, Supplier/Vendor cannot consider deemed short-closure after 1 year of imposition of Force Majeure	
26.	**Cartel Formation**	The Bidder declares that they will not enter into any illegal or undisclosed agreement or understanding, whether formal or informal with other Bidder(s). This applies in particular to prices, specifications, certifications, subsidiary contracts, submission or non-submission of bids or any other actions to restrict competitiveness or to introduce cartelization in the bidding process. In case, the Bidder is found having indulged in above activities, suitable action shall be taken by BHEL as per extant policies/ guidelines.	
27.	**Fraud Prevention Policy:**	Bidder along with its associate /collaborators /sub-contractors /sub-vendors / consultants / service providers shall strictly adhere to BHEL Fraud Prevention Policy displayed on BHEL website http://www.bhel.com and shall immediately bring to the notice of BHEL Management about any fraud or suspected fraud as soon as it comes to their notice.	
28.	**Order of Precedence:**	In the event of any ambiguity or conflict between the Tender Documents, the order of precedence shall be in the order below: a. Amendments/Clarifications/Corrigenda etc. issued in respect of the tender documents by BHEL. b. Buyer Added Bid Specific ATC	

Signature of supplier with seal

		c. GeM Bid Technical Conditions of Contract (TCC) d. GeM GTC	
29.	**Contact details**	Please provide 2 Nos of contact details (email id and contact no.) for clarifications. 1…… 2……..	
30.	**Note**:	Please provide your remarks/ confirmations for all clauses/ column. Any blank column submitted by vendor shall be treated as confirmed by them.	

31. PQR:

BHARAT HEAVY ELECTRICALS LIMITED, HARIDWAR
Control & Instrumentation Engineering (CIE)

PRE-QUALIFICATION REQUIREMENT Pressure Transmitters (Gauge PT/DPT) Specification: ST48010	Document No- CIE/PT/ /Turbine /20244171 R01 Date: 10/04/2025

A. **Indent** No.: 20244171 Rev 01
B. **Application**: Pressure Transmitters (Gauge PT/DPT/ Abs PT) are required for various Pressure measurements in Thermal power plant

Sr. No.	PRE-QUALIFICATION REQUIREMENTS	VENDOR RESPONSE
1.	Bidder shall be the manufacturer or authorized supplier of OEM of Pressure Transmitters. Accordingly, any legal document or Letter of authorization shall be submitted respectively in support of this.	
2.	Bidder must have successfully supplied at least 100 or more pressure transmitters in last 7 years from date of enquiry. Bidder needs to furnish un-priced copy of purchase order (PO) in support of above and furnish data in following format. (Project/ Customer Name) | PO ref no. & date | (Pressure Transmitter range) | Qty. | Contact details of customer (email and/or phone number, etc.) | | | | |	
3.	Bidder to confirm that offered model series of transmitters have been successfully operational in Power plants/refineries/etc. for at least 1 year, in at least two projects. Bidder to submit Unpriced PO copies and supporting document (Performance Certificate, if BHEL PO is not available) in support of same. The supporting documents shall not be older than 7 years from date of enquiry.	
4.	Bidders who are supplying offered model series to BHEL Haridwar for the first time will have to provide extended warranty of 2 years over and above specification requirement. Bidder to confirm.	
5.	General technical requirements shall be as below. Bidder to confirm against each point: - TECHNICAL REQUIREMENTS: - a) Type of transmitter : SMART microprocessor based ,2 Wire 24V DC,+/-10% b) Sensor type : Capacitance/Inductive/Silicone resonance c) Output signal range : 4-20mA DC with digital communication (HART protocol) d) Accuracy : 0.060% of calibrated span e) Response time : <150 mSec f) Protection : IP67 g) Local indication : Required h) Diagnostics : Self Indicating feature i) Wetted parts : SS316 j) Electrical connection : 3 Pin Plug Connector k) Process connection : G1/2 " Male (Bottom entry)	
6.	Bidder to provide catalogue of offered items in support of technical specification along with addendum (if applicable).	
7.	Bidders will be required to submit Type test reports at the time of technical evaluation.	
8.	Bidders will be required to submit certification for SIL2, as applicable at the time of technical evaluation.	

Note: Bidder to confirm specific compliance wherever asked. BHEL reserves the right to verify information submitted by Bidder. In case the information is found false/ incorrect/ incomplete, the offer shall be rejected.	

Worked by	Reviewed & Approved by
10/04/25	10/04/25
A. Srivastava/ Dy. Manager	Sheetal Singh / Sr. Manager

Signature of supplier with seal

ANNEXURE – 12

DECLARATION REGARDING MINIMUM LOCAL CONTENT IN LINE WITH

REVISED PUBLIC PROCUREMENT (PREFERENCE TO MAKE IN INDIA), ORDER 2017 DATED 04TH JUNE, 2020 AND SUBSEQUENT ORDER(S)

(To be typed and submitted in the Letter Head of the Entity/Firm providing certificate as applicable)

To,

(Write Name & Address of Officer of BHEL inviting the Tender)

Dear Sir,

Sub: Declaration reg. minimum local content in line with Public Procurement (Preference to Make in India), Order 2017-Revision, dated 04th June, 2020 and subsequent order(s).

Ref: 1) GeM Bid Specification No: ……
2) All other pertinent issues till date

We hereby certify that the items/works/services offered by…… *(specify the name of the organization here)* has a local content of _____ % and this meets the local content requirement for **'Class-I local supplier' / 'Class II local supplier' **** as defined in Public Procurement (Preference to Make in India), Order 2017-Revision dated 04.06.2020 issued by DPIIT and subsequent order(s).

The details of the location(s) at which the local value addition is made are as follows:

1. _____ 2. _____

3. _____ 4. _____

…

Thanking you,
Yours faithfully,

(Signature, Date & Seal of
Authorized Signatory of the Bidder)

** - *Strike out whichever is not applicable.*

Note:

1. Bidders to note that above format, duly filled & signed by authorized signatory, shall be submitted along with the techno-commercial offer.
2. In case the bidder's quoted value is in excess of Rs. 10 crores, the authorized signatory for this declaration shall necessarily be the statutory auditor or cost auditor of the company (in the case of companies) or a practising cost accountant or practicing chartered accountant (in respect of suppliers other than companies).
3. In the event of false declaration, actions as per the above order and as per BHEL Guidelines shall be initiated against the bidder.

Signature of supplier with seal

Lar/T - R-1

BHARAT HEAVY ELECTRICALS LIMITED, HARIDWAR

Control & Instrumentation Engineering (CIE)

PRE-QUALIFICATION REQUIREMENT

Pressure Transmitters (Gauge PT/DPT) Specification: ST48010

Document No- CIE/PT/ /Turbine /20244171 R01
Date: 10/04/2025

A. **Indent** No.: 20244171 Rev 01
B. **Application**: Pressure Transmitters (Gauge PT/DPT/ Abs PT) are required for various Pressure measurements in Thermal power plant

Sr. No.	PRE-QUALIFICATION REQUIREMENTS	VENDOR RESPONSE
1.	Bidder shall be the manufacturer or authorized supplier of OEM of Pressure Transmitters. Accordingly, any legal document or Letter of authorization shall be submitted respectively in support of this.	
2.	Bidder must have successfully supplied at least 100 or more pressure transmitters in last 7 years from date of enquiry. Bidder needs to furnish un-priced copy of purchase order (PO) in support of above and furnish data in following format. (Project/ Customer Name) | PO ref no. & date | (Pressure Transmitter range) | Qty. | Contact details of customer (email and/or phone number, etc.) | | | | |	
3.	Bidder to confirm that offered model series of transmitters have been successfully operational in Power plants/refineries/etc. for at least 1 year, in at least two projects. Bidder to submit Unpriced PO copies and supporting document (Performance Certificate, if BHEL PO is not available) in support of same. The supporting documents shall not be older than 7 years from date of enquiry.	
4.	Bidders who are supplying offered model series to BHEL Haridwar for the first time will have to provide extended warranty of 2 years over and above specification requirement. Bidder to confirm.	
5.	General technical requirements shall be as below. Bidder to confirm against each point: - TECHNICAL REQUIREMENTS: - a) Type of transmitter : SMART microprocessor based ,2 Wire 24V DC,+/-10% b) Sensor type : Capacitance/Inductive/Silicone resonance c) Output signal range : 4-20mA DC with digital communication (HART protocol) d) Accuracy : 0.060% of calibrated span e) Response time : <150 mSec f) Protection : IP67 g) Local indication : Required h) Diagnostics : Self Indicating feature i) Wetted parts : SS316 j) Electrical connection : 3 Pin Plug Connector k) Process connection : G1/2 " Male (Bottom entry)	
6.	Bidder to provide catalogue of offered items in support of technical specification along with addendum (if applicable).	
7.	Bidders will be required to submit Type test reports at the time of technical evaluation.	
8.	Bidders will be required to submit certification for SIL2, as applicable at the time of technical evaluation.	

Note: Bidder to confirm specific compliance wherever asked. BHEL reserves the right to verify information submitted by Bidder. In case the information is found false/ incorrect/ incomplete, the offer shall be rejected.	

Worked by	Reviewed & Approved by
10/04/25	10/04/25
A. Srivastava/ Dy. Manager	Sheetal Singh / Sr. Manager

MANUFACTURER'S NAME AND ADDRESS			STANDARD QUALITY PLAN			TO BE FILLED BY BHEL	TO BE FILLED BY BHEL
BHEL	VENDOR'S NAME	ITEM	**Pressure/ Differential Pressure/ Flow Transmitter**	QP NO.	QA/BE/QP/902		
				REV.	12		
		DRG. NO.	AS PER PO				
		REV	AS per PO				
		SPEC.	AS per PO				
		REV	AS per PO		Page 1 of 3		

SL. NO.	COMPONENT & OPERATIONS	CHARACTERISTICS	CLASS	TYPE OF CHECK	QUANTUM OF CHECK	REFERENCE DOCUMENT	ACCEPTANCE NORMS	FORMAT OF RECORDS	D	AGENCY M	AGENCY B	AGENCY N	REMARKS
1	2	3	4	5	6	7	8	9		10			11
1.00	**RAW MATERIAL**												
1.01	Diaphragm, Sensing, Housing & Process Connections (As applicable)	Grade of Material	Major	Chemical	1 Sample / lot	Ordering specn./ BHEL Appd Data Sheet	Ordering specn./ BHEL Appd Data Sheet	COC	√	P	V	-	
1.02	Flange & Wetting Part (As applicable)	Grade of Material	Major	Chemical	1 Sample / lot	Ordering specn./ BHEL Appd Data Sheet	Ordering specn./ BHEL Appd Data Sheet	COC	√	P	V	-	
1.03	Electronic & Other Components (As applicable)	Visual, Make, Range, Type / Model No., Sl. No. & Electric Connection (Plug & Socket Type)	Major	Visual	100%	Ordering specn. / Vendor STD	Ordering specn. / Vendor STD	Internal records	-	P	V	-	
2.00	**IN-PROCESS INSPECTION**												
2.01		Soundness of fitting, Connection & Terminal Marking	Major	Visual	100%	Ordering specn./ BHEL Appd Data Sheet	Ordering specn./ BHEL Appd Data Sheet	Internal records	-	P	-	-	
2.02		Insulation Resistance & Dielectric strength	Major	Electrical	100%	Ordering specn./ BHEL Appd Data Sheet	Ordering specn./ BHEL Appd Data Sheet	Internal records	-	P	-	-	
3.00	**TYPE TESTS**												NOTE-1
4.00	**ROUTINE TESTS**												NOTE-3
4.01		Visual (Input / Output Range, Make, Rating, Type / Model No./ Sl No.) & Dimensions	Major	Visual / Measurement	100%	Ordering specn./ BHEL Appd Data Sheet	Ordering specn./ BHEL Appd Data Sheet	Test Report*	√	P	W	-	

MANUFACTURER/SUBCONTRACTOR		LEGEND: ! RECORDS IDENTIFIED WITH 'TICK' SHALL BE ESSENTIALLY INCLUDED BY CONTRACTOR IN QA DOCUMENTATION. M: MANUFACTURER / SUBCONTRACTOR B: BHEL / NOM. INSPECTION AGENCY N: CUSTOMER INDICATE 'P' PERFORM 'W' WITNESS AND 'V' VERIFICATION ALL 'W' INDICATED IN COLUMN 'N' SHALL BE 'CHP' OF CUSTOMER	FOR CUSTOMER USE	APPROVED BY Digitally signed by Sachin Jain Date: 2020.06.15 08:56:38 +05'30'

MANUFACTURER'S NAME AND ADDRESS			STANDARD QUALITY PLAN			TO BE FILLED BY BHEL	TO BE FILLED BY BHEL
BHEL	VENDOR'S NAME	ITEM	**Pressure/ Differential Pressure/ Flow Transmitter**	QP NO.	QA/BE/QP/902		
				REV.	12		
		DRG. NO.	AS PER PO				
		REV	AS per PO				
		SPEC.	AS per PO				
		REV	AS per PO		Page 2 of 3		

SL. NO.	COMPONENT & OPERATIONS	CHARACTERISTICS	CLASS	TYPE OF CHECK	QUANTUM OF CHECK	REFERENCE DOCUMENT	ACCEPTANCE NORMS	FORMAT OF RECORDS		AGENCY M	AGENCY B	AGENCY N	REMARKS
1	2	3	4	5	6	7	8	9	D	10			11
4.02		Mechanical Process Connections & Electrical Connections	Major	Visual / Measurement	100%	Ordering specn./ BHEL Appd Data Sheet	Ordering specn./ BHEL Appd Data Sheet	Test Report*	√	P	W	-	
4.03		Accuracy / Calibration Repeatability	Major	Electrical	100%	Ordering specn./ BHEL Appd Data Sheet	Ordering specn./ BHEL Appd Data Sheet	Test Report*	√	P	W	-	
4.04		Span and Zero Adjustability / Adjustability of Range	Major	Physical	100%	Ordering specn./ BHEL Appd Data Sheet	Ordering specn./ BHEL Appd Data Sheet	Test Report*	√	P	W	-	
4.06		Over Pressure Limit & Pressure Range versus Output Signal Test.	Major	Pressure	100%	Ordering specn./ BHEL Appd Data Sheet	Ordering specn./ BHEL Appd Data Sheet	Test Report*	√	P	W	-	
4.07		Power Supply Voltage Effect (As Applicable)	Major	Electrical	100%	Ordering specn./ BHEL Appd Data Sheet	Ordering specn./ BHEL Appd Data Sheet	Test Report*	√	P	W	-	
4.08		Insulation Resistance (If Applicable)	Major	Electrical	100%	Ordering specn./ BHEL Appd Data Sheet	Ordering specn./ BHEL Appd Data Sheet	Test Report*	√	P	W	-	
4.09	Completeness of TCs, COCs, & Inspection Reports		Major	Physical	100%	Ordering specn./ BHEL Appd Data Sheet	Ordering specn./ BHEL Appd Data Sheet	Documents	√	P	V	-	
5.00	**IDENTIFICATION / MARKING & PACKING**												
5.01		Identification Marking / Firmness of Tagging of Each Instrument	Major	Visual	100%	Ordering specn./ BHEL Appd Data Sheet	Ordering specn./ BHEL Appd Data Sheet	Internal Records		P	W	-	

MANUFACTURER/SUBCONTRACTOR		LEGEND: ! RECORDS IDENTIFIED WITH 'TICK' SHALL BE ESSENTIALLY INCLUDED BY CONTRACTOR IN QA DOCUMENTATION. M: MANUFACTURER / SUBCONTRACTOR B: BHEL / NOM. INSPECTION AGENCY N: CUSTOMER INDICATE 'P' PERFORM 'W' WITNESS AND 'V' VERIFICATION ALL 'W' INDICATED IN COLUMN 'N' SHALL BE 'CHP' OF CUSTOMER	FOR CUSTOMER USE	APPROVED BY

Digitally signed by Sachin Jain
Date: 2020.06.15 08:56:54 +05'30'

MANUFACTURER'S NAME AND ADDRESS			STANDARD QUALITY PLAN			TO BE FILLED BY BHEL	TO BE FILLED BY BHEL
BHEL	VENDOR'S NAME	ITEM	**Pressure/ Differential Pressure/ Flow Transmitter**	QP NO.	QA/BE/QP/902		
				REV.	12		
		DRG. NO.	AS PER PO				
		REV	AS per PO				
		SPEC.	AS per PO				
		REV	AS per PO		Page 3 of 3		

SL. NO.	COMPONENT & OPERATIONS	CHARACTERISTICS	CLASS	TYPE OF CHECK	QUANTUM OF CHECK	REFERENCE DOCUMENT	ACCEPTANCE NORMS	FORMAT OF RECORDS		AGENCY			REMARKS
										M	B	N	
1	2	3	4	5	6	7	8	9	D	10			11
5.02		Soundness of Packing Against Transit Damage	Major	Physical	100%	Ordering Specn./ BHEL Appd Data Sheet/ Vendor's STD	Ordering specn./ BHEL Appd Data Sheet	Internal Records		P	-	-	

Note:

1. Type tests clearance from BHEL Engineering to be verified by inspection engineer during inspection at vendor's works.
2. Manufacturer to maintain calibrated instruments having better accuracy than the item under the test. Inspection engineer shall check the same.
3. Witness by inspection agency to be random 10% of each material code(minimum 1 pieces per material code) from each lot. However vendor to carry out 100% tests internally and tests report shall be reviewed by inspection engineer during inspection at Vendor's works.
4. For material code having applicable spec ST48010, Transmitter shall be supplied with bracket for panel mounting along with necessary fasteners as per cl. no.-5.7 of BHEL spec. ST48010.

MANUFACTURER/SUBCONTRACTOR		LEGEND: ! RECORDS IDENTIFIED WITH 'TICK' SHALL BE ESSENTIALLY INCLUDED BY CONTRACTOR IN QA DOCUMENTATION. M: MANUFACTURER / SUBCONTRACTOR B: BHEL / NOM. INSPECTION AGENCY N: CUSTOMER INDICATE 'P' PERFORM 'W' WITNESS AND 'V' VERIFICATION ALL 'W' INDICATED IN COLUMN 'N' SHALL BE 'CHP' OF CUSTOMER	FOR CUSTOMER USE	APPROVED BY

Digitally signed by Sachin Jain
Date: 2020.06.15 08:57:10 +05'30'

FIRST ANGLE PROJECTION | (ALL DIMENSIONS ARE IN mm) FORM DG 39(B)

REV	DATE	ALTERED / CHECKED	REV	DATE	ALTERED / CHECKED	CBOM No.	STATUS OF DRG
			01	10.04.25	ALTERED BLR / CHECKED ASHUTOSH	----------	

VAR. NO. 15 NEW ADDED AS PER CHANGE NO. STE-25-F0086.

AGREED DEPT.	NAME	SIGN	DATE
----	----	----	

GRADE OF UNTOL.DIM.M/CGC/M/F.AA0230208 | WELDING A/B/C/D AA0621104 | GAS CUTTING-T3 AA0621101

TABLE-1

VAR.NO.	DESCRIPTION	MAT. CODE NO	REMARK
00	PRESS. TRANSMITTER (0-80 BAR)	W97372652464	SIL2
01	PRESS. TRANSMITTER (0-16 BAR)	W97372652472	SIL2
02	PRESS. TRANSMITTER (-1) TO (+79)BAR	W97372652480	SIL2
03	DPT (-10) TO (+90) MBAR	W97372652499	SIL2
04	PRESS. TRANSMITTER 0-10BAR(ABS)	W97372652502	SIL2
05	PRESS. TRANSMITTER 0-1.3BAR,ABS	W97372652510	SIL2
06	FLOW TRANSMITTER 0-1800MBAR	W97372652529	SIL2
07	PRESS. TRANSMITTER (-1)TO(+3)BAR	W97372652537	SIL2
08	PRESS. TRANSMITTER (-1)TO(+9)BAR	W97372652545	SIL2
09	PRESS. TRANSMITTER (-1)TO(+39)BAR	W97372652553	SIL2
10	PRESS. TRANSMITTER (-1)TO(+19)BAR	W97372652561	SIL2
11	PRESS. TRANSMITTER 0-400 BAR	W97372652570	SIL2
12	PRESS. TRANSMITTER (-)1 TO (+399)BAR	W97372652588	SIL2
13	PRESS. TRANSMITTER (-) 1 TO(+50) BAR	W97372652596	SIL2
14	PRESS. TRANSMITTER 0-110 BAR	W97372652600	SIL2
15	PRESS. TRANSMITTER (-1) TO (+109) BAR	W97372652618	SIL2

TABLE-2

RANGE	ACCURACY (FOR CALIBRATED RANGE)	TURNDOWN (FOR SPAN)	STABILITY (% OF CALIBRATED RANGE)
<=400mmwc	0.1%	20:1	+/-0.2% FOR 1 YEAR
>400mmwc	0.060%	50:1	+/-0.25% FOR 10 YEAR
>250kg/cm2	0.065%	10:1	+/-0.15% FOR 5 YEAR

TECHNICAL REQUIREMENTS:-

1 - BHEL MATERIAL CODE AS PER TABLE-1.
2 - ACCURACY, TURNDOWN AND STABILITY AS PER TABLE-2.
3 - SPECIFICATION NO. ST48010.
4 - BHEL / CUSTOMER APPROVAL REQUIRED ON COPY OF TYPE TEST.

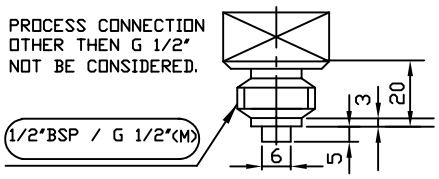

COPYRIGHT AND CONFIDENTIAL
THE INFORMATION ON THIS DOCUMENT IS THE PROPERTY OF BHARAT HEAVY ELECTRICALS LIMITED. IT MUST NOT BE USED DIRECTLY OR INDIRECTLY IN ANY WAY DETRIMENTAL TO THE INTEREST OF THE COMPANY.

REF.DRG.No.

SIGN & DATE

BHARAT HEAVY ELECTRICALS LTD
HARDWAR

	NAME	SIGN	DATE	NO. OF VAR
DRN	SSTEBLR1	SSTEBLR1	01/02/2025	
CHD	SSTEAS2	SSTEAS2	01/02/2025	
APD	ASTESS	ASTESS	04/02/2025	

INVENTORY No.

DEPT.STE	SCALE	WEIGHT(Kg)	REF.TO ASSY.DRG.	ITEM No.	No OF ITEMS
CODE 4011	N.T.S.	119	4133768810 1	--	--

TITLE
PRESSURE TRANSMITTERS

DRAWING No. 4133768810 1

SHEET No. 1 | No.OF SHEETS 1

2x660 MW Talcher and 2X 800 MW Lara (LIST OF PT/DPT/HHC)

Sl. No.	MATERIAL CODE	Type	RANGE	KKS TAG	MAIN QUANTITY PER UNIT	Total MANDATORY SPARE QUANTITY Talcher	Total MANDATORY SPARE QUANTITY Lara
1	W97372652570	PT	0-400 bar	MAA12CP021	6	2	2
				LBA11CP004			
				LBA11CP005			
				LBA12CP004			
				LBA12CP005			
				MAA14CP021			
2	W97372652618	PT	-1 TO 109 bar	LBQ90CP001	1	1	1
3	W97372652464	PT	0-80 bar	LBB11CP004	8	2	2
				LBB11CP005			
				LBB12CP004			
				LBB12CP005			
				LBB21CP001			
				LBB21CP002			
				LBB22CP001			
				LBB22CP002			
4	W97372652472	PT	0-16 bar	LBG30CP011	3	1	1
				LBG30CP012			
				QFB01CP001			
5	W97372652588	PT	-1 TO 399 bar	MAA50CP001	3	1	1
				MAA50CP002			
				MAA50CP003			
6	W97372652480	PT	-1 TO 79 bar	LBC10CP001	5	1	1
				LBC10CP002			
				LBC10CP003			
				MAB50CP001			
				MAB50CP002			
7	W97372652596	PT	-1 TO 50 bar	MAN52CP011	2	1	1
				MAN55CP011			
8	W97372652553	PT	-1 TO 39 bar	LBQ70CP001	1	1	1
9	W97372652561	PT	-1 TO 19 bar	LBQ60CP001	2	1	1
				LBS50CP001			
10	W97372652545	PT	-1 TO 9 bar	LBS40CP001	1	1	1
11	W97372652537	PT	-1 TO 3 bar	LBS30CP001	1	1	1
12	W97372652502	Absolute PT	0-10 abs	MAC11CP001	3	1	1
				MAC11CP002			
				MAC11CP003			

Sl. No.	MATERIAL CODE	Type	RANGE	KKS TAG	MAIN QUANTITY PER UNIT	Total MANDATORY SPARE QUANTITY Talcher	Total MANDATORY SPARE QUANTITY Lara
13	W97372652510	Absolute PT	0-1.3 barabs	MAG10CP002	12	3	3
				MAG10CP003			
				MAG10CP004			
				MAG10CP012			
				MAG10CP013			
				MAG10CP014			
				MAG20CP002			
				MAG20CP003			
				MAG20CP004			
				MAG20CP012			
				MAG20CP013			
				MAG20CP014			
14	W97372652529	Flow Transmitter	0-1800 mbar	MAN53CF001	6	2	2
				MAN53CF002			
				MAN53CF003			
				MAN56CF001			
				MAN56CF002			
				MAN56CF003			
15	W97372652499	DPT	-10 TO 90 mbar	MAW20CP001	2	1	1
				MAW20CP002			
16	W90313376050	HAND HELD COMMUNICATOR	-	-	1	NA	NA

NOTE: TAG PLATES SHOULD BE PUNCHED WITH THE KKS TAG GIVEN IN THE LIST. THE TAG NAME SHOULD BE INDELIABLE. TAG PLATE TO BE TIED ON THE TRANSMITTER WITH THE HELP OF A WIRE.

-sd-
Ahutosh Srivastava
Dy. Manager /CIE

-sd-
Sheetal Singh
Sr. Mgr/CIE

दिनांक एवं हस्ताक्षर SIGN & DATE

SUPERSEDES INVENTORY NO.

सामग्री सूची संख्या को अधिक्रमित करता है

COPYRIGHT AND CONFIDENTIAL
The information on this documents is the property of Bharat Heavy Electrical Limited.It must not be used directly or indirectly in any way detrimental to the interest of the company

स्वत्वाधिकार एवं गोपनीय
इस प्रलेख में दी गई सूचना भारत हैवी इलैक्ट्रिकल्स की सम्पत्ति है इसका प्रत्यक्ष एवं अप्रत्यक्ष रूप से किसी भी तरह प्रयोग, जो कि कंपनी के हित में हानिकारक हो न किया जाए।

PRESSURE/DIFFERENTIAL PRESSURE TRANSMITTER/ TRANSMITTER FOR FLOW (SMART TYPE)

1.0 SCOPE:

This specification covers the technical requirements of Electronic Pressure Transmitter used for gauge pressure, absolute pressure, differential pressure and flow measurements. The transmitter shall be complete with sensing element, amplifier etc. To suit the input pressure, output signal range, power supply and other technical requirements.

1.1 APPLICATION:

It shall be suitable for power plant applications for steam water and oil services. The transmitter shall be of proven performance & highest reliability.

1.2 DESIGNATION:

A pressure transmitter to this standard of range 0-025 Kg/Cm2 and size no. 005 shall be designated as follows :

On Drawing

i) Drg. No. Column : ST 48010.007
ii) Description Column : Press. Transmitter 0-025 Kg/Cm2
iii) Material Specification column : ST 48010
iv) Material Code column : W97372651069

For placing Purchase Indents:

i) Pressure transmitter 0-025 Kg/Cm2. ST 48010.005

2.0 COMPLIANCE WITH NATIONAL STANDARD:

There is no Indian standard on the above subject.However assistance has been taken from BS6447 and data sheets of various Manufacturers.

दिनांक एवं हस्ताक्षर SIGN & DATE
सामग्री सूची संख्या को अधिक्रमित करता है SUPERSEDES INVENTORY NO.
COPYRIGHT AND CONFIDENTIAL
The information on this documents is the property of Bharat Heavy Electrical Limited.It must not be used directly or indirectly in any way detrimental to the interest of the company
स्वत्वाधिकार एवं गोपनीय
इस प्रलेख में दी गई सूचना भारत हैवी इलेक्ट्रिकल्स की सम्पत्ति है इसका प्रत्यक्ष एवं अप्रत्यक्ष रूप से किसी भी तरह प्रयोग, जो कि कंपनी के हित में हानिकारक हो न किया जाए।
हस्ताक्षर एवं दिनांक SIGN & DATE

3.0 TECHNICAL REQUIREMENTS

3.1 MEASURING PRINCIPLE :

Variable capacitance or any other principle well proven for power plant application involving electromagnetic noise. Bidder shall furnish all details required to establish the provenness.

3.2 TYPE:

The Transmitter shall be intelligent (SMART) two-wire type. It shall have the capability of remote ranging and self-diagnostics and shall be able to communicate digitally with a higher order control system through suitable interfaces.

3.3 OUTPUT:

Linear 4-20mA D.C.with a superimposed digital signal. Digital signal shall be as per latest version of Highway Addressable Remote Transducer (HART) protocol. Digital communication with the transmitter shall in no way affect the analog output.

3.4 POWER SUPPLY:

Transmitter shall be capable of operation at a dc voltage from +15 to +30 Volt. Load-voltage curve shall be furnished along with the offer. Minimum load shall be 600 ohm at 24 V DC

3.5 FIELD COMMUNICATOR:

It shall be possible to diagnose, calibrate and adjust all transmitter parameters from a hand held field communicator and from a remote PC. The field communicator and the PC based configuration software shall be offered as an optional item. Field communicator shall be battery operated.

3.6 DIGITAL COMMUNICATION:

Necessary Protocol and configuration details shall be furnished by the supplier, if desired by BHEL, to establish a digital link with BHEL's DDC system/ PC based configuration station.

3.7 LOCAL ADJUSTMENTS:

Local span and zero adjustments shall also be provided. Which shall be lockable.

3.8 FLOW MEASUREMENT:

If the requirement of Flow Transmitter is specified in the enquiry, The output shall be Square root extracted.

3.9 LOCAL INDICATOR:

Transmitter shall have local digital indication

दिनांक एवं हस्ताक्षर

SUPERSEDES INVENTORY NO.

सामग्री सूची संख्या को अधिक्रमित करता है

COPYRIGHT AND CONFIDENTIAL
The information on this documents is the property of Bharat Heavy Electrical Limited.It must not be used directly or indirectly in any way detrimental to the interest of the company

स्वत्वाधिकार एवं गोपनीय
इस प्रलेख में दी गई सूचना भारत हेवी इलेक्ट्रिकल्स की सम्पत्ति है इसका प्रयोग एवं आदान प्रदान से किसी भी तरह प्रयोग, जो कि कंपनी के हित में हानिकारक हो न किया जाए।

4.0 PERFORMANCE SPECIFICATIONS:

4.1 ACCURACY: ± 0.075% or better of calibrated span (inclusive of hysteresis, linearity & repeatability) at turn down ratio of 10:1 or less.
(For Absolute Pressure Range ± 0.1% or Better)

4.2 ENVIROMENTAL CONDITIONS:

Ambient temp.	: -20 to + 80° C.
Storage temp.	: -20 to +80° C.
Humidity.	: Continuous operation at RH of 95%.

4.3 DRIFT (LONG TERM): Less then ± 0.15 % of span in three years.
(For Absolute Pressure Range Less than ±0.1% of span in one year)

4.4 SUPPLY VOLTAGE EFFECT. : Less than 0.005 % per volt.

4.5 TEMPERATURE EFFECT. : Less than ± 0.05 % of span per 100° C.

4.6 ZERO ELEV.AND SUPPRESS: Anywhere within the range limits maintaining minimum allowable span.

4.7 TURN ON TIME: Max. 10 sec after power is applied to the transmitter.

4.8 DAMPING: Min 0-16 second, selectable in steps.

4.9 VIBRATION EFFECT: +/- 0.2 % of span per g at 200 Hz in any axis.

4.10 RESPONSE TIME: Transmitter response time (63 % as per BS6447) shall be <150 ms. This shall include the dead time. Response time for output to reach 1% of the final value shall also be informed by the supplier.

4.11 OVER RANGE PRESSURE: The Transmitter shall be capable of withstanding the over range pressure as given in BS 6447.

4.12 Transmitter shall be immune to interference from electromagnetic noise. When a 1V, 50 m Hz alternating voltage is superimposed on the o/p signal, the change in mean dc level of output current shall not exceed 0.1% of output span.

4.13 UPDATE TIME: Worst case output update time shall be 50 m sec.

4.14 MOUNTING POSITION EFFECT: Zero shift should be able to be calibrated out by zero adjustment.

हस्ताक्षर एवं दिनांक SIGN & DATE 3/11/04

5.0 PHYSICAL SPECIFICATIONS:

5.1 HOUSING: Cast Aluminum Stoving enamel painted weather proof.

5.2 PROTECTION CLASS: IP 67

5.3 WETTED PARTS: SS 316

5.4 PROCESS CONNECTION: G 1/2" Male. In case an adopter is used to provide G 1/2" connection, it shall be factory fitted on the Transmitter. (REF.FIG.-1,SH-8).

5.5 FLANGE MATERIAL: SS (In case of DPT).

5.6 ELECTRICAL CONNECTION: Three Pin Plug receptacle connector (Amphetronics/Allied make Or equivalent). Male part of the connector will be fixed with the Transmitter.

5.7 MOUNTING BRACKET: Transmitter shall be supplied with bracket for panel mounting along with Necessary fastners to mount the transmitter on the bracket. 04 Nos. mounting studs of size M10x70 With fine threads (material CS) shall be supplied for DPT and Flow transmitters only.

6.0 TURN DOWN RATIO: Minimum turn down ratio shall be 100:1 (for absolute pressure range minimum turn down ratio shall be 25:1). By using turndown ratio of the Transmitter, minimum variety of models shall be selected to cover all the ranges mentioned in the enquiry. It may be noted that specified accuracy is to be maintained for the calibrated rated range in each case.

7.0 IDENTIFICATION TAG: A blank stainless steel tag of size 60x20 mm shall be fastened with each **Transmitter.**

8.0 TESTS: Following tests shall be carried out by the supplier on each transmitter.

8.1 ROUTINE TESTS: **a)** Visual and dimensional check.
b) Pressure range versus output signal test.
c) Accuracy test.
d) Test for adjustability of range.
e) Process and electrical connection.

COPYRIGHT AND CONFIDENTIAL
The information on this documents is the property of Bharat Heavy Electrical Limited.It must not be used directly or indirectly in any way detrimental to the interest of the company

स्वत्वाधिकार एवं गोपनीय
इस प्रलेख में दी गई सूचना भारत हेवी एलेक्ट्रिकल्स लिमिटेड की सम्पत्ति है इसका उपयोग एवं अप्रत्यक्ष रूप से किसी भी तरह प्रयोग जो कि कम्पनी के हित में हानिकारक हो न किया जाए।

SUPERSEDES INVENTORY
मानकी सूची संख्या को अधिक्रमित करता है

SIGN & DATE
दिनांक एवं हस्ताक्षर

दिनांक एवं हस्ताक्षर SIGN & DATE
सामग्री सूची संख्या को अधिक्रमित करता है SUPERSEDES INVENTORY NO.
COPYRIGHT AND CONFIDENTIAL
The information on this documents is the property of Bharat Heavy Electrical Limited.It must not be used directly or indirectly in any way detrimental to the interest of the company
स्वत्वाधिकार एवं गोपनीय
इस प्रलेख में दी गई सूचना भारत हेवी इलेक्ट्रिकल्स की सम्पत्ति है इसका प्रत्यक्ष एवं अप्रत्यक्ष रूप से किसी भी तरह प्रयोग, जो कि कंपनी के हित में हानिकारक हो न किया जाए।

8.2 TYPE TESTS:

IEC 60529

a). Enclosure protection as per A or equivalent national Standard.

b). Test for performance characteristics as per specified in clauses 4.3,4.4,4.5,4.9,4.10,4.11,4.12. Method of tests shall be carried out as per BS 6447.

9.0 TEST CERTIFICATES:

9.1 3 copies of the tests certificate shall be furnished along with each transmitter giving following details:

i) Name of instrument.
ii) Name of manufacturer.
iii) Serial no of the instrument.
iv) Date of testing.
v) BHEL PO NO.
vi) Results of tests detailed in clause 8.0.

9.2 Certificate of compliance to specification ST48010.

10.0 GUARANTEE :

A guarantee certificate of trouble free performance for 24 months from the date of shipment or 12 months from the date of commissioning, which ever is earlier, shall be furnished by the supplier.

11.0 DOCUMENTS:

Data sheet (Mentioning all the clauses 3.0 to 6.0) of offered transmitters shall be furnished by the bidder for BHEL/Owner's approval. Two copies of detail technical literatures, operation and maintenance manuals shall be furnished with the offer .
Complete technical literature is also to be furnished in "SOFT FORM" in a CDROM after placement of order.

12.0 DEVIATIONS:

Deviations from these specifications, if any, shall be clearly brought out in the offer.

13.0 PACKING :

Each instrument with dehydrating agent shall be sealed individually in a polythene sheet and packed in a thermo Cole box. Such boxes shall be packed in a carton or case with adequate cushioning material to withstand transit risks without damage.

14.0 Supplier shall enclose the list of spare parts required for 3 years normal operation and quote for the same separately.

15.0 QUALITY PLAN:

Detail quality plan for the tests and checks to be carried out during material induction, manufacturing and at final stage shall be submitted in BHEL's Format along with in house standard procedures/ norms for BHEL's approval.

16.0 MARKING :

The following details shall be marked on the packing case.

(a) Manufacturer's name or trademark.
(b) B H E L order number.
(c) BHEL standard NO. - ST48010.

17.0 NAME PLATE:

Each instrument shall have a name plate with the Following details marked on it :

(a) Manufacturer's name or trademark.
(b) Type of the Instrument.
(c) Model Number of the Manufacturer.
(d) Maximum Range.
(e) Calibrated Span.
(f) Accuracy.

18.0 CROSS – REFFERED STANDARDS :

(1) IEC 60529
(2) BS 6447

COPYRIGHT AND CONFIDENTIAL
The information on this documents is the property of Bharat Heavy Electrical Limited.It must not be used directly or indirectly in any way detrimental to the interest of the company
स्वत्वाधिकार एवं गोपनीय
इस प्रलेख में दी गई सूचना भारत हेवी इलेक्ट्रिकल्स की सम्पत्ति है इसका प्रत्यक्ष एवं अप्रत्यक्ष रूप से किसी भी तरह प्रयोग, जो कि कंपनी के हित में हानिकारक हो न किया जाए।

दिनांक एवं हस्ताक्षर SIGN & DATE

SUPERSEDES INVENTORY NO.

सामग्री सूची संख्या को अधिक्रमित करता है

COPYRIGHT AND CONFIDENTIAL
The information on this documents is the property of Bharat Heavy Electrical Limited.It must not be used directly or indirectly in any way detrimental to the interest of the company

स्वत्वाधिकार एवं गोपनीय
इस प्रलेख में दी गई सूचना भारत हेवी इलेक्ट्रिकल्स की सम्पत्ति है इसका प्रत्यक्ष एवं अप्रत्यक्ष रूप से किसी भी तरह प्रयोग, जो कि कंपनी के हित में हानिकारक हो न किया जाए।

A. SIZE NO'S.

DESC.	MEASURING RANGE KG/SQ.CM. OR BAR	SIZE NO. IN CASE OF KG/SQ.CM.	SIZE NO. IN CASE OF BAR
01. GAUGE PRESSURE	0-250	001	051
	0-200	002	052
	0-060	003	053
	0-040	004	054
	0-025	005	055
	0-016	006	056
	0-010	007	057
	0-006	008	058
	0-004	009	059
	(-1)-(0)	010	060
	(-1)-(+3)	011	061
	(-1)-(+9)	012	062
	(-0.3)-(-1)	013	063
	0-100	014	064
	0-070	015	065
	0-050	016	066
	(-1)-(+15)	017	067
	(-1)-(+1.5)	018	068
	0-090	019	069
	0-400	020	070
	(-1)-(+80)	021	071
	(-1)-(+30)	022	072
	(-1)-(+10)	023	073

DESC.	MEASURING RANGE KG/SQ.CM. Or BAR	SIZE NO. IN CASE OF KG/SQ.CM.	SIZE NO. IN CASE OF BAR
02. ABSOLUTE PRESSURE (PN-4)	0-0.6 Abs	041	091
	0-0.4 Abs	042	092
	0-1 Abs	043	093
03.DIFFERINTIAL PRESSURE (PN-100)	0-1000 MMWC	031	---
	0-100 M BAR	---	081
	(-100)-(+300) MMWC	032	---
	(-10)-(+30) M BAR	---	082
	(-100)-(+900) MMWC	033	---
	(-10)-(+90) M BAR	---	083
	0-1 BAR	---	084
	0-60 BAR	---	085
04.FLOW (PN-100)	0-0.7	101	111
	0-1.0	102	112

PROCESS CONNECTION OTHER THAN G 1/2 " NOT BE CONSIDERED.

1/2" BSP/G 1/2"(M)

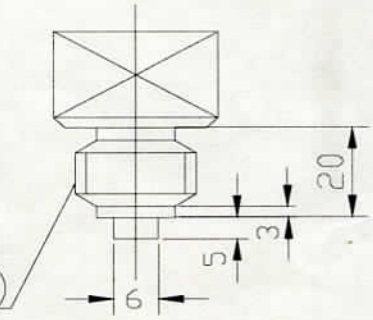

FIG -1

COPYRIGHT AND CONFIDENTIAL
The information on this documents is the property of Bharat Heavy Electrical Limited.It must not be used directly or indirectly in any way detrimental to the interest of the company

स्वत्वाधिकार एवं गोपनीय
इस प्रलेख में दी गई सूचना भारत हैवी इलैक्ट्रिकल्स की सम्पत्ति है इसका प्रत्यक्ष एवं अप्रत्यक्ष रूप से किसी भी तरह प्रयोग, जो कि उसकी के हित में हानिकारक हो, न किया जाए।

REV. NO. 05		निर्माणकर्ता WORKED BY	S.K. SHARMA		21/8/03
		जांचकर्ता CHECKED BY	K.B. BATRA		21.8.03

हस्ताक्षर एवं दिनांक SIGN & DATE 23/8/03

सामग्री सूची संख्या INVENTORY NO. P-5731

सामग्री सूची संख्या को अधिक्रमित करता है SUPERSEDES INVENTORY NO.

दिनांक एवं हस्ताक्षर SIGN & DATE

FIRST ANGLE PROJECTION | (ALL DIMENSIONS ARE IN mm) FORM DG 39(B)

REV	DATE	ALTERED / CHECKED	REV	DATE	ALTERED / CHECKED	GMS No/GRSP No.	STATUS OF DRG
			01	20/9/06	J.S.B. / S.K.S.	CBOM 31337622100	

CHANGE NO.	AGREED DEPT.	NAME	SIGN	DATE
STE-06-F0218				

GRADE OF UNTOL.DIM.M/CGC/M/F.AA0230208 | WELDING A/B/C/D AA0621104 | GAS CUTTING-T3 AA0621101

HAND HELD COMMUNICATOR

HAND HELD COMMUNICATOR SHALL BE COMPATIBLE TO THE SMART TYPE TRANSMITTER WITH HART PROTOCOL. IT SHALL BE POSSIBLE TO CONNECT THE HHC ANY WHERE IN THE TRANSMITTER LOOP FOR CARRYING OUT THE FUNCTIONS AS DIFINED BELOW. CONNECTION OF HHC SHALL NOT DISTURB THE 4–20 mA SIGNAL ANYWAY.

1. HHC SHALL BE UNIVERSAL TYPE WHICH CAN BE USED FOR ANY HART DEVICE AND APPROVED BY HART FOUNDATION. IT SHALL BE SUITABLE FOR LATEST VERSION OF HART PROTOCOL.
2. HHC SHALL BE ABLE TO PERFORM THE FOLLOWING MINIMAM FUNCTIONS.
   - DEVICE SET UP.
   - DIAGNOSTIC MESSAGE DISPLAY.
   - PROCESS VALUE DISPLAY.
   - CHANGE OF ENGINEERING UNITS.
   - LOOP TESTING.
   - RANGE TESTING.
3. POWER SOURCE : SUITABLE DC BATTERIES WITH CHARGER.
4. KEY BOARD : AN ALPHANUMERIC KEY BOARD CONTAINING ALL REQUIRED FUNCTION KEYS.
5. SUITABLE CONNECTORS AND CABLES SHALL BE SUPPLIED BY THE VENDER.
6. OPERATING TEMPERATURE RANGE : 0 to 50 Deg /C
7. STORAGE TEMPERATURE RANGE : 0 to 60 Deg /C
8. ACCESSORY: CARRYING CASE.
9. O & M MANUAL IN ENGLISH LANGUAGE TO BE FURNISHED WITH THE OFFER.

COPYRIGHT AND CONFIDENTIAL
THE INFORMATION ON THIS DOCUMENT IS THE PROPERTY OF BHARAT HEAVY ELECTRICALS LIMITED. IT MUST NOT BE USED DIRECTLY OR INDIRECTLY IN ANY WAY DETRIMENTAL TO THE INTEREST OF THE COMPANY.

REMARKS	ITEM No.	DESCRIPTION	STD	MATERIAL CODE	A	UNIT WT.
	001	HAND HELD COMMUNICATOR		W90313376050		0 50
				–		
			VAR	MATERIAL SPEC.	C	

CARD TYPE 3 | TYPE 1 | CARD TYPE 2

	NAME	SIGN	DATE	NO. OF VAR
DRN	J. S. BHANDARI	-do-	15. 02. 1999	
CHD	S.CHANDRA	-do-	15. 02. 1999	
APD	A. ALI	-do-	08. 03. 1999	

BHARAT HEAVY ELECTRICALS LTD HARDWAR

REF.DRG.No.

16/03/1999 SIGN & DATE

S1-29738 INVENTORY No.

DEPT. STE	SCALE	WEIGHT(Kg)	REF.TO ASSY.DRG.	ITEM No.	No OF ITEMS
CODE 4011	N. T. S.	0. 500	31337622100	15	

TITLE HAND HELD COMMUNICATOR

DRAWING No. 41337622101

SHEET No. 01 | No.OF SHEETS 01

SIZE A4

दिनांक एवं हस्ताक्षर SIGN & DATE

SUPERSEDES INVENTORY NO

सामग्री सूची संख्या को अधिक्रमित करता है

COPYRIGHT AND CONFIDENTIAL
The information on this documents is the property of Bharat Heavy Electrical Limited.It must not be used directly or indirectly in any way detrimental to the interest of the company

स्वत्वाधिकार एवं गोपनीय
इस प्रलेख में दी गई सूचना भारत हेवी एलेक्ट्रिकल्स लिमिटेड की सम्पत्ति है इसका प्रत्यक्ष एवं अप्रत्यक्ष रूप से किसी भी तरह प्रयोग जो कि कम्पनी के हित में हानिकारक हो न किया जाय।

BASED ON OWN EXPERIENCE

GENERAL AND SEAWORTHY PACKING INSTRUCTIONS FOR TURBINE INSTRUMENTATION EQUIPMENT & ACCESSORIES

1.0 SCOPE:

This instruction covers the packing instruction for the safe dispatch and delivery of turbine instrumentation equipment like Electronic modules/ components, Indicator, Recorders, Transmitter, gauges, switches and other allied items, control cabinets & desks, Fitting, mounting accessories, impulse pipe lines and other related equipment and accessories.

2.0 INTRODUCTION:

The Turbine instrumentation equipment, components, cabinets and other accessories are of precision storage and special packaging is necessary to ensure safe transit and delivery of these items at the sites. Packaging should be done to protect these sophisticated and precision items against damage by means of shocks and vibration during handling and transportation, moisture, dust and other adverse climatic and environmental conditions. This specification is arranged in section as below:

- **SECTION A:** General packaging instructions common for all categories of items.
- **SECTION B:** Electronic modules, instruments & allied items.
- **SECTION C:** Starter panels.
- **SECTION D:** Fitting, mounting accessories and
- **SECTION E:** Impulse pipes.

				नाम NAME	दिनांक एवं हस्ताक्षर SIGNATURE & DATE
STE	D.K. RAY		अनुवादक TRANSLATED BY		
QAX	S.Chandra	27/3/18	निर्माणकर्ता WORKED BY	BRIJ LAL RAM	23/03/18
TSX	LALIT KUMAR	Lalit Kumar 27/3/18	जाचकर्ता CHECKED BY	LAXMI KANT MISHRA	23/03/18
महमत विभाग AGREED DEPTT.	नाम NAME	दिनांक एवं हस्ताक्षर DATE & SIGNATURE	पर्यवेक्षणकर्ता SUPERVISED BY	VINOD KUMAR	23/3/18

REAFFIRM YEAR-2025

स्वीकृति APPROVED : B.S.RANA 23/3/18

Gr. NO. ST6.18

REV.NO.	02		निर्माण PREPARED : C.I.E	जारी ISSUED : TSX	दिनांक DATE : 16.03.81
Dt.	24/02/2025				
CHANGE ADVICE NO.	TSX(CIE)-25-47				

सामग्री सूची संख्या INVENTORY NO. P-5289

दिनांक एवं हस्ताक्षर SIGN & DATE 27/3/18

3.0 PACKAGING INSTRUCTIONS :

3.1 (A) GENERAL :

(i) The packaging should be done in a clean, dust free packing area/room.

(ii) Wherever possible, the original packing materials like thermocol box/ chips, packing paper, board, cotton waste, rubberized coir, wood wool etc. should be used for packaging of these equipments etc.

(iii) All the items should be thoroughly checked for any possible mechanical damage/ distortion/ dents and rust/ corrosion etc. Appropriate rectification measures should be taken to remove such defects and if required engineering division should be consulted.

(iv) While packaging, all the items should be temporarily stored on raised wooden platform covered with clean parchment paper.

(v) The repacking of all the bought out items must be done in the original way as they were received from the manufacturers/ suppliers. It must be ensured that the polythene bags are properly sealed, air tight and sufficient cushioning with rubberized coir or wood wool has been provided to various items and containers/ boxes.

(vi) The packing box should be made water proof by putting a continuous barrier of water- proof bitumen paper/craft paper over the internal surfaces of the box to make it sufficiently impervious to water, and small silica gel bags suitably placed inside the packages. This can be done by using tar felt on the top of all the boxes. It should project by 50mm on all the sides and projected part should be nailed and overlap of the tar felt should be avoided.

(vii) The packaging should be done in such a way that the individual instruments/ containers/ boxes do not have relative movement inside the packing box during handling and transportation. Sufficient stiffness should be provided on the packing boxes to withstand mechanical shocks/ vibrations and other transit hazards.

(viii) Wherever necessary, threaded/ machined portion should be coated with grease and wrapped with wax paper and tied with thread. Alternatively, threaded part may be wrapped with corrugated paper.

COPYRIGHT AND CONFIDENTIAL
The information on this documents is the property of Bharat Heavy Electrical Limited.It must not be used directly or indirectly in any way detrimental to the interest of the company
स्वत्वाधिकार एवं गोपनीय
इस प्रलेख में दी गई सूचना भारत हेवी एलेक्ट्रिकल्स लिमिटेड की सम्पत्ति है इसका प्रयोग गत अप्रत्यक्ष रूप से किसी भी तरह प्रयोग जो कि कम्पनी के हित में हानिकारक हो न किया जाए

3.2 (B) ELECTRONIC MODULES INSTRUMENTS AND ALLIED ITEMS:

(i) All the Electronic modules/instruments and accessories should bear respective tag numbers as indicated in the shipping list.

(ii) Individual instruments like indicators, recorders, transmitters, gauges, switches, detectors and electronic modules/ components should be sealed air tight in polythene bags which should contain silica gel in small bags of cotton cloth. Also volatile corrosion inhibitor (VCI) powder on table can be put in the bags/boxes containing the instruments.

(iii) After sealing in polythene bags these items should be packed in small sized boxes, preferably original ones, with sufficient thermocol chip/ molded thermocol box/ card board box as the case may be. These boxes should be packed with sticking cello tapes and cotton tapes.

(iv) The outside of these smaller boxes should carry dispatch unit number, packing box number and the tag number of the instrument/ equipment as shown in the shipping list.

(v) Number of such small sized boxes should be kept in bigger sized box/carbon and these boxes/cartons should be in turn securely placed in the packing box in such a way that no damaged occurs because of handling, shifting, lifting or transportation.

(vi) Thermocouple and Resistance thermometer shall be packed in suitable sized wooden box with appropriate & sufficient cushioning materials.

3.3 (C) CABINETS & STARTER PANELS :

(i) The cabinet or starter panels should be clamped securely and firmly to the base plate of packing box with suitable nuts & bolts.

(ii) The cabinets or starter panels shall be sealed airtight with polythene bags and a cotton bag containing silica gel shall be place inside the cabinets. As the cabinets/ starter panels etc. contain small mechanical contacts so VCI paper can be wrapped all around and fixed with tape.

(iii) Sufficient stiffness/braces with padded cushions should be provided to ensure rigid packing.

COPYRIGHT AND CONFIDENTIAL
The information on this documents is the property of Bharat Heavy Electrical Limited It must not be used directly or indirectly in any way detrimental to the interest of the company
स्वत्वाधिकार एवं गोपनीय
इस प्रलेख में दी गई सूचना भारत हेवी एलेक्ट्रिकल्स लिमिटेड की सम्पत्ति है उसका प्रत्यक्ष एवं अप्रत्यक्ष रूप से किसी अन्य तरह प्रयोग जो कि कम्पनी के हित में हानिकारक हो न किया जाय।
SUPERSEDES INVENTORY
सामग्री सूची संख्या को अधिक्रमित करता है
दिनांक एवं हस्ताक्षर SIGN & DATE
27/3/18
सामग्री सूची संख्या INVENTORY NO. P-5284

दिनांक एवं हस्ताक्षर SIGN & DATE
SUPERSEDES INVENTORY
सामग्री सूची संख्या को अधिक्रमित करता है
COPYRIGHT AND CONFIDENTIAL
The information on this documents is the property of Bharat Heavy Electrical Limited.It must not be used directly or indirectly in any way detrimental to the interest of the company
स्वत्वाधिकार एवं गोपनीय
इस प्रलेख में दी गई सूचना भारत हेवी इलेक्ट्रिकल्स लिमिटेड की सम्पत्ति है इसका प्रत्यक्ष एवं अप्रत्यक्ष रूप से किसी भी तरह प्रयोग जो कि कम्पनी के हित में हानिकारक हो न किया जाय।

3.4 (D) FITTINGS & MOUNTING ACCESSORIES ETC. :

(i) This category includes items like instrument valves, nipples, brackets, fasteners etc.

(ii) Apply appropriate coating of grease on the threaded and machine portion and wrap the individual item with wax paper and tie with thread.

3.5 (E) IMPULSE PIPE LINES :

(i) Impulse pipe lines are to be closed at both the ends by rubber plugs/ Neoprene grommets to prevent the clogging of pipelines by foreign materials/ dust, wood powder etc.

(ii) While packing these pipelines care should be taken that no heavy material is put on top of them. This is necessary to ensure protection against mechanical damage.

(iii) All the impulse pipe lines in a packing box should be tried with steel wires in small groups of 10-15 pipe lines

(iv) Due care should be taken so that loose item such as above do not collide with each other causing damage to thread /machined port.

4.0 SEA-WORTHY PACKING INSTRUCTIONS FOR EXPORT PROJECTS AND SEA COASTAL PROJECTS:

4.1 GENERAL

The standard covers guide lines for making Sea- worthy standard packing boxes to be used for transportation for export orders. Vendors shall be responsible for packing and shall meet the minimum requirements specified herein.

4.2 SCOPE IN ADDITION TO CLAUSE NO. 1.0 AS ABOVE

The procedure specifies minimum guidelines to be complied with for packing of electrical and electronic Components /Assemblies/Equipments. This specification shall be suitable for different handling operations and the adverse conditions during transportation and during indoor/outdoor storage for period of minimum two years.

4.3 WOOD SPECIFICATION FOR PACKING

The wood used for packing shall conform to specification ISPM NO. 15. (International Standards for Phytosanitary Measures).

4.4 REQUIREMEMTS FOR PACKING CASE:

4.4.1 All equipment and materials shall be suitably coated wrapped, or covered and boxed or crated for export shipment so as to prevent damage during handling and storage at the Site. Cardboard containers (if any) shall be enclosed in a solid wooden container to avoid damage during transit.

4.4.2 Equipment and process materials shall be packed and semi knocked down, to the extent possible, to facilitate handling and storage and to protect bearings and other machine surfaces from oxidation. Each container box, crate or bundle shall be reinforced with steel strapping, in such a manner that breaking of one strap will not cause complete failure of the packaging. The packing shall be of best standard to withstand rough handling and to provide suitable protection from tropical weather while in transit and while awaiting erection at the site.

4.4.3 Waterproof paper and felt linings shall overlap at seams at least 15mm and the seams shall be secured together.

4.4.4 Equipment and materials in wooden cases or crates shall be properly cushioned to withstand the abuse of handling, transportation and storage. Packing shall include preservatives suitable for tropical conditions. All machine surfaces and bearings shall be coated with oxidation preventative compounds. All parts subject to damage when in contact with water shall be coated with suitable grease and wrapped in heavy asphalt or tar impregnated paper.

4.4.5 Fumigation of boxes including plywood/spacers shall be carried out as per ISPM 15 to make it pest free. All wood packing in each consignment shall be free from bark and all visible signs and fungal attack at the time of shipment.

4.4.6 Components sub-assemblies and assemblies sensitive to climatic conditions shall be packed seal tight. All the openings of the sensitive components, sub-assemblies and assemblies shall be blanketed to prevent the ingress of dust and moisture. The components sub-assemblies and assemblies shall be completely covered with 2 layers of polyethylene sheet. Polyethylene sheet to be used shall be UV stabilized. All sharp corners and edges are to be protected by rubber mats to prevent damage the polyethylene sheet. Top surface of the case shall be free from dents to prevent rain water pockets.

दिनांक एवं हस्ताक्षर SIGN & DATE

SUPERSEDES INVENTORY NO.

सामग्री सूची संख्या को अधिक्रमित करता है

COPYRIGHT AND CONFIDENTIAL
The information on this documents is the property of Bharat Heavy Electrical Limited.It must not be used directly or indirectly in any way detrimental to the interest of the company

स्वत्वाधिकार एवं गोपनीय
इस प्रलेख में दी गई सूचना भारत हेवी इलेक्ट्रिकल्स लिमिटेड की सम्पत्ति है उसका प्रयोग सब अप्रत्यक्ष रूप से किसी ऐसे तरह प्रयोग करें कि, कम्पनी के हित में हानिकारक हो न किया जाय।

दिनांक एवं हस्ताक्षर SIGN & DATE 27/3/18

4.4.7 The four sides shall be lined, from inside with multi-layered polyethylene sheet of at least 120 GSM and tacked at suitable places.

Whenever specified in addition to the polyethylene sheet the top cover will have a layer of bitumen felt over the cover. This should project about 100 - 250 mm on all sides shall be provided between frame and planks of the end and side shook as shown in Fig. (For reference only.)

END SHOOK

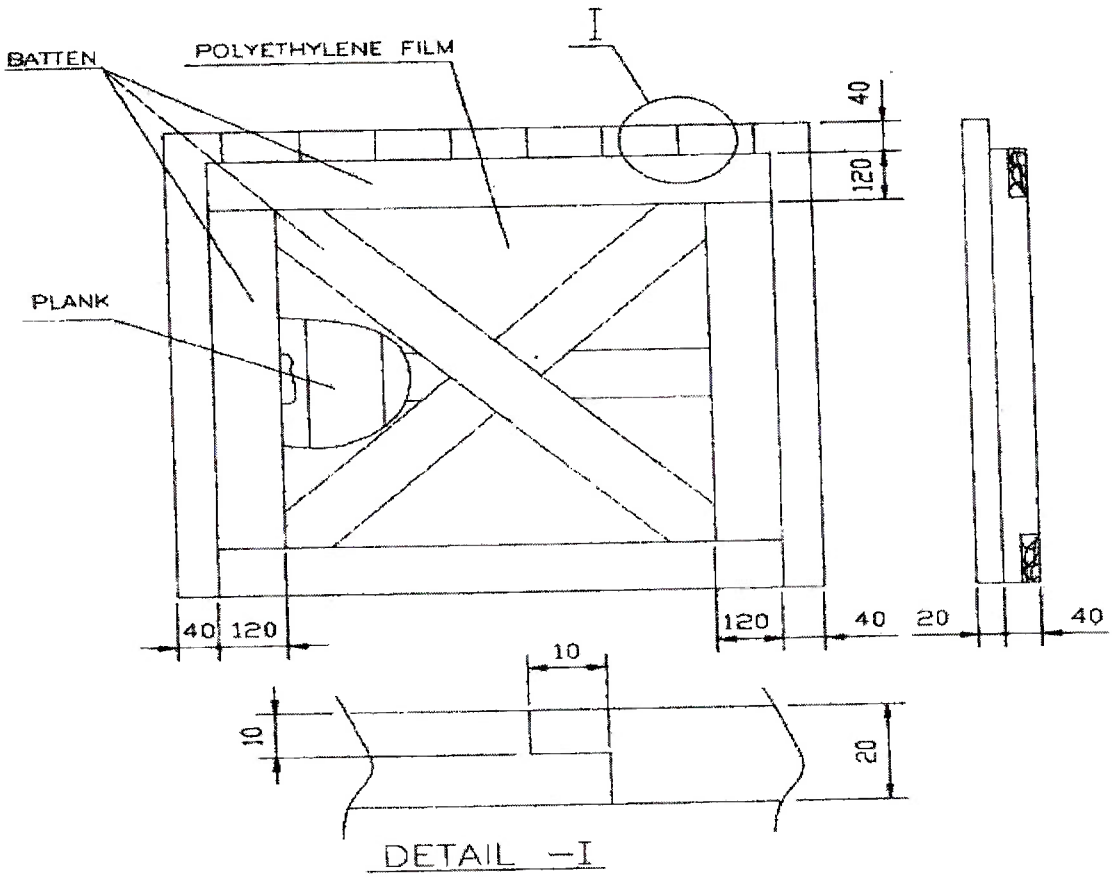

COPYRIGHT AND CONFIDENTIAL
The information on this documents is the property of Bharat Heavy Electrical Limited It must not be used directly or indirectly in any way detrimental to the interest of the company

स्वत्वाधिकार एवं गोपनीय
इस प्रलेख में दी गई सूचना भारत हैवी एलेक्ट्रिकल्स लिमिटेड की सम्पत्ति है इसका प्रत्यक्ष या अप्रत्यक्ष रूप से किसी भी तरह प्रयोग जो कि कम्पनी के हित में हानिकारक हो न किया जाय।

COPYRIGHT AND CONFIDENTIAL
The information on this documents is the property of Bharat Heavy Electrical Limited It must not be used directly or indirectly in any way detrimental to the interest of the company

स्वत्वाधिकार एवं गोपनीय
इस प्रलेख में दी गई सूचना भारत हेवी इलेक्ट्रिकल्स लिमिटेड की सम्पत्ति है उसका प्रत्यक्ष एवं अप्रत्यक्ष रूप से किसी भी तरह प्रयोग जो कि कम्पनी के हित में हानिकारक हो न किया जाए,

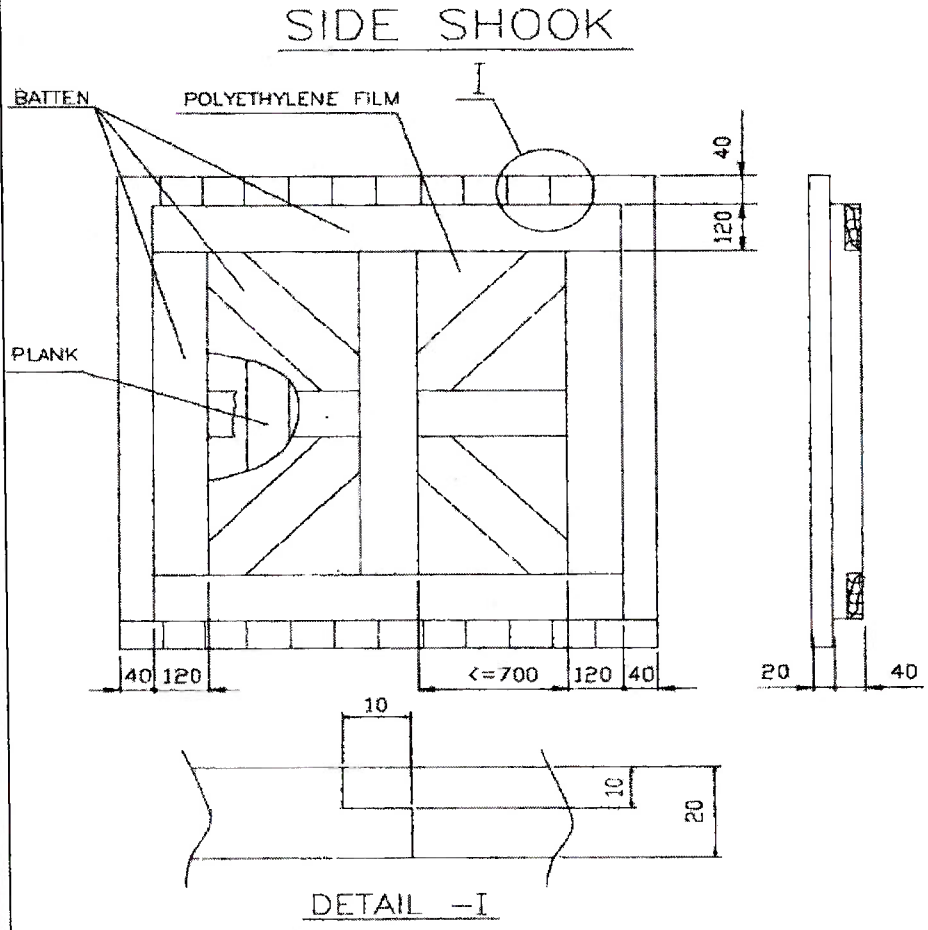

* DIEMENSIONS SHOWN IN ABOVE FIGGURE ARE INDICATIVE ONLY.

It is preferable to have a single piece of the above multi-layered polyethylene sheet fixed on the four sides. In case jointing is unavoidable, it should be done by overlapping of approximately 100 mm.

Place the Components/cartons with corrosion inhibitors duly applied wherever necessary for place suitably, thin muslin cloths bags containing minimum 100 grams (approx.) of activated Blue Silica Gel as per **IS 3401-1992/ BS 3482-1991** with standard particle size of 3 to 6 mesh (5.6 to 2.8mm), wherever necessary. Alternatively, VCI Powder as per **IS 6263-1972/ IEC 68-2-30:1980** or Tablet may be used. Approximately 7 m3 VCI paper is necessary for 1 m3 of packed item. VCI Paper shall not be used for components made of aluminum, aluminum alloys, Zinc, Copper, Brass, cadmium & silver. VCI powder is sprinkled inside the piping components ends and shall be protected with end cover.

दिनांक एवं हस्ताक्षर SIGN & DATE
SUPERSEDES INVENTORY NO.
मागणी सूची संख्या को अधिक्रमित करता है
COPYRIGHT AND CONFIDENTIAL
The information on this documents is the property of Bharat Heavy Electrical Limited It must not be used directly or indirectly in any way detrimental to the interest of the company
स्वत्वाधिकार एवं गोपनीय
इस प्रलेख में दी गई सूचना भारत हैवी एलेक्ट्रिकल्स लिमिटेड की सम्पत्ति है इसका प्रयोग एवं अप्रत्यक्ष रूप से किसी भी तरह प्रयोग जो कि कम्पनी के हित में हानिकारक हो न किया जाय।

All packages shall be covered on all sides with suitable GI sheets.

4.4.8 Cover the whole equipment with polyethylene sheet of at least 120 GSM, on all sides preferably by a single piece.

4.4.9 Silica gel is used for this purpose to protect the contents over sufficiently long time from corrosion. At the time of use, silica gel should be so dried that its color becomes dark blue. These shall be filled in small cotton bags. Before sealing the equipment, the silica gel bags should be kept inside the polyethylene film cover at different locations. The quantity of silica gel should not be less than 2.0 Kg per m3 volume of the packing box.

4.4.10 Each case shall contain a packing list showing the detailed contents of the package. When any technical documents are supplied along with the shipment of materials no single package shall contain more than one set of such documents. Shipping papers shall clearly indicate in which packages the technical documents are contained.

4.4.11 The case number shall be written in the form of a fraction, the numerator of which is the serial number of the case and the denominator the total number of case in which a complete unit of equipment is packed.

4.4.12 Wherever necessary besides usual Inscriptions the cases shall bear special indication such as "Top", "Do not turn over", "Care', "Keep dry", etc., as well as indication of the center of gravity (with red vertical lines) and places for attaching slings (with chain marks). For all fragile equipment, unit should take special care to pack and label with additional markings such as **" FRAGILE, HANDLE WITH CARE", "LIFTING POINTS", "THIS WAY UP", " DO NOT STACK"** etc. to protect them from damage in transit.

4.4.13 Completeness of Contents of each packing case:

Concerned CQA/Unit QC/Third Party Inspection Agency shall verify the completeness of contents of each package w.r.t. packing list both in terms of quality and quantity before authorizing dispatch of the consignment.

Packing commensurate with international standards and accepted norms will be ensured by CQA/ Unit QC/Third Party Inspection Agency. Packing has to be sea-worthy and secure. As far as possible, the packing has to be rectangular in shape for optimum space utilization in the ship and economize on shipping costs. Projections on packages are prohibited.

4.4.14 Completeness of Contents of each packing case:

The packing list has to be checked and certified by the Inspection agency with due signatures. All packages shall be enclosed in suitable GI sheets on all sides. The top of box should be covered by GI sheet in single length & width.

No loose items Gunny bag packing is allowed for shipment.

4.4.15 Provision of Inspection Windows on Packages:

Vendors should provide inspection window of size 6" x 4" (glass perplex) for customs examination for all packages (above 1.5 x 1.5 x 1.5 cum) involving panels of any kind. Care would be taken to ensure that all packages are properly sealed to avoid ingress of moisture, rodents etc. Packing slip folders shall be attached outside with each box.

4.4.16 Provision of Humidity Indicator:

i. Humidity indicator must be provided in each packing boxes. Humidity indicator shall be placed behind inspection window or as far as practicable from the nearest unit of desiccant.

ii. Use a three-spot paper card type 1x4 inches in size to show humidity with instruction as indicated in figure below. The spots indicate relative humidity of 50 percent, 40 percent and 30 percent, top to bottom, by changing color from blue to pink.

HUMIDITY INDICATOR

EXAMINE ITEM IF PINK (50)

CHANGE DESSICANT IF PINK (40)

WARNING IF PINK (30)

4.4.17 Marking for Safe Handling:

To ensure safe handling, packing case shall be marked to show the following:

i. I Upright position.
ii. Sling position and Centre of Gravity position.
iii. Storage category.
Fragile components (to be marked properly with a clear warning for safe handling).

COPYRIGHT AND CONFIDENTIAL
The information on this documents is the property of Bharat Heavy Electrical Limited It must not be used directly or indirectly in any way detrimental to the interest of the company
स्वत्वाधिकार एवं गोपनीय
इस प्रलेख में दी गई सूचना भारत हेवी इलेक्ट्रिकल्स लिमिटेड की सम्पत्ति है इसका प्रत्यक्ष एवं अप्रत्यक्ष रूप से किसी ऐसे तरह प्रयोग जो कि कम्पनी के हित में हानिकारक हो न किया जाय।

4.4.18 Shipping Documentation including those covered by customs requirements:

i. Packing List (O&M manual to be listed in packing list, if sent along with consignment).

ii. Fumigation certificate for wooden boxes

4.4.19 <u>THE FOLLOWONG DETAILS ARE TO BE MARKED ON THE PACKING CASES:</u>

a) Address of consignee.
b) Purchase Order No.
c) Description of item or title of packing list.
d) Case identification Number.
e) Net Weight.
f) Gross Weight.
g) Dimensions of box
h) Marking showing upright position.
i) Marking showing umbrella (i.e. for machines/ components to be stored under covered storage.

MARKING ON PACKING BOXES

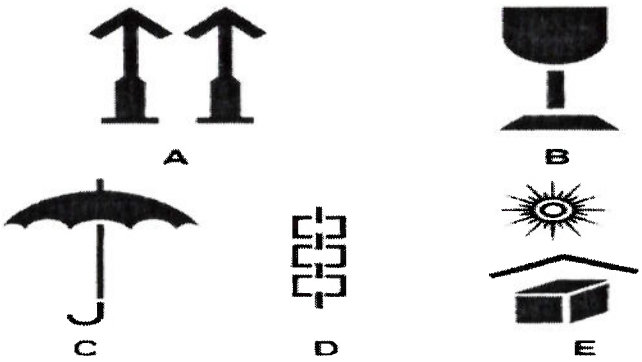

A UPRIGHT
B FRAGILE
C PROTECTION FROM FALLING OR CONDENSING MOISTURE
D SLING POSITION
E PROTECTION FROM DIRECT RADIATION

5.0 <u>CROSS REFERED STANDARD:</u>

IS 3401-1992, BS 3482-1991, IS 6263-1972 & IEC 68-2-30:1980.

COPYRIGHT AND CONFIDENTIAL
The information on this documents is the property of Bharat Heavy Electrical Limited.It must not be used directly or indirectly in any way detrimental to the interest of the company

REV. NO. 02		निर्माणकर्ता WORKED BY	BRIJ LAL RAM	Brijlal	23/03/18
		जांचकर्ता CHECKED BY	LAXMIKANT MISHRA		23/03/18

सामग्री सूची संख्या INVENTORY NO. PJ7284

दिनांक एवं हस्ताक्षर SIGN & DATE 27/3/18

Documents Check List/ Index

Note: Please submit your offer mentioning documents details in below table or mention Annex details. If any bidder is not responding after 2 reminders /7 days or not providing complete documents as per BHEL query, their offer will be evaluated on the basis of available documents.

Sl. No.	Details	Remarks	Documents
1.	Technical Bid Against Bid No.	**GEM/2025/B/6194052 dt 03.05.2025**	
2.	Vendor Name:		
3.	Works Address		
4.	Item Details	**Pressure Transmitters & HHC**	
5.	Project:	**Talcher & LARA**	
6.	Qty:	**134+134=268**	
7.	Quoted Model detail (if any):		
8.	Applicable Spec:	To be submitted endorsed copy	
9.	Applicable Drawing:	To be submitted endorsed copy	
10.	Applicable QP	To be submitted endorsed copy	
11.	Quality Terms Accepted in ATC	To be accepted in ATC without any deviation	
12.	Technical Deviation (if any):		
13.	Quality Deviation (if any)		
14.	Commercial Deviation (if any)		
15.	Freight-Prepaid / Packing-inclusive / GST: inclusive	**As per GeM Enquiry/NIT**	
16.	Warrantee (as per NIT):	To be accepted in ATC without any deviation	
17.	PQR (filled)	Vendor to read PQR carefully and participate after insurance of their qualification.	
18.	Supporting Documents to PQR (details)	PO copy, approved datasheets and dispatch documents to be submitted in sequence.	
19.	Catalogue for HHC	Please provide	
20.	BOM	Including Range, Accuracy, Process and Electrical connection	
21.	**Additional Terms & Conditions**	Properly filled and signed all details & terms	
22.	MII declaration	Format available in ATC	
23.	MSE certificate (if any)	Mention in GeM also.	
24.	Customer approval	Non- NTPC approved vendor shall be submitted their credential during technical scrutiny.	

Vendor Sign & Stamp