DISCONNECTING SWITCH

Schedule Number	Description	Unit	QTY/Unit	Quoted/Not Quoted
Schedule No.:1	DISCONNECTING SWITCH VAR 05-70KV	NO	62	
Schedule No.:2	DISCONNECTING SWITCH 95KV VAR 01	NO	110	

Note: Supplier should submit all attached ***Signed & Sealed*** enquiry documents given along with enquiry including ***Signed and Sealed*** SDDR (Specification deviation disposition report)

In case of non-submission of all requested documents along with offer, your offer will be liable for rejection in GeM Portal.Two days time will be given for representation within which supplier should submit all documents.On non-submission of representation within 2 days, your offer will be liable rejection.

Aslo Supplier should furnish there Project Coordinator contact details i.e Email ID's and Contact Number for Techno Commercial Queries.

DOCUMENT TITLE : TECHNICAL SPECIFICATION FOR BOUGHT OUT ITEMS

ITEM : DISCONNECTING SWITCH

PROJECT : BHEL STANDARD

	NAME	DESIGNATION	SIGNATURE	DATE
PREPARED BY	ALAN S G	ET		
REVIEWED BY	NAZEER AHAMED T M	DGM		
APPROVED BY	JEYAMURUGANAND M	AGM		

ISSUED BY EDC – ECI

RECORD OF REVISIONS:

1	**SCOPE OF SUPPLY**	Manufacture, Inspection, testing, packing and delivery.

2	**APPLICATION**	Used in ELECTROSTATIC PRECIPITATOR to disconnect the field from high voltage in OFF condition and to earth the field. The high voltage encountered in the system is in the order of 70 KV / 95 KV, DC (peak) unfiltered voltage

3 APPLICABLE STANDARDS

3.1	IS/IEC 60947	Low-voltage switchgear and control gear
3.2	IS 2071 Part1	High-voltage Test Techniques Part 1 General Definitions and Test Requirements
3.3	IS/IEC 60168 : 2000	Tests on Indoor and Outdoor Post Insulators of Ceramic Material or Glass for Systems with Nominal Voltages Greater than 1 000 V
3.4	IS/IEC 60529 : 2001	Degrees of protection provided by enclosures (IP code)
3.5	IS 5350	Dimensions of indoor & outdoor porcelain post insulators & post insulator units for systems with Nominal voltages greater than 1000V.

4 SITE CONDITIONS

4.1	Ambient temperature	5 Deg.C to 50 Deg.C
4.2	Design ambient temperature	50 Deg.C
4.3	Relative humidity	100%
4.4	Environment condition	Highly polluted, abrasive & dusty atmosphere
4.5	Location	Outdoor

5 GENERAL REQUIREMENTS

5.1	Contruction	Welded with smooth surface and edges. Burrs,if any, shall be removed All parts should be Corrosion resisitant Current carrying parts shall be made of Tinned Copper Connecting ends shall be made of Nickel Chromium plated brass Dimensions As per Enquiry Drawing
5.2	Enclosure	IP 55 Degree of protection
5.3	Type Tests:	
5.3.a	Impulse withstand voltage	70KV system- capable of withstanding 170 KV (peak) (negative), 1.2/50 microsecond 95 KV system- capable of withstanding 250 KV (peak) (negative), 1.2/50 microsecond
5.3.b	Power frequency dry withstand voltage	70 KV system - minimum 75 KV (rms) for 1 minute 95 KV system - minimum 95 KV (rms) for 1 minute
5.4	Design of knife contact	After repeated ON/ OFF operations for 500 times, the knife contact gap shall not show an increased gap of more than 0.4 mm.
5.5	Insulator make	BHEL/JAYSHREE/W.S.INDUSTRIES/UCE
5.6	Load withstand of bonding of metal parts	Torsion load - atleast 15 Kg-m Tensile load - 4500 N (459 Kg).
5.7	Painting colour	As per P.O

6 INSPECTION AND TESTING

Shall be inspected and tested as per the given documents	BHEL Purchase order
	BHEL / NTPC approved vendor drawings
	BHEL Technical specification (TEP)
	Inspection checklist

7	PACKING	As per BHEL Drg no. 3-00-114-41059/REV00
		Suitable labelling for belt/fork lifting shall be provided on packing

8	**NAME PLATE**	Made of non-corrosive material indicating manufacturers name, Serial number, type (variant number), etc

9	**DOCUMENTATION**	The supplier shall submit six sets of all detailed drawings & in soft copy prepared in autocad-14 specifically for this project, for approval within 15 days from the date of purchase order. After final approval the supplier shall also submit the approved drawings in CD apart from 6 hard copies.

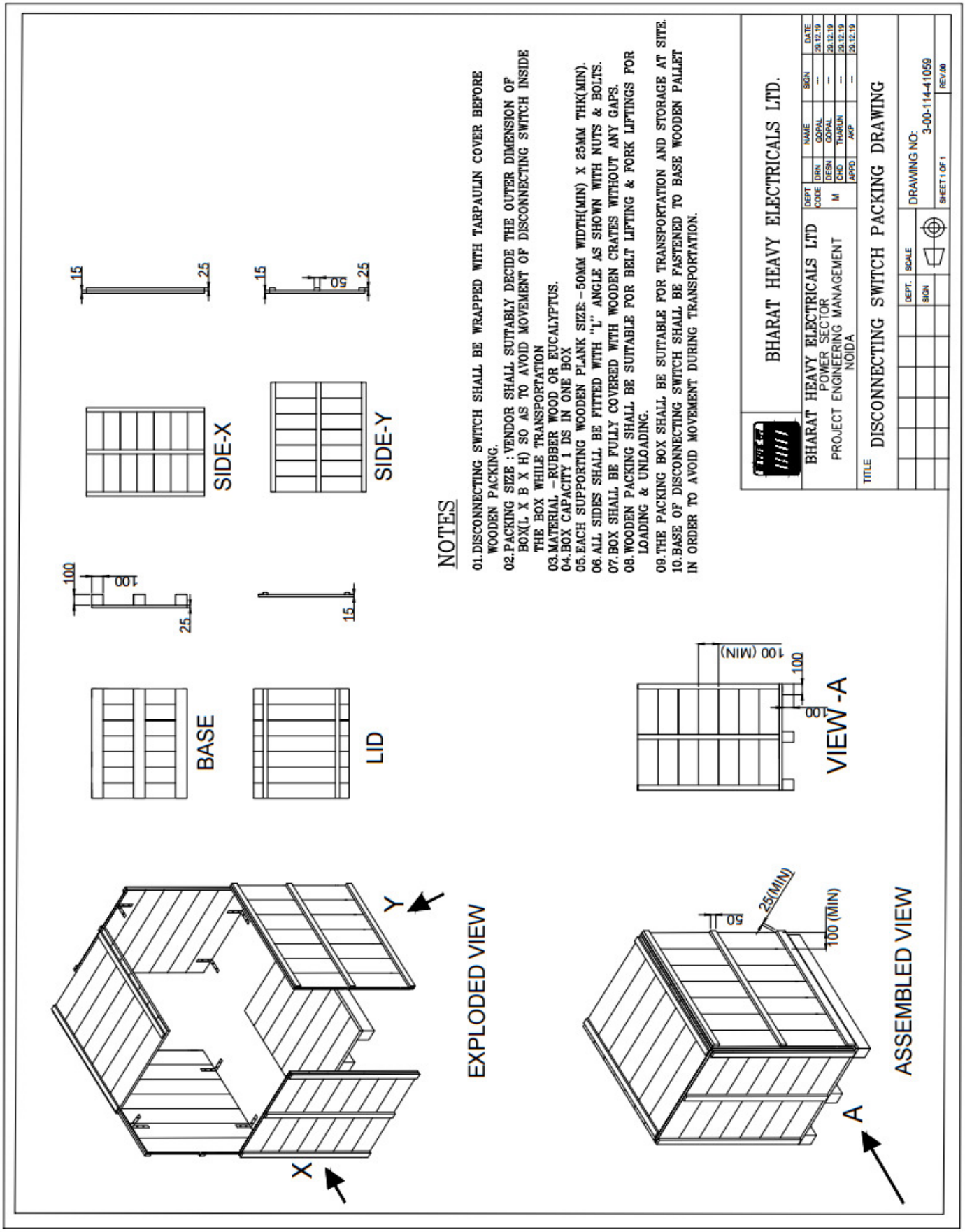
SIDE-X
SIDE-Y
BASE
LID
VIEW -A
EXPLODED VIEW
ASSEMBLED VIEW
100 (MIN)
25(MIN)
NOTES
01. DISCONNECTING SWTCH SHALL BE WRAPPED WITH TARPAULIN COVER BEFORE WOODEN PACKING.
02. PACKING SIZE : VENDOR SHALL SUTABLY DECIDE THE OUTER DIMENSION OF BOX(L X B X H) SO AS TO AVOID MOVEMENT OF DISCONNECTING SWTCH INSIDE THE BOX WHILE TRANSPORTATION
03. MATERIAL –RUBBER WOOD OR EUCALYPTUS.
04. BOX CAPACITY 1 DS IN ONE BOX
05. EACH SUPPORTING WOODEN PLANK SIZE:-50MM WIDTH(MIN) X 25MM THK(MIN).
06. ALL SIDES SHALL BE FITTED WITH "L" ANGLE AS SHOWN WITH NUTS & BOLTS.
07. BOX SHALL BE FULLY COVERED WITH WOODEN CRATES WITHOUT ANY GAPS.
08. WOODEN PACKING SHALL BE SUITABLE FOR BELT LIFTING & FORK LIFTINGS FOR LOADING & UNLOADING.
09. THE PACKING BOX SHALL BE SUITABLE FOR TRANSPORTATION AND STORAGE AT SITE.
10. BASE OF DISCONNECTING SWTCH SHALL BE FASTENED TO BASE WOODEN PALLET IN ORDER TO AVOID MOVEMENT DURING TRANSPORTATION.
BHARAT HEAVY ELECTRICALS LTD.
BHARAT HEAVY ELECTRICALS LTD
POWER SECTOR
PROJECT ENGINEERING MANAGEMENT
NOIDA
DEPT CODE
DRN GOPAL 29.12.19
DESN GOPAL 29.12.19
M CHD THARUN 29.12.19
APPD AKP 29.12.19
TITLE
DISCONNECTING SWITCH PACKING DRAWING
DEPT.
SCALE
SIGN
DRAWING NO:
3-00-114-41059
SHEET 1 OF 1
REV.00

Pre-Qualification Criteria

Enq. No. & Date:

Bidder's Name:

The following are the Pre-Qualification Criteria for participating in the Tender. Necessary supporting documents shall be submitted for meeting each of the below Pre-Qualification Criteria for evaluation of the offers.			
Sl. No.	**Pre- Qualification Criteria**	**Documentary Evidence to be submitted by Bidder along with offer**	**Bidders' Remarks/ Comment/ Confirmation**
01	Bidder should be original manufacturers or OEM authorized distributor /agent/trader.	Certificate of being original manufacturer. A valid OEM authorization letter in case of Distributor /Agent/ Trader.	
02	Suppliers shall indicate their experience/Performance for the tendered specifications or similar items.	At least One Set of PO copy (Priced/Un priced) and corresponding proof of supply (like Invoice or SRV or GR etc) for the enquired item or similar items to be submitted. (Or) Performance certificate from customer to be submitted.	
03	Suppliers shall not have been banned / black listed / by BHEL Ranipet or any other unit/region/sector of BHEL.	Self-declaration to be submitted	
04	Supply of Disconnecting Switch as per tender description, Specification TECI:GEN:DISW:REV:00, Drawing 1-00-114-27571/ 1-00-114-29393 and SQP:QP:E:839/00	Signed copy of Specification, Drawing(Complete Set) and SQP shall be submitted as a proof of conformity.	
05	Compliance to all provision of Technical Bid Documents.	Signed copy of "No Deviation" certificate to be submitted	
BHEL reserves the right to consider / Not-consider the offers based on the evaluation of documents submitted for the above Pre-Qualification Criteria. BHEL also reserves the right to have on-Site assessment of the facilities at supplier's works during the bid evaluation.			
In case, any of information is found to be false, even after bid acceptance, immediate termination may happen and action will be taken as per extant guideline of BHEL.			

Bidder's Sign with Seal

ALL DIMENSIONS ARE IN MILLIMETRES

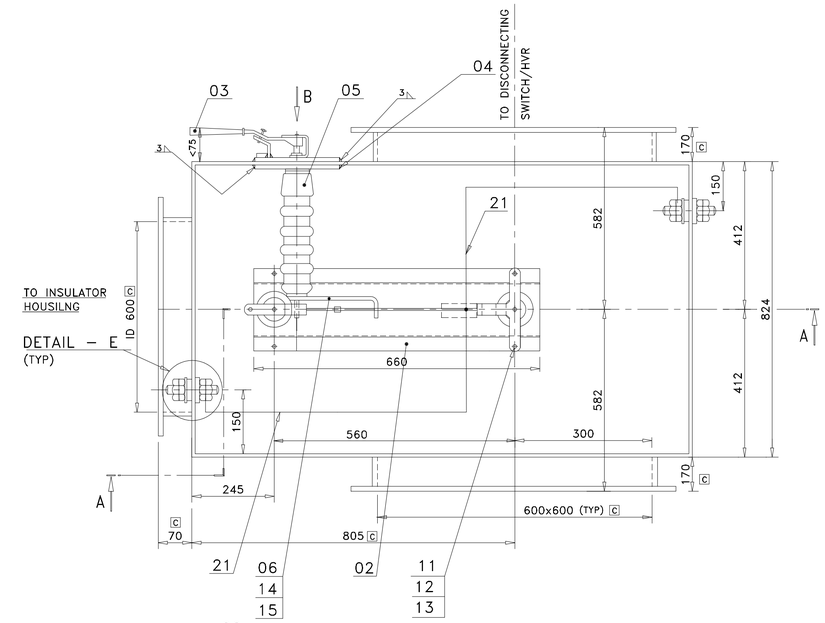

PLAN

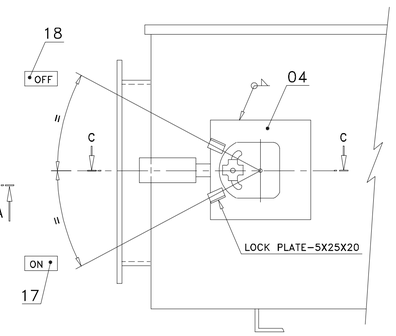

V I E W – B*

SEALING&HANDLE ARRANGEMENT IS TENTATIVE.ANY OTHER SEALING ARRANGMENT WHICH IS BETTER THAN THIS IS ALSO ACCEPTABLE, SUBJECT TO THE APROVAL BY BHEL

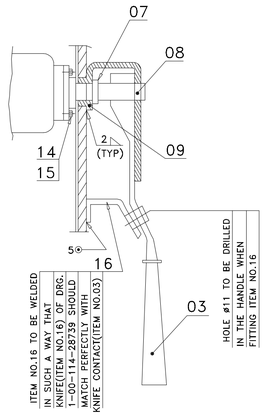

S E C – C C

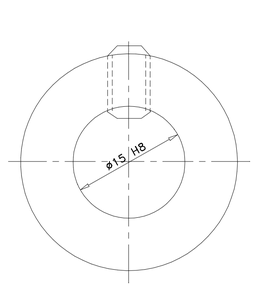

*DET.POS. 07

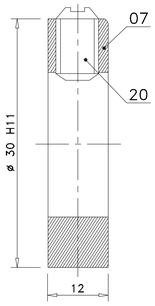

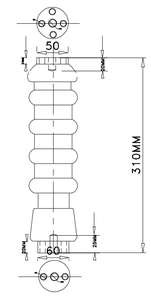

PIN INSULATOR

N O T E

01. PACKING DETAILS SHALL BE AS PER DRG NO. 3–00–114–41059
02. SWITCH ENCLOSURE SHALL BE SUITABLE FOR IP 55 DEGREE OF PROTECTION.
03. COLOUR SHADE SHALL BE AS PER ENQUIRY REQUIREMENT. DOUBLE COATING OF OUTER FINISH SHOULD BE GIVEN AFTER RED OXIDE PRIMER TREATMENT.
04. THE IMPULSE VOLTAGE LEVEL SHALL BE 250KV PEAK (–VE).
05. ALL SUB–VENDOR DRAWINGS ARE SUBJECT TO BHEL/END CUSTOMER APPROVAL.
06. SUPPLIER NAME PLATE SHALL GIVE ALL DETAILS OF : a) NAME OF THE SUPPLIER , b) SL. NO, c) VAR. NO, d)YEAR OF MANUFACTURE AND e) ADDRESS.
07. NAME PLATE SHALL BE OF ANODISED ALUMINIUM AND IT SHOULD BE FIXED SUITABLY.

–CRITICAL DIMENSIONS TO FOLLOWED FOR 95KV SYSTEM.

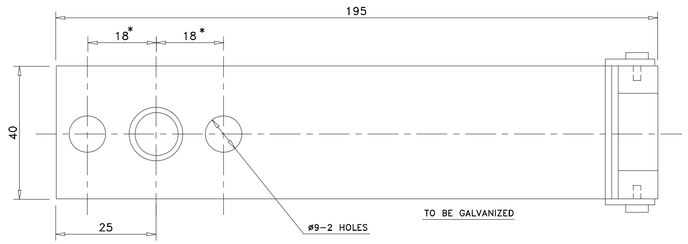

DET.POS.06 PLAN

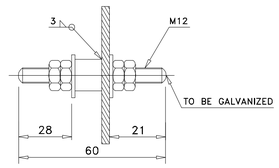

DETAIL–E

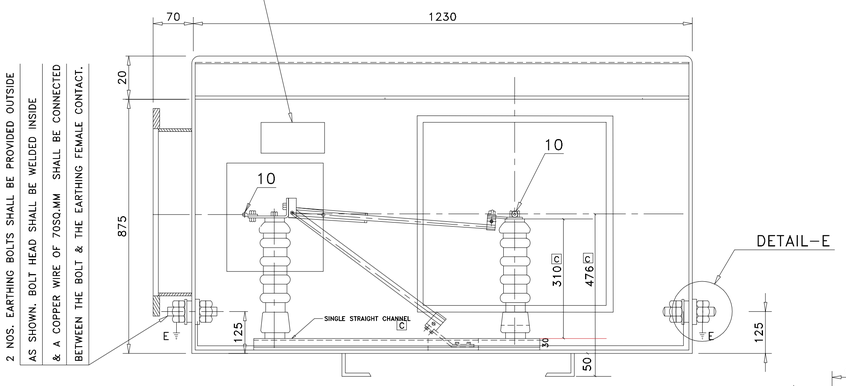

S E C – A A

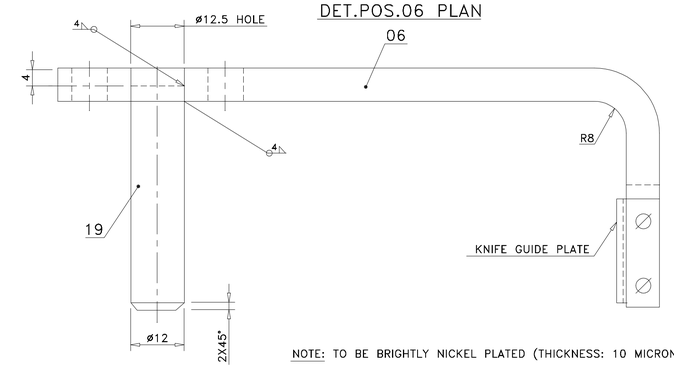

NOTE: TO BE BRIGHTLY NICKEL PLATED (THICKNESS: 10 MICRONS).

DET.POS. 06 ELEVATION

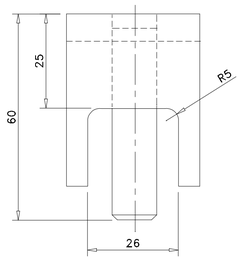

DET.POS. 06 SIDE VIEW

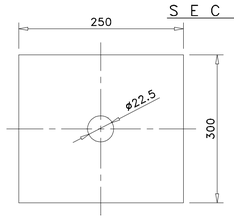

DET.POS. 04

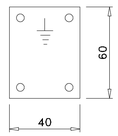

EARTH PLATE

NOTE: ENGRAVE THE SYMBOL

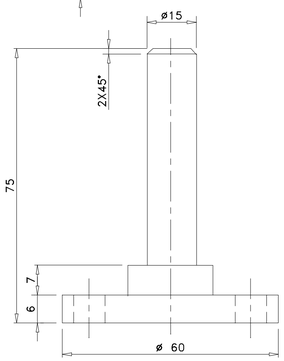

DET.POS. 08

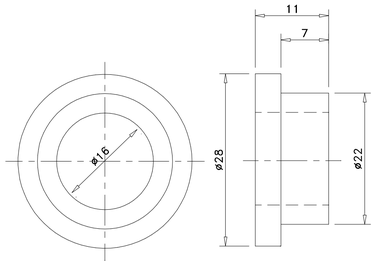

DET.POS. 09

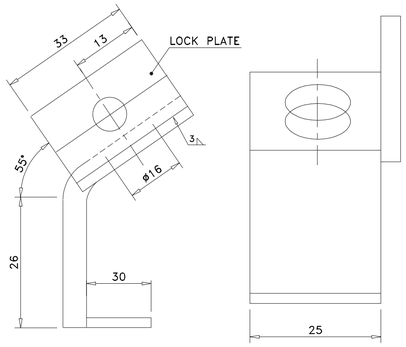

DET.POS. 16

Special Requirements:

01. This drawing shall be read alongwith drg no 10029394 &10029395
02. Type test certificate conducted at CPRI, Bangalore for 250 KV Impulse test shall be submitted. Incase already this test is done at CPRI Bangalore,the reports shall be submitted for review and approval. The test certificate shall be from CPRI Bangalore only.
03. Incase the test were done at any other lab other than CPRI,Bangalore a fresh test shall be conducted at CPRI,Bangalore.

FOR PRODUCTION
REF.–PR:QA:590 FOR PAINTING
REF.–PR:QA:500 FOR UNTOL. DIMNS.

ITEM NO.	DESCRIPTION	DRAWING NO.	MATL SPEC.	UNIT	QTY
22.	MANUFACTURER NAME PLATE				1
21.	COPPER STRIP 25x3				1
20.	GRUB SCREW M6X6		IS 2388–P–6.6		1
19.	ROUND ø 12–56		IS 2062		1
18.	ENGRAVED METAL NAME PLATE – 'OFF'				1
17.	ENGRAVED METAL NAME PLATE – 'ON'				1
16.	LOCK PL. 5X25X55		IS 2062		2
15.	WASHER M8		IS 2016		6
14.	SCREW M8X16		IS 1363–B–4.6		6
13.	WASHER M12		IS 2016		7
12.	NUT M12		IS 1363–B–4.6		4
11.	SCREW M12X22		IS 1363–B–4.6		4
10.	CONNECTING SCREW	1–79–006–00068	STYLE 02		3
09.	BUSHING ROUND ø28–11		IS 306 GR.G2 COMM. BRASS		1
08.	PIVOT ROUND ø60–75		IS 1875 CL VI		1
07.	SET RING 15 PL.12–35ø		IS 2062		4
06.	LEVER PL.8X40X231		IS 2062		1
05.	PIN INSULATOR	3–79–006–00100			3
04.	PL. 10X250X300		IS 2062		1
03.	HAND LEVER				1
02.	DISCONNECTING SWITCH				1
01.	SWITCH BOX STYLE–05	1–00–114–28738			1

REV	DATE	ALTD	CHD	APPD

STANDARD

BHARAT HEAVY ELECTRICALS LIMITED, UNIT: BOILER AUXILIARIES PLANT, RANIPET:632 406.

DEPT CODE M

	NAME	SIGN	DATE
DRN	PST	–SD–	12.05.2020
DESN	PST	–SD–	12.05.2020
CHD	AKP	–SD–	12.05.2020
APPD	M.J.M		12.05.2020

TITLE: DISCONNECTNG SWITCH ASSEBLY (95 KV SYSTEM)

BHEL/BAP DRG.NO. 1–00–114–29393

SCALE : N.T.S

–

SHEET 01 OF 03

00

ALL DIMENSIONS ARE IN MILLIMETRES

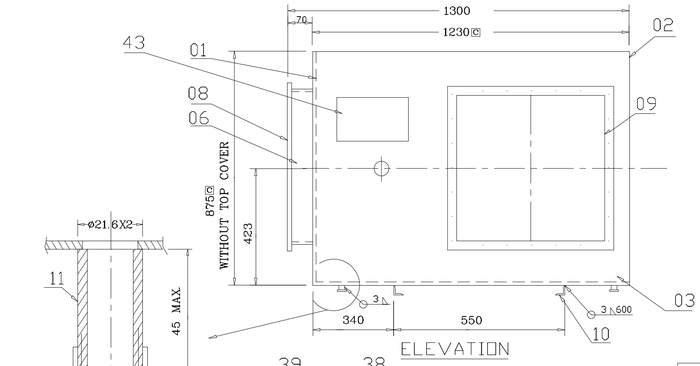

ELEVATION

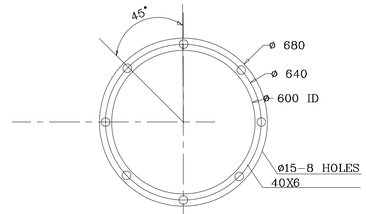

DET.POS.08 C

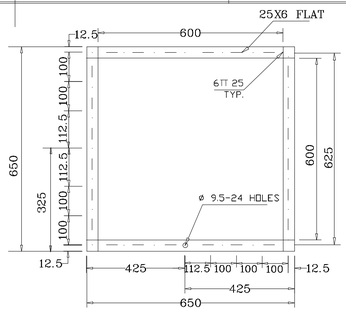

DET.POS.09 C

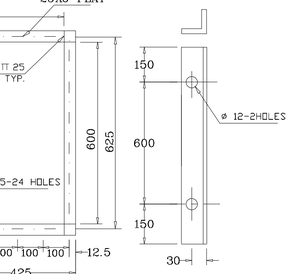

DET.POS.10

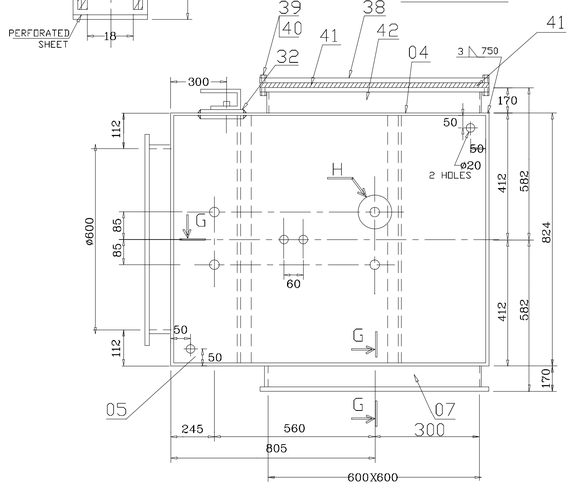

PLAN WITHOUT COVER

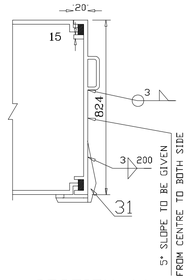

SECTION-AA

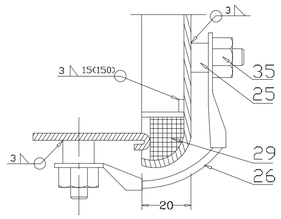

SECTION-EE

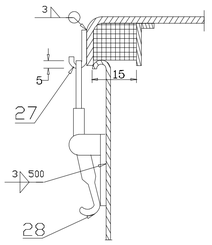

SECTION-KK

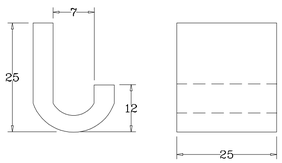

DET.POS. 27

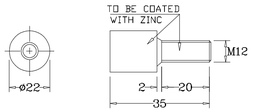

DET.POS. 25

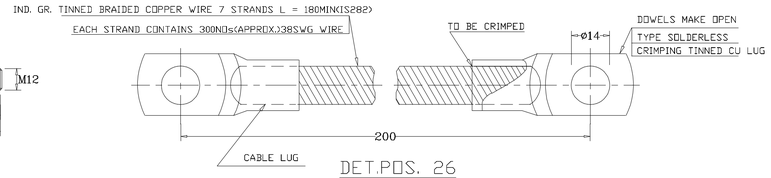

DET.POS. 26

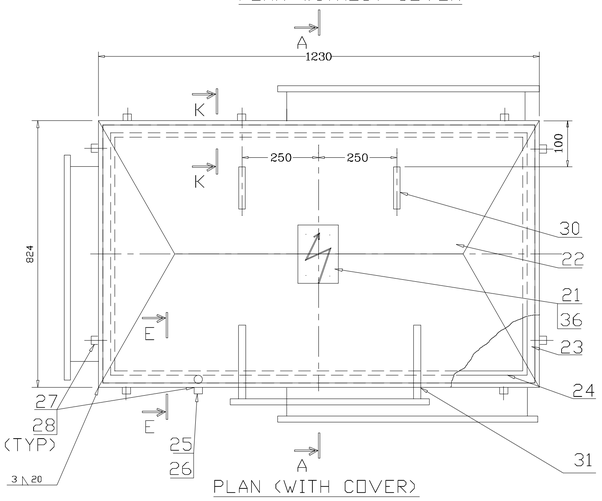

PLAN (WITH COVER)

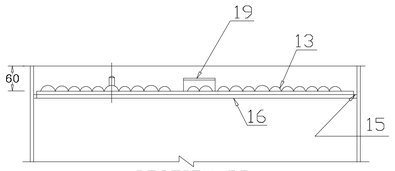

SECTION BB

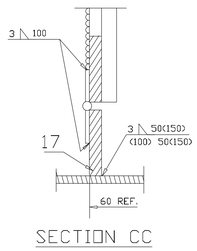

SECTION CC

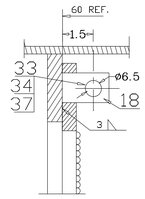

SECTION DD

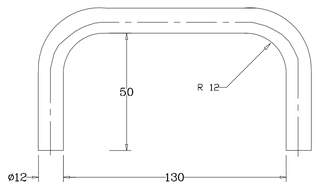

DET.POS. 30

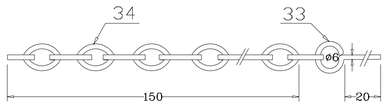

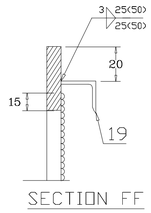

SECTION FF

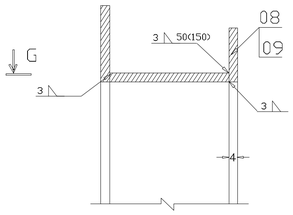

SECTION GG

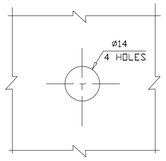

DETAIL H

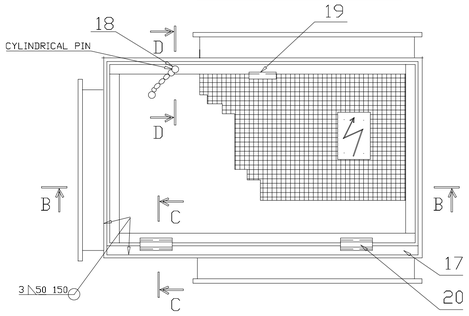

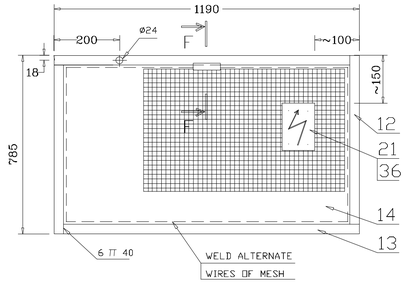

ITEM NO.	DESCRIPTION	DRAWING NO.	MATL SPEC.	UNIT	QTY
43.	MANUFACTURER'S NAMEPLATE				1
42.	SH 3.5X166X650		IS 1079 63-ST 34		4
41.	GASKET 15MM THICK.		NEOPRENE		2
40.	NUT M8		IS 1363-B-4		2 4
39.	BOLT M8X40		IS 1875 CL VI		2 4
38.	BLANKING PLATE 3.15X650X650				1
37.	PVC SLEEVE FOR CHAIN		NATURAL COLOUR		1
36.	SNAP HEAD RIVET 5X10		IS 2155 M.S		8
35.	NUT M12		IS 1363-B-4		2
34.	LINK CHAIN WIRE ø 2 L=150				1
33.	PIN ø6-40				1
32.	PL. 250X300X10		IS 2062		2
31.	HINGE	2-79-006-00075			1
30.	HANDLE ROUND ø12-240		IS 1875 CL.VI		2
29.	GASKET 15X15		NEOPRENE		1
28.	ECCENTRIC LOCK	2-79-006-00148			8
27.	HOOK PL.5X25X39		IS 2062		4
26.	CU BRAIDED CABLE		IS 282		1
25.	BOLT RODø22X35		IS 1875 CL VI		2
24.	SH 3.15X35X1230		IS 1079-ST.34		2
23.	SH 3.15X35X812		IS 1079-ST.34		2
22.	DOOR SH 3.15X824X1230		IS 513		1
21.	WARNING SIGN	4-79-006-00267			2
20.	HINGE L100				2
19.	L 50 50X6 L=100		IS 2062		1
18.	ROUND ø 16 L=25		IS 2062		1
17.	PLATE 6X40X1230		IS 2062		1
16.	PLATE 6X20X1230		IS 2062		1
15.	PLATE 6X40X824		IS 2062		2
14.	WIRE MESH 785X1190 THREAD ø2.5X20X20				1
13.	PL.3.15X30X1190		IS 2062		2
12.	PL.3.15X30X785		IS 2062		2
11.	TUBE ø21.6X2-45		IS 1239		2
10.	L50X50X6, 800 LONG		IS 2062		2
09.	FLANGE PL.6X25X650		IS 2062		8
08.	FLANGE PL.6Xø680		IS 2062		1
07.	SH-3.15X170X594		IS 1079-ST.34		4
06.	SH-3.15X66X1561		IS 1079 st 34		1
05.	SH-3.15X875X1230		IS 513		1
04.	SH-3.15X875X1230		IS 513		1
03.	SH-3.15X875X1230		IS 513		1
02.	SH-3.15X824X875		IS 513		1
01.	SH-3.15X824X875		IS 513		1

REV	DATE	ALTD	CHD	APPD

STANDARD

BHARAT HEAVY ELECTRICALS LIMITED, UNIT: BOILER AUXILIARIES PLANT, RANIPET:632 406.

DEPT CODE M		NAME	SIGN	DATE
	DRN	PST	-SD-	12.05.2020
	DESN	PST	-SD-	12.05.2020
	CHD	AKP	-SD-	12.05.2020
	APPD	M.J.M		12.05.2020

TITLE: DISCONNECTNG SWITCH ASSEBLY (95 KV SYSTEM)

BHEL/BAP DRG.NO. 1-00-114-29394

SCALE : N.T.S

—

SHEET 01 OF 03

00

Size A1

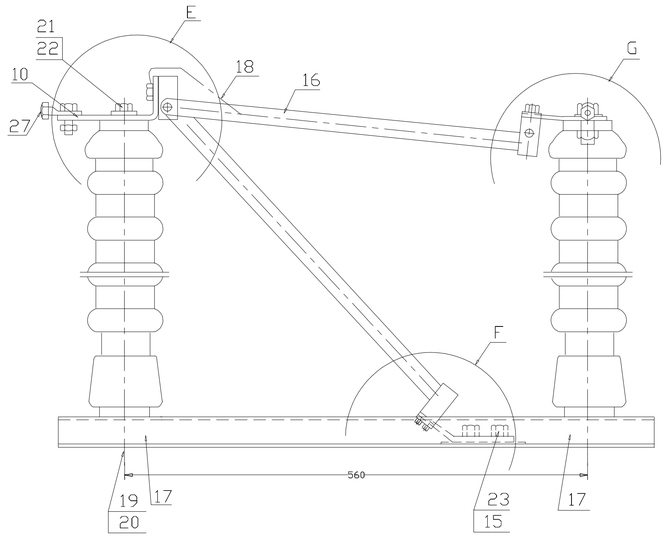

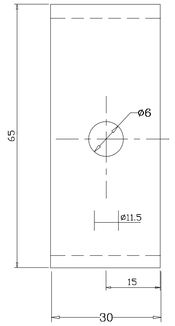

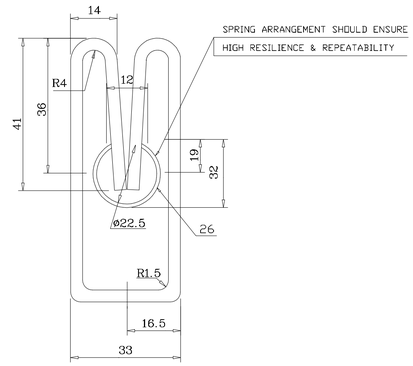

DET.POS. 03

NOTE: TO BE BRIGHTLY NICKEL PLATED.

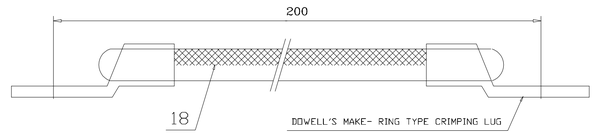

INDUSTRIAL GRADE STRANDED BRAIDED TINNED COPPER WIRE 7 STRANDS L-180(MIN) IS 282 EACH STRAND CONTAINS 300 NOs.(APPROX.) 38SWG WIRE.

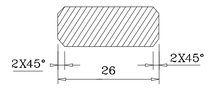

SECTION - AA

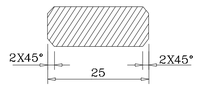

SECTION - CC

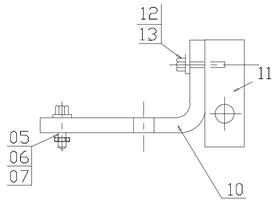

DETAIL - E

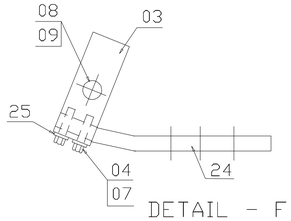

DETAIL - F

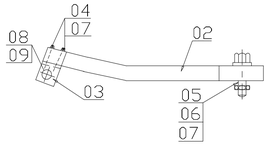

DETAIL - G

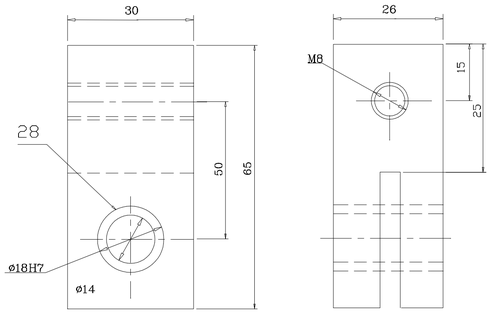

NOTE: TO BE BRIGHTLY NICKEL PLATED.

DET.POS. 11

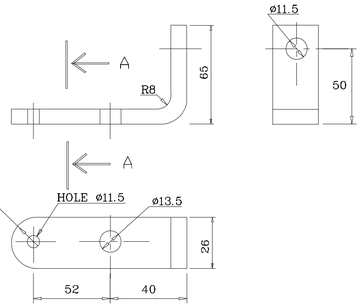

DET.POS. 10

NOTE : TO BE BRIGHTLY NICKEL PLATED.

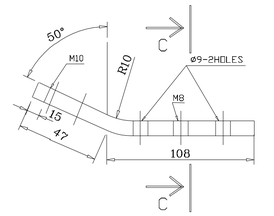

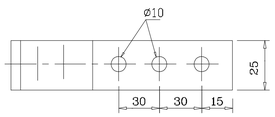

DET.POS. 24

NOTE: TO BE BRIGHTLY NICKEL PLATED.

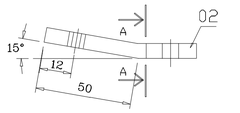

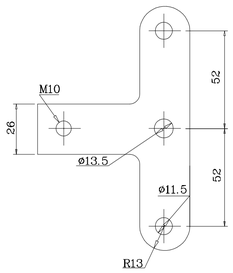

NOTE : TO BE BRIGHTLY NICKEL PLATED.

DET.POS. 02

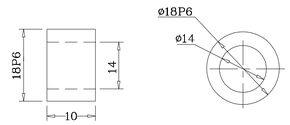

DET.POS. 28

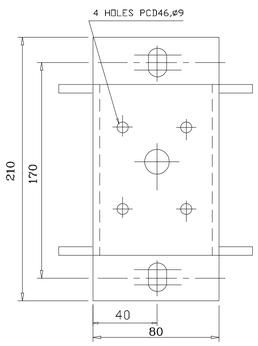

DETAIL-H

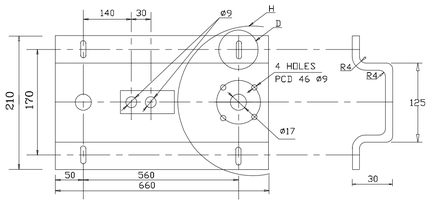

NOTE : TO BE PAINTED WITH EPOXY PAINT.

DET.POS. 17

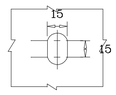

DETAIL - D

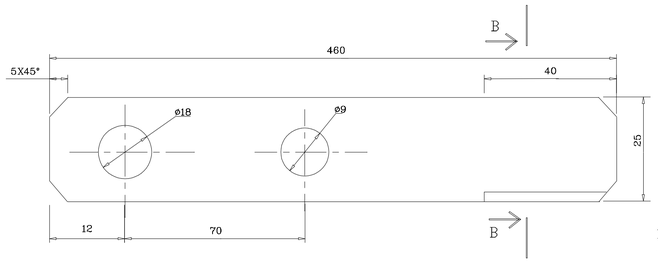

DET.POS. 16

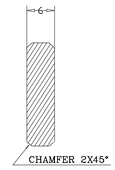

SECTION - BB

ITEM NO.	DESCRIPTION	DRAWING NO.	MATL SPEC.	UNIT	QTY
28	GUIDE CONTACT BUSH		BRASS	NO	2
27	CONNECTING SCREW	1-79-006-00068	IS 2062	NO	3
26	SPRING 16 SWG		SPRING QUALITY PHOSPHUR BRONZE	NO	2
25	LUG:25SQ.MM		BRASS	NO	1
24	CLAMP PL.10X26X120		BRASS	NO	1
23	SCREW M8X16		IS 1363-8-46	NO	3
22	SPRING WASER M12 NATURAL FINISH		IS3063	NO	2
21	SCREW M12X25		IS 1363-633-4-6	NO	2
20	SPRING WASHER M16 NATURAL FINISH		IS 3063	NO	2
19	SCREW M18X32		IS 1363-B-4-6	NO	2
18	CABLE WITH LUG		IS 282	NO	1
17	FASTENING PLATE		IS 1079-633-34	NO	2
16	KNIFE PL. 6X25X460		COPPER	NO	1
15	NUT M8		IS 1663-B-4	NO	3
14	BLANK				
13	SPRING WASHER M8 NATURAL FINISH		GI IS 3063	NO	2
12	SCREW M8X30			NO	2
11	GUIDE CONTACT PL.32X30X70		IS-2062 STEEL	NO	1
10	CLAMP PL.10X26X153		BRASS	NO	1
09	NUT M6		IS1363-B-4	NO	2
08	SCREW M6X45		GI IS2269-B-8.8	NO	2
07	WASHER M10		GI IS2016 STEEL	NO	5
06	NUT M10		IS1363-B-4	NO	1
05	SCREW M10X32		IS1363-B-4.6	NO	3
04	SCREW M10X19		IS1363-B-4.6	NO	4
03	KNIFE CONTACT SH-315X30X249		COPPER	NO	2
02.	CLAMP PL.10X26X205		BRASS	NO	1
01.	PIN INSULATOR	370MM		NO	3

REV	DATE	ALTD	CHD	APPD

STANDARD

BHARAT HEAVY ELECTRICALS LIMITED, UNIT: BOILER AUXILIARIES PLANT, RANIPET-632 406.

DEPT CODE		NAME	SIGN	DATE
M	DRN	PST	-SD-	12.05.2020
	DESN	PST	-SD-	12.05.2020
	CHD	AKP	-SD-	12.05.2020
	APPD	M.J.M		12.05.2020

TITLE: DISCONNECTNG SWITCH ASSEBLY (95 KV SYSTEM)

BHEL/BAP DRG.NO. 1-00-114-29395

SCALE : N.T.S

SHEET 03 OF 03

00

Size A1

ALL DIMENSIONS ARE IN MILLIMETRES

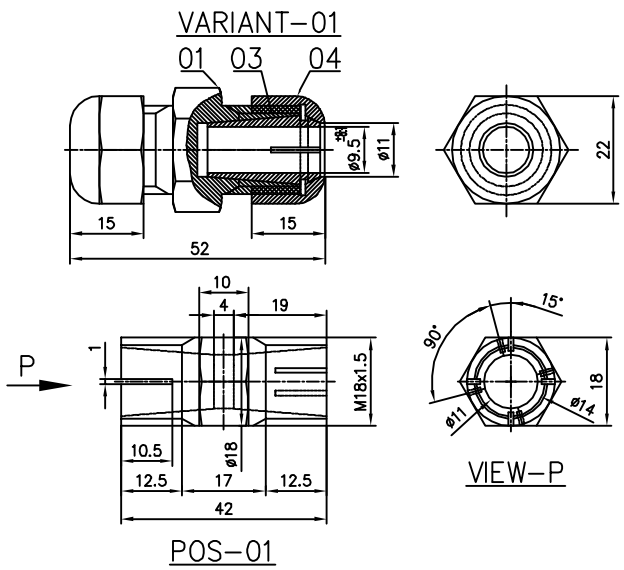

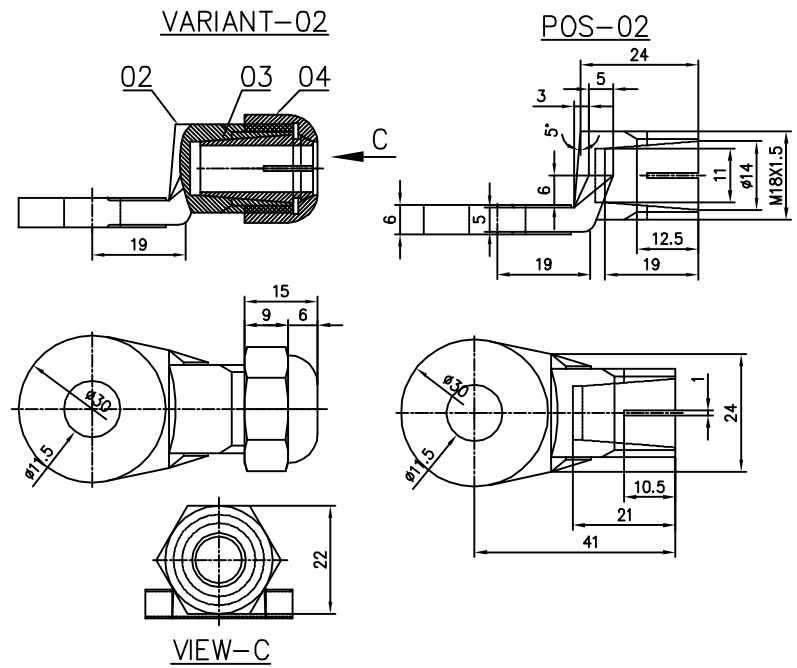

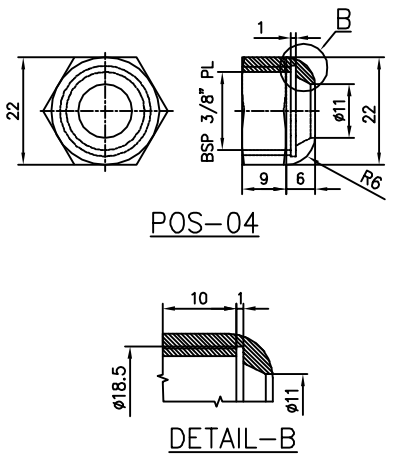

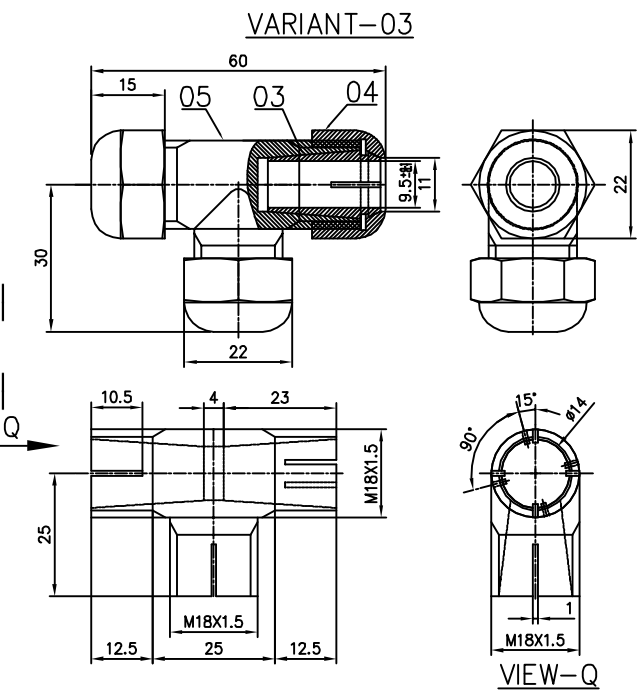

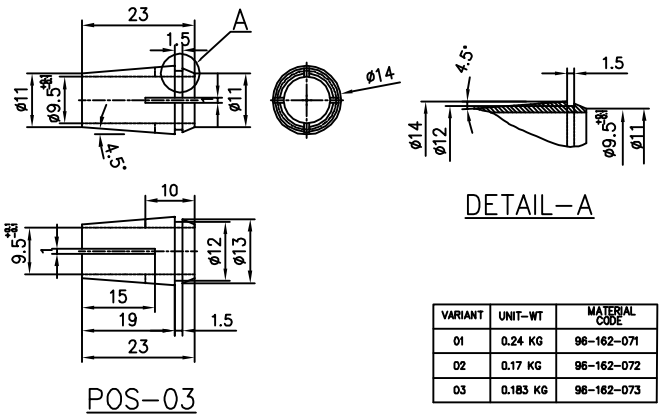

NOTES:-

SURFACE TO BE FINISHED BY NICKEL PLATING OF TH 40 μ.

VARIANT	UNIT-WT	MATERIAL CODE
01	0.24 KG	96-162-071
02	0.17 KG	96-162-072
03	0.183 KG	96-162-073

VARIANT NO	ITEM NO	DESCRIPTION	STD	DRAWING NO.	ITEM NO	MATL. CODE / MATL. SPEC	A / C	DI	UNIT	UNIT WT. / QUANTITY	DI	ZONE
	05	TEE				LEADED BRASS						
	04	ADAPTOR								0.060		
03	03	SLEEVE				AS PER				3		
	04	ADAPTOR								0.020		
	03	SLEEVE				IS 3488-86/				3		
02	02	LUG				BS 2847 CZ 122				0.050		
	04	ADAPTOR								1		
	03	SLEEVE				BS 2847 CZ 122				0.020		
01	01	UNION SCREW				BS 2847 CZ 122				1		
						BS 2847 CZ 122				0.020		
						BS 2847 CZ 122				1		
						BS 2847 CZ 122				0.100		
						BS 2847 CZ 122				1		
						BS 2847 CZ 122				0.050		
										2		
						BS 2847 CZ 122				0.020		
										2		
						96 162 071				0.100		
						BS 2847 CZ 122				1		

REV	DATE	ALTERED			REV	DATE	ALTERED			REV	DATE	ALTERED			REV	DATE	ALTERED		
07	10.03.2012	CHECKED	C.Ganesh		06	20.03.1996	CHECKED	S.Rangarajan		05	28.06.1993	CHECKED		-SD-					-SD-
ZONE	Retraced in AutoCAD				ZONE	Nickel plating thickness altered from 40microns to 15 microns				ZONE	SPECIFICATION NUMBER CHANGED								

REV	DATE	ALTERED			REV	DATE	ALTERED	P.V.D		-SD-	REV	DATE	ALTERED	P.V.D		-SD-	REV	DATE	ALTERED	P.V.D		-SD-
04	06.09.1990	CHECKED		-SD-	03	06.03.1989	CHECKED			-SD-	02	20.09.1984	CHECKED	GM		-SD-	01	08.11.1983	CHECKED	GM		-SD-
ZONE	MATERIAL SPECIFICATION CHANGED				ZONE	VARIANT-03 ADDED CHROMIUM PLATING CHANGED TO NICKEL PLATING					ZONE	POS 01 & 03 INTERNAL PARALLEL BORE CHANGED TO TAPER, M16 THREAD CHANGED TO M18X1.5 AND PROVISION FOR SPANNER HOLD.					ZONE	NOTES CORRECTED				

CAUTION: The information on this drawing is the property of BHARAT HEAVY ELECTRICALS LTD. It must not be used directly or indirectly in any way detrimental to the interest of the company.

TYPE OF PRODUCT OR NAME OF CUSTOMER/PROJECT: ELECTROSTATIC PRECIPITATOR

BHARAT HEAVY ELECTRICALS LTD.
UNIT: BOILER AUXILIARIES PLANT.
RANIPET - 632 406.

	NAME	SIGN	DATE	NO. OF VAR.
DRN	G.M.NATHAN		08.05.1992	
CHD	G.M		27.12.1992	
APPD	G.S		27.12.1992	

DEPT/ACCS	GRADE OF UNTOL.DIM	SCALE	WEIGHT (KG).	REF. TO ASSY/OLD DRG.	ITEM NO.	NO. OF ITEMS
CODE 862	C / M / F	N.T.S			-	

TITLE: CONNECTING SCREW
VARIANT-01,VARIANT-02 & VARIANT-03

CARD CODE: U 01

DRAWING NO. 1-79-006-00068 REV 07

Size A1

DRAWING NO.

93680/02/02/22BARP9337/RMSSCCCC

FIRST ANGLE PROJECTION (ALL DIMENSIONS IN MILLIMETRES)

DRAWING NO 2-79-006-00075/02

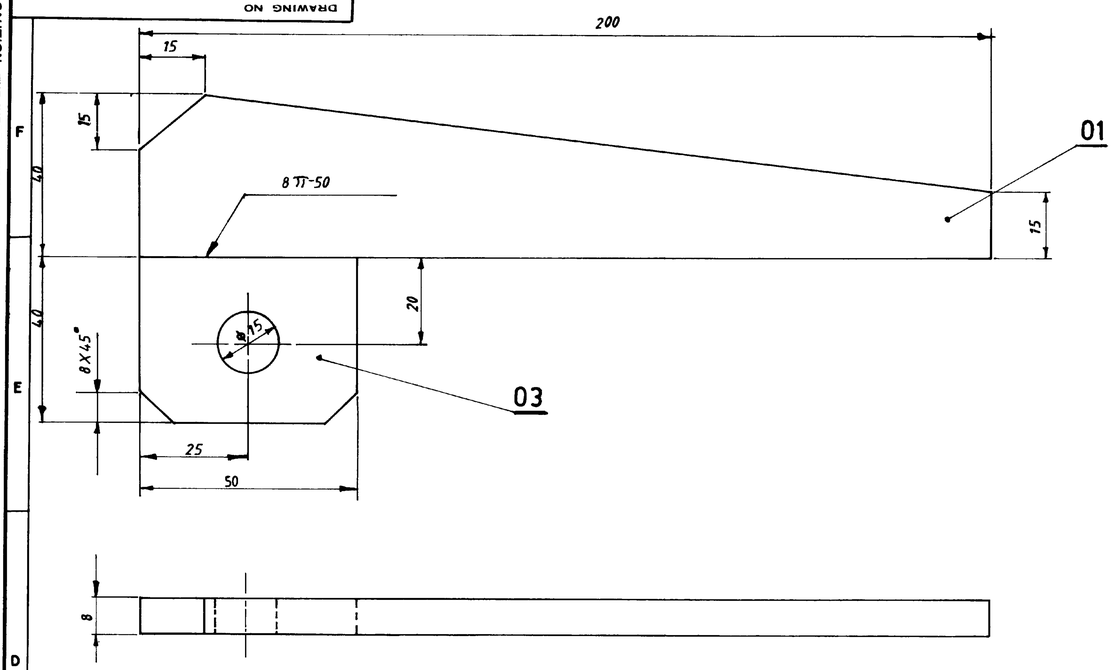

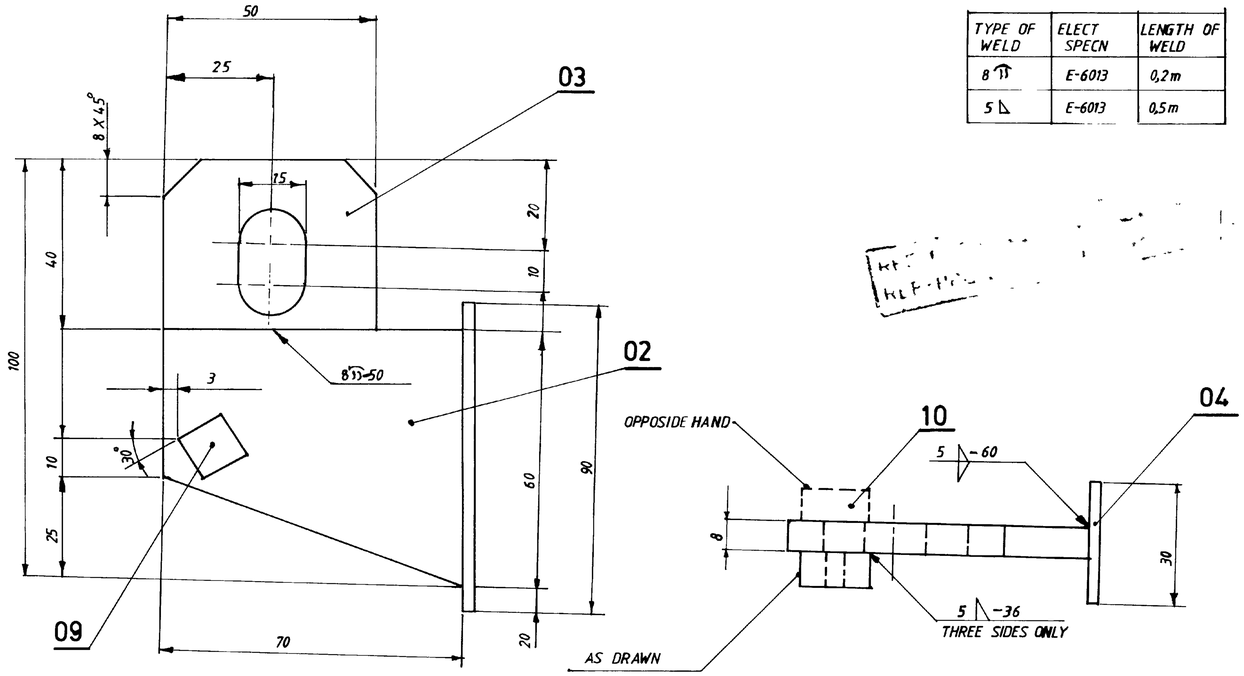

TYPE OF WELD	ELECT SPECN	LENGTH OF WELD
8 TT	E-6013	0,2m
5 ◺	E-6013	0,5m

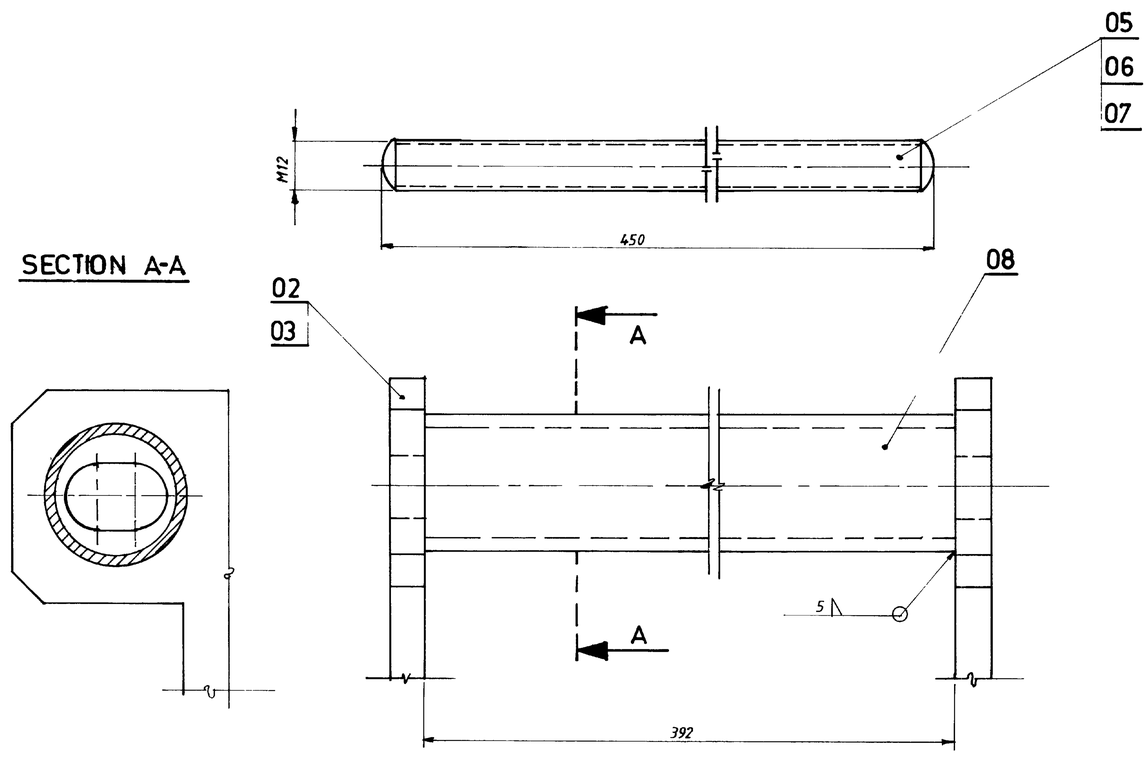

VARIANT NO	ITEM NO.	DESCRIPTION	STD	DRAWING NO	ITEM NO. / VAR NO.	MATL. CODE / MATL SPEC.	A / C	UNIT	UNIT WT. / QTY	GS	ZONE
	10	PLATE 8X12X12				IS-226-			0,01 / 1		
	09	PLATE-8X12X12				IS-226-			0,01 / 1		
	08	TUBE Ø33.7X3, 25-392 LONG				IS-1161- YST 22			0,79 / 1		
	07	NUT-M12				IS 363-B-4			0,017 / 2		
	06	WASHER-M12				IS 2016			0,065 / 2		
	05	ROUND Ø 16 - 450				IS-2062-			0,70 / 1		
	04	PLATE - 5X30X 90				IS 226-			0,1 / 2		
	03	PLATE - 8X 40 X 50				IS-226-			0,13 / 4		
	02	PLATE - 8X60X70				IS-226-			0,26 / 2		
	01	PLATE 8X40X200				IS-226-			0,5 / 2		

REV	DATE	ALTERED / CHECKED
02	20.6.93	ALT. V. Ram / CHD.

IS NUMBER'S YEAR DELETED.
SPECIFICATIONS NUMBER DELETED.

REV	DATE	ALTERED / CHECKED
01		

ZONE

TYPE OF PRODUCT OR NAME OF CUSTOMER/PROJECT: ELECTROSTATIC PRECIPITATOR

Bharat Heavy Electricals Ltd., BOILER AUXILIARIES PROJECT RANIPET 632 406

	NAME	SIGN	DATE	NO. OF VAR
DRN	M BOOPATHY		16.02.85	
CHD	S J P		16 02 85	
APPD	B GOVIDAN		16 02 85	

DEPT	GRADE OF UNTOL DIM	SCALE	WEIGHT (kg)	REF TO ASSY / OLD DRG	ITEM NO.
CODE 862	C/~~MIP~~	1:1	393		

TITLE	CARD CODE	DRAWING NO	REV.
HINGE	U 01	2-79-006-00075	02

RE-TRACED

CAUTION THE INFORMATION ON THIS DOCUMENT IS THE PROPERTY OF BHARAT HEAVY ELECTRICALS LTD. IT MUST NOT BE USED DIRECTLY OR INDIRECTLY IN ANY WAY DETRIMENTAL TO THE INTEREST OF THE COMPANY

R: 05-226 C

FIRST ANGLE PROJECTION (ALL DIMENSIONS IN MILLIMETRES)

DRAWING No. 2-79-006-00148

CAUTION
THE INFORMATION ON THIS DOCUMENT IS THE PROPERTY OF BHARAT HEAVY ELECTRICALS LTD. IT MUST NOT BE USED DIRECTLY OR INDIRECTLY IN ANY WAY DETRIMENTAL TO THE INTEREST OF THE COMPANY.

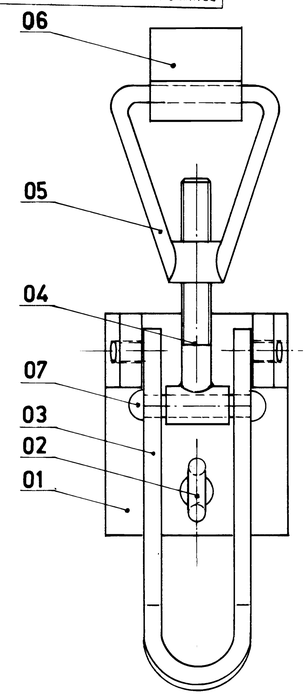

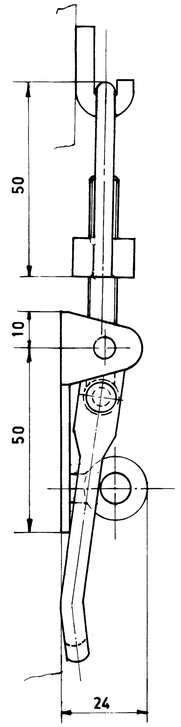

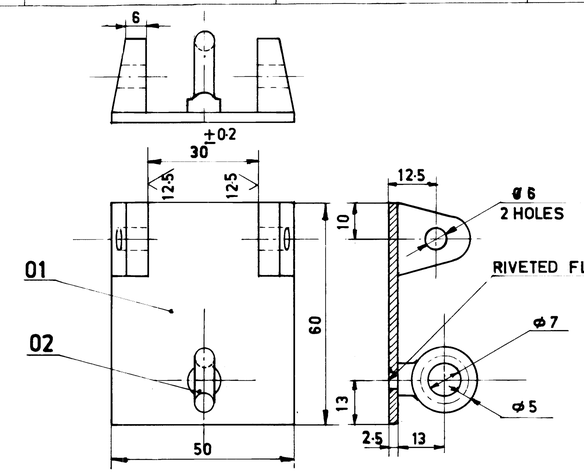

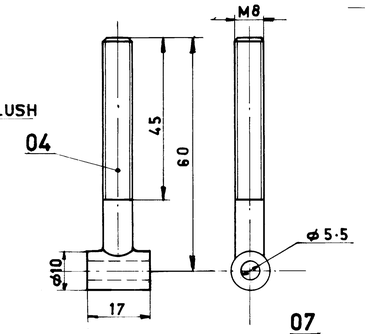

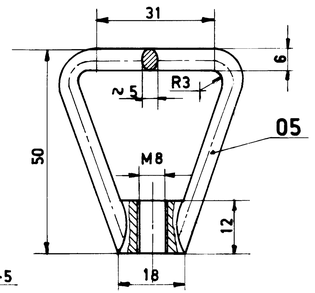

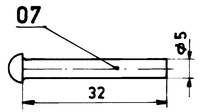

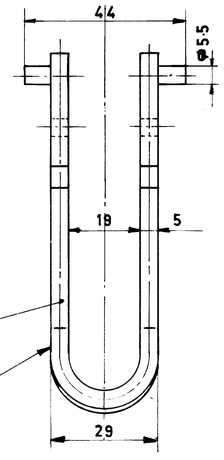

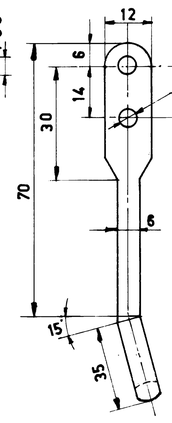

REF : PRQA : 590 FOR PAINTING
REF : PRQA : 500 FOR UNTOL. DIMNS

NOTE:- SUITABLE SURFACE TREATMENT SHALL BE DONE TO PREVENT RUSTING

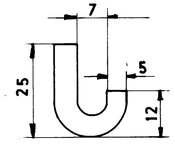

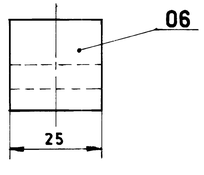

VARIANT NO.	ITEM NO.	DESCRIPTION	STD	DRAWING NO.	ITEM NO. / VAR NO.	MATL CODE / MATL SPEC	A C	UNIT	UNIT WT / QTY	GS	ZONE
	07	RIVET ø5 -32		FORGING		IS 226/62			0.020 / 1		D 2
	06	HOOK		FORGING		IS 226/62			0.030 / 1		A 5
	05	CLAMP		FORGING		IS 226/62			0.030 / 1		E 1
	04	EYE BOLT		FORGING		IS 226/62			0.040 / 1		E 3
	03	LINK ROD 12X5-250		FORGING		IS 226/62			0.12 / 1		D 5
	02	EYE		FORGING		IS 226/62			0.040 / 1		E 5
	01	BRACKET		FORGING		IS1079-63ST 34			0.08 / 1		E 5

TYPE OF PRODUCT OR NAME OF CUSTOMER/PROJECT

Bharat Heavy Electricals Ltd.,
BOILER PLANT UNIT
TIRUCHIRAPALLI-620 014

	NAME	SIGN	DATE
DRN	M. NATRAJ		18.10.81
CHD	S.M.N		
APPD	G.S		20.10.81

NO. OF VAR

REV	DATE	ALTERED / CHECKED
01		

ZONE

DEPT: AQCS
CODE: 250
GRADE OF UNTOL. DIM: -e/M/+
SCALE: 1:1
WEIGHT (kg): 0·38
REF TO ASSY / OLD DRG
ITEM NO.

TITLE: ECCENTRIC LOCK
CARD CODE: U 01
DRAWING NO.: 2-79-006-00148
REV: 00

Size A2

05-228/C

ALL DIMENSIONS ARE IN MILLIMETRES

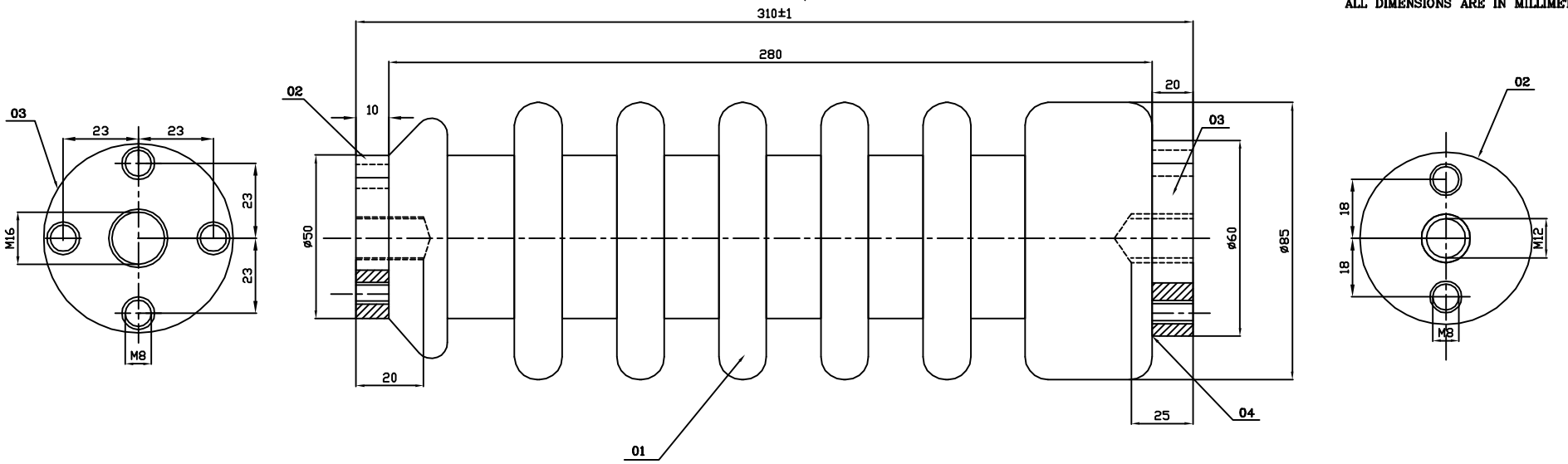

VARIANT NO.	DESCRIPTION	IT. NO.	STD	DRAWING NO.	ITEM / VAR	MATERIAL CODE / MATERIAL SPECN	A/C	COMP GROUP	UNIT WTG (KG) / QUANTITY
04	BINDING MATERIAL					CEMENT MORTOR			
03 △01	PLATE–20, ø 60					IS 2062			
						IS2062			
02 △03	PLATE–10, ø 50					IS 2062 △03			
01	INSULATOR					96–150–132			
						PORCELAIN			

SPECIFICATIONS :

ELECTRICAL TESTING :

1. POWER FREQUENCY DRY WITHSTAND TEST 75KV(RMS) FOR 1 MINUTE. △03
2. IMPULSE FLASH OVER TEST 150KV(PEAK) (LIGHTNING IMPULSE 1.2/50 µS.) △01
3. ELECTRICAL TESTS IN ACCORDANCE WITH CLAUSE 3.3 OF IS 5621/1970.

MATERIAL :

4. INSULATION MATERIAL SHOULD BE OF PORCELAIN GLAZED.
   INSULATOR MUST BE TESTED FOR POROSITY.

NOTE :

THE METAL PARTS SHOULD BE PROVIDED WITH SUITABLE INSERTS FOR PROPER BINDING WITH INSULATOR. △01

THE METAL PART SHALL ALSO HAVE SUITABLE M16 AND M12 INSERTS FOR EXTERNAL FIXING OF INSULATOR.

REV	DATE	ALTERED / CHECKED	REV	DATE	ALTERED / CHECKED	REV	DATE	ALTERED / CHECKED
03	29.06.93	CHECKED	02	04.05.91	CHECKED	01	09.03.83	CHECKED
		1."IS" YEAR REFERENCE DELETED. 2.KV VALUE FOR ELECTRICAL TESTS ALTERED. 3.IS 226 CHANGED TO IS 2062.			SL NO 5. OF SPECIFICATIONS DELETED			1.ITEM NO ADDED. 2.ELECTRICAL SPECIFICATIONS CORRECTED. 3.NOTE ADDED.

CAUTION: The information on this document is the property of BHARAT HEAVY ELECTRICALS LTD. It must not be used directly or indirectly in any way detrimental to the interest of the company.

TYPE OF PRODUCT OR NAME OF CUSTOMER/PROJECT: REDRAWN

BHARAT HEAVY ELECTRICALS LTD., BOILER PLANT UNIT, TIRUCHIRAPALLI – 620 014

	NAME	SIGN	DATE	NO.OF VAR.
ALTERED	U.JEYANTHI	UJ	25.07.78	
CHECKED	RPS		25.07.78	
APPROVED	S.R		25.07.78	

DEPT AQCS	GRADE OF UNTOL.DIM		SCALE	WEIGHT (KG).	REF. TO ASSY/OLD DRG.	ITEM NO.	NO. OF ITEMS
CODE	PR:QA:500		NTS	5	0–79–006–00002		

TITLE	CARD CODE	DRAWING NO.	REV
PIN INSULATION FOR DISCONNECTING SWITCH	U 01	3–79–006–00100	03

Size A3

FIRST ANGLE PROJECTION (ALL DIMENSIONS IN MILLIMETRES)

08-249/C

REV 01	DATE	ALTERED	REV 02	DATE	ALTERED
		CHECKED			CHECKED

CAUTION THE INFORMATION ON THIS DOCUMENT IS THE PROPERTY OF BHARAT HEAVY ELECTRICALS LTD IT MUST NOT BE USED DIRECTLY OR INDIRECTLY IN ANY WAY DETRIMENTAL TO THE INTEREST OF THE COMPANY

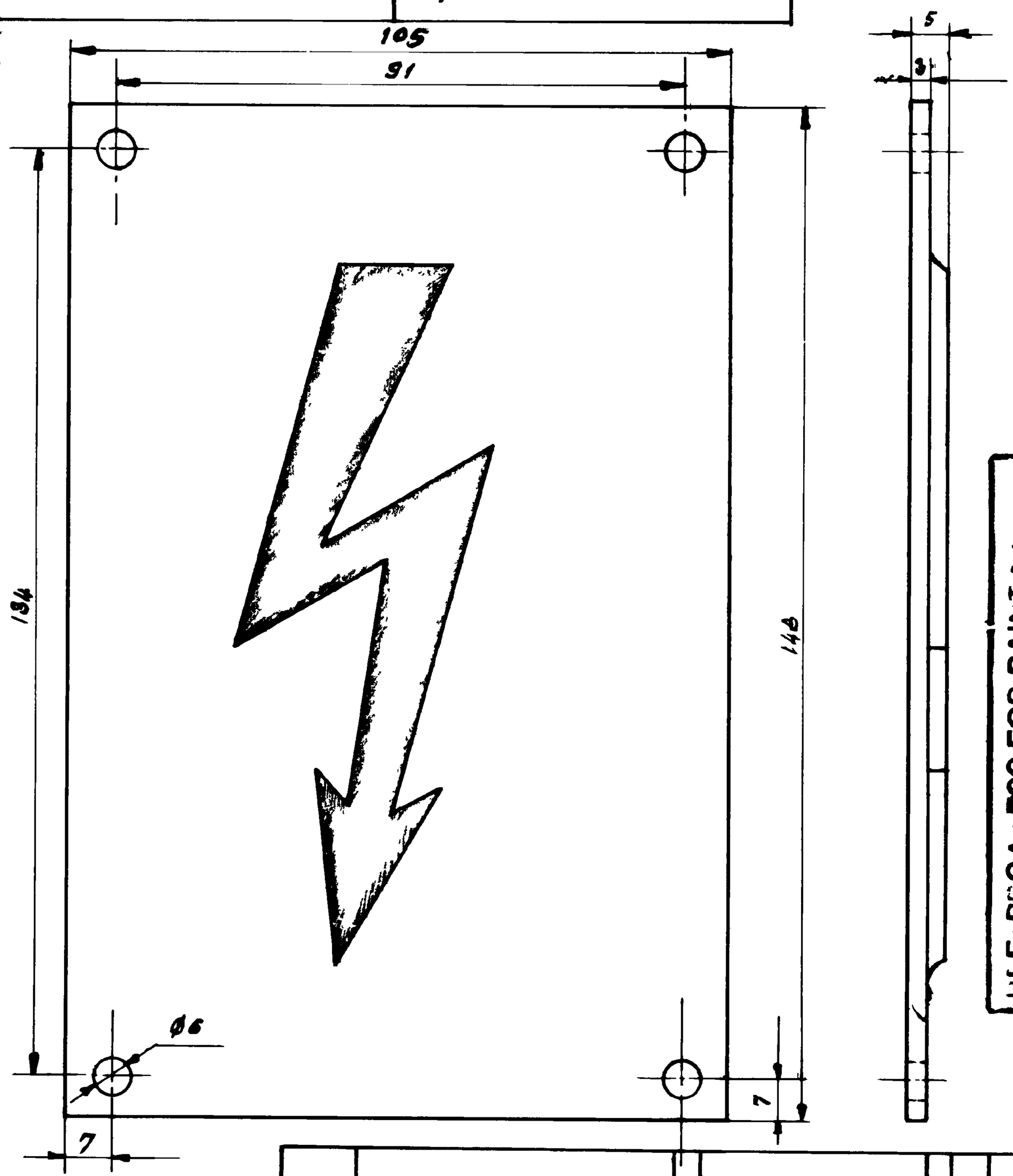

REF: PQA: 590 FOR PAINTING
REF: PSC: 500 FOR UNTOL. DIMNS

NOTE:-
CAST, RED ARROW ON WHITE BACK-GROUND

VARIANT NO.	DESCRIPTION	STD	MATL CODE	A/C	UNIT	UNIT WT
	ALUMINIUM CASTING		MATL SPEC			QTY

MICROFILMED ON 0-249 F 225

Bharat Heavy Electricals Ltd.,
BOILER PLANT UNIT
TIRUCHIRAPALLI-620 014

	NAME	SIGN	DATE
DRN	M. NATRAJ		29-10-81
CHD	SMN		06-11-81
APPD	GS		12-11-81

DEPT.	GRADE OF UNTOL DIM	SCALE	WEIGHT (kg)	REF TO ASSY / OLD DRG	ITEM NO.
ARCS	E/M/F	N.T.S	0.17		
CODE 250					

TITLE	CARD CODE	DRAWING NO	REV
WARNING SIGN	U 01	4-79-006-00267	

Size A4

DRAWING NO. 1-00-114-27571

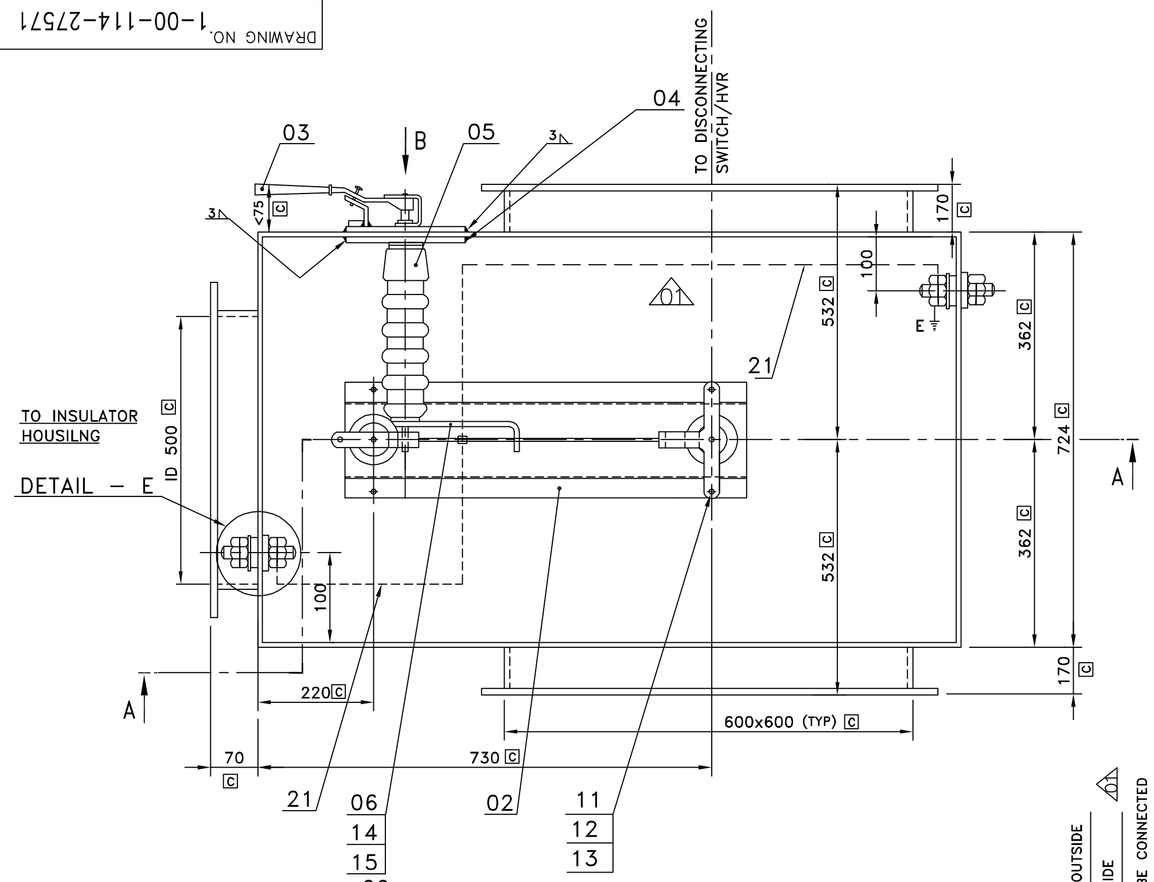

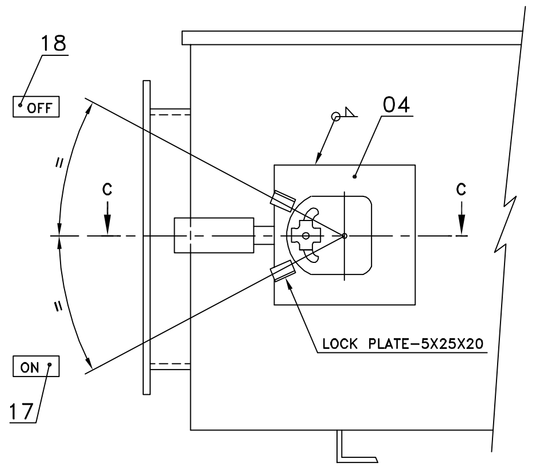

SEALING&HANDLE ARRANGEMENT IS TENTATIVE.ANY OTHER SEALING ARRANGMENT WHICH IS BETTER THAN THIS IS ALSO ACCEPTABLE, SUBJECT TO THE APROVAL BY BHEL

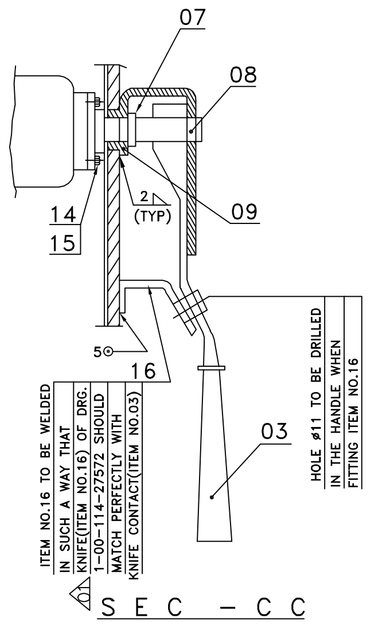

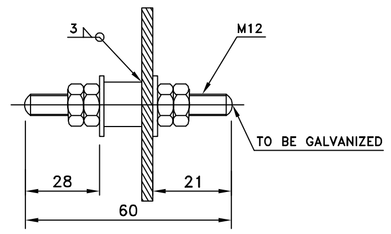

ALL DIMENSIONS ARE IN MILLIMETRES

FOR PRODUCTION
REF.-PR:QA:590 FOR PAINTING
REF.-PR:QA:500 FOR UNTOL. DIMNS.

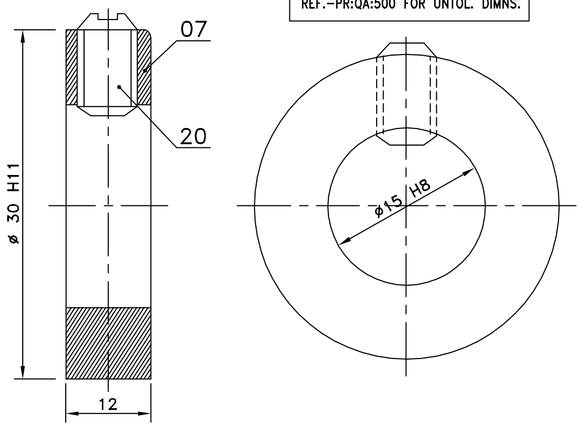

2 NOS. EARTHING BOLTS SHALL BE PROVIDED OUTSIDE AS SHOWN. BOLT HEAD SHALL BE WELDED INSIDE & A COPPER STRIP OF SIZE 25x3mm SHALL BE CONNECTED BETWEEN THE BOLT & THE EARTHING FEMALE CONTACT.

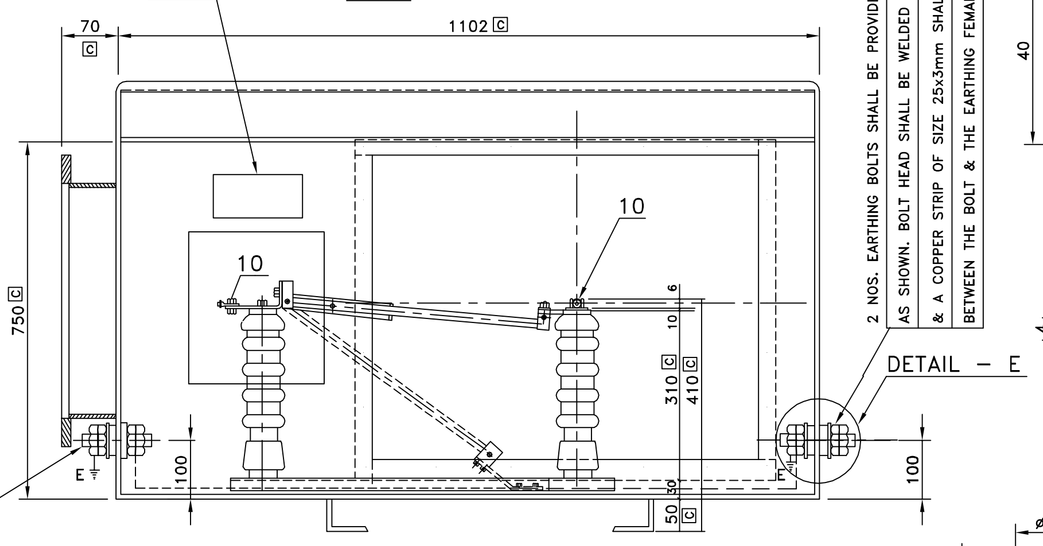

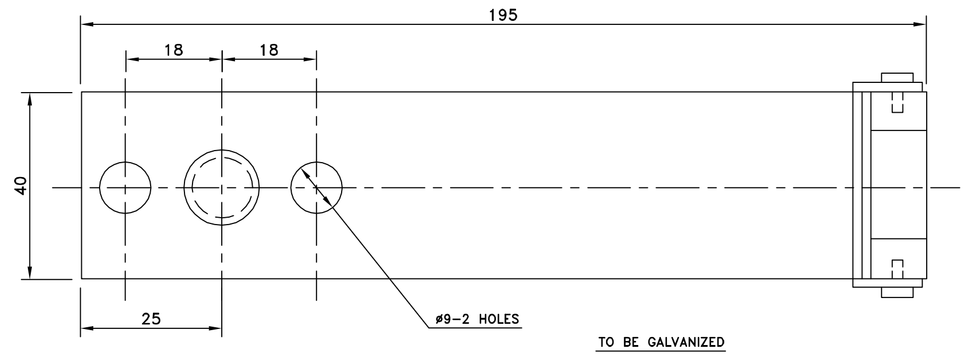

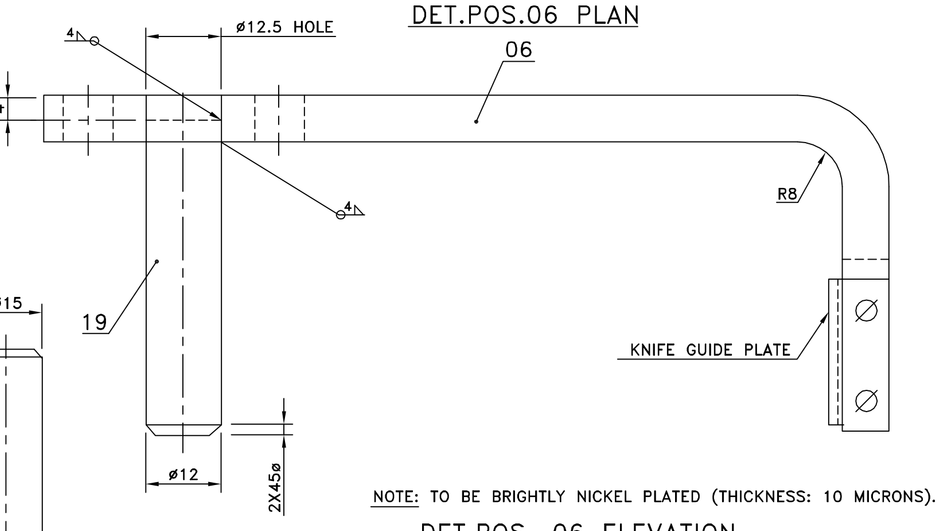

NOTE: TO BE BRIGHTLY NICKEL PLATED (THICKNESS: 10 MICRONS).

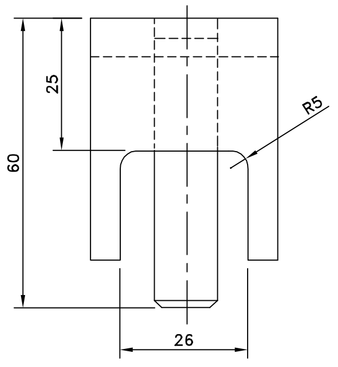

N O T E

01.PACKING DETAILS SHALL BE FURNISHED FOR BAP REVIEW/ APPROVAL.
02.SWITCH ENCLOSURE SHALL BE SUITABLE FOR IP 55 DEGREE OF PROTECTION.
03.COLOUR SHALL BE EPOXY TO SHADE 631 OF IS 5 FINISH.DOUBLE COATING OF OUTER FINISH SHOULD BE GIVEN AFTER RED OXIDE PRIMER TREATMENT.
04.THE IMPULSE VOLTAGE LEVEL SHALL BE 170KV PEAK (BOTH +VE & –VE).
05.THE DIMENSIONS MARKED C ARE CRITICAL AND MUST BE MAINTAINED. ALL OTHER DIMENSIONS ARE TENTATIVE AND IT CAN BE CHANGED TO MAINTAIN THE CRITICAL DIMENSIONS.
06.ALL SUB-VENDOR DRAWINGS ARE SUBJECT TO BHEL APPROVAL.
07.SUPPLIER NAME PLATE SHALL GIVE ALL DETAILS OF : a) NAME OF THE SUPPLIER , b) SL. NO, c) VAR. NO, d)YEAR OF MANUFACTURE AND e) ADDRESS.
08.NAME PLATE SHALL BE OF ANODISED ALUMINIUM AND IT SHOULD BE FIXED SUITABLY.

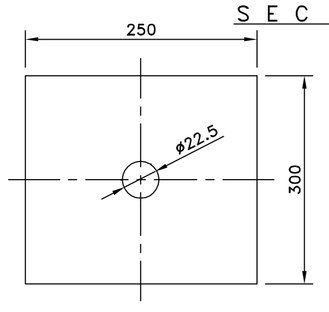

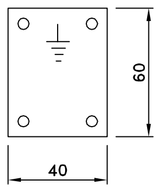

NOTE: ENGRAVE THE SYMBOL

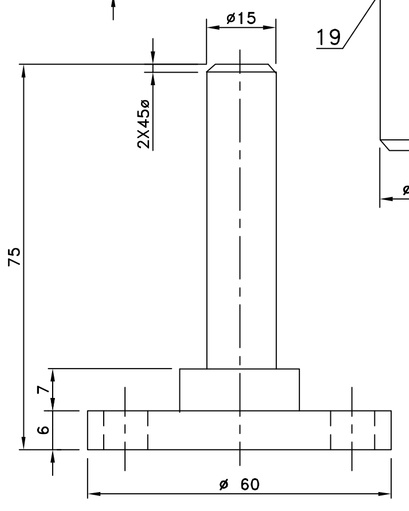

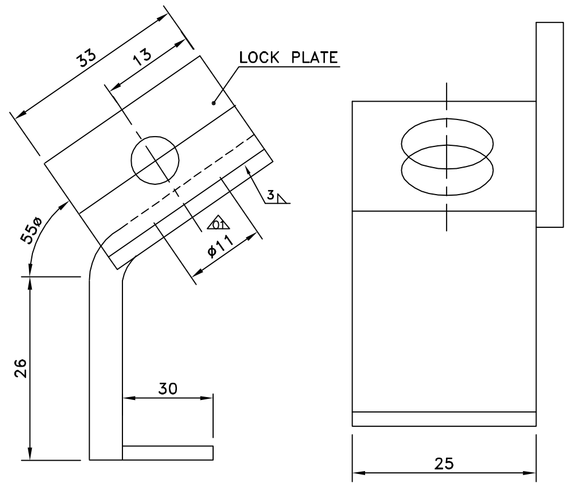

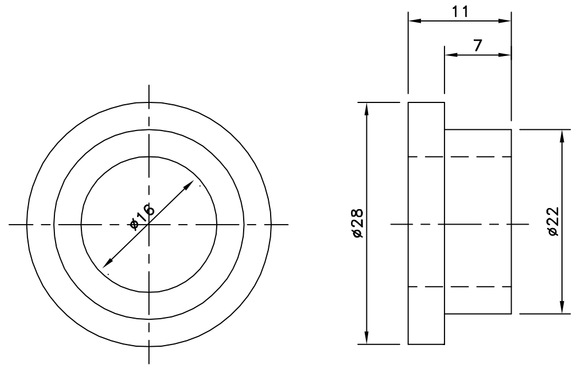

VAR. NO.	ITEM NO.	DESCRIPTION	STD	DRAWING NO.	ITEM NO. / VAR. NO.	MATL CODE / MATL SPEC.	A C I	UNIT	UNIT WT. / QTY	GS	ZONE
	22.	MANUFACTURER NAME PLATE							1		
△1	21.	COPPER STRIP 25x3mm							0.723 / 2	△1	
	20.	GRUB SCREW M6X6				IS 2388-P-6.6			0.002 / 1		
	19.	ROUND ø 12-56				IS 2062			0.050 / 1		
	18.	ENGRAVED METAL NAME PLATE – 'OFF'							0.001 / 1		
	17.	ENGRAVED METAL NAME PLATE – 'ON'							0.001 / 1		
	16.	LOCK PL. 5X25X55				IS 2062			0.063 / 2		
	15.	WASHER M8				IS 2016			0.002 / 6		
	14.	SCREW M8X16				IS 1363-B-4.6			0.012 / 6		
	13.	WASHER M12				IS 2016			0.006 / 7		
	12.	NUT M12				IS 1363-B-4.6			0.017 / 4		
	11.	SCREW M12X22				IS 1363-B-4.6			0.035 / 4		
	10.	CONNECTING SCREW		1-79-006-00068		STYLE 02			0.113 / 3		
	09.	BUSHING ROUND ø28-11				IS 306 GR.G2 COMM. BRASS			0.700 / 1		
	08.	PIVOT ROUND ø60-75				IS 1875 CL VI			1.840 / 1		
	07.	SET RING 15 PL.12-35ø				IS 2062			0.041 / 4		
	06.	LEVER PL.8X40X231				IS 2062			0.600 / 1		
	05.	PIN INSULATOR		3-79-006-00100		96-150-132			5.000 / 3	△1	
	04.	PL. 10X250X300				IS 2062			1.900 / 1		
	03.	HAND LEVER		2-79-006-00149					1.290 / 1		
	02.	DISCONNECTING SWITCH							16.840 / 1		
	01.	SWITCH BOX STYLE-05		1-00-114-27570					151.330 / 1		

REV	DATE	ALTERED / CHECKED
01	30.01.13	R.Kabir / [illegible]

01.QTY OF ITEM NO 05 REVISED FROM 1 TO 3.
02.QTY OF ITEM NO 21 INDICATED AS 2.
03.IN ZONE B2 COPPER WIRE SHOWN FOR SECOND EARTH POINT.

CAUTION: The information on this document is the property of BHARAT HEAVY ELECTRICALS LTD. It must not be used directly or indirectly in any way detrimental to the interest of the company.

TYPE OF PRODUCT
OR NAME OF
CUSTOMER/PROJECT

BHARAT HEAVY ELECTRICALS LTD.,
UNIT: BOILER AUXILIARIES PLANT.
RANIPET – 632 406.

	NAME	SIGN	DATE	NO.OF VAR.
DRN		–sd–	11.01.01	–
CHD	R.VR	–sd–	12.01.01	
APPD	S.R	–sd–	13.01.01	

DEPT	GRADE OF UNTOL.DIM	SCALE	WEIGHT (KG).	REF. TO ASSY/OLD DRG.	ITEM NO.	NO. OF ITEMS
AQCS		N.T.S	----		–	–
CODE 862	PR:QA:500					

TITLE: DISCONNECTING SWITCH ASSEMBLY VAR-05

CARD CODE: U 01

DRAWING NO. 1-00-114-27571 REV 01

Size A1

DRAWING NO. 1-00-114-27572

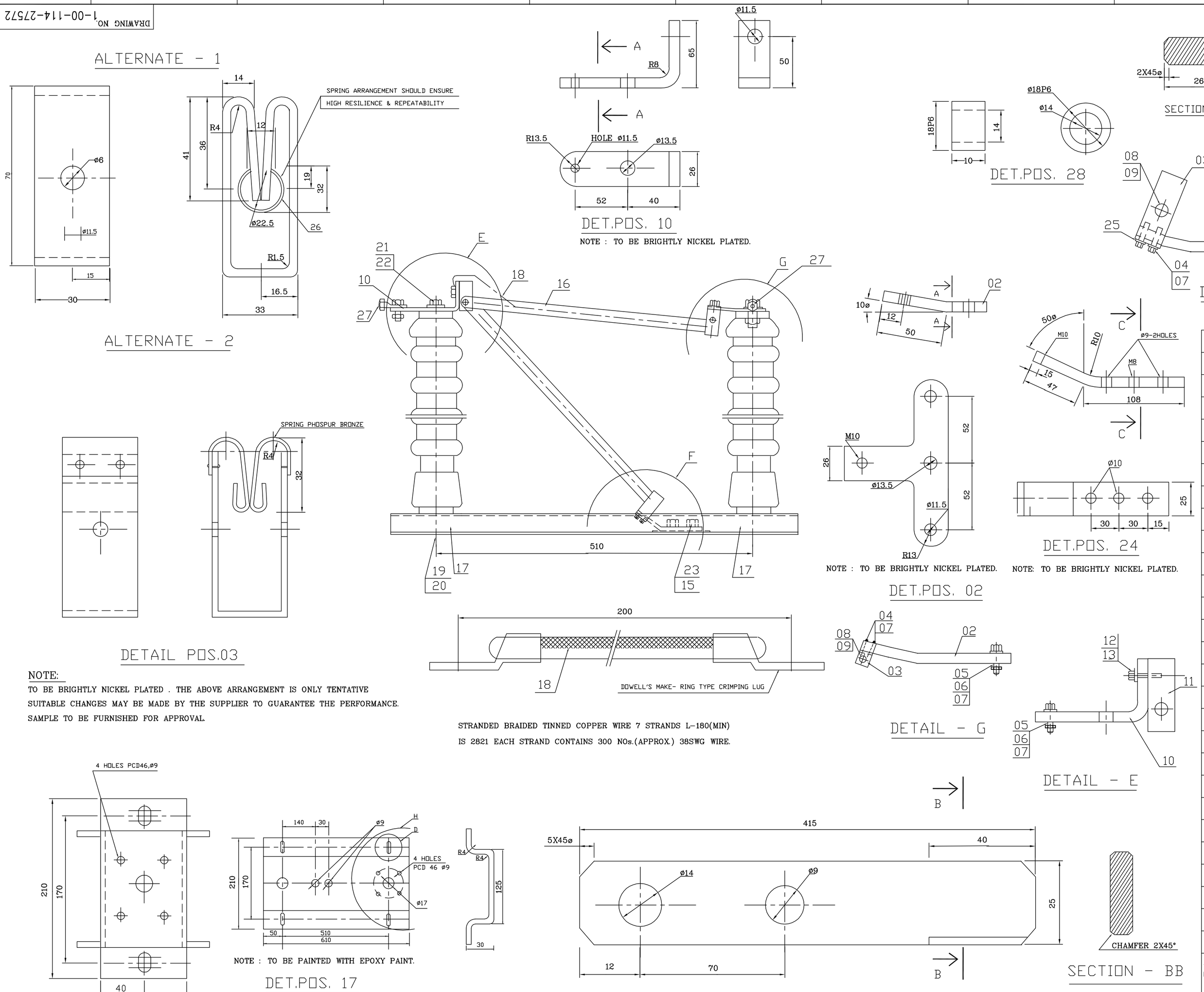

NOTE:

TO BE BRIGHTLY NICKEL PLATED . THE ABOVE ARRANGEMENT IS ONLY TENTATIVE SUITABLE CHANGES MAY BE MADE BY THE SUPPLIER TO GUARANTEE THE PERFORMANCE. SAMPLE TO BE FURNISHED FOR APPROVAL.

NOTE : 01. THE KNIFE IS TO BE STRAIGHTENED AFTER FINISHING.
02. TO BE BRIGHTLY NICKEL PLATED.

VAR. NO.	ITEM NO.	DESCRIPTION	STD	DRAWING NO.	ITEM NO. / VAR. NO.	MATL CODE / MATL SPEC.	A-C	UNIT	UNIT WT. / QTY	GS	ZONE
	28.	GUIDE CONTACT BUSH				BRASS			2		
	27.	CONNECTING SCREW		1-79-006-00068 △1		IS-2062			3 △1		
	26.	SPRING 16 SWG				SPRING QUALITY PHOSPHUR BRONZE			0.100		
	25.	LUG:25SQ.MM							1		
	24.	CLAMP PL.10X26X120				BRASS			0.245		
	23.	SCREW M8X16							1		
	22.	SPRING WASER M12 NATURAL FINISH				IS1363-8-46			0.012		
						IS3063			3		
	21.	SCREW M12X25							0.003		
	20.	SPRING WASHER M16 NATURAL FINISH				IS 1363-B-46			2		
	19.	SCREW M18X32				IS3063			0.035		
	18.	CABLE WITH LUG				IS 1363-B-4-6			2		
	17.	FASTENING PLATE							0.008		
	16.	KNIFE				IS 1079-633-34			2		
	15.	NUT M8				COPPER			0.085		
	14.					IS 1663-B-4			2		
	13.	SPRING WASHER M8 NATURAL FINISH							0.200		
	12.	SCREW M8X30				GALVANISED IS 3063			1		
	11.	GUIDE CONTACT PL.32X30X70							2.800		
	10.	CLAMP PL.10X26X153				IS 1079-633-34			2		
	09.	NUT M6							0.300		
	08.	SCREW M6X45				COPPER			1		
	07.	WASHER M10							0.004		
	06.	NUT M10				IS 1663-B-4			3		
	05.	SCREW M10X32							0.001		
	04.	SCREW M10X19				GALVANISED IS 3063			2		
	03.	KNIFE CONTACT SH-3.15X30X249							0.008		
	02.	CLAMP PL.10X26X205							2		
	01.	PIN INSULATOR		3-79-006-00100		STEEL IS-2062			0.530		
									2		
									0.310		
						BRASS			1		
									0.002		
						IS1363-B-4			2		
									0.008		
						IS2269-B-8.8			2		
						GALVANISED IS2016 STEEL			0.004		
									5		
									0.011		
						IS1363-B-4			1		
									0.031		
						IS1363-B-4.6			3		
									0.021		
						IS1363-B-4.6			4		
									0.300		
						COPPER			2		
									0.420		
						BRASS			1		
						96-150-132			5.000		
									3 △1		

REV	DATE	ALTERED / CHECKED
01	30.01.13	R. Inbar / R. Prem

01.QTY OF ITEM NO 01 REVISED FROM 2 TO 3.
02.QTY OF ITEM NO 27 INDICATED AS 3.

CAUTION: The information on this drawing is the property of BHARAT HEAVY ELECTRICALS LTD. It must not be used directly or indirectly in any way detrimental to the interest of this company.

TYPE OF PRODUCT
OR NAME OF
CUSTOMER/PROJECT

BHARAT HEAVY ELECTRICALS LTD.,
UNIT: BOILER AUXILIARIES PLANT.
RANIPET - 632 406.

	NAME	SIGN	DATE	NO. OF VAR.
DRN		-sd-	11.01.01	-
CHD	R.VR	-sd-	12.01.01	
APPD	S.R	-sd-	13.01.01	

DEPT	GRADE OF UNTOL DIM	SCALE	WEIGHT (KG).	REF. TO ASSY/OLD DRG.	ITEM NO.	NO. OF ITEMS
AQCS						
CODE 862	PR:QA:500	N.T.S	----		-	-

TITLE: DISCONNECTING SWITCH ASSEMBLY VAR-05

CARD CODE: U 01

DRAWING NO. 1-00-114-27572

REV 01

Size A1

DRAWING NO. 1-00-114-27570

ALL DIMENSIONS ARE IN MILLIMETRES

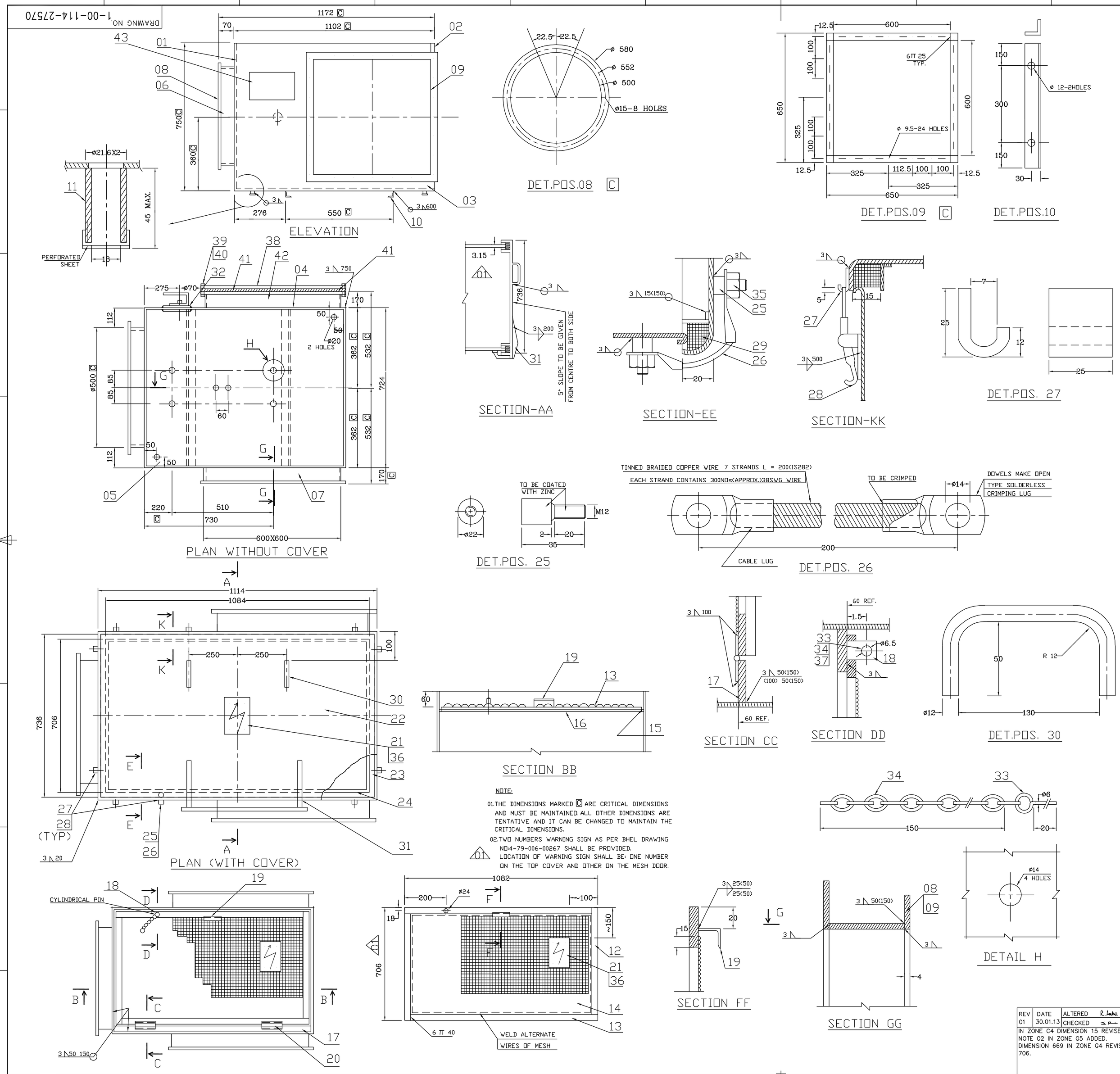

NOTE:

01. THE DIMENSIONS MARKED Ⓒ ARE CRITICAL DIMENSIONS AND MUST BE MAINTAINED. ALL OTHER DIMENSIONS ARE TENTATIVE AND IT CAN BE CHANGED TO MAINTAIN THE CRITICAL DIMENSIONS.

02. TWO NUMBERS WARNING SIGN AS PER BHEL DRAWING NO:4-79-006-00267 SHALL BE PROVIDED. LOCATION OF WARNING SIGN SHALL BE: ONE NUMBER ON THE TOP COVER AND OTHER ON THE MESH DOOR.

VAR. NO.	ITEM NO.	DESCRIPTION	STD	DRAWING NO.	ITEM NO. / VAR. NO.	MATL CODE / MATL SPEC.	A-C	UNIT	UNIT WT. / QTY	GS	ZONE
	43.	MANUFACTURER'S NAMEPLATE							1		
	42.	SH 3.5X166X594							0.97		
	41.	GASKET 15MM THICK.				IS 1079 63-ST 34			4		
	40.	NUT M8				NEOPRENE			0.000		
	39.	BOLT M8X40				IS 1363-B-4			2		
	38.	BLANKING PLATE 3.15X650X650				IS 1875 CL VI			0.005		
	37.	PVC SLEEVE FOR CHAIN							2.4		
	36.	SNAP HEAD RIVET 5X10				NATURAL COLOUR			0.021		
	35.	NUT M12				IS 2155 M.S			2.4		
	34.	LINK CHAIN WIRE ø 2 L=150				IS 1363-B-4			10.450		
	33.	PIN Ø6-40							1		
	32.	PL. 250X300X10							0.050		
	31.	HINGE	2-79-006-00075			IS 2062			1		
	30.	HANDLE ROUND Ø12-240				IS 1875 CL.VI			0.002		
	29.	GASKET 15X15				NEOPRENE			8		
	28.	ECCENTRIC LOCK	2-79-006-00148						0.017		
	27.	HOOK PL.5X25X39				IS 2062			2		
	26.	EARTHING CABLE L200				IS 282			0.010		
	25.	BOLT ROD Ø22X35				IS 1875 CL VI			1		
	24.	SH 3.15X35X1078				IS 1079-ST.34			1.350		
	23.	SH 3.15X35X690				IS 1079-ST.34			2		
	22.	DOOR SH 3.15X777X1155				IS 513			3.930		
	21.	WARNING SIGN	4-79-006-00267						1		
	20.	HINGE L100							0.100		
	19.	L 50 50X6 L=100				IS 2062			0.210		
	18.	ROUND ø 16 L=25				IS 2062			2		
	17.	PLATE 6X40X1045				IS 2062			0.000		
	16.	PLATE 6X40X1065				IS 2062			1		
	15.	PLATE 6X40X677				IS 2062			0.100		
	14.	WIRE MESH 619X1032 THREAD ø2.5X20X20							8		
	13.	PL.6X40X1042				IS 2062			0.023		
	12.	PL.6X40X629				IS 2062			4		
	11.	TUBE ø21.6X2-45				IS 1239			0.200		
	10.	L50X50X6, 600 LONG				IS 2062			1		
	09.	FLANGE PL.6X25X630				IS 2062			0.250		
	08.	FLANGE PL.6Xø580				IS 2062			1		
	07.	SH-3.15X170X594				IS 1079-ST.34			0.970		
	06.	SH-3.15X66X1561				IS 1079 st 34			4		
	05.	SH-3.15X718X1096				IS 513			2.550		
	04.	SH-3.15X747X1096				IS 513			1		
	03.	SH-3.15X747X1096				IS 513			15.750		
	02.	SH-3.15X609X747				IS 513			1		
	01.	SH-3.15X609X747				IS 513			13.920		
									1		
									13.920		
									1		
									11.250		
									1		
									6.400		
									1		

REV	DATE	ALTERED	
01	30.01.13	CHECKED	

IN ZONE C4 DIMENSION 15 REVISED TO 3.15
NOTE 02 IN ZONE G5 ADDED.
DIMENSION 669 IN ZONE G4 REVISED TO 706.

CAUTION: The information on this document is the property of BHARAT HEAVY ELECTRICALS LTD. It must not be used directly or indirectly in any way detrimental to the interest of the company.

TYPE OF PRODUCT
OR NAME OF
CUSTOMER/PROJECT

BHARAT HEAVY ELECTRICALS LTD.,
UNIT: BOILER AUXILIARIES PLANT.
RANIPET – 632 406.

	NAME	SIGN	DATE	NO.OF VAR.
DRN		-sd-	11.01.01	-
CHD	R.VR	-sd-	12.01.01	
APPD	S.R	-sd-	12.01.01	

DEPT	GRADE OF UNTOL.DIM	SCALE	WEIGHT (KG).	REF. TO ASSY/OLD DRG.	ITEM NO.	NO. OF ITEMS
AQCS		N.T.S	----		-	-
CODE 862	PR:QA:500					

TITLE	CARD CODE	DRAWING NO.	REV
SWITCH BOX VAR-05	U 01	1-00-114-27570	01

Size A1

ALL DIMENSIONS ARE IN MILLIMETRES

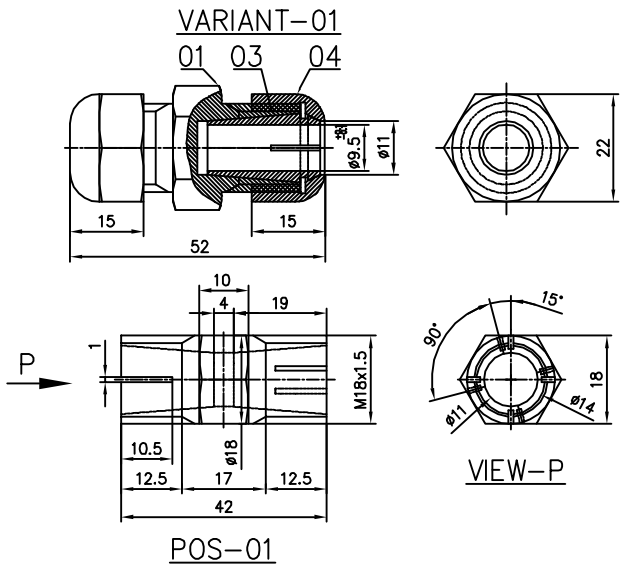

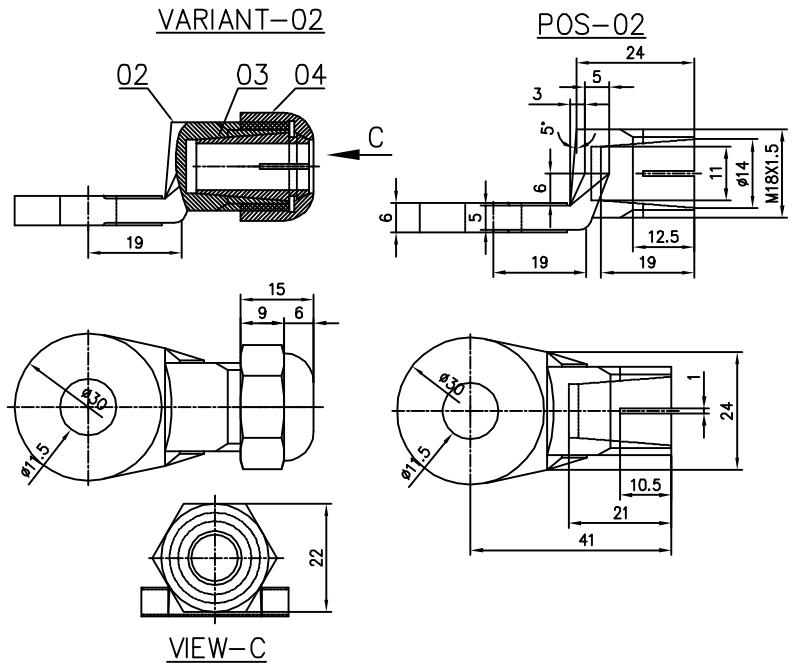

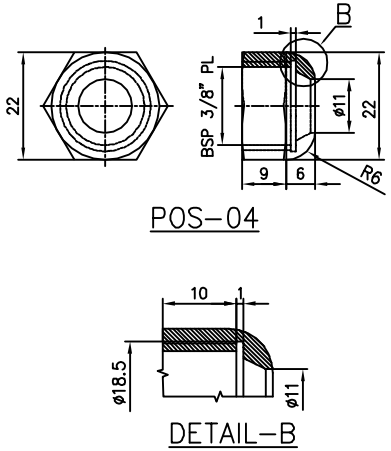

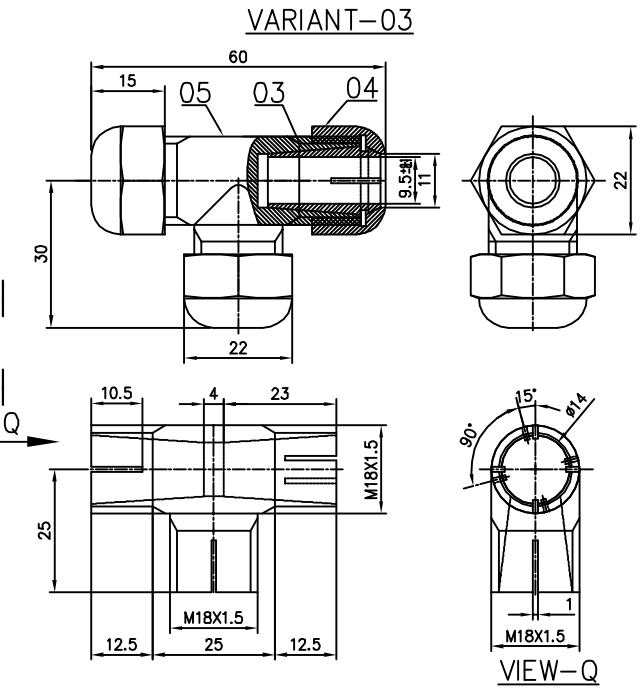

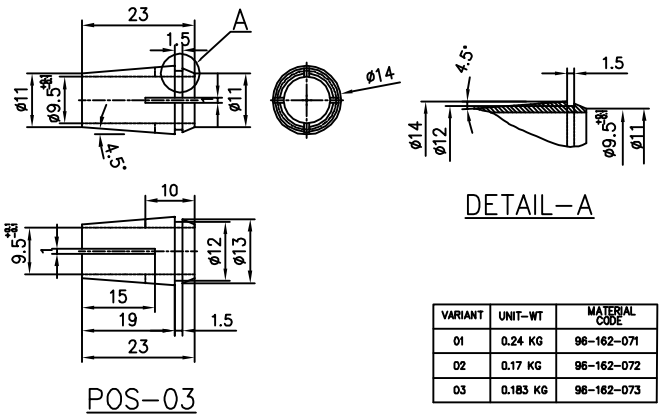

NOTES:-

SURFACE TO BE FINISHED BY NICKEL PLATING OF TH 40 μ.

VARIANT	UNIT-WT	MATERIAL CODE
01	0.24 KG	96-162-071
02	0.17 KG	96-162-072
03	0.183 KG	96-162-073

VARIANT NO	ITEM NO	DESCRIPTION	STD	DRAWING NO.	ITEM NO	MATL. CODE / MATL. SPEC	A / C	DI	UNIT	UNIT WT. / QUANTITY	DI	ZONE
	05	TEE				LEADED BRASS						
	04	ADAPTOR								0.060		
03	03	SLEEVE				AS PER				3		
	04	ADAPTOR								0.020		
	03	SLEEVE				IS 3488-86/				3		
02	02	LUG				BS 2847 CZ 122				0.050		
	04	ADAPTOR								1		
	03	SLEEVE				BS 2847 CZ 122				0.020		
01	01	UNION SCREW				BS 2847 CZ 122				1		
						BS 2847 CZ 122				0.020		
						BS 2847 CZ 122				1		
						BS 2847 CZ 122				0.050		
						BS 2847 CZ 122				2		
						BS 2847 CZ 122				0.020		
						BS 2847 CZ 122				2		
						96 162 071				0.100		
						BS 2847 CZ 122				1		

REV	DATE	ALTERED			REV	DATE	ALTERED			REV	DATE	ALTERED			REV	DATE	ALTERED		
07	10.03.2012	CHECKED	C.Ganesh		06	20.03.1996	CHECKED	S.Rangarajan		05	28.06.1993	CHECKED		-SD-					-SD-
ZONE	Retraced in AutoCAD				ZONE	Nickel plating thickness altered from 40microns to 15 microns				ZONE	SPECIFICATION NUMBER CHANGED								

REV	DATE	ALTERED			REV	DATE	ALTERED			REV	DATE	ALTERED			REV	DATE	ALTERED		
04	08.09.1990	CHECKED		-SD-	03	06.03.1989	CHECKED		-SD-	02	20.09.1984	CHECKED	GM	-SD-	01	08.11.1983	CHECKED	GM	-SD-
ZONE	MATERIAL SPECIFICATION CHANGED				ZONE	VARIANT-03 ADDED CHROMIUM PLATING CHANGED TO NICKEL PLATING				ZONE	POS 01 & 03 INTERNAL PARALLEL BORE CHANGED TO TAPER, M16 THREAD CHANGED TO M18X1.5 AND PROVISION FOR SPANNER HOLD.				ZONE	NOTES CORRECTED			

CAUTION: The information on this drawing is the property of BHARAT HEAVY ELECTRICALS LTD. It must not be used directly or indirectly in any way detrimental to the interest of the company.

TYPE OF PRODUCT OR NAME OF CUSTOMER/PROJECT: ELECTROSTATIC PRECIPITATOR

BHARAT HEAVY ELECTRICALS LTD.
UNIT: BOILER AUXILIARIES PLANT.
RANIPET - 632 406.

	NAME	SIGN	DATE	NO. OF VAR.
DRN	G.M.JAYMAN		08.05.1992	
CHD	G.M		27.12.1992	
APPD	G.S		27.12.1992	

DEPT/AGCS	GRADE OF UNTOL.DIM	SCALE	WEIGHT (KG).	REF. TO ASSY/OLD DRG.	ITEM NO.	NO. OF ITEMS
CODE 862	C / M / F	N.T.S			-	

TITLE: CONNECTING SCREW
VARIANT-01,VARIANT-02 & VARIANT-03

CARD CODE: U 01

DRAWING NO. 1-79-006-00068

REV 07

Size A1

DRAWING NO.

93684374002228BARP9337FMSSCCCC

FIRST ANGLE PROJECTION (ALL DIMENSIONS IN MILLIMETRES)

DRAWING NO 2-79-006-00075/02

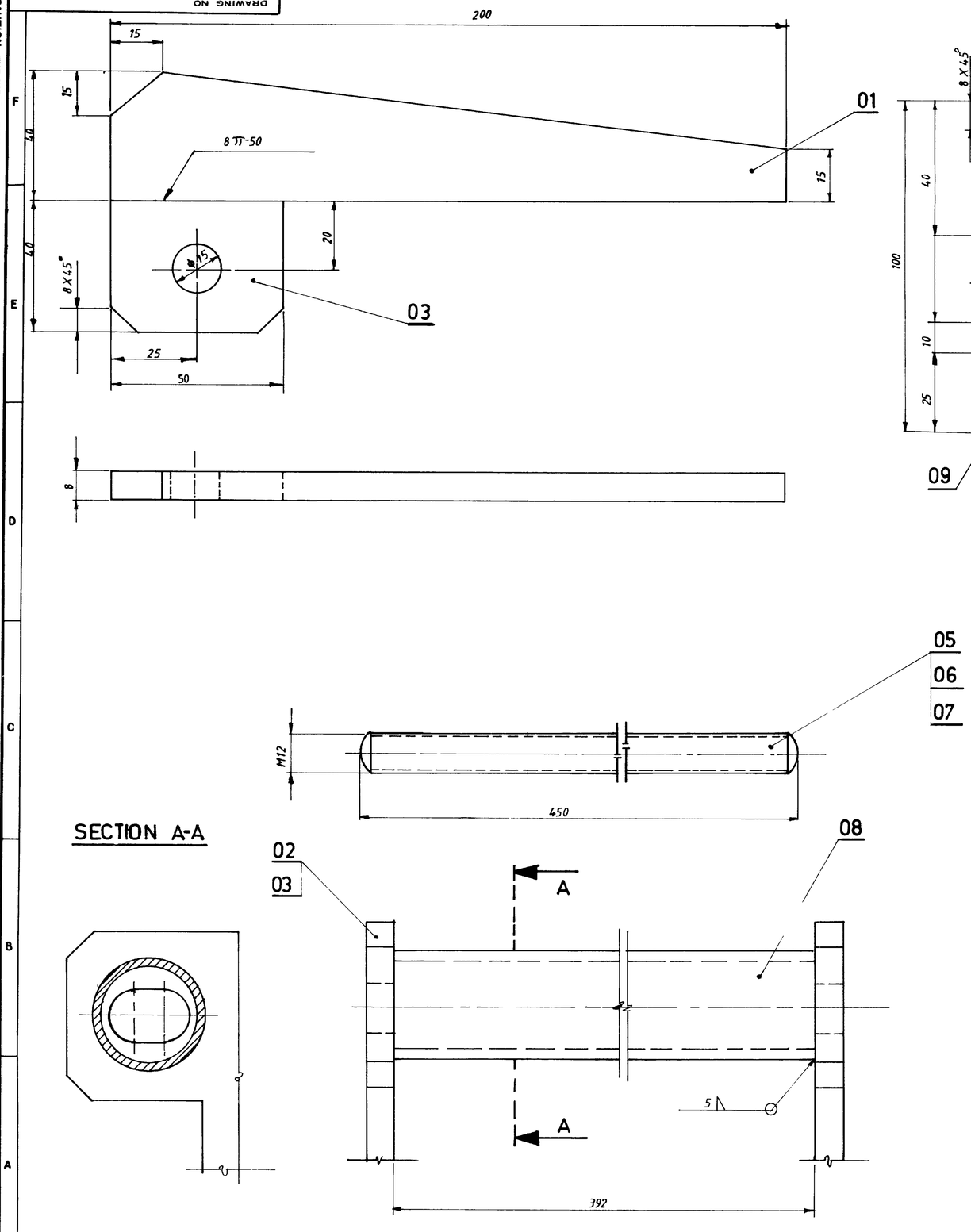

TYPE OF WELD	ELECT SPECN	LENGTH OF WELD
8 TT	E-6013	0,2m
5 ◺	E-6013	0,5m

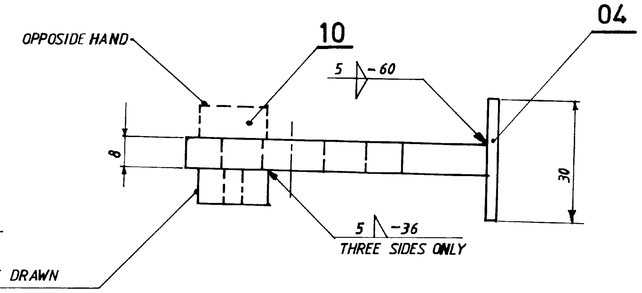

VARIANT NO	ITEM NO.	DESCRIPTION	STD	DRAWING NO	ITEM NO. / VAR NO.	MATL. CODE / MATL SPEC.	A / C	UNIT	UNIT WT. / QTY	GS	ZONE
	10	PLATE 8X12X12				IS-226-			0,01 / 1		
	09	PLATE-8X12X12				IS-226-			0,01 / 1		
	08	TUBE Ø33.7X3, 25-392 LONG				IS-1161- YST 22			0,79 / 1		
	07	NUT-M12				IS 363-B-4			0,017 / 2		
	06	WASHER-M12				IS 2016			0,065 / 2		
	05	ROUND Ø 16 - 450				IS-2062-			0,70 / 1		
	04	PLATE - 5X30X 90				IS 226-			0,1 / 2		
	03	PLATE - 8X 40 X 50				IS-226-			0,13 / 4		
	02	PLATE - 8X60X70				IS-226-			0,26 / 2		
	01	PLATE 8X40X200				IS-226-			0,5 / 2		

REV	DATE	ALTERED / CHECKED
02	20.6.93	ALT. V. Ram / CHD.

IS NUMBER'S YEAR DELETED.
SPECIFICATIONS NUMBER DELETED.

REV	DATE	ALTERED / CHECKED
01		

ZONE

TYPE OF PRODUCT OR NAME OF CUSTOMER/PROJECT: ELECTROSTATIC PRECIPITATOR

Bharat Heavy Electricals Ltd.,
BOILER AUXILIARIES PROJECT
RANIPET 632 406

	NAME	SIGN	DATE	NO. OF VAR
DRN	M BOOPATHY		16.02.85	
CHD	S J P		16 02 85	
APPD	B GOVIDAN		16 02 85	

DEPT	GRADE OF UNTOL DIM	SCALE	WEIGHT (kg)	REF TO ASSY / OLD DRG	ITEM NO.
CODE 862	C/~~MIP~~	1:1	393		

TITLE	CARD CODE	DRAWING NO	REV.
HINGE	U 01	2-79-006-00075	02

RE-TRACED

A2

R: 05-226 C

CAUTION THE INFORMATION ON THIS DOCUMENT IS THE PROPERTY OF BHARAT HEAVY ELECTRICALS LTD. IT MUST NOT BE USED DIRECTLY OR INDIRECTLY IN ANY WAY DETRIMENTAL TO THE INTEREST OF THE COMPANY

FIRST ANGLE PROJECTION (ALL DIMENSIONS IN MILLIMETRES)

DRAWING No. 2-79-006-00148

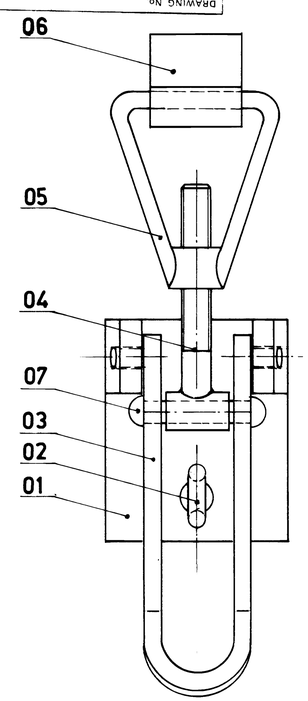

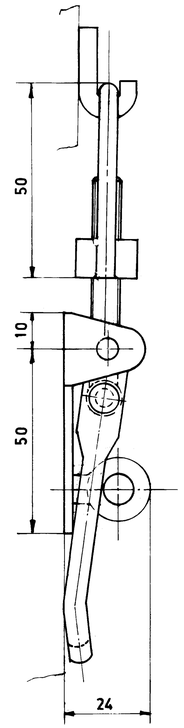

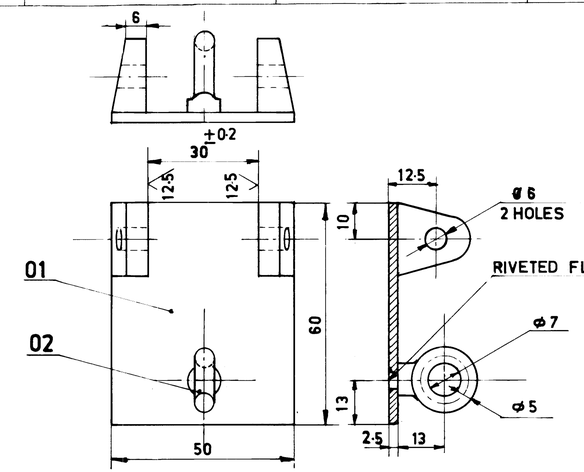

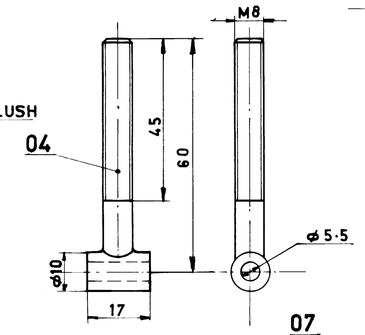

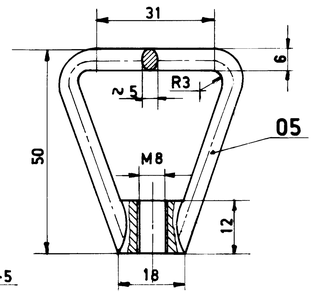

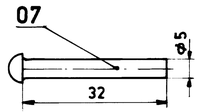

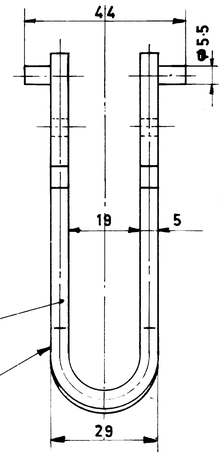

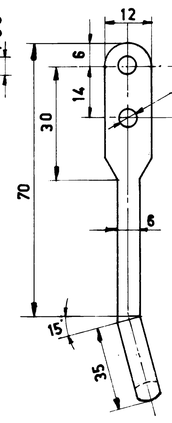

REF : PRQA : 590 FOR PAINTING
REF : PRQA : 500 FOR UNTOL. DIMNS

NOTE:- SUITABLE SURFACE TREATMENT SHALL BE DONE TO PREVENT RUSTING

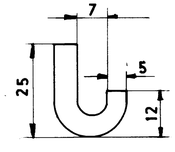

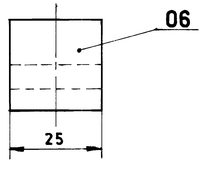

VARIANT NO.	ITEM NO.	DESCRIPTION	STD	DRAWING NO.	ITEM NO. / VAR NO.	MATL CODE / MATL SPEC	A C	UNIT	UNIT WT / QTY	GS	ZONE
	07	RIVET ø5 -32		FORGING		IS 226/62			0.020 / 1		D 2
	06	HOOK		FORGING		IS 226/62			0.030 / 1		A 5
	05	CLAMP		FORGING		IS 226/62			0.030 / 1		E 1
	04	EYE BOLT		FORGING		IS 226/62			0.040 / 1		E 3
	03	LINK ROD 12X5-250		FORGING		IS 226/62			0.12 / 1		D 5
	02	EYE		FORGING		IS 226/62			0.040 / 1		E 5
	01	BRACKET		FORGING		IS1079-63ST 34			0.08 / 1		E 5

TYPE OF PRODUCT OR NAME OF CUSTOMER/PROJECT

Bharat Heavy Electricals Ltd.,
BOILER PLANT UNIT
TIRUCHIRAPALLI-620 014

	NAME	SIGN	DATE
DRN	M. NATRAJ		18.10.81
CHD	S.M.N		
APPD	G.S		20.10.81

NO. OF VAR

REV	DATE	ALTERED / CHECKED
01		

ZONE

DEPT: AQCS
CODE: 250
GRADE OF UNTOL. DIM: -e/M/+
SCALE: 1:1
WEIGHT (kg): 0·38
REF TO ASSY / OLD DRG
ITEM NO.

TITLE: ECCENTRIC LOCK
CARD CODE: U 01
DRAWING NO.: 2-79-006-00148
REV: 00

Size A2

CAUTION
THE INFORMATION ON THIS DOCUMENT IS THE PROPERTY OF BHARAT HEAVY ELECTRICALS LTD. IT MUST NOT BE USED DIRECTLY OR INDIRECTLY IN ANY WAY DETRIMENTAL TO THE INTEREST OF THE COMPANY.

05-228/C

DRAWING NO. 2-79-006-00149

ALL DIMENSIONS ARE IN MILLIMETRES

FOR PRODUCTION
REF. PR:QA:590 FOR PAINTING
REF. PR:QA:500 FOR UNTOL. DIMNS.
REF. APPLICABLE GMS FOR MATCODE&SPEC.

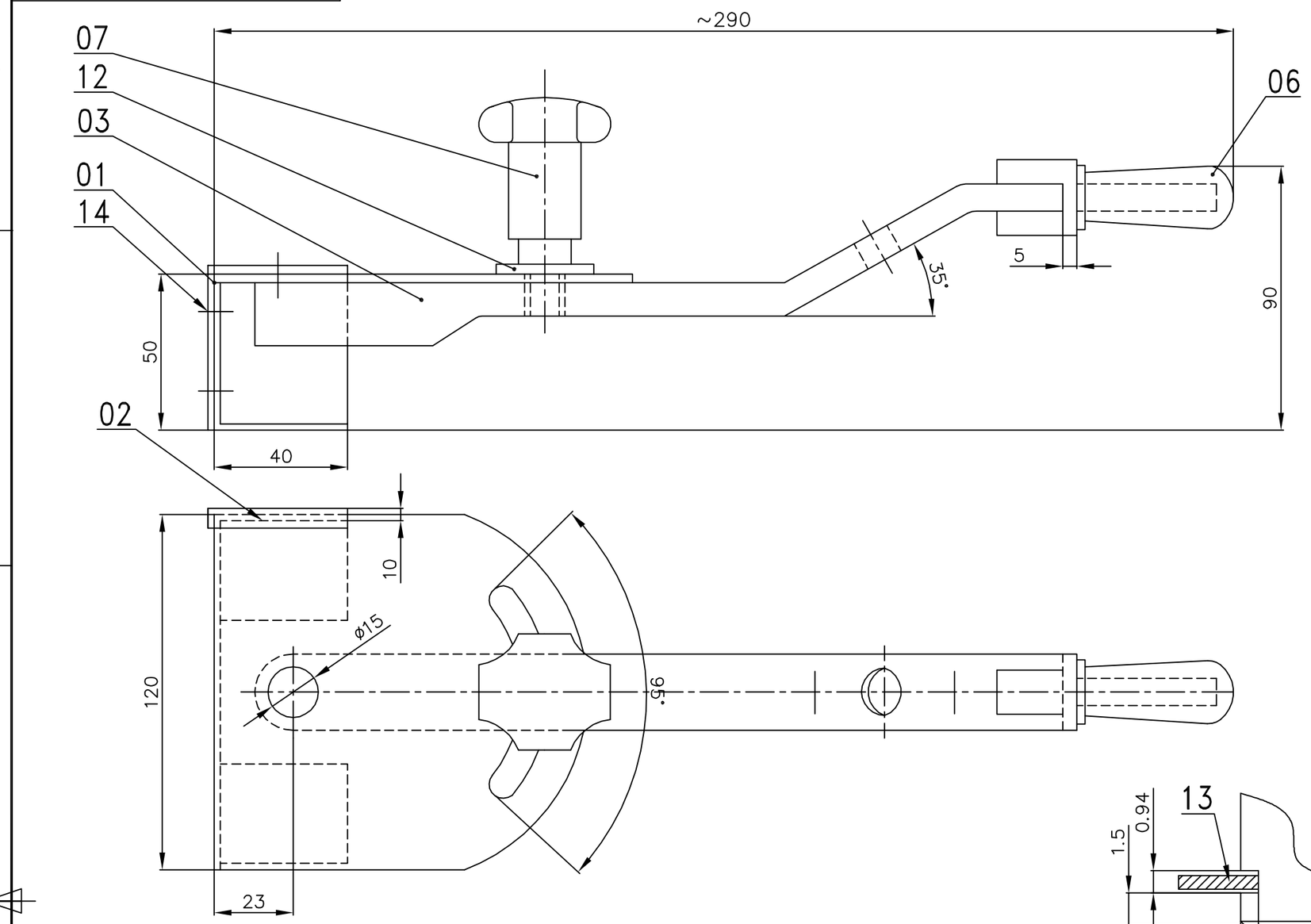

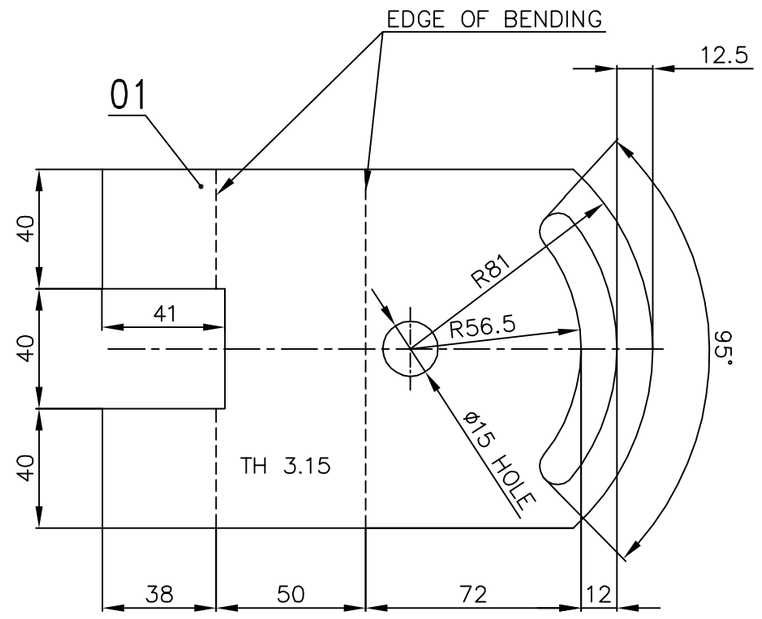

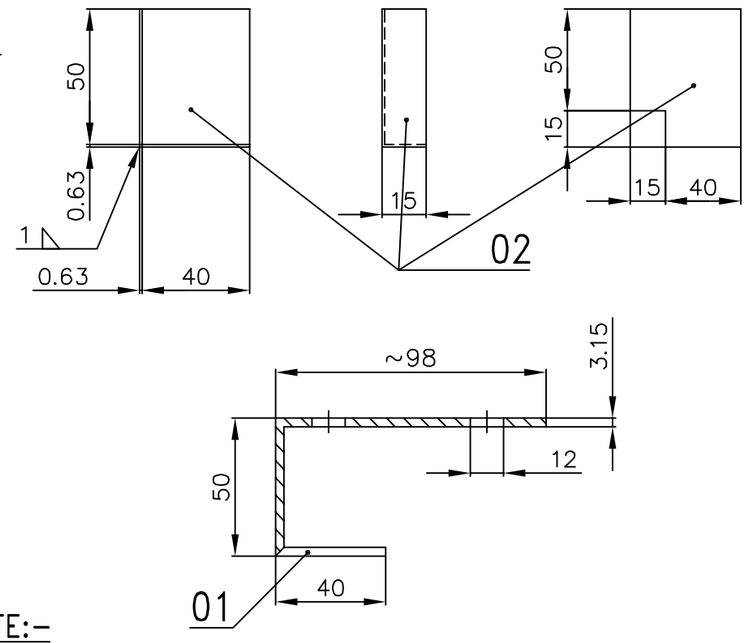

NOTE:-

DRILL HOLE ø15 AFTER SECURING ITEM NOS 08,09,10 AND 11 REMOVE WASHER ITEM NO 11 FOR ASSY TAP THE HOLES FOR ITEM NO 14 IN POSITION.

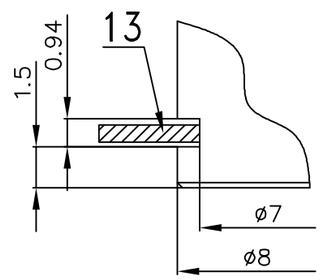

DETAIL-B

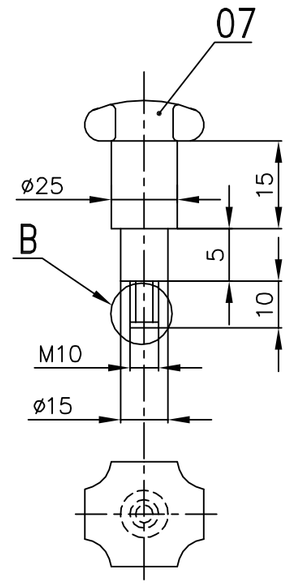

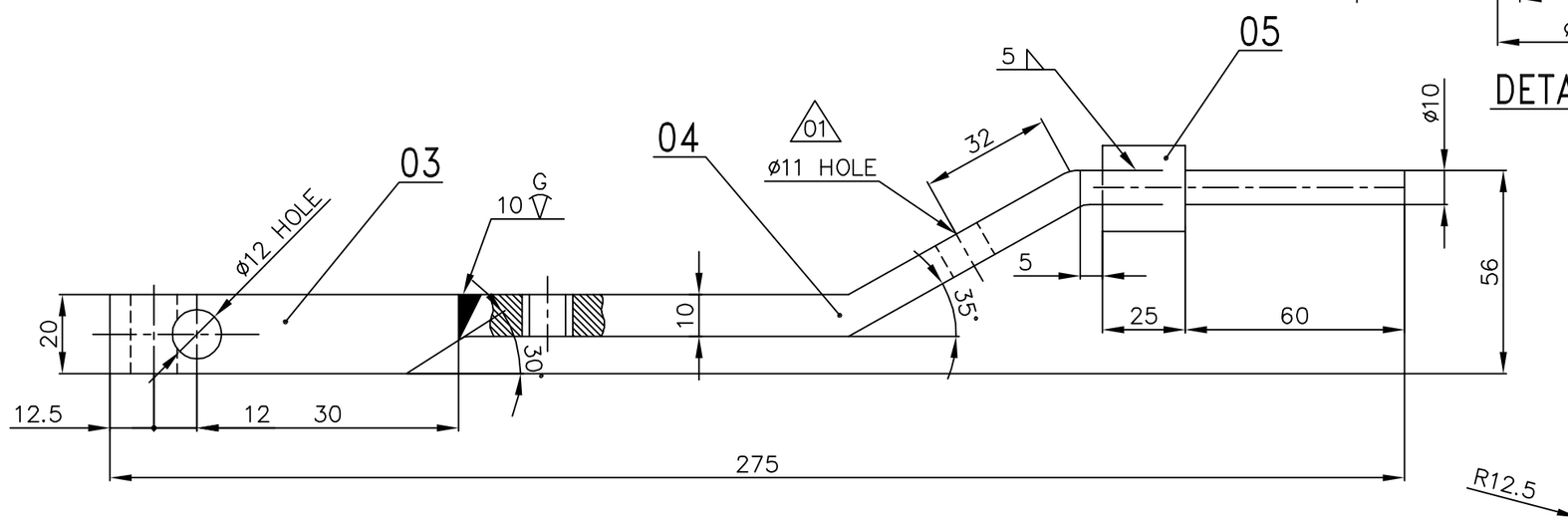

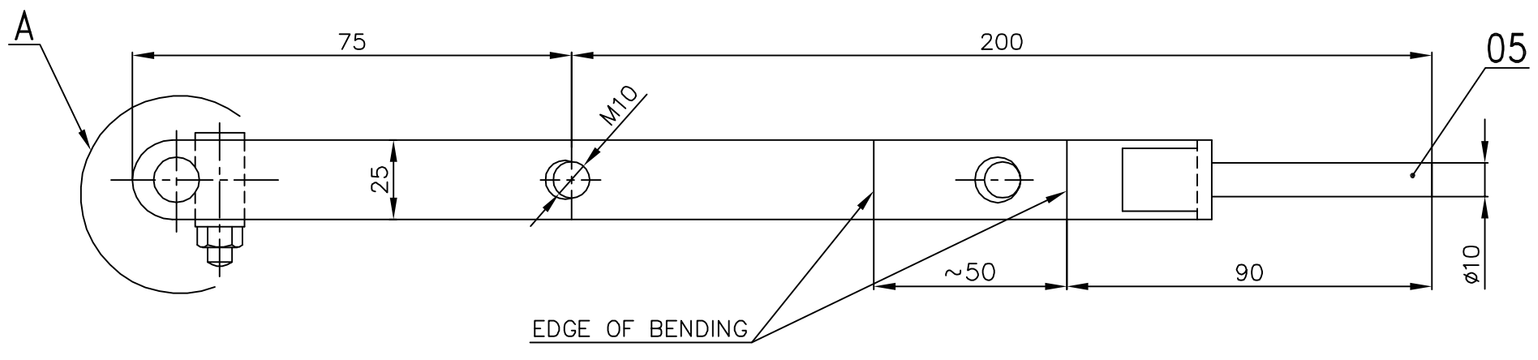

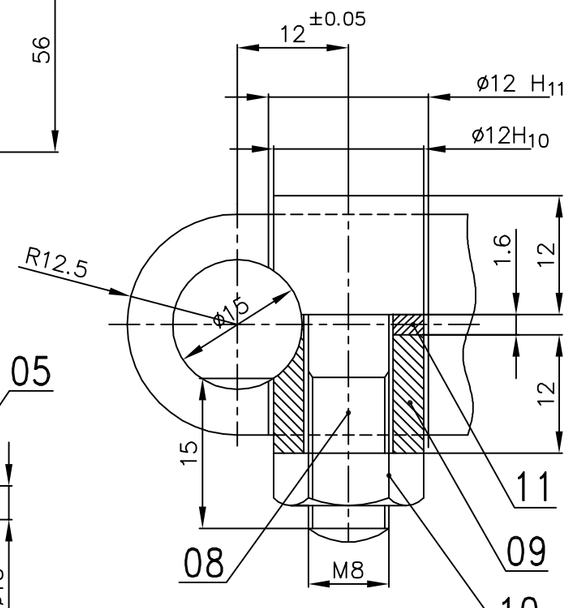

DETAIL-A

VAR NO	ITEM NO	DESCRIPTION	CAT	DRAWING No.	ITEM NO / VAR NO	MATL CODE / MATL SPECN	A/P C	UNIT / DI	UNIT WT / QTY	GS	ZONE
	14	CHEESE HEAD SCREW M3x5				15 1366			0.001 / 3		
	13	CIRCLIP TYPE C NOMINAL SIZE-7				15 3075			0.001 / 1		
	12	WASHER M10				IS 2016			0.004 / 1		
	11	WASHER 1.6xø12/ø8.5				15 513			0.001 / 1		
	10	NUT M8				15 3139			0.005 / 1		
	09	SLEEVE ø12/ø8.5-14				15 226			0.006 / 1		
	08	SCREW M8x23							0.020 / 1		
	07	KNOB-PVC COVERED							0.100 / 1		
	06	RUBBER GRIP SLEEVE							0.050 / 1		
	05	ROUND ø25-85				15 2004 GR III			0.097 / 1		
	04	PL 10x25x150				15 226			0.272 / 1		
	03	PL 20x25x55				15 226			0.216 / 1		
	02	SH 0.63x55x75							0.017 / 1		
	01	SH 3.15x120-184.5				15 513			0.446 / 1		

REV	DATE	ALTERED / CHECKED	ZONE	
03	08.02.13	R.V.R / S.R		ø16 SHOWN IN ZONE D3 REVISED TO ø11
02	29.06.93	-sd- / -sd-		IS NUMBERS YEAR DELETED
01	27.05.92	-sd- / -sd-		DESIGN CHANGED

CAUTION: The information on this document is the property of BHARAT HEAVY ELECTRICALS LTD. It must not be used directly or indirectly in any way detrimental to the interest of the company.

TYPE OF PRODUCT
OR NAME OF
CUSTOMER/PROJECT

RETRACED ON DATE.08.02.2013

BHARAT HEAVY ELECTRICALS LTD.,
UNIT: BOILER AUXILIARIES PLANT,
RANIPET - 632 406.

	NAME	SIGN	DATE	NO.OF VAR.
DRN	M.BOOPATHI	-sd-	14.06.84	
CHD	J.V.RAVIKEERTHI	-sd-		
APPD	S.M.NAIR	-sd-	28.07.84	

DEPT	GRADE OF UNTOL.DIM	SCALE	WEIGHT (KG).	REF. TO ASSY/OLD DRG.	ITEM NO.	NO. OF ITEMS
AQCS		N.T.S	1.238			
CODE	PR: QA: 500					

TITLE: HAND LEVER

CARD CODE: U 01

DRAWING NO. 2-79-006-00149

REV 03

Size A2

ALL DIMENSIONS ARE IN MILLIMETRES

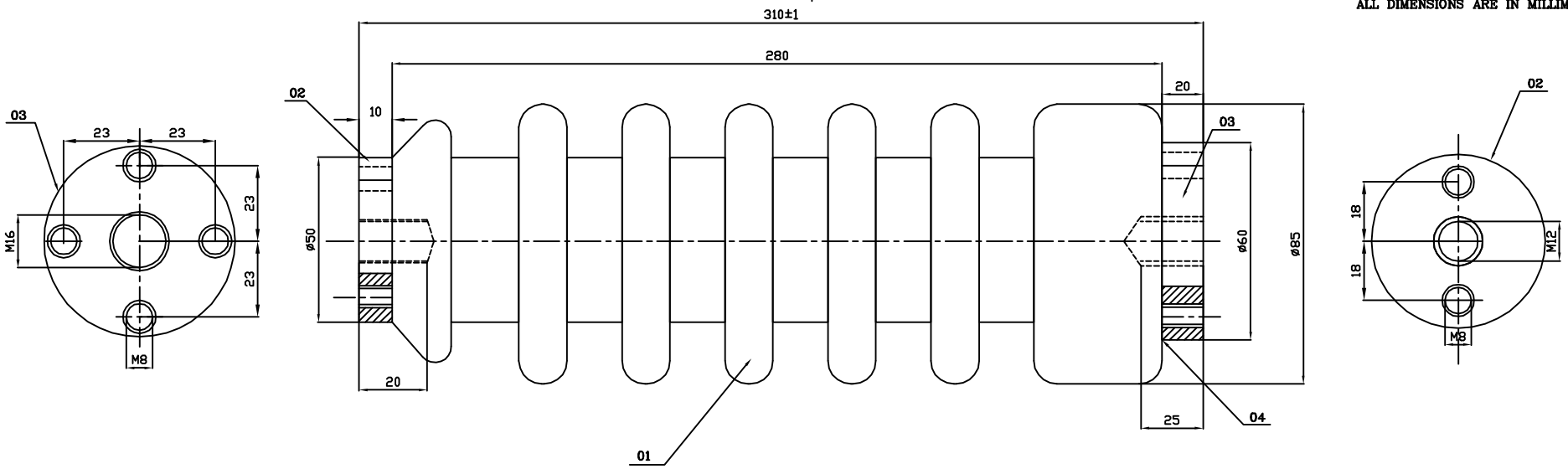

VARIANT NO.	DESCRIPTION	IT. NO.	STD	DRAWING NO.	ITEM / VAR	MATERIAL CODE / MATERIAL SPECN	A/C	COMP GROUP	UNIT WTG (KG) / QUANTITY
04	BINDING MATERIAL					CEMENT MORTOR			
03 (01)	PLATE–20, ø 60					IS 2062			
						IS2062			
02 (03)	PLATE–10, ø 50					IS 2062 (03)			
01	INSULATOR					96–150–132			
						PORCELAIN			

SPECIFICATIONS :

ELECTRICAL TESTING :

1. POWER FREQUENCY DRY WITHSTAND TEST 75KV(RMS) FOR 1 MINUTE. (03)
2. IMPULSE FLASH OVER TEST 150KV(PEAK) (LIGHTNING IMPULSE 1.2/50 µS.) (01)
3. ELECTRICAL TESTS IN ACCORDANCE WITH CLAUSE 3.3 OF IS 5621/1970.

MATERIAL :

4. INSULATION MATERIAL SHOULD BE OF PORCELAIN GLAZED. INSULATOR MUST BE TESTED FOR POROSITY.

NOTE :

THE METAL PARTS SHOULD BE PROVIDED WITH SUITABLE INSERTS FOR PROPER BINDING WITH INSULATOR. (01)

THE METAL PART SHALL ALSO HAVE SUITABLE M16 AND M12 INSERTS FOR EXTERNAL FIXING OF INSULATOR.

REV	DATE	ALTERED / CHECKED	REV	DATE	ALTERED / CHECKED	REV	DATE	ALTERED / CHECKED
03	29.06.93	CHECKED	02	04.05.91	CHECKED	01	09.03.83	CHECKED
		1."IS" YEAR REFERENCE DELETED. 2.KV VALUE FOR ELECTRICAL TESTS ALTERED. 3.IS 226 CHANGED TO IS 2062.			SL NO 5. OF SPECIFICATIONS DELETED			1.ITEM NO ADDED. 2.ELECTRICAL SPECIFICATIONS CORRECTED. 3.NOTE ADDED.

CAUTION: The information on this document is the property of BHARAT HEAVY ELECTRICALS LTD. It must not be used directly or indirectly in any way detrimental to the interest of the company.

TYPE OF PRODUCT OR NAME OF CUSTOMER/PROJECT: REDRAWN

BHARAT HEAVY ELECTRICALS LTD., BOILER PLANT UNIT, TIRUCHIRAPALLI – 620 014

	NAME	SIGN	DATE	NO.OF VAR.
ALTERED	U.JEYANTHI	UJ	25.07.78	
CHECKED	RPS		25.07.78	
APPROVED	S.R		25.07.78	

DEPT AQCS	GRADE OF UNTOL.DIM		SCALE	WEIGHT (KG).	REF. TO ASSY/OLD DRG.	ITEM NO.	NO. OF ITEMS
CODE	PR:QA:500		NTS	5	0–79–006–00002		

TITLE	CARD CODE	DRAWING NO.	REV
PIN INSULATION FOR DISCONNECTING SWITCH	U 01	3–79–006–00100	03

Size A3

FIRST ANGLE PROJECTION (ALL DIMENSIONS IN MILLIMETRES)

08-249/C

REV 01	DATE	ALTERED	REV 02	DATE	ALTERED
		CHECKED			CHECKED

CAUTION THE INFORMATION ON THIS DOCUMENT IS THE PROPERTY OF BHARAT HEAVY ELECTRICALS LTD IT MUST NOT BE USED DIRECTLY OR INDIRECTLY IN ANY WAY DETRIMENTAL TO THE INTEREST OF THE COMPANY

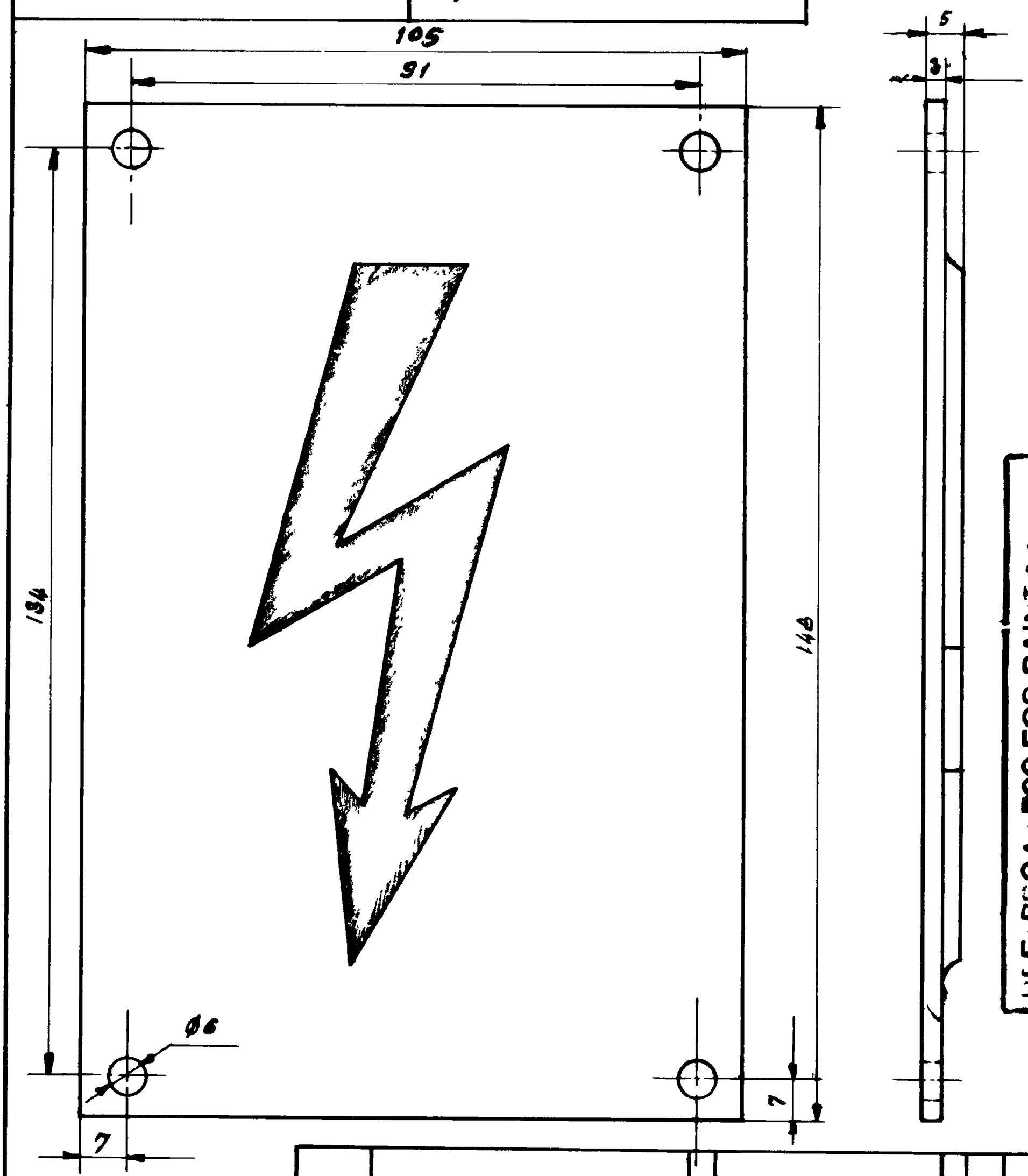

REF: PQA: 590 FOR PAINTING
REF: PSC: 500 FOR UNTOL. DIMNS

NOTE:-
CAST, RED ARROW ON WHITE BACK-GROUND

VARIANT NO.	DESCRIPTION	STD	MATL CODE	A/C	UNIT	UNIT WT
	ALUMINIUM CASTING		MATL SPEC			QTY

MICROFILMED ON 0-249 F 225

Bharat Heavy Electricals Ltd.,
BOILER PLANT UNIT
TIRUCHIRAPALLI-620 014

	NAME	SIGN	DATE
DRN	M. NATRAJ		29-10-81
CHD	SMN		06-11-81
APPD	GS		12-11-81

DEPT.	GRADE OF UNTOL DIM	SCALE	WEIGHT (kg)	REF TO ASSY / OLD DRG	ITEM NO.
ARCS	E/M/F	N.T.S	0.17		
CODE 250					

TITLE	CARD CODE	DRAWING NO	REV
WARNING SIGN	U 01	4-79-006-00267	

Size A4

(To be submitted along with the offer)

SPECIFICATION DEVIATION DISPOSITION REPORT					
Specn			Item		
Enq.No & Date					
Vendor Name					
SPECN					
Page	Clause	Details Of Deviation With Reason		Disposition By BHEL	
Signature Of Vendor				Reviewed By	
"AGREED DEVIATION " if any to be incorporated in the PO in the event of order.				APPROVED BY	

Date: VENDOR's SIGNATURE WITH SEAL

1168598/2022/BAP-9757_RMS_CCC

Ranipet	Standard Quality Plan Disconnecting Switches for ESP Application.	
REF. NO.	REVISION NO.	EFFECTIVE DATE
QP:E :839	00	26 03 2016

TITLE : **Standard Quality Plan Disconnecting Switches for ESP Application. .**

		SIGNATURE
PREPARED BY :	CH ANIL SINGH / ASST.ENGINEER	
REVIEWED :	S SHEELA / SR.ENGINEER	
APPROVED BY :	C SRINIVASAN / DGM	26/03/2016

ISSUED & CONTROLLED BY : *QUALITY ASSURANCE*
BHEL, RANIPET - 632 406.

DOCUMENT STATUS ☐ INFORMATION COPY

☐ CONTROL COPY

✓ It is a control copy only if the mark against the control copy is in other than black colour. Otherwise it will be an uncontrolled copy. Check for current revision.

ISSUED TO:

CONTROL COPY NO :

Ranipet	Standard Quality Plan Disconnecting Switches for ESP Application.	
REF. NO.	REVISION NO.	EFFECTIVE DATE
QP:E :839	00	26 03 2016

RECORD OF REVISION

REV. NO	EFFECTIVE DATE	REMARKS
00	26 03 2016	Original Issue

Ranipet	BHARAT HEAVY ELECTRICALS LTD BOILER AUXILIARIES PLANT, . RANIPET – 632 406. QUALITY ASSURANCE	STANDARD QUALITY PLAN FOR DISCONNECTING SWITCHES FOR ESP APPLICATION.	PROJECT: STANDARD	QP Ref : QP:E:839 REV. NO: 00 DATE: 26 03 2016 Page 3 of 3

Sl. No.	COMPONENT / ASSEMBLY / OPERATION/TESTS		CHARACTE -RISTICS	CLASS	TYPE OF CHECK	QUANTUM OF CHECK		REFERENCE DOCUMENT	ACCEPTANCE STANDARD	FORMAT OF REC		AGENCY			REMARKS
						M	B/ C					M	B	C	
1	2		3	4	5	6		7	8	9	D*	**	10		11
1.0	Review of Raw Material TC for	a)	Chemical Composition	Major	Chemical	Sample	Sample	APPD DRG/PO Spec.	APPD DRG/PO Spec.	TC		P	V	V	
2.0	Visual Inspection	a)	Make	Major	Visual	100%	10%	APPD DRG/PO Spec.	APPD DRG/PO Spec.	-		P	V	V	
		b)	Sl.no	Major	Visual	100%	10%	APPD DRG/PO Spec.	APPD DRG/PO Spec.	-		P	V	V	
		c)	Damage if any on the pin insulator	Major	Visual	100%	10%	APPD DRG/PO Spec.	APPD DRG/PO Spec.	-		P	V	V	
3.0	Dimensional check	a)	Flange dimensions (Rectangular)	Major	Visual	100%	10%	APPD DRG/PO Spec.	APPD DRG/PO Spec.	-		P	W	V	
		b)	PCD	Major	Visual	100%	10%	APPD DRG/PO Spec.	APPD DRG/PO Spec.	-		P	W	V	
		c)	No. of holes	Major	Visual	100%	10%	APPD DRG/PO Spec.	APPD DRG/PO Spec.	-		P	W	V	
		d)	Box over all size (Circular)	Major	Visual	100%	10%	APPD DRG/PO Spec.	APPD DRG/PO Spec.	-		P	W	V	
		e)	Hole size	Major	Visual	100%	10%	APPD DRG/PO Spec.	APPD DRG/PO Spec.	-		P	W	V	
4.0	Operational Features	a)	Operate Disconnecting Switch 10 times observe knife edge , High resilience & restoring of spring action	Major	Testing	100%	10%	APPD DRG/PO Spec.	APPD DRG/PO Spec.	TC		p	W	V	
5.0	IR before & after HV	a)	IR test	Major	Visual	100%	100%	APPD DRG/PO Spec.	IR>10 Mega Ohms	TC		P	W	V	
		b)	HV test (Dielectric Strength)	Major	Elect.	100%	10%	Specification IEC 60060 Part-3/IS 8623-1 1993	HV 2.5 KV for 1 min	TC		P	W	V	
6.0	PIN Insulator	a)	Make	Major	Measure	100%	10%	APPD DRG/Spec..	APPD DRG/Spec.	TC/TR		P	V	V	Pin Insulator from BHELEPD.CJI, WS industries/UCE
		b)	Dimensional check	Major	Measure	100%	10%	APPD DRG/Spec..	APPD DRG/Spec..	TC/TR		P	V	V	
		c)	Review of TC /TR	Major	Mech	Sample	Sample	IS 4318 1993	IS 4318 1993	TC/TR		V	V	-	
7.0	Type test reports	a)	Dry power frequency test	Major	Elect.	Sample	Sample	IS 9921(Part II)	IS 9921(Part II)	TC/TR		P	V	V	
		b)	Lightning Impulse test	Major	Elect.	Sample	Sample	IS 9921(Part II)	IS 9921(Part II)	TC/TR		P	V	V	
		c)	IP 55	Major	Elect.	Sample	Sample	IS 13947	IS 13947	TC/TR		P	V	V	
8.0	Painting & Packing	a)	Visual	Major	Visual	100%	100%	APPD DRG/PO Spec.	APPD DRG/PO Spec	Log Book/IR		P	W	V	

LEGEND: * RECORDS IDENTIFIED WITH "TICK" SHALL BE ESSENTIALLY INCLUDED BY SUPPLIER IN QA DOCUMENTATION. ** M: MANUFACTURER /SUB-SUPPLIER, C: SUPPLIER/NAMINATED INSPECTION AGENCY, N: NTPC, P: PERFORM, W: WITNESS AND V: VERIFICATION APPROPRIATE CHP: NTPC SHALL IDENTIFY IN COLUMN "N' AS"W" APPD DRG – APPROVED DATA SHEET, SPEC. – NTPC SPECIFICATION, TC - TEST CERTIFICATE, COC – CERTIFICATE OF COMPLAINCE CC – CALIBRATION CERTIFICATE, PO Spec. – Purchase Order Specification. TR=Test reports. IR=Internal Inspection Reports

Sl. NO.	DESCRIPTION	BHEL Requirements	##Specific confirmations by the vendor
		ITEM: DISCONNECTING SWITCH	
01	**Type Test Requirements**	1. The vendor shall carryout the following type tests in the presence of BHEL for which 15 days' advance notice is to be given to BHEL/Ranipet. The **Type Test Procedure** covering test setup, instruments to be used, acceptance norms, different test parameters and precautions to be taken for these type tests are to be submitted for BHEL review and approval at the time of offer itself to prove their design capability . ✓ Dry Power Frequency Test for one minute at 95KV (RMS) if 400MM electrode spacing ESP field. ✓ Lightning Impulse Test 250KV (Peak negative) with 1.2/50Micro second wave if 400MM electrode spacing ESP field	
		2. Incase the vendor has already conducted such specified type test with in last Five Years from the date of enquiry, they may submit all the type test reports for the BHEL review. The report should be for the test conducted on the similar design of the Disconnecting Switch as proposed in this enquiry. In addition, vendor should certify that "No design change". These type tests should have been carried out at independent lab and witnessed by BHEL. However, BHEL reserves the right to accept or reject the reports. If reports are accepted by BHEL, vendor need not repeat the type test other wise all these tests are to conducted at free of cost within reasonable time.	
		3. BHEL if insisting for repetitions of type tests, then type test charges will be paid additionally. **The type test charges being indicated by the vendor will be taken to arrive total cost and included for comparative statements. Accordingly, vendor shall indicate type test charges separately in the offer.**	
		4. **The type test charges being indicated by the vendor will be released only after o**btaining clearance from BHEL for type tests reports and BHEL treats this as repetitions of type test.	
02	**Quality Plan Requirement**	BHEL Standard Quality Plan:QP:E:839 Rev 00 (Copy Attached) to be followed for inspection.	
03	**Pin Insulator used in Disconnecting Switch**	Pin Insulator shall be from ✓ M/S WSI ✓ M/S BHEL ✓ M/S JSI ✓ M/S UCE ✓ M/S ADITYA BIRLA	

Sl. NO.	DESCRIPTION	BHEL Requirements	##Specific confirmations by the vendor

ITEM: DISCONNECTING SWITCH

04	**Painting Requirements**	Painting requirement like paint shade and painting thickness including no of coats if any are to be ensured by Disconnecting Switch supplier for these Disconnecting Switch as per BHEL approved data sheet/drg /specification (As applicable).	
		Vendor shall confirm to ###surface preparations as follows:- **###SURFACE PREPARTIONS** : 7 TANK PROCESS AS PER IS 6005 **PRIMER** : RED OXIDE PRIMER **FINISH PAINT** : EPOXY PAINT POWDER COATING	
05	**Packing**	Required Packing & preservation shall also to be ensured as per requirements stipulated in Engg spec / drg / data sheet/PO condition to avoid any damage during transit., handling damages & storage at site.	
06	**Inspection**	1.BHEL or BHEL AIA Inspection is must before dispatch as per BHEL approved SQP and approved Data sheet/drg/scheme (As applicable) 2.No material shall be dispatched without BHEL/BHEL authorized inspection agency inspection 3. To raise inspection call by BHEL/BHEL AIA inspection including for type test witnessing , vendor is requested to contact Mr M.S.Aditya Chakravathi., Manager (QC-Proc)., Mobile no: +91 9489202788., Email id: msachakravarthy@bhel.in and Mr Zeeshan Ali., DM (QC-Proc)., Mobile no: +91 9443149691., Email id: zeeshan@bhel.in for inspection related activities for immediate response / resolution	

##Supplier signature with seal

Necessarily to be filled up by the vendor at the time of offer itself otherwise their offer may not be considered w.r.t Quality Requirements being customer specific requirements.

Ranipet	Standard Quality Plan Disconnecting Switches for ESP Application.	
REF. NO.	REVISION NO.	EFFECTIVE DATE
QP:E :839	00	26 03 2016

TITLE : **Standard Quality Plan Disconnecting Switches for ESP Application. .**

		SIGNATURE
PREPARED BY :	CH ANIL SINGH / ASST.ENGINEER	
REVIEWED :	S SHEELA / SR.ENGINEER	
APPROVED BY :	C SRINIVASAN / DGM	26/03/2016

ISSUED & CONTROLLED BY : *QUALITY ASSURANCE*
BHEL, RANIPET - 632 406.

DOCUMENT STATUS ☐ INFORMATION COPY

☐ CONTROL COPY

✓ It is a control copy only if the mark against the control copy is in other than black colour. Otherwise it will be an uncontrolled copy. Check for current revision.

ISSUED TO:	CONTROL COPY NO :

Ranipet	Standard Quality Plan Disconnecting Switches for ESP Application.	
REF. NO.	REVISION NO.	EFFECTIVE DATE
QP:E :839	00	26 03 2016

RECORD OF REVISION

REV. NO	EFFECTIVE DATE	REMARKS
00	26 03 2016	Original Issue

Ranipet	BHARAT HEAVY ELECTRICALS LTD BOILER AUXILIARIES PLANT, . RANIPET – 632 406. QUALITY ASSURANCE	STANDARD QUALITY PLAN FOR DISCONNECTING SWITCHES FOR ESP APPLICATION.	PROJECT: STANDARD	QP Ref : QP:E:839 REV. NO: 00 DATE: 26 03 2016 Page 3 of 3

Sl. No.	COMPONENT / ASSEMBLY / OPERATION/TESTS		CHARACTE -RISTICS	CLASS	TYPE OF CHECK	QUANTUM OF CHECK		REFERENCE DOCUMENT	ACCEPTANCE STANDARD	FORMAT OF REC		AGENCY			REMARKS
						M	B/ C					M	B	C	
1	2		3	4	5	6		7	8	9	D*	**	10		11
1.0	Review of Raw Material TC for	a)	Chemical Composition	Major	Chemical	Sample	Sample	APPD DRG/PO Spec.	APPD DRG/PO Spec.	TC		P	V	V	
2.0	Visual Inspection	a)	Make	Major	Visual	100%	10%	APPD DRG/PO Spec.	APPD DRG/PO Spec.	-		P	V	V	
		b)	Sl.no	Major	Visual	100%	10%	APPD DRG/PO Spec.	APPD DRG/PO Spec.	-		P	V	V	
		c)	Damage if any on the pin insulator	Major	Visual	100%	10%	APPD DRG/PO Spec.	APPD DRG/PO Spec.	-		P	V	V	
3.0	Dimensional check	a)	Flange dimensions (Rectangular)	Major	Visual	100%	10%	APPD DRG/PO Spec.	APPD DRG/PO Spec.	-		P	W	V	
		b)	PCD	Major	Visual	100%	10%	APPD DRG/PO Spec.	APPD DRG/PO Spec.	-		P	W	V	
		c)	No. of holes	Major	Visual	100%	10%	APPD DRG/PO Spec.	APPD DRG/PO Spec.	-		P	W	V	
		d)	Box over all size (Circular)	Major	Visual	100%	10%	APPD DRG/PO Spec.	APPD DRG/PO Spec.	-		P	W	V	
		e)	Hole size	Major	Visual	100%	10%	APPD DRG/PO Spec.	APPD DRG/PO Spec.	-		P	W	V	
4.0	Operational Features	a)	Operate Disconnecting Switch 10 times observe knife edge , High resilience & restoring of spring action	Major	Testing	100%	10%	APPD DRG/PO Spec.	APPD DRG/PO Spec.	TC		p	W	V	
5.0	IR before & after HV	a)	IR test	Major	Visual	100%	100%	APPD DRG/PO Spec.	IR>10 Mega Ohms	TC		P	W	V	
		b)	HV test (Dielectric Strength)	Major	Elect.	100%	10%	Specification IEC 60060 Part-3/IS 8623-1 1993	HV 2.5 KV for 1 min	TC		P	W	V	
6.0	PIN Insulator	a)	Make	Major	Measure	100%	10%	APPD DRG/Spec..	APPD DRG/Spec.	TC/TR		P	V	V	Pin Insulator from BHELEPD.CJI, WS industries/UCE
		b)	Dimensional check	Major	Measure	100%	10%	APPD DRG/Spec..	APPD DRG/Spec..	TC/TR		P	V	V	
		c)	Review of TC /TR	Major	Mech	Sample	Sample	IS 4318 1993	IS 4318 1993	TC/TR		V	V	-	
7.0	Type test reports	a)	Dry power frequency test	Major	Elect.	Sample	Sample	IS 9921(Part II)	IS 9921(Part II)	TC/TR		P	V	V	
		b)	Lightning Impulse test	Major	Elect.	Sample	Sample	IS 9921(Part II)	IS 9921(Part II)	TC/TR		P	V	V	
		c)	IP 55	Major	Elect.	Sample	Sample	IS 13947	IS 13947	TC/TR		P	V	V	
8.0	Painting & Packing	a)	Visual	Major	Visual	100%	100%	APPD DRG/PO Spec.	APPD DRG/PO Spec.	Log Book/IR		P	W	V	

LEGEND: * RECORDS IDENTIFIED WITH "TICK" SHALL BE ESSENTIALLY INCLUDED BY SUPPLIER IN QA DOCUMENTATION. ** M: MANUFACTURER /SUB-SUPPLIER, C: SUPPLIER/NAMINATED INSPECTION AGENCY, N: NTPC, P: PERFORM, W: WITNESS AND V: VERIFICATION APPROPRIATE CHP: NTPC SHALL IDENTIFY IN COLUMN "N' AS"W" APPD DRG – APPROVED DATA SHEET, SPEC. – NTPC SPECIFICATION, TC - TEST CERTIFICATE, COC – CERTIFICATE OF COMPLAINCE CC – CALIBRATION CERTIFICATE, PO Spec. – Purchase Order Specification. TR=Test reports. IR=Internal Inspection Reports

Annexure-1

INTEGRITY PACT

Between

Bharat Heavy Electricals Ltd. (BHEL), a company registered under the Companies Act 1956 and having its registered office at "BHEL House", Siri Fort, New Delhi - 110049 (India) hereinafter referred to as "The Principal", which expression unless repugnant to the context or meaning hereof shall include its successors or assigns of the ONE PART

and

_____, (description of the party along with address), hereinafter referred to as "The Bidder/ Contractor" which expression unless repugnant to the context or meaning hereof shall include its successors or assigns of the OTHER PART

Preamble

The Principal intends to award, under laid-down organizational procedures, contract/s for _____

_____
_____ (hereinafter referred to as "Contract"). The Principal values full compliance with all relevant laws of the land, rules and regulations, and the principles of economic use of resources, and of fairness and transparency in its relations with its Bidder(s)/ Contractor(s).

In order to achieve these goals, the Principal will appoint panel of Independent External Monitor(s) (IEMs), who will monitor the tender process and the execution of the contract for compliance with the principles mentioned above.

Section 1- Commitments of the Principal

1.1 The Principal commits itself to take all measures necessary to prevent corruption and to observe the following principles: -

1.1.1 No employee of the Principal, personally or through family members, will in connection with the tender for, or the execution of a contract, demand, take a promise for or accept, for self or third person, any material or immaterial benefit which the person is not legally entitled to.

1.1.2 The Principal will, during the tender process treat all Bidder(s) with equity and reason. The Principal will in particular, before and during the tender process, provide to all Bidder(s) the same information and will not provide to any Bidder(s) confidential/ additional information through which the Bidder(s) could obtain an advantage in relation to the tender process or the contract execution.

1.1.3 The Principal will exclude from the process all known prejudiced persons.

1.2 If the Principal obtains information on the conduct of any of its employees which is a penal offence under the Indian Penal Code 1860 and Prevention of Corruption Act 1988 or any other statutory penal enactment, or if there be a substantive suspicion in this regard, the Principal will inform its Vigilance Office and in addition can initiate disciplinary actions.

Section 2 - Commitments of the Bidder(s)/ Contractor(s)

2.1 The Bidder(s)/ Contractor(s) commit himself to take all measures necessary to prevent corruption. The Bidder(s)/ Contractor(s) commits himself to observe the following principles during participation in the tender process and during the contract execution.

2.1.1 The Bidder(s)/ Contractor(s) will not, directly or through any other person or firm, offer, promise or give to the Principal or to any of the Principal's employees involved in the tender process or the execution of the contract or to any third person any material, immaterial or any other benefit which he/ she is not legally entitled to, in order to obtain in exchange any advantage of any kind whatsoever during the tender process or during the execution of the contract.

2.1.2 The Bidder(s)/ Contractor(s) will not enter with other Bidder(s) into any illegal or undisclosed agreement or understanding, whether formal or informal. This applies in particular to prices, specifications, certifications, subsidiary contracts, submission or non-submission of bids or any other actions to restrict competitiveness or to introduce cartelization in the bidding process.

2.1.3 The Bidder(s)/ Contractor(s) will not commit any penal offence under the relevant Indian Penal Code (IPC) and Prevention of Corruption Act; further the Bidder(s)/ Contractor(s) will not use improperly, for purposes of competition or personal gain, or pass on to others, any information or document provided by the Principal as part of the business relationship, regarding plans, technical proposals and business details, including information contained or transmitted electronically.

2.1.4 Foreign Bidder(s)/ Contractor(s) shall disclose the name and address of agents and representatives in India and Indian Bidder(s)/ Contractor(s) to disclose their foreign principals or associates. The Bidder(s)/ Contractor(s) will, when presenting his bid, disclose any and all payments he has made, and is committed to or intends to make to agents, brokers or any other intermediaries in connection with the award of the contract.

2.2 The Bidder(s)/ Contractor(s) will not instigate third persons to commit offences outlined above or be an accessory to such offences.

2.3 The Bidder(s)/ Contractor(s) shall not approach the Courts while representing the matters to IEMs and shall await their decision in the matter.

Section 3 - Disqualification from tender process and exclusion from future contracts

If the Bidder(s)/ Contractor(s), before award or during execution has committed a transgression through a violation of Section 2 above, or acts in any other manner such as to put his reliability or credibility in question, the Principal is entitled to disqualify the Bidder(s)/ Contractor(s) from the tender process , terminate the contract, if already awarded, exclude from future business dealings and/ or take action as per the separate "Guidelines on Banning of Business dealings with Suppliers/ Contractors", framed by the Principal.

Section 4 - **Compensation for Damages**

4.1 If the Principal has disqualified the Bidder (s) from the tender process before award / order acceptance according to Section 3, the Principal is entitled to demand and recover the damages equivalent to Earnest Money Deposit/ Bid Security.

4.2 If the Principal is entitled to terminate the Contract according to Section 3, or terminates the Contract in application of Section 3 above , the Bidder(s)/ Cotractor (s) transgression through a violation of Section 2 above shall be construed breach of contract and the Principal shall be-entitled to demand and recover from the Contractor an amount equal to 5% of the contract value or the amount equivalent to Security Deposit/ Performance Bank Guarantee , whichever is higher, as damages, in addition to and without prejudice to its right to demand and recover compensation for any other loss or damages specified elsewhere in the contract.

Section 5 - Previous Transgression

5.1 The Bidder declares that no previous transgressions occurred in the last 3 (three) years with any other company in any country conforming to the anti-corruption approach or with any other Public Sector Enterprise in India that could justify his exclusion from the tender process.

5.2 If the Bidder makes incorrect statement on this subject, he can be disqualified from the tender process or the contract, if already awarded, can be terminated for such reason or action can be taken as per the separate "Guidelines on Banning of Business dealings with Suppliers/ Contractors", framed by the Principal.

Section 6 - Equal treatment of all Bidder (s)/ Contractor (s) / Sub-contractor (s)

6.1 The Principal will enter into Integrity Pacts with identical conditions as this Integrity Pact with all Bidders and Contractors.

6.2 In case of Sub-contracting, the Principal Contractor shall take the responsibility of the adoption of Integrity Pact by the Sub-contractor(s) and ensure that all Sub-contractors also sign the Integrity Pact.

6.3 The Principal will disqualify from the tender process all Bidders who do not sign this Integrity Pact or violate its provisions.

Section 7 - Criminal Charges against violating Bidders/ Contractors /Subcontractors

If the Principal obtains knowledge of conduct of a Bidder, Contractor or Subcontractor, or of an employee or a representative or an associate of a Bidder, Contractor or Subcontractor which constitutes corruption, or if the Principal has substantive suspicion in this regard, the Principal will inform the Vigilance Office.

Section 8 -Independent External Monitor(s)

8.1 The Principal appoints competent and credible panel of Independent External Monitor (s) (IEMs) for this Integrity Pact. The task of the IEMs is to review independently and objectively, whether and to what extent the parties comply with the obligations under this Integrity Pact.

8.2 The IEMs are not subject to instructions by the representatives of the parties and performs his functions neutrally and independently. He reports to the CMD, BHEL.

8.3 The IEMs shall be provided access to all documents/ records pertaining to the Contract, for which a complaint or issue is raised before them as and when warranted. However, the documents/records/information having National Security implications and those documents which have been classified as Secret/Top Secret are not to be disclosed.

8.4 The Principal will provide to the IEMs sufficient information about all meetings among the parties related to the Contract provided such meetings could have an impact on the contractual relations between the Principal and the Contractor. The parties offer to the IEMs the option to participate in such meetings.

8.5 The advisory role of IEMs is envisaged as that of a friend, philosopher and guide. The advice of IEMs would not be legally binding and it is restricted to resolving issues raised by a Bidder regarding any aspect of the tender which allegedly restricts competition or bias towards some Bidders. At the same time, it must be understood that IEMs are not consultants to the Management. Their role is independent in nature and the advice once tendered would not be subject to review at the request of the organization.

8.6 For ensuring the desired transparency and objectivity in dealing with the complaints arising out of any tendering process or during execution of Contract, the matter should be examined by the full panel of IEMs jointly, who would look into the records, conduct an investigation, and submit their joint recommendations to the Management.

8.7 The IEMs would examine all complaints received by them and give their recommendations/ views to the CMD, BHEL at the earliest. They may also send their report directly to the CVO, in case of suspicion of serious irregularities requiring legal/ administrative action. Only in case of very serious issue having a specific, verifiable Vigilance angle, the matter should be reported directly to the Commission. IEMs will tender their advice on the complaints within 30 days.

8.8 The CMD, BHEL shall decide the compensation to be paid to the IEMs and its terms and conditions.

8.9 IEMs should examine the process integrity, they are not expected to concern themselves with fixing of responsibility of officers. Complaints alleging mala fide on the part of any officer of the Prinicpal should be looked into by the CVO of the Principal.

8.10 If the IEMs have reported to the CMD, BHEL, a substantiated suspicion of an offence under relevant Indian Penal Code / Prevention of Corruption Act, and the CMD, BHEL has not, within reasonable time, taken visible action to proceed against such offence or reported it to the Vigilance Office, the IEMs may also transmit this information directly to the Central Vigilance Commissioner, Government of India.

8.11 After award of work, the IEMs shall look into any issue relating to execution of Contract, if specifically raised before them. As an illustrative example, if a Contractor who has been awarded the Contract, during the execution of Contract, raises issue of delayed payment etc. before the IEMs, the same shall be examined by the panel of IEMs. Issues like warranty/ guarantee etc. shall be outside the purview of IEMs.

8.12 However, the IEMs may suggest systemic improvements to the management of the Principal, if considered necessary, to bring about transparency, equity and fairness in the system of procurement.

8.13 The word `Monitor' would include both singular and plural.

Section 9 - Pact Duration

9.1 This Integrity Pact shall be operative from the date this Integrity Pact is signed by both the parties till the final completion of contract for successful Bidder, and for all other Bidders 6 months after the Contract has been awarded. Any violation of the same would entail disqualification of the bidders and exclusion from future business dealings.

9.2 If any claim is made/ lodged during currency of this Integrity Pact, the same shall be binding and continue to be valid despite the lapse of this Pact as specified above, unless it is discharged/ determined by the CMD, BHEL.

Section 10 - Other Provisions

10.1 This Integrity Pact is subject to Indian Laws and exclusive jurisdiction shall be of the competent Courts as indicated in the Tender or Contract, as the case may be.

10.2 Changes and supplements as well as termination notices need to be made in writing.

10.3 If the Bidder(s)/ Contractor(s) is a partnership or a consortium or a joint venture, this Integrity Pact shall be signed by all partners of the partnership or joint venture or all consortium members.

10.4 Should one or several provisions of this Integrity Pact turn out to be invalid, the remainder of this Integrity Pact remains valid. In this case, the parties will strive to come to an agreement to their original intentions.

10.5 Only those bidders / contractors who have entered into this Integrity Pact with the Principal would be competent to participate in the bidding. In other words, entering into this Integrity Pact would be a preliminary qualification.

10.6 In the event of any dispute between the Principal and Bidder(s)/ Contractor(s) relating to the Contract, in case, both the parties are agreeable, they may try to settle dispute through Mediation before the panel of IEMs in a time bound manner. In case, the dispute remains unresolved even after mediation by the panel of IEMs, either party may take further action as the terms & conditions of the Contract. The fees/expenses on dispute resolution through mediation shall be shared by both the parties. Further, the mediation proceedings shall be confidential in nature and the parties shall keep confidential all matters relating to the mediation proceedings including any settlement agreement arrived at between the parties as outcome of mediation. Any views expressed, suggestions, admissions or proposals etc. made by either party in the course of mediation shall not be relied upon or introduced as evidence in any further arbitral or judicial proceedings, whether or not such proceedings relate to the dispute that is the subject of mediation proceedings. Neither of the parties shall present IEMs as witness in any Alternative Dispute Resolution or judicial proceedings in respect of the dispute that was subject of mediation.

---	---
For & On behalf of the Principal (Office Seal)	For & On behalf of the Bidder/ Contractor (Office Seal)
Place _____ Date _____	
Witness:_____ (Name & Address) _____ _____	Witness:_____ (Name & Address) _____ _____

***(To be submitted In the company letter head by supplier)**

Subject: Public Procurement (Insertion of Rule 144 xi in the General Financial Rules 2017)

References:

https://doe.gov.in/sites/default/files/OM%20dated%2023.07.2020.pdf

https://doe.gov.in/sites/default/files/Clarification%20to%20order%20public%20Procurement%20NO%201%20dated%2023%20July%202020.pdf

https://doe.gov.in/sites/default/files/Exclusion%20from%20restrictions%20under%20Rule%20144%20xi%20of%20the%20General%20Financial%20Rules%202017.pdf

From.

M/s_____

Address:_____

I/we are bidder from _____ (country). We does not belong to any of the below category mentioned.

1. Any of entity/office/workshop of your organisation/incorporation, established in a country sharing land border with India, If yes, provide the full address of all such locations.

2. Any of subsidiary of your organisation/incorporation, established in a country sharing land border with India, If yes, provide the full address of all such locations.

3. Any of entity/office/workshop of your organisation/incorporation, controlled in a country sharing land border with India, If yes, provide the full address of all such locations.

4. Any of entity whose beneficial owner is situated in a country sharing land border with India, If yes, provide the full name, address of all such locations.

5. Any Indian Agent available, If so, Provide details of address and contacts.

6. Any employee/directors who is/are citizen of country sharing land border with India, If yes, provide the full name, employee code and address of all such locations.

7. Any of consortium/joint venture of your organisation/incorporation, established in a country sharing land border with India, If yes, provide the full address of all such locations.

***(To be submitted In the company letter head by supplier)**

Meaning of beneficial owner

1) In case of a company or limited liability partnership, beneficial owner is the natural person, who, whether acting alone or together, or through one or more judicial person, has a controlling ownership interest or who exercises control through other means.

Explanation

a) Controlling ownership interest means ownership of or entitlement to more than twenty-five percent of shares or capital or profits of the company.
b) "control" shall include the right to appoint majority of the directors or to control the management rights or shareholder's agreement or voting agreement.

2) In case or a partnership firm the beneficial owner is the natural person (s) who whether acting alone or together or through one or more judicial person, has ownership of the entitlement to more than fifteen percent of capital or profits of the partnership.

3) In case of an unincorporated association or body of individuals, the beneficial owner is the natural person(s), who, whether acting alone or together or through one or more judicial person, has ownership of the entitlement to more than fifteen percent of the property or capital or [profits of such association or body of individual.

4) Where no natural person is identified under (1) or (2) or (3) above, the beneficial owner is the relevant natural person who holds the position of senior managing official.

5) In case of a trust, the identification of beneficial owner (s) shall include identification of the author of the trust, the trustee, the beneficiaries with fifteen percent or more interest in the trust and any other natural person exercising ultimate effective control over the trust and any other natural person exercising the ultimate effective control over the trust through a chain of control of ownership.

6) An agent is a person employed to do any act for another, or to represent another in dealing with third person.

We have read the clause regarding restriction on procurement from a bidder of a country which shares a land border with India, we hereby declare that we do not belongs to any such country and are eligible to be considered.

In case, any of information is found to be false, even after bid acceptance, immediate termination may happen and action will be taken as per law.

Format is being filled without altering any of the clause mentioned in the given format**

Dated: _____

Authorised Sign and stamp_____

***(To be submitted In the company letter head by supplier)**

Declaration of Local Content by Local supplier

Subject: Public Procurement (Preference to Make In India)

References:
Preference to Make in India including counter offering will be as per the Public Procurement (Preference to Make in India), Order 2017 available in the following links https://dipp.gov.in/public-procurements

http://dipp.nic.in/sites/default/files/publicProcurement_MakeinIndia_15June2017.pdf
http://dipp.nic.in/sites/default/files/Revised-PPP-MII-Order-2017_28052018.pdf
https://dipp.gov.in/sites/default/files/PPP-MII%20Order%20dt%2029th%20May%2019_0.pdf
https://dipp.gov.in/sites/default/files/PPP%20MII%20Order%20dated%204th%20June%202020.pdf

We hereby declare with reference to above subject and references that

M/s ----------(Tick whichever is applicable as below)

"Class-I local supplier" meeting the requirement of minimum local content equal to 50% (fifty percent) or more defined in the above government notification for the goods and services
(or)
"Class-II local Supplier" meeting the requirement of local content 20% to less than 50% (fifty percent) defined in the above government notification for the goods and services

(or)

Non Local supplier (If not belonging to Class-I & Class-II)

Please mention the details against the following:

Enquiry no:---------- dated. ----------

Type of Supplier (Class-I/Class-II) ……

Product:----------

Project:……..

Details of location at which local value addition will be made is as follows:

We also understand that the false declarations will be in breach of the code of Integrity under rule 175(1)(i)(h) of the General financial rules for which a bidder or its successors can be debarred for up to two years as per Rule 151(iii) of the General Financial Rules along with such other actions as may be permissible under law.

Authorized Signature M/s----------
(Signature and seal)

Place:……..

Date:……