COPY RIGHT AND CONFIDENTIAL

THE INFORMATION ON THIS DOCUMENT IS THE PROPERTY OF BHARAT HEAVY ELECTRICALS LIMITED. IT MUST NOT BE USED DIRECTLY OR INDIRECTLY IN ANY WAY DETRIMENTAL TO THE INTEREST OF THE COMPANY.

PROJECTS : KAPP UNIT 3 & 4 2X700MWe (TISCS Package)
: RAPP UNIT 7 & 8 2X700MWe (TISCS Package)

CUSTOMER : M/s. NPCIL, MUMBAI

Please note that COMMERCIAL TERMS & CONDITIONS consisting of Special Commercial Conditions of contract, Instructions To Bidders & General Commercial conditions of contract have not been enclosed in this document due to space constraint.

Hence, request you to please visit website: www.bheledn.com for these three documents and RFQ copy.

TECHNICAL SPECIFICATION FOR 24V DC POWER SUPPLY SYSTEM

Rev01:
Certain standards are removed. Such standards are striked off in this revision document in RED
Rev02:
Correction are marked in BLUE at pg 27 & 77.
NPCIL standards are attached

APPROVED		
RAJASEKAR K		
PREPARED	ISSUED	DATE
AMIT KR SHARMA	416	25 / 9 /15

CONTENTS

SECTION	DESCRIPTION
A	GENERAL INSTRUCTIONS TO BIDDERS
B	PRE-QUALIFICATION REQUIREMENTS
C	SCOPE OF SUPPLY
D	TECHNICAL REQUIRMENTS
E	ANNEXURES

COPY RIGHT AND CONFIDENTIAL

THE INFORMATION ON THIS DOCUMENT IS THE PROPERTY OF BHARAT HEAVY ELECTRICALS LIMITED. IT MUST NOT BE USED DIRECTLY OR INDIRECTLY IN ANY WAY DETRIMENTAL TO THE INTEREST OF THE COMPANY.

COPY RIGHT AND CONFIDENTIAL
THE INFORMATION ON THIS DOCUMENT IS THE PROPERTY OF BHARAT HEAVY ELECTRICALS LIMITED. IT MUST NOT BE USED DIRECTLY OR INDIRECTLY IN ANY WAY DETRIMENTAL TO THE INTEREST OF THE COMPANY.

SECTION- A

GENERAL INSTRUCTIONS TO BIDDERS:

Introduction: Bidders are required to offer 24V DC Charger system to be used for powering DCS panels of secondary cycle of Nuclear Power Plants. All required documents against this Tender/Specification shall be submitted in English only.

Pre-qualification requirements (PQR) are clearly mentioned in Section-B of this Specification. In case Bidder does not meet Pre-qualification requirements, their offer will be summarily rejected and Bidder's Technical offers will not be evaluated.

1. **Evaluation methodology:**
   a) BHEL shall initially open Bidder's PQR documents (to be submitted as per Section-B clause-AA) only, for review, evaluation & acceptance by BHEL.
   b) Technical bids shall be opened for review and further consideration for only those bidders who meet Pre-qualification requirements. Technical offer of bidders who does not meet Pre-qualification requirements will not be opened for further consideration and shall be declared as technically rejected.
   c) Bidders declared qualified for meeting requirements mentioned in section B and are presently not registered with BHEL EDN Bangalore for supplying the charger system, shall be informed by email to submit online BHEL vendor registration form at www.bhel.com.
   d) Bidders declared qualified for meeting section-B requirements and are not approved by end customer (M/s NPCIL) for the project, their credentials documents as provided by bidder (under section-B), shall be forwarded to NPCIL for approval.
   e) Bidders who are not approved by customer (M/s NPCIL), their offers shall be technically rejected and shall not be considered for further process for procurement.

2. **Submission of documents:**

   a. Documents pertaining to Pre-Qualification requirement Section B clause AA should be submitted in a Separate cover. "Section B clause AA" should be written on this cover.
   b. Documents pertaining to Pre-Qualification requirement (Section B clause BB) should be submitted in a Separate cover marked as "Section B clause BB".
   c. Technical offers/proposals pertaining to Sections C & D should be submitted in a separate cover marked as "Technical offer".

3. Whenever required during evaluation of PQR and Technical offers/bids, vendor should be present at BHEL Electronic Division, Bangalore, for discussions. Further in the event of order, during approval of the Vendor documents by Customer, Vendor shall accompany BHEL representative for discussions.

4. This specification does not prohibit any vendor to submit their offer along with clause wise deviation from the specification.

COPY RIGHT AND CONFIDENTIAL
THE INFORMATION ON THIS DOCUMENT IS THE PROPERTY OF BHARAT HEAVY ELECTRICALS LIMITED. IT MUST NOT BE USED DIRECTLY OR INDIRECTLY IN ANY WAY DETRIMENTAL TO THE INTEREST OF THE COMPANY.

SECTION- B

Clause AA

Pre-Qualification Requirements (PQR) of Bidders for 24V DC charger system:

a) The bidder should be a reputed manufacturer who have been in the field of manufacturing DC Chargers for not less than 10 years and have designed, engineered, manufactured and supplied 24V DC Chargers which are equal to or superior than specification provided in this document, to atleast two nuclear / thermal power units which are in successful commercial operation for at least 2 years under similar condition as specified in this document. Supporting documents like PO copies, performance certificates issued by user, MOM for commissioning and handing over of system etc should be provided.

b) Original Equipment Manufacturers (OEM) based outside India, who are submitting offer for this tender, shall have authorized representatives in India for support related to Documentation, technical support, troubleshooting, Erection, Commissioning & any other co-ordination work. Letter from OEM detailing Indian representative organization details should be provided.

c) OEM to furnish an undertaking letter that in case of change in Indian representative / agent, OEM shall continue to support the supplies made through this tender.

d) BHEL shall issue call for service / commissioning with maximum 15 days' notice. Bidder to submit undertaking letter for agreeing to visit project sites within above notice period.

COPY RIGHT AND CONFIDENTIAL
THE INFORMATION ON THIS DOCUMENT IS THE PROPERTY OF BHARAT HEAVY ELECTRICALS LIMITED. IT MUST NOT BE USED DIRECTLY OR INDIRECTLY IN ANY WAY DETRIMENTAL TO THE INTEREST OF THE COMPANY.

SECTION- B

Clause - BB

Along with the documents related to PQR above, following details shall also be included in the Offer:

1. Technical literature / datasheets of offered System (as per technical specification Section – C & D) to be submitted.
2. Submit List of Projects for which offered system is supplied, commissioned and working satisfactorily for more than 2 years (as per PQR requirements).
3. Name & registered address of the Indian branch office or Indian representative for support of E&C and after sales service with Organization chart.
4. Bidder shall have facility in India for Engineering activities, preparation of Documents, trouble shooting and commissioning of the system. Documents substantiating these to be submitted.
5. If Bidder is not Original Equipment Manufacturer (OEM), then Bidder to include Authorization letter from OEM for Design, Engineering, Manufacture, Testing, supply, Erection, Commissioning and Servicing of the offered System. This Authorization letter provided by OEM to Bidder shall indicate the Type and Duration of Validity of the agreement.

Important note: All bidders, irrespective of being already registered/approved by BHEL/NPCIL, should furnish all documents mentioned in Section-B failing which their offer is liable to be rejected.

COPY RIGHT AND CONFIDENTIAL

THE INFORMATION ON THIS DOCUMENT IS THE PROPERTY OF BHARAT HEAVY ELECTRICALS LIMITED. IT MUST NOT BE USED DIRECTLY OR INDIRECTLY IN ANY WAY DETRIMENTAL TO THE INTEREST OF THE COMPANY.

SCOPE OF SUPPLY

REVISION: 00

APPROVED

RAJASEKAR K

PREPARED	ISSUED	DATE
AMIT KR SHARMA	416	28 / 8 /15

COPY RIGHT AND CONFIDENTIAL
THE INFORMATION ON THIS DOCUMENT IS THE PROPERTY OF BHARAT HEAVY ELECTRICALS LIMITED. IT MUST NOT BE USED DIRECTLY OR INDIRECTLY IN ANY WAY DETRIMENTAL TO THE INTEREST OF THE COMPANY.

1. SCOPE_OF_SUPPLY

A) Main item supplies shall consist of following:

Sl no	Description of Item	Quantity for KAPP unit 3&4	Quantity for RAPP unit 7&8
1	**Float cum Boost Main charger of 625Amp**	**4nos**	**4nos**
2	**Standby Boost charger of 625Amp**	**2nos**	**2nos**
3	**DCDB**	**4nos**	**4nos**
4	**Switch Fuse Unit**	**4nos**	**4nos**
5	**BHMS system**	**4nos**	**4nos**
6	**ETHERNET MODBUS connectivity to DCS (incl all items required)**	**6nos**	**6nos**
7	**Erection supervision, commissioning, site testing and handing over**	**2sets***	**2sets***

*** Each set consisting of 2 nos of main charger and 1 no of standby charger**

B) Mandatory spares: The Spares are to be supplied as below separately for each project:

a) 10% of the plug-in sub assemblies/units or at least one unit, whichever is more.

b) 10% of the components like thyristors/transistors not mounted on the sub assemblies/units or at least one component whichever is more.

Complete BOM of all system mentioned above & mandatory spares BOM derived from it should be provided.

The bidder shall provide unit rate of each main item like main charger, standby charger, DCDB, Switch Fuse unit, BHMS System, Erection supervision & commissioning charges in price bid. Unit rate of each item of mandatory spares must be provided in price bid.

2. Training:

4 Nos. of NPCIL engineers shall be trained at supplier's works for operation and maintenance. To & fro conveyance charges, boarding & lodging charges will be borne by the NPCIL. Training charges, if any, shall be mentioned in the offer. If training is free, the same shall also be mentioned in the offer clearly.

3. Documents to be submitted:

3.1 Following documents shall be furnished to BHEL as a minimum, apart from any other documents required to be submitted as called elsewhere in the specification.

3.2 **Along with the Technical offer**: For technical evaluation, vendor must send one (01) set of the following documents in hard copy.

01. Single line diagram, Circuit diagrams, schematic drawing
02. GA drawings, weight, outline dimension
03. Fault co-ordination details
05. Technical write-up / Technical literature / Catalog of each major component
06. Wiring diagram/interconnecting arrangement details
07. Complete Bill of Material with make & Model
08. Clause-wise compliance/deviation list, clearly indicating compliance/deviation to all the clauses mentioned in this specification

NOTE: - Later no explanation on noncompliance or deviation, stated or observed, shall be acceptable. Incomplete offers (without documents / not relevant documents as mentioned above) will be technically rejected without any notice.

COPY RIGHT AND CONFIDENTIAL
THE INFORMATION ON THIS DOCUMENT IS THE PROPERTY OF BHARAT HEAVY ELECTRICALS LIMITED. IT MUST NOT BE USED DIRECTLY OR INDIRECTLY IN ANY WAY DETRIMENTAL TO THE INTEREST OF THE COMPANY.

3.3 **After placement of Purchase Order within 1 week**: For BHEL/Consultant/Customer approval, Vendor must send Eight (8) sets of the following documents in hard copy & one (01) CD in soft copy, for each project.

a) All documents Sl. No 01 ~ 13 as above.
b) Interfacing diagram & cable type details used or suggested.
c) Quality Plan format enclosed as part of the specification.
d) Test Procedure: The equipment shall be tested as per approved test procedure.

3.4 **After Type Test but before Inspection :** For BHEL/Consultant/Customer approval, vendor must send two (2) Sets of the following documents in hard copy & one in soft copy.
01. Type test reports/Certificates as per specification/approved QP
02. Preliminary Instruction /O&M Manual

3.5 **Along with the materials being dispatched:** Vendor must send five (5) sets of the following "**As Built & Approved"** status documents four (4) in hard copies & one (1) in soft copy.
(a) Instruction/O&M Manual
(b) Bill of Material
(c) Data Sheets
(d) Technical literatures/Catalogs
(e) Drawings GA/layout/wiring/interconnection/schematic, etc.)

Instruction/O&M Manual: It shall include
a. General Information
b. Principal technical data.
c. Description of components.
d. Description of various controls with block schematics.
e. Operating instructions.

COPY RIGHT AND CONFIDENTIAL

THE INFORMATION ON THIS DOCUMENT IS THE PROPERTY OF BHARAT HEAVY ELECTRICALS LIMITED. IT MUST NOT BE USED DIRECTLY OR INDIRECTLY IN ANY WAY DETRIMENTAL TO THE INTEREST OF THE COMPANY.

TECHNICAL SPECIFICATIONS OF 24V DC CHARGER (MAIN AND STANDBY CHARGER)

REVISION: 00

APPROVED

RAJASEKAR K

PREPARED	ISSUED	DATE
AMIT KR SHARMA	416	28 / 8 /15

COPY RIGHT AND CONFIDENTIAL
THE INFORMATION ON THIS DOCUMENT IS THE PROPERTY OF BHARAT HEAVY ELECTRICALS LIMITED. IT MUST NOT BE USED DIRECTLY OR INDIRECTLY IN ANY WAY DETRIMENTAL TO THE INTEREST OF THE COMPANY.

1.0 SCOPE

The scope of this specification covers the design, manufacture, testing, supply, delivery and commissioning of the Main and standby Battery Chargers for KAPP 3&4 and RAPP 7&8 projects.

2.0 CONTENTS

The requirements of this specification are presented under following section headings.

Description	Section
Applicable standards, specifications and drawings.	3
Materials, processes and workmanship.	4
General functions and description.	5
Design requirements.	6
Inspection, tests and reports	7
Tests	8
Packing and Shipment	9
Information required with the bid	10
Technical details required with the bid.	Annexure-A
Quality Assurance Plan (Sample)	Annexure-B
Details of alarms and indications	Annexure-C
Block diagram of charger	Annexure-D

3.0 APPLICABLE STANDARDS, SPECIFICATIONS AND DRAWINGS

All documents listed below constitute a part of this specification. In the event that certain requirements of specifications, drawing or data listed below conflict with the requirements of specification, the requirements of this specification shall govern.

3.1 Applicable Standards

IS-11171 : Dry type power transformers
IS-11794 : Lamination for transformers & inductors for telecom & electronic equipment
IS-3895 : Monocrystalline semiconductor rectifier cells and stacks
IS-4540 : Monocrystalline Semiconductor rectifier assemblies and equipment
IS-5051 : Relays for Electronics and Telecommunication Equipment
IS-60947 : Specification for Low-Voltage Switchgear and Control gear
IS-60898 : Miniature circuit breaker
IS-14901 : Semiconductor Devices - Discrete Devices and Integrated Circuits
IS-2705 : Current transformers
IS-3156 : Voltage transformers
IS-5553 : Reactors (Inductors)
IS-13703 : Low voltage fuses for voltages not exceeding 1000 V AC or 1500 V DC
IS-1248 : Direct Acting Indicating Analog Electrical Measuring Instruments & Accessories
IS-5786 : Fixed resistors general purpose, low power
IS-7788 : Single phase traction power converters
IEC-60146 : Semiconductor converters
IS-8872 : Variable resistors
IS-2786 : Ceramic dielectric capacitors
IS-4317 : Aluminium electrolytic capacitors with non solid electrolyte
IS-4794 : Push button switches
MIL 883G : Test method standard: Microcircuits
IS-694 : PVC insulated cables for working voltages up to and including 1100V
IS-513 : Cold rolled low carbon steel sheets and strips
IS-6005 : Code of practice for phosphate coatings of iron and steel
IS-5 : Colour for ready mixed paints

COPY RIGHT AND CONFIDENTIAL
THE INFORMATION ON THIS DOCUMENT IS THE PROPERTY OF BHARAT HEAVY ELECTRICALS LIMITED. IT MUST NOT BE USED DIRECTLY OR INDIRECTLY IN ANY WAY DETRIMENTAL TO THE INTEREST OF THE COMPANY.

IS-9000(Part-III) :Basic environmental testing procedure for electronic & electrical item: Dry heat test
IS-9000 (Part V) :Basic environmental testing procedures for electronic & electrical items: Damp heat (cyclic) test
~~IEEE-946 : IEEE recommended practice for the design of safety related DC auxiliary Power systems for Nuclear Power Generating Station~~
~~IEEE-650 : IEEE standard for qualification of Class-1E static battery chargers and inverters for Nuclear Power Generating Station~~
~~IEEE-344 : IEEE recommended practices for seismic qualification of Class 1E equipment for Nuclear Power Generating Station~~

3.2 Applicable Specifications
PP-E-1443: Specification for the manufacture of single sided, double sided and multi layered printed wiring boards.
PP-E-2061: Specifications for requirements of components for instrumentation items.
~~PC-E-409: Technical specification for (polyamide) & accessories for non radiation area for 700MWe.~~
PC-E-710 : Engineering Standard for Electromagnetic Compatibility Qualification of C&I Equipment

4.0 MATERIALS, PROCESSES AND WORKMANSHIP
4.1 Materials and Processes
The materials, processes and standard parts which are not specifically described herein and which are necessary to meet this specification shall be of first class commercial quality and in accordance with the good practice pertinent to the equipment's. All components used shall be "type approved" or shall have gone through a satisfactory quality assurance test programme. As far as possible components shall be adequately derated so as to increase the system reliability. Use of integrated circuits is preferred. All the semiconductor components shall be of silicon.

4.2 Workmanship
The workmanship shall be of high industrial quality to ensure satisfactory operation and service life of 40 years in accordance with the provisions of this specification. The units shall be modular and access to any portion of the unit shall be easily available for maintenance and adequate tests points shall be provided for trouble shooting purposes.

4.3 Tropicalisation
The design, material used, manufacturing and assembly shall be done to render the parts and assembled equipment moisture, fungus, microorganism and termite resistant. Proper surface treatment of the moisture and fungus susceptible parts of the component and their assembly shall be done. Care shall be taken during treatment to avoid its effect on the performance of the component and its assembly.

5.0 Environmental conditions
Normal operating conditions
Ambient temperature from 8ºC to 45ºC and relative humidity up to 90 %
Occasional/Storage conditions
Ambient temperature from 5ºC to 55ºC and relative humidity up to 95 %

COPY RIGHT AND CONFIDENTIAL
THE INFORMATION ON THIS DOCUMENT IS THE PROPERTY OF BHARAT HEAVY ELECTRICALS LIMITED. IT MUST NOT BE USED DIRECTLY OR INDIRECTLY IN ANY WAY DETRIMENTAL TO THE INTEREST OF THE COMPANY.

6 System Concept of 24V DC charger

The Battery Charging equipment shall comprise of Charger-I & Charger-II and one common standby charger for each unit (refer charger block diagram). The input supply to the DCPS shall be fed through a two winding transformer to ensure proper galvanic isolation from the input source. The DCPS shall be able to produce output voltage ranging from 24V DC to 31.2V DC adjustable through potentiometer. The DCPS shall have soft start feature. SCRs shall be used for converting AC to DC.

There shall be two selector switches on front panel, one switch for Auto/Manual mode selection and second switch for Boost / Equalising / Float operation.

6.1 General features of Float cum boost (FCB) MAIN CHARGER:

The DCPS shall have provision for operating satisfactorily in any of following conditions:

6.1.1 Supply of load at 24V DC (nominal) and float charging of batteries:

The DCPS shall supply control loads at 24V DC nominal and simultaneously trickle charge the battery at float voltage of 28.6V. Diode Voltage Regulator (DVR) in series shall be used so that voltage in the range of 24.7V DC to 26.4V DC is available at DC output bus after the DVR for supplying the load and simultaneously float charge the battery at 28.6V. DVR shall be cut-off at the outage of DC power supply while battery is getting discharged. A bypass switch shall be provided which will bypass the DVRs so that direct charger output is available at DCDB

6.1.2 Supply of load at 24V DC (nominal) & Boost charging of Batteries at 2.4VPC:

Following the loss of AC supply to the 24V DCPS, the Battery will feed the power to 24V DC loads. The discharged Batteries are required to be recharged. The DCPS shall supply control loads at 24V DC (nominal) and simultaneously automatic boost charge the Batteries at boost voltage of 31.2 VDC. Diode Voltage Regulator (DVR) in series shall be used so that voltage in the range of 23.4V DC to 27.6V DC is available at DC output bus after the DVR for supplying the load and simultaneously boost charging the Battery at 31.2 VDC.

The DCPS shall have provision for charging batteries satisfactorily in both Manual and Automatic Mode with the help of selector switch provided on the DCPS front panel

6.1.2.a Automatic Mode:

In the automatic boost charging mode, the DCPS shall charge the batteries with battery charging a preset current limit of 10% of rated battery capacity. The DCPS voltage shall be set at 2.4V/cell i.e. 31.2V for 13cells. As soon as the battery voltage reaches at 30.55V, a timer shall start counting for a preset duration. Voltage shall remain constant at 31.2V during the preset duration. Once the preset time period is over, the charger voltage shall automatically come down to float voltage of 28.6V. The timer shall have provisions for setting time duration of 4hrs / 6 hrs / 8hrs / 10hrs / 12hrs / 14hrs / 18hrs.

6.1.2.b Manual Mode:

In the manual boost charging mode the boost charging voltage shall be adjustable through voltage adjustment potentiometer to the required voltage in the range of 26V to 31.2V. The DCPS voltage shall be set at 2.4V/cell i.e. 31.2V. The DCPS shall charge the battery with current limit of 10% of battery rating. The DCPS shall be manually stopped after three consecutive hourly voltage readings are constant at specific gravity of 1.2 ± 0:0005.

A bypass switch shall be provided which will bypass the DVRs so that direct charger output during boost charging is available at DCDB

COPY RIGHT AND CONFIDENTIAL
THE INFORMATION ON THIS DOCUMENT IS THE PROPERTY OF BHARAT HEAVY ELECTRICALS LIMITED. IT MUST NOT BE USED DIRECTLY OR INDIRECTLY IN ANY WAY DETRIMENTAL TO THE INTEREST OF THE COMPANY.

6.1.3 Supply of Loads at 24V DC (nominal) & also Equalizing Charging of Batteries:
Equalizing charging of lead acid batteries shall be done in the following modes:

6.1.3.a Automatic mode:
In the automatic equalising charging mode, the 24V DCPS shall· have provision for charging at constant potential mode i.e. 29.9V (2.3V/cell). The current limit shall be set at 5% of rated battery size. A facility for equalizing charging with preset timer shall be provided with adjustable duration of 2hrs / 4hrs / 6 hrs / 8hrs / 10hrs / 12hrs. After the preset lime the DCPS shall change over to float mode and equalizing charging shall be stopped automatically.

6.1.3.b Manual mode:
In the manual equalizing charging mode provision for equalizing 24V DC lead acid battery shall be made with features as mentioned for automatic mode but without a preset timer. The equalizing charging shall be stopped manually after the required duration as per battery manufacturer's recommendation.

6.1.4 Initial Charging of Batteries:
24V DCPS shall be able to provide initial charge to the batteries at constant current of 12% of battery size till the individual cell voltage in the battery bank reaches 2.4V DC. Further 51 amps constant current shall be provided till the battery gets fully charged. Total AH to be fed to the battery shall be 6 times of battery size. DC voltage may reach up to 40.3V

6.2 General features of STANDBY CHARGER (SBC):
The 26V DC Battery Charger shall function as standby charger to the existing 24V DCPS. These will be used for
(a) Boost charging the battery upon the discharge of the battery following the mains failure
(b) Equalization charging of batteries
(c) Supply the load and charging the batteries
(d) Initial charging of the batteries.

26V DC standby battery charger is connected to 26 V DC lead acid batteries through three position double pole battery selector switch located inside standby charger through switch fuse units respectively. The scheme is shown in the Sketch provided in Annexure-D. The switch fuse units are not mounted inside the battery charger. They are floor mounted type and located in the respective battery rooms. The switch fuse units are also to be supplied by the Charger vendor and these shall be supplied in loose.

The charger is fed from 415V AC. 3 phase, 50 Hz from class-III supply. The input supply to the SBC shall be fed through a two winding transformer to ensure proper galvanic isolation from the input source. The SBC shall be able to produce output voltage ranging from 24V DC to 40.3V DC. The charger shall have soft start feature. SCRs shall be used for converting AC to DC.

COPY RIGHT AND CONFIDENTIAL
THE INFORMATION ON THIS DOCUMENT IS THE PROPERTY OF BHARAT HEAVY ELECTRICALS LIMITED. IT MUST NOT BE USED DIRECTLY OR INDIRECTLY IN ANY WAY DETRIMENTAL TO THE INTEREST OF THE COMPANY.

6.2.1 Operation:
The standby battery charger shall have provision for operating satisfactorily in both a) Manual and b) Automatic Mode with the help of selector switch provided on the standby battery charger front panel. There shall be two selector switches on front panel, one switch for Auto/Manual mode selection & other for Initial / Boost / Equalising / Float operation.

6.2.2 Initial Charging of Batteries: 24VDC SBC shall be able to provide initial charge to the batteries at constant current of 12% of rated battery size till the individual cell voltage in the battery bank reaches 2.4V DC. Further 6% of rated battery constant current shall be provided till the battery gets fully charged. Total AH to be fed to the battery shall be 6 times of rated battery size. DC voltage may reach up to 40.3 Volts. The 24V DC SBC shall be suitably designed.

6.2.3 Boost Charging of Batteries: Following the loss of AC supply to the 24V DCPS, the batteries will feed the power to 24V DC loads. The discharged batteries are required to be recharged by 26V DC SBC. The SBC shall provide boost charging current to the batteries and shall be able to operate in the following modes.

6.2.3.1 Automatic Mode: In the automatic boost charging mode the 26 VDC SBC shall charge the battery with battery charging current limit set at 10% of battery Ah through battery selector switch on front panel. The charger shall have provision to boost charge the batteries at 2.4V/cell
a) Charging at 2.4V /Cell: The charger voltage shall be set at 2.4V/cell i.e. 31.2V. The charger shall charge the batteries with current limit of 10% of battery size. As soon as the battery voltage reaches at 30.55V, a timer shall start counting for preset duration. Voltage shall remain constant at 31.2V during the preset duration. Once the preset time period is over the charger voltage shall automatically come down to float voltage of 28.6V. The timer shall have provisions for setting time duration 4hrs/6hrs/8hrs/10hrs/12hrs/14hrs/18hrs.
b) Charging at 2.75 V/Cell: The charger voltage shall be set at 2.75V/cell. The charger shall charge the batteries with current limit of 10% of battery size. As soon as the battery voltages reaches at 1.2V, the current limit shall change automatically to 5% of battery size and the timer shall start counting for preset duration. The function of the timer and mode of charging shall be same as clause no. ‘a’ above.

6.2.3.2 Manual Mode: In the manual boost charging mode the boost charging voltage shall be adjustable through voltage adjustment potentiometer to the required voltage in the range of 26V to 35.75V. The charger shall have provision to boost charge the batteries at 2.4V/cell.
a) Charging at 2.4V/cell: The charger voltage shall be set at 2.4V/cell i.e. 3 1.2V. The charger shall charge the batteries with current limit of 10% of battery Ah. The charger shall be manually stopped after three consecutive hourly voltage readings are constant at specific gravity of 1.2 ± 0.0005.
b) Charging at 2.75V/cell: The charger voltage shall be set at 2.75V/cell. The charger shall charge the batteries with current limit of 10% of battery Ah. As soon as the battery voltage reaches at 31.2V the current limit shall change automatically to 5% of battery Ah and the charger shall be manually stopped after three consecutive hourly voltage readings are constant at specific gravity of 1.2 ± 0.0005.

COPY RIGHT AND CONFIDENTIAL
THE INFORMATION ON THIS DOCUMENT IS THE PROPERTY OF BHARAT HEAVY ELECTRICALS LIMITED. IT MUST NOT BE USED DIRECTLY OR INDIRECTLY IN ANY WAY DETRIMENTAL TO THE INTEREST OF THE COMPANY.

6.2.4 Equalizing charging of batteries:

The battery shall be given an equalizing charge at regular intervals during its life span at constant voltage to correct any inequalities among cells of the battery that may develop during its service. The equalizing charge voltage shall be approximately 2.3V/cell. The SBCs shall provide equalising charging to the batteries in the following modes.

a) **Automatic mode:** In the automatic equalising charging mode the charger shall have provision for charging at constant potential mode i.e. 29.9V (2.3V/cell). The current limit shall be set at 5% of battery Ah. A facility for equalising charging with preset timer shall be provided with adjustable duration of 2hrs/4hrs/8hrs/12hrs. After the preset time the charger shall change over to float mode and equalising charging shall be stopped automatically.

b) **Manual mode:** In the manual equalising charging mode provision for equalizing for 26V DC lead acid batteries shall be made but without a preset timer. The equalising charging shall be stopped manually after the required duration as per battery manufacturer's recommendation.

6.2.5 Supply the load and boost charge the batteries:

In addition to boost charging and equalizing charging of batteries, Stand by Battery Charger shall have capability to simultaneously boost charge the batteries and supply normal load. The charger shall have provision of boost charging 26V DC lead acid batteries at 31.2V and simultaneously supply loads.

6.3 Switch Fuse Unit:

Two 24V DC switch fuse units with typical connections shown in drawing in Annexure-D of this specification of suitable current rating shall be provided. Each project unit shall contain two individual switch fuses connected as shown. It should be possible to connect the DCPS, Stand by Battery Charger battery and battery testing load. Bus bars shall be provided for the above in the switch fuse unit. The switches shall, conform to IS-4064. The fuses shall conform to IS-2208. The switch fuse unit shall be floor mounted type.

6.4 Design Parameters

6.4.1 INPUT: The DCPS shall be suitable for operation on a nominal input sinusoidal symmetrical supply of 415V, 3 phase, 3 wire, 50 cycles. The steady state input voltage and frequency variation will be as below.

Voltage variation	+ 10%
Frequency variation	+ 5%
Combined voltage & frequency variation-	+ 10%
Voltage unbalance	+ 3%

The DCPS shall be capable of maintaining the following at the input side:

Input current harmonics	<12%
Power factor	>0.8

6.4.2 OUTPUT OF MAIN CHARGER

Output voltage	24V DC nominal
Output voltage range:	
i) Load	24.7V DC to 26.4V DC after DVR during float mode
	23.4V DC to 27.6V DC after DVR during boost mode.
ii) Battery Charging	
a) Float voltage	28.6V(2.2V / cell)
b) Boost voltage	31.2V(2.4V / cell)

COPY RIGHT AND CONFIDENTIAL
THE INFORMATION ON THIS DOCUMENT IS THE PROPERTY OF BHARAT HEAVY ELECTRICALS LIMITED. IT MUST NOT BE USED DIRECTLY OR INDIRECTLY IN ANY WAY DETRIMENTAL TO THE INTEREST OF THE COMPANY.

6.4.2 OUTPUT OF STAND BY CHARGER

Output voltage 26V DC nominal
Output voltage range

Sl.No.	Charging Mode	26VDC SBC
i)	Initial (ill 3.1 VPC	40.3V
ii)	Float @ 2.2 VPC	28.6V
iii)	Boost @ 2.4 VPC @2.7SVPC	a) 31.2V b) 3S.75V
iv)	Equalizing @ 2.3 VPC	29.9V

COMMON DESIGN PARAMETERS FOR MAIN / STANDBY CHARGER

Steady state regulation Output voltage	± 1% of set voltage
Transient regulation (On sudden application or removal of 100% load)	± 20% of set voltage
Recovery time of voltage from transient condition to rated output voltage	500ms
Ripple content in DC output	Less than 2% (with battery disconnected)
Boost charging current limit	10% of rated full load current
Type of earthing	Floating w.r.t ground
Maximum noise level	75 dB
Efficiency	≥ 80% at full load and nominal input / output
Overload Capacity	: 110% for 30mins ; : 150% for 1 minute : MCB Clearance as per section 8.2.10

6.5 Protection Controls & Power:

6.5.1 Protection:

D.C Output Side: The circuit interruption on DC side shall be by means of DC CB.
The vendor shall provide.

a) **Instantaneous trip protection** in the event of a short circuit if the DCPS is connected with reverse polarity to the station battery.

b) **Instantaneous trip protection** to provide over current protection to each rectifier / thyristor. Fuses shall be provided for this protection, they shall be specifically designed for semiconductor protection. These fuses shall be properly co-ordinate with main output protection as described in a) above. All the fuses shall have an alarm contact with trip indication or alarm fuse in parallel with the power fuse having alarm contact with trip indication. In addition to fuse protection, thyristor pulse blocking method shall be adopted.

c) **Over voltage trip protection** by blocking the Rectifier and tripping the input AC CB. The over voltage device shall have continuous setting over the whole range and shall be equipped with inherent time delay so as to be insensitive to transient over voltages (spikes in grid). Contact shall be available for alarm also.

d) **Overall current limit:** The DCPS shall continue to work on overload of 110% for 30 minutes, 150% for 1minute and 200% for fuse clearance time. Charger may be tripped after above mentioned time duration at specified overload. The current limits shall be fast acting and shall be able to withstand a switched load from no load conditions 10 full load with more than 20% transient over current in the voltage range of 24V to 31.2V.

COPY RIGHT AND CONFIDENTIAL
THE INFORMATION ON THIS DOCUMENT IS THE PROPERTY OF BHARAT HEAVY ELECTRICALS LIMITED. IT MUST NOT BE USED DIRECTLY OR INDIRECTLY IN ANY WAY DETRIMENTAL TO THE INTEREST OF THE COMPANY.

e) Output Contactor shall be tripped when mains have failed, and alarm plus visual indication shall be provided.
f) Surge and lightning protection dv/dt and di/dt protection for thyristors.
g) The Supplier may provide any other protection or alarm which is necessary for the reliable trouble free and efficient performance of the equipment

6.5.2 Control Circuits:

Semi-conductors:
All semiconductor devices shall be silicon. All semiconductors shall have heat sinks of sufficient thermal rating so that the junction temperature of the devices will remain within the non-destructive limits with sufficient margin at an ambient of' 45Deg C. Silicon Control Rectifier (SCR) shall be used for rectifier. All semiconductor devices shall be adequately derated to prolong the life of devices, but shall not be derated below 0.7 of normal voltage and current or 0.5 of the normal rated power.
Transistors: The transistors are to be derated to as follows:
Collector current: 80%
Any other Voltage: 70%
Diode: The diodes are to be derated to as follows:
Forward current: 50%
Peak reverse voltage: 50%
Control Fuses: All control fuses for protection of semiconductor shall be semiconductor fuse
Capacitors: The use of electrolytic capacitors shall be kept to an absolute minimum and wherever possible tantalum capacitors shall be used. Capacitor voltage shall be derated to 50%.
Terminal Blocks: Terminal block shall be of Polyamide (nylon 6.6) and brass clamping yoke. Fire rating shall be V0 as per UL-94. Current bar shall be of copper alloy.
Resistors: All resistors mall be preferably metal oxide type and in general shall not be rated more than 50% of the manufacturer's rating. Preset Potentiometer shall be used instead of fixed resistors wherever wide range voltage and current adjustments are necessary and shall be provided with locking devices. Wire wound resistors shall be used in snubber circuits and as bleeder resistors. Power of resistors shall be derated to 50%.
Relays: All relays shall be compact, hermetically sealed and dust proof to provide maximum reliability and shall be free from contact deterioration. Freewheeling diode shall be provided as integral part of relay.
Connectors: All connectors shall be suitably plated to provide good contact. The connector shall be designed in a manner to avoid plugging in wrong direction.
Construction: All devices shall be manufactured on a modular basis to enable rapid replacement of a faulty module by a spare module.
Monitor Points: Monitor points shall be provided for rapid fault finding.
Meters: Indicating meters on the front panel of DCPS shall be preferably digital type with Minimum resolution of 1V for voltmeter and lA for ammeter. All meters shall have full scale accuracy of $\pm$2% minimum.

6.5.3 Power Circuits

6.5.3.1 Transformer/Choke: The power transformer/choke shall be derated to as follows:
Voltage: 90%
Current: 80% (including harmonics)

6.5.3.2 Capacitors: Electrolytic capacitors shall be used for DC purpose and non-electrolytic capacitors shall be used for AC purpose. Capacitor voltage shall be derated to 50%.

COPY RIGHT AND CONFIDENTIAL
THE INFORMATION ON THIS DOCUMENT IS THE PROPERTY OF BHARAT HEAVY ELECTRICALS LIMITED. IT MUST NOT BE USED DIRECTLY OR INDIRECTLY IN ANY WAY DETRIMENTAL TO THE INTEREST OF THE COMPANY.

6.5.3.3 Diode / Thyristors: The thyristors are to be derated to as follows:

Forward current : 80%
Peak reverse voltage : 50%
Junction temperature : 80% (Analytical calculation to be submitted by supplier)

6.5.3.4 Load Testing Facility: Provision of bus bar with suitable isolation device shall be made for connecting external load when actual load is transferred to standby DCPS through manual bypass switch.

6.6 MTBF & MTTR: Meantime between failures of the DCPS shall be about 50,000 hours. The vendor shall indicate the mean time between failure (MTBF) and meantime to repair (MTTR) for the DCPS and also basis for MTBF & MTTR.

6.7 ALARMS: All the relays used in the logic for generating alarm shall be kept in energized condition during normal operation of DCPS. The alarm shall be "OPEN TO ALARM" type with relays kept in energized condition in general. The following alarms shall be provided for each DCPS. The supplier has to do wiring and bring the terminals for purchaser's connection. The value of different parameter for alarm and trip set points is given as below.

6.7.1 General Alarms

a) DC overvoltage at the output bus	32V for alarm 34.4 V for trip
b) Output over load	110%.for alarm 1l0% for 30 minutes, 150% for 1min & 200% fuse clearance and trip set
c) Low battery for 24V DC DCPS	22.75V for Alarms
d) Battery current limit exceeded	10% of battery AH
e) DC under voltage at the output bus	22V for Alarm.

6.7.2 Remote Alarm + trip Points:

Potential free contacts shall be provided for following alarms + trip points on each DCPS. These potential free contacts shall be wired to separate terminal block and then connected to communication interface card (Ethernet communication). The communication interface card shall be provided by end customer. Control power supply for Alarms & LED indications shall be fed from both Input AC & DC battery with proper isolation and auxiliary diode. 8nos of hardwired alarms contacts (closed when normal) as shown in charger block diagram to be provided per unit for NPCIL use.

a) Output CB tripped
b) DC over voltage at the output bus.
c) Mains failure
d) Output overload (after DVR)
e) Load on standby
f) DC under voltage at output bus
g) Interruption of Main charger DC output due to short circuit/reverse polarity
f) Any other alarm suggested by the vendor.
g) Control supply failure

6.7.3 Only Alarm Points

Potential free contacts shall be provided for following parameters:

a) Rectifier fuse failure
b) Capacitor fuse failure
c) Output overload
d) Mains failure
e) Low battery for 24V DC DCPS (before DVR)
f) Control power supply failure
g) Battery Current limit exceeded.
h) DC over voltage at output bus
i) DC under voltage at output bus
j) Battery on load
k) Fan failure
I) Redundant DCPS not available
m) Equipment over temperature
n) Battery CB open
o) Any other alarm suggested by the supplier.

COPY RIGHT AND CONFIDENTIAL
THE INFORMATION ON THIS DOCUMENT IS THE PROPERTY OF BHARAT HEAVY ELECTRICALS LIMITED. IT MUST NOT BE USED DIRECTLY OR INDIRECTLY IN ANY WAY DETRIMENTAL TO THE INTEREST OF THE COMPANY.

6.7.4 LED Indication on DCPS (front panel)

a) DCPS output voltage high
b) DCPS input voltage high / low
c) Fuse failure
d) Load on standby DCPS
e) DCPS output overload (after DVR)
f) DCPS output breaker/contactors tripped
g) Fan failure
h) Equipment over temperature
i) Control power supply failure
j) Battery on load
k) Redundant DCPS not available

Alarm reset button should be provided on front panel of each charger)

6.7.5 LED ON MIMIC

a. Input CB ON
b. Rectifier ON
c. Output CB ON
d. Battery CB ON

6.7.6 Besides above following general purpose LEDs shall be provided:

a. Input RY, VB, BR
b. Manual Mode
c. Auto mode
d. Float charging
e. Initial charging
f. Equal ise charging

g. Boost charging @ 2.4 VPC
h. Boost charging@ 2.75 VPC
1. Timer ON

6.7.7 Meters on DCPS front panel

The following meters shall be provided on the front panel of the DCPS with proper labeling.

1. AC Voltmeter at input
2. AC Ammeter at input
3. Ammeter for battery charging current
4. DC Voltmeter at output
5. DC Ammeter at output
6. DC Voltmeter for standby voltage

All meters shall be LED 7 segment digital type of size approximately 48 x 96 mm and shall be suitable for flush mounting. Zero adjustment shall be possible from front side. Meters for AC voltage, DC current measurement shall be 4 and ½ digits while meters for AC current and DC voltage shall be 3 and ½ digits. Accuracy of meters shall be 1% full scale or better. All voltage circuits of meters shall have fuses. Meters shall comply IS: 8573.

6.7.8 Remote Display and Annunciation

The parameters listed below shall be converted in the form of 1-5V signals by the supplier. These signals shall be galvanically isolated for 1.5KV. The measurement accuracy shall be + 0.5%. These signals shall be wired to separate terminal block and then connected to communication interface card (Ethernet communication) as mentioned in section 6.6.2. The description and process range of the 1-5V signals to be transmitted are given below.

Description Process Range

1. DCPS input voltage 0-600V AC
2. DCPS input current 0-75A AC
3. Battery charging current 0-100A DC
4. DCPS output voltage 0-40V DC
5. DCPS output current 0-900A DC

5nos of analog signal as shown in charger block diagram shall be provided through dual output (1-5V) transducer for connectivity to DCS and NPCIL system.

COPY RIGHT AND CONFIDENTIAL
THE INFORMATION ON THIS DOCUMENT IS THE PROPERTY OF BHARAT HEAVY ELECTRICALS LIMITED. IT MUST NOT BE USED DIRECTLY OR INDIRECTLY IN ANY WAY DETRIMENTAL TO THE INTEREST OF THE COMPANY.

6.8 CONSTRUCTION:

6.8.1 Rectifiers and Thyristors:

Rectifiers shall be of mono-crystalline type silicon, capable of continuous output at specified voltages. It shall have high power efficiency and shall be equipped with voltage on AC side of rectifier control. The rectifier shall be 12 pulse, thyristor based.

HRC fuses shall be provided with trip indication along with potential free annunciation Contacts.

The silicon rectifiers or thyristors bank shall be natural air cooled.

The rectifiers or thyristors shall be protected against over voltages due to chopping surges and hole-storage with the aid of snubbers.

6.8.2 Transformers:

The transformer shall be natural air cooled dry type. The transformer design shall take care of abnormal stresses due to external short circuits. The rating of the transformer shall correspond to the rating of the rectifier considering all the losses. The transformer may have full capacity primary tap at a suitable percentage of its nominal voltage to produce D.C. voltage to equalize charge the batteries. The transformers shall be noise free. Class of insulation of transformer shall be class H. Temperature rise of the transformer shall not be more than 90deg C. The transformer shall be designed, manufactured & tested as per latest issue of IS-1117l.

6.8.3 Dimensions:

The overall dimension of each charger including DCDB shall be within 2400mm width x 800 mm depth x 2300 mm height

The overall dimension of each switch fuse unit shall be within 800 mm width x 500mm depth x 1500mm height considering the bending radius of cables to be terminated.

6.8.4 Printed Circuit Boards:

All small electrical and electronic components shall be wired on PCBs. The PCBs shall be segregated in the form of cards according to function/system and shall have printed name for function of PCB on both sides. PCBs shall be mounted in such a way that all components along with LED indication and potentiometers are visible / accessible for easy replacement and maintenance. PCB housing shall be provided with suitable guides so, that only insertion of correct PCB in right manner is possible. The PCBs shall be stacked properly within cubicles.

Double sided PCBs of glass epoxy based, copper laminated type shall be used with high quality soldering and shall be suitably enamel coated for protection against moisture and dust to ensure longer life. The PCB shall be designed to meet the requirement specified in NPC specification PPE-I443 (To be issued to the successful bidder) All PCBs shall be housed in semi draw out modular construction

6.8.5 Housing and Foundation:

The DCPS cabinet shall be fabricated from cold rolled steel sheets having a minimum thickness of 1.6mm. It shall be bidder's responsibility to select suitable sheet thickness (especially for load bearing doors) to avoid any slagging or bending. Fabrication and design of the enclosure shall be such as to make the complete assembly rigid; self supporting and free from magnetic vibration, twist and Weave. Enclosure shall be indoor type, floor mounting, suitable for forced air cooling and shall be completely dust and vermin proof. All steel parts including walls, doors and roof shall be adequately supported and stiffened to prevent flexing. All removable panels supplied for access to die interior of the housing shall be equipped with suitable captive fastenings and shall be of a size that can be conveniently handled by one man.

COPY RIGHT AND CONFIDENTIAL
THE INFORMATION ON THIS DOCUMENT IS THE PROPERTY OF BHARAT HEAVY ELECTRICALS LIMITED. IT MUST NOT BE USED DIRECTLY OR INDIRECTLY IN ANY WAY DETRIMENTAL TO THE INTEREST OF THE COMPANY.

Enclosure shall conform to protection class of IP-41. Panels shall be provided with removable lifting hooks on the top for handling. Suitable base channels (ISMC) of 100mm height shall be provided for anchoring to the floor. DCPS shall be suitable for top cable entry.

6.8.6 Ground Bus

Safety Ground Bus Bar

A safety ground bus bar of bare copper with 150 sq. mm minimum cross section shall be provided to run along the panel at the bottom. Bus bar shall be permanently brazed to the sheet steel frame work. All sub assemblies and non current carrying metal parts like doors etc shall be connected to this safety ground bus bar. Bus bar shall be accessible at both ends for connection to the station ground system. A crimp type copper lug of size 4 /0 AWG shall be provided at the end of safety ground bus bar. The safety ground bus bar shall have tapped holes at regular intervals along its length to enable cable termination of grounding wires from individual devices. A 15mm diameter hole is to be provided at each end of the bus bar. All metallic cases / modules shall be connected to the electrical earth by independent copper wire of size not less than 4 sq. mm. The colour of grounding wires shall be green. Grounding wires shall be connected on devices With suitable clamps and soldering is not permitted.

Signal Ground Bus Bar

Each cabinet shall be provided with 25mm x 6mm thick electrolytic copper bus bar conforming to IS-1897. The bus bar shall be of Electrolytic Tough Pitch (ETP) or Fire Refined High Conductivity (FRHC) grade. The signal ground bus bar shall have holes drilled at regular intervals to terminate the signal ground wire. The safety ground bus bar shall be suitably isolated from the main frame. Necessary terminal clamps and connectors for this purpose shall be in the scope of supplier.

6.8.7 Enclosure ventilation and illumination:

Enclosure shall be fan cooled, for better heat dissipation and to allow a reduced size of cubicles. Arrangement shall be provided to circulate the air homogeneously throughout the compartment. Louvers provided for ventilation shall be located in the compartment doors and bolt-on panels. The louvers shall be suitably screened or fitted to prevent entrance of vermin etc. Fan failure alarm and indication shall be provided for monitoring the healthiness of fans. Flapper circuit design shall not be used for monitoring of fan failure. The DCPS shall be able to operate satisfactorily even after failure of cooling fan for about 8 hrs on full load. All the materials used for construction shall be such that they will not independently support combustion. Round compact fluorescent lamp of 20 watts, 240V AC, I Ph shall be provided with door switch. Thermostatically controlled Space heater and 3pin 5A receptacle with plug shall be provided in each charger panel.

6.8.8 Cabling (APPLICABLE FOR BOTH MAIN & STANDBY CHARGER):

6.8.8.1 Cable supports and arrangements:

Cable entry shall be from top. Suitable termination arrangements and support shall be provided inside the DCPS. Suitable termination arrangements shall be provided including cable lugs, glands and supports inside the DCPS. The cable lugs shall be of the crimping type. All internal power wiring shall have crimped lug termination.

6.8.8.2 Bus Bars:

Hylum bariers shall be provided between bus bars of opposite polarity. Adequate space shall be given for maintenance. Cu Bus Bar of suitable rating for connecting Charger to DCDB shall be provided ensuring negligible voltage drop.

COPY RIGHT AND CONFIDENTIAL
THE INFORMATION ON THIS DOCUMENT IS THE PROPERTY OF BHARAT HEAVY ELECTRICALS LIMITED. IT MUST NOT BE USED DIRECTLY OR INDIRECTLY IN ANY WAY DETRIMENTAL TO THE INTEREST OF THE COMPANY.

6.8.9 Terminal blocks and small wiring:
Wiring of electronic circuits shall be 250 volt grade 1.5 sqmm minimum. Wiring between terminals of various devices shall be point to point (no wire splitting or Connections with wires trunked). It shall be so arranged that instruments or devices may be removed and/or services without unduly disturbing the wiring. Each wire shall be identified at both ends with wire numbers corresponding to the numbers shown in the supplier's drawings. Wire marks used shall be non-deteriorating type. All control wiring shall be adequately segregated and protected from fault.
Provisions shall be made for grounding voltage and current transformer neutrals where required. Wiring affected by stray electromagnetic fields shall be suitably shielded or run as twisted pairs wherever applicable
Terminal blocks shall be grouped by services and segregated according to circuit voltage and field designation. Where schematic diagrams show more than one wire to be connected to any wiring point, a sufficient number of terminals jumper together shall be provided to allow any one wire per terminal on the outgoing side of the terminal block. 20% spare terminals, suitably distributed shall be provided. Connections to terminal blocks shall be easily removable for testing purposes.

The cabinet shall be provided with two nos. suitably located grounding terminals to connect 4/0 AWG copper ground conductor. Each terminal shall comprise of two bolt drilling with M10 GI bolts and nuts to receive grounding connection. All non-current carrying metal parts shall be ended to a ground bus of copper.

6.8.10 PAINTING

6.8.10.1 Painting procedure: On completion of fabrication, all steel work shall undergo following process

a) Pre-treatment by seven tank process.
b) Under Coat and painting.

6.8.10.2 Pretreatment. by seven tank process: Heavy deposits of grease, oil and rust shall be removed manually.

- **Degreasing:** Surface cleaning to remove oil, grease, dirt and swerve from assemblies shall be done by either of following methods:
  a) Trichloroethylene cleaning as per.clause 7.120 of lS:6005 OR
  b) Alkaline cleaning as per clause 7.1.3 of lS-6005.
- **Derusting:** Rust may be present after degreasing owing to exposure' to corrosive conditions during manufacture. Scale may be present from operations during manufacture. It is therefore, necessary that rust be removed before application of phosphate treatment.
  Derusting shall be done by chemical treatment method as per clause no. 8.1.2 of IS-6005. Manufacturer may adopt either of the following methods:
  a) Sulfuric or hydrochloric acid pickling as per clause no. 8.1 .2.1 of IS.6005 OR
  a) Phosphoric acid pickling as .per IS·6005.
  b) Duplex sulfuric and phosphoric acid process as per clause no. 8.1 .2.3 of lS·6005

COPY RIGHT AND CONFIDENTIAL
THE INFORMATION ON THIS DOCUMENT IS THE PROPERTY OF BHARAT HEAVY ELECTRICALS LIMITED. IT MUST NOT BE USED DIRECTLY OR INDIRECTLY IN ANY WAY DETRIMENTAL TO THE INTEREST OF THE COMPANY.

- **Sand blasting** maybe done as per clause no 8.1 .1.2 of IS6005 instead of degreasing and de-rusting as given above. Procedure for sand blasting is as follows:
  a) Sand blasted surface shall be free of visible scale, rust, paint or foreign matter.
  b) The sand employed for blasting shall be from river bed, dry, hard and of a low breakdown rate and free from foreign matter. Preferred particle size of sand shall be 0.8 to 1.0 mm.
  c) The compressed air used for blasting shall be dry and clean.
  d) The surface, after completion of the cleaning operation shall be free from sand particles.
  e) Phosphate coaling shall be applied within 24 hours of blasting.
- **Phosphate treatment:**
  The phosphate treatment shall be carried out in such a manner that coating formation is proper as per Class C vide clause 3.1.4 of IS-6005. Proper attention shall be given to time of phosphating, solution temperature and composition for required coating formation. The coating weight shall be in accordance with IS-3618.
- **Rinsing and Chromate passivation:** Alia- phosphating, thorough rinsing with water is necessary in order to remove soluble salts which would otherwise tend to promote blistering under a paint film. Care should also be taken to ensure that the water supply itself is sufficiently free harmful salts. Then the components shall be used in hot dilute chromate solution as per clause no. 4.4.1 of lS·3618 under a temperature not below 60°C.
- **Undercoat and painting:**
  Manufacturer may adopt either wet painting in hard glass alkali based synthetic enamel or powder coating. Manufacturer shall submit detailed procedure before starting the job.

6.8.10.3 Finish: Structural steel and external panel surface shall be painted with baked enamel paint according to procedure approved by the customer. The finish exterior colour shall be LIGHT IVORY TO SHADE RAL:1015 SEMI GLOSSY KAPP UNIT-3 & RAPP Unit-7 of RAPP and LIGHT GREY TO SHADE RAL:7035 SEMI GLOSSY for KAPP Unit-4 & RAPP Unit-8. Interior paint shade will be brilliant white for all projects. Thickness of the finish paint shall be min of 25 microns. Composite film thickness (i.e. including all under coats) shall be 70 microns minimum. On inside surface shall be 40 microns min. Support members (brackets etc. used inside the panel as standard items of the manufacturing shall be finished with nickle plating wherever they are not painted. All the fasteners used like bolts, screws, nuts, plain washers etc. shall be finished to nickle plating. Hardware used on the front of panel shall be finished to nickel plating unless stated otherwise.

6.8.11 Equipment Identification

Name plates shall be provided on the door of the compartment of each set of equipment to identify the equipment obtained therein. Nameplates shall also be provided on the face of the panels or doors to identify all meters, relays etc. Tag or nameplate shall also be provided within the compartments to identify such individual equipment (which has an equipment number) such as relays etc. Name plates shall be held by self-tapping screws. The size of nameplates shall be approximately 20mm X 75mm for equipment and 40mm X 150mm for panels.

The identification shall consist of the official name of the equipment with the equipment number below the name. Wherever necessary, the labels shall be provided to describe the function of an item of equipment or to give warning against mal-operation. Attached to the exterior of the cabinet shall be nameplate as per approval of NPCIL.

COPY RIGHT AND CONFIDENTIAL
THE INFORMATION ON THIS DOCUMENT IS THE PROPERTY OF BHARAT HEAVY ELECTRICALS LIMITED. IT MUST NOT BE USED DIRECTLY OR INDIRECTLY IN ANY WAY DETRIMENTAL TO THE INTEREST OF THE COMPANY.

6.8.12 Mimic Diagram:
Mimic Diagram made of anodized aluminum or plastic material which can be easily cleaned shall be provided on the panel. It shall be fixed by screws.

6.9 Tropicalization: The supplier shall provide details of his intentions with regard to tropicalisation, including details of any special features for the following items:

- Transfonners
- Relays
- Wiring
- Terminals
- Rectifiers
- Controller Thyristor
- Contactors

6.10 EMC Testing: The 24V DC main battery charger shall be tested for Electromagnetic Compatibility as per PC-E-710 on "Electromagnetic compatibility qualification of C&I equipment".

7.0 INSPECTION TEST & REPORT
2.17.1 Quality Surveillance & Inspection:
The vendor shall allow access to the M/s NPCIL or his authorised representative at all reasonable time, during manufacture, assembly, testing and inspection to premises in which work is being carried out. The supplier shall provide all the testing and inspection services and facilities as required. Supplier's shop inspection shall be under the control of a competent Chief Inspector who primacy responsibility is inspection reporting directly to Management.
The inspection shall be carried out in a manner satisfactorily and shall be subject to approval by the Purchaser. A Quality Assurance Plan (QAP) is enclosed in Annexure to this specification. Vendor shall prepare QAP based on the QAP enclosed herewith and submit to purchaser for approval.
Manufacturer shall carry out all inspection and tests, apart from that all work covered by this specification shall be subject to quality surveillance by the NPCIL/BHEL or his authorized representative. Quality Surveillance by the Purchase or his authorized representative shall not relieve the supplier of the inspection duties called herein. In addition to the tests performed by the supplier, the purchaser shall have the right to ask for additional inspection or testing as deemed necessary and the additional cost of such tests will be borne by the NPCIL.
In the event of any failure to meet the inspection or test requirements specified herein, the supplier shall notify NPCIL/BHEL or their authorised representative. The supplier must obtain permission from the purchaser before repair is undertaken. If repairs, including redesign, are likely to affect the results of tests previously completed, appropriate re-inspection and re-testing shall be carried out .The quality control procedure to be followed to ensure a satisfactory repair shall be subject to approval by Purchaser.
The supplier shall provide NPCIL/BHEL or their representative with complete set of detailed drawing which will be used by them to assist in the inspection during construction of the equipments and which will be returned after the completion of the contract. Inspection shall not be limited to the end product only. Facilities shall be provided for inspection during various stages of manufacture and as agreed between the supplier and the purchaser.

COPY RIGHT AND CONFIDENTIAL
THE INFORMATION ON THIS DOCUMENT IS THE PROPERTY OF BHARAT HEAVY ELECTRICALS LIMITED. IT MUST NOT BE USED DIRECTLY OR INDIRECTLY IN ANY WAY DETRIMENTAL TO THE INTEREST OF THE COMPANY.

If there are changes in the components or design/type already type tested and design type offered against this specification, the purchaser reserves the right to demand repetition of tests without any extra cost before commencement of supply. The bidder shall bring out in his offer all such changes made in components, materials, design etc. as the case may be and likely affects of such changes on type qualification

8.0 TESTS

The supplier shall carryout tests to show that the equipment has been satisfactorily designed and manufactured and will perform to the standards required by this specification. If some tests mentioned cannot be carried out at supplier's works the same shall be carried out at site. In such a case, the supplier shall indicate the procedure of the test. If the equipment does not pass the test, it will be the supplier's responsibility to bring the equipment to the guaranteed figure or replace the faulty equipment at his cost. Any special equipment required for testing, like meters or relays, etc. if not available at purchaser's site office shall be supplied by the supplier.

8.1 Component Testing:

All semiconductors and other discrete components to be used in the DCPS shall be screened. These shall be procured from reputed manufacturer with certificate of compliance to recent relevant specifications. Component testing shall be done as pet MIL standard-883C. Active component like lCs, transistors, diodes shall be subjected to baking at maximum storage temperature for 24 hours. Then the component shall be subjected to temperature cycles between minimum storage temperature and maximum storage temperature for 10 cycles. Duration of each cycle shall be 15 minutes. Transition time from one cycle to another shall be 5 minutes. After the temperature cycling functional testing shall be done on 100% active component

Passive components like resistors, capacitors, relays, control transformer shall be subjected to baking and temperature cycling as above. However functional testing shall be done on sample basis for passive components. Details of the test to be conducted shall be listed in "Quality Assurance Plan" to be submitted by the vendor after award of contract. The components to be tested arc shown below. Suppliers shall lest all the components used and not necessarily only the components listed below.

List of Components to be tested:

(i)	Electrolytic Capacitors	(ii)	Diode
(iii)	Circuit Breaker	(iv)	Contactors
(v)	Switches	(vi)	Meters
(vii)	Control Transformers	(viii)	Fan Supply transformers
(ix)	Input transformers	(x)	DC filter choke
(xi)	PCBs	(xii)	Current transformers
(xiii)	Shunt	(xiv)	Temperature sensor
(xv)	Control cables	(xvi)	Power cables
(xvii)	DC filter assembly	(xviii)	Surge and lightning suppressors
(xix)	Rectifier assembly	(xx)	Fuses

8.2 Routine tests on system:

Following test shall be conducted on the complete DCPS as per IEC-146 wherever applicable. Five bound volumes containing copies of these test reports shall be submitted to the NPCIL. Shipping release will be issued only after receipt of three bound volume of test reports. Supplier shall keep a record for a period of five years after completing the job.

COPY RIGHT AND CONFIDENTIAL
THE INFORMATION ON THIS DOCUMENT IS THE PROPERTY OF BHARAT HEAVY ELECTRICALS LIMITED. IT MUST NOT BE USED DIRECTLY OR INDIRECTLY IN ANY WAY DETRIMENTAL TO THE INTEREST OF THE COMPANY.

1. Visual inspection for quality of workmanship, finish, dimensional checks &degree of protection.
2. Verification of compliance with approved drawings including checking of BOM & wiring.
3. Connection checking & overall dimension checking of modules, bins and panels.
4. All interlocks and sequence operation of circuits such as indications on front panel, alarms and trips shall be shown.
5. Voltage regulation of rectifier for input voltage variation at 415V (-) 10% / 415V (+) 10%.
6. Undershoot & overshoot voltage of rectifier output when 100% load is switched on & off.
7. Overload capability
8. Insulation resistance test.
9. High Voltage test
10. Input in-rush current measurement when DCPS is switched on at rated load.
11. Battery current limiting feature and V-I characteristics of the charger.
12. Test for diode voltage regulator operation
13. Short circuit capability test by connecting 100% load to DCPS & than short circuiting output.
14. Burn in test: DCPS shall be kept on load continuous for a period of 100 hours at nominal input voltage and full output load. Various functional tests mentioned above shall be carried out after burn in test. Burn in test and above functional test shall be conducted on all equipment.
15. Tests to prove functional requirements. Variation of voltages and current limit set values for all modes of charging and checking of accuracy for above settings.
16. Mechanical operation tests on switches, auxiliary electrical and mechanical devices.
17. Checking of equipment overall current limit operation.
18. Electrical control interlock and sequential operation tests
19. Insulation resistance test at 500V DC.
20. High Voltage test at 2000V AC RMS for one minute.
21. Functional tests on auxiliary devices.
22. Alternating current measurements on the input side in all phases at full load and no load including power factor, wave shape and harmonics injected to the system.
23. Measurement of losses and efficiency at full load, 50% and 25% of load rated input/output voltages.
24. Ripple content of DC output at maximum and minimum DC bus voltage and charging conditions under specified input voltage range.
25. All alarms and trips to be checked for satisfactory operation at various loads from zero to full load including specified over load.
26. Priority logic test on integrated set of DCPS for transfer of standby to main DCPS.
27. Noise Level test (max. 75 dB) at 1.5m distance from DCPS.
28. Efficiency of DCPS at full load and rated input / output voltages.
29. Voltage regulation of rectifier for input voltage variation at415V $\pm$ 10%
30. Ripple content of rectifier output at float voltage & boost voltage.
31. Undershoot and overshoot voltage of rectifier output when 100% load is switched on and 80% load switched off.
32. Battery charging test at boost voltage.
33. Power Factor measurement with 3 Phase PF meter at full load and at rated input voltage.

8.3 Special type test

8.3.1 Environmental Tests

Typical sub assemblies of one DCPS shall undergo environmental testing as mentioned below..

Dry heat test for PCB & sub assembly

Dry heat test as per IS-9000 Part III/Section: 3 test must be conducted at conditions mentioned:

Temperature: 55 + 2^{0}C

Relative Humidity: 50% at 35^{0}C

Duration: 4 hours.

COPY RIGHT AND CONFIDENTIAL
THE INFORMATION ON THIS DOCUMENT IS THE PROPERTY OF BHARAT HEAVY ELECTRICALS LIMITED. IT MUST NOT BE USED DIRECTLY OR INDIRECTLY IN ANY WAY DETRIMENTAL TO THE INTEREST OF THE COMPANY.

Damp heat test (cyclic) for PCB & sub assembly
Damp heat (cyclic) test as per IS-9000 Part V/ Section 2
Test must be conducted at the conditions mentioned below:
Upper Temperature: 40 + 2 ^{0}C
Relative Humidity : 90% (minimum)
Lower Temperature: 25 + 3 ^{0}C, 98% RH
Relative Humidity : 95% (minimum)
Each cycle is of 12 hours + 12 hours duration
Number of cycles: 2

8.3.2 Temperature rise test by connecting 100% load to DCPS and recording temperature rise by mounting sensors on transformers, choke, SCR heat sink and diode heat sink at 24V DC & 31.2V DC with doors closed.

8.3.3 EMC test
EMC test shall be conducted on one DCPS.
8.3.4 Preparation and submission of documentation~~ covering reliability analysis, stress analysis, identification of age related and non age related degraded components as per IEEE-650.~~
~~8.3.5 Performance of stress test as per IEEE-650.~~
8.3.6 Branch circuit MCB clearance test: The DCPS shall be loaded at rated load at the output. The DCPS shall be capable of isolating a short circuit in branch circuit through a MCB of 20A, 'C2' curve without tripping the DCPS.

8.4 Test Certificates
8.4.1 All routine and type test certificates including records, performance curves etc. shall be supplied according to the distribution schedule.
8.4.2 The Supplier shall ensure that instruments and gauges to be used for testing and inspection have rated calibration and the accuracy can be traced to National / International Standards.CPS shall be kept on load continuous for a period of 100 hours at nominal input voltage & full output load.

8.5 Tests to be carried out at site
The following tests shall be conducted at site on DCPS as per standards specified. These are however not intended to form a comprehensive commissioning check list as it shall be the Supplier's responsibility to draw up and carryout such a programme after obtaining the Purchaser's approval.
Following typical checks to be carried out at site:

8.5.1 Preliminary Checks
a. Check name plate details of all associated equipment according to specification.
b. Check for physical damage.
c. Check tightness of all bolts, clamps and connecting terminals.
d. Check cleanliness.
e. Check earthing.
f. Check for Lamps, Sockets etc.
g. Check for general layout.
h. Check provision of all protective relays, meters and transducers as per drawing.
i. Check for proper mounting of power devices like thyristors, Diodes etc. on heat sinks.

COPY RIGHT AND CONFIDENTIAL
THE INFORMATION ON THIS DOCUMENT IS THE PROPERTY OF BHARAT HEAVY ELECTRICALS LIMITED. IT MUST NOT BE USED DIRECTLY OR INDIRECTLY IN ANY WAY DETRIMENTAL TO THE INTEREST OF THE COMPANY.

8.5.2 Commissioning Checks

a. Each wire shall be traced by continuity tests and it should be made sure that the wiring is as per relevant drawings. All interconnection between panels / equipment shall be similarly checked.
b. All the wired terminals shall be meggered to earth.
c. Megger test between bus bars and bus bars to earth.
d. Settings of relays, MCCBs, other alarms tripping devices and interlocks as per scheme.
e. Functional checking of all control circuits including float, equalise and boost conditions, metering and relay circuits.
f. Insulation resistance test of all circuits.
g. Measurement of voltage regulation.
h. No load current and voltage (AC) and voltage and current (both AC. and DC.) at different loads.
i. Measurement of harmonics injected in to the system for different loading conditions.
j. Measurements of output voltage ripple contents.
k. Checking of battery current limit setting and verification of rectifier control circuitry under various conditions of operation.
l. Test for diode voltage regulator operation.
m. Priority logic test on integrated set of DCPS for transfer of standby to main DCPS.
n. All interlocks and sequence operation of circuits such as indications on front panel, alarms and trips shall be shown.
o. Functional tests on rectifiers control circuitry.

9.0 PACKING AND SHIPMENT:

The DCPS shall be so packed as not to suffer deterioration damage or breakage during shipment. Packing should be such that the ingress of moisture, dirt and other foreign material can be avoided. Packing method shall be adequate to withstand a period in transit for more two months and storage at site under tropical climate for minimum period of one year without suffering any damage or deterioration. Each package shall be properly labeled to indicate the type and quantity of material it contains, purchase order number, dimensions, weight and any other necessary data to identify the equipment and relate it to the contract. All bolts, nuts, plates, and other small parts shall be shipped in separate boxes. All projecting connections shall be adequately blocked and protected to prevent damage during shipment. The packing of panel may preferably be done using suitable thickness of plywood

10.0 INFORMATION REQUIRED WITH THE BID

The bidders shall submit all supporting information and technical data/drawings requested in this specification to permit the evaluating engineer to make a detailed comparison and evaluation of the tenders without the need of the request for further information from the bidder.

Bids which are not consisting of the essential information as mentioned below will not be considered.

1. Annexure-A gives the formats for submission of the technical bid. These annexure shall be filled in fully and shall make the essential part of the proposal of the bidders.
2. The bidder shall submit a brief list of work executed by him to standards and requirements specified in the tender document.
3. The supplier must state the mode of transportation whether by rail of by truck, and what measures will be taken to ensure that the equipment will not be damaged in transit.

COPY RIGHT AND CONFIDENTIAL

THE INFORMATION ON THIS DOCUMENT IS THE PROPERTY OF BHARAT HEAVY ELECTRICALS LIMITED. IT MUST NOT BE USED DIRECTLY OR INDIRECTLY IN ANY WAY DETRIMENTAL TO THE INTEREST OF THE COMPANY.

TECHNICAL SPECIFICATION OF DCDB

REVISION: 00

APPROVED

RAJASEKAR K

PREPARED	ISSUED	DATE
AMIT KR SHARMA	416	28 / 8 /15

COPY RIGHT AND CONFIDENTIAL
THE INFORMATION ON THIS DOCUMENT IS THE PROPERTY OF BHARAT HEAVY ELECTRICALS LIMITED. IT MUST NOT BE USED DIRECTLY OR INDIRECTLY IN ANY WAY DETRIMENTAL TO THE INTEREST OF THE COMPANY.

1.0 SCOPE

The scope of this specification covers the design, manufacture, testing, guarantee, supply, delivery and commissioning of DCDB.

2.0 CONTENTS : Requirements of this specification are resented under following section headings:

Description	Section
Applicable standards, specifications and drawings.	3
Materials and workmanship.	4
General functions and description.	5
Design requirements.	6
Inspection and reports	7
Tests	8
Packing and Shipment	9
Information required with the bid	10
Technical particulars required with the BID	Annexure – E
Quality Assurance Plan (Sample)	Annexure – F

3.0 APPLICABLE STANDARDS, SPECIFICATIONS AND DRAWINGS

All documents listed below constitute a part of this specification. In the event that certain requirements of specifications, drawings or data listed below conflict with the requirements of specification, the requirements of this specification shall govern.

3.1 Applicable Standards

IS-5578	Guide for marking of insulated conductors.
IS-8573	Digital DC voltmeters and DC electronic analogue to digital converters
IS/IEC-60898	Electrical Accessories - Circuit-Breakers for Over current Protection for Household and Similar Installations
IS-694	PVC Insulated cables for working voltages upto and including 1100 V
IS-1248	Direct acting electrical indicating instruments
IS-13703 IS-5553	HRC cartridge fuse links up to 650V Reactor
IS-2628	Rotary wafer switches
IS-8872 Part – 1	Non wire wound variable resistors (potentiometers)
IS-3156	Voltage transformers
IS-8909	Wire wound resistors
IS-3961	Recommended current ratings for cables
IS-4007	Terminals for electronic equipment
IS/IEC-60947-3	Heavy duty air break switches and composite units of air break switches and fuses for voltages not exceeding 1000V AC or 1500V DC.
IS-14901	Methods of measurement on semiconductor devices
IS-4540	Monocrystalline semiconductor assemblies and equipment
IS-5469	Code of practice for use of semiconductor function devices
IS/IEC-60947-1	General requirements for switchgear and control gear for voltage not exceeding 1000V.
IS/IEC-60947-2	Moulded case circuit breakers Relays Transistor Capacitor
IS-5051	Relay
IS-14901	Thyristors
IS-590	Capacitor
IS-5	Colours for Ready Mixed Paints and Enamels.

COPY RIGHT AND CONFIDENTIAL
THE INFORMATION ON THIS DOCUMENT IS THE PROPERTY OF BHARAT HEAVY ELECTRICALS LIMITED. IT MUST NOT BE USED DIRECTLY OR INDIRECTLY IN ANY WAY DETRIMENTAL TO THE INTEREST OF THE COMPANY.

IS-9000-Part-III	Basic environmental testing procedure for electronic and electrical items: Dry heat test.
IS-9000-Part-IV	Basic environmental testing procedure for electronic and electrical items: Damp heat (cyclic) test.
IS-4000	High strength bolts and steel structures.
IS-737	Wrought aluminum and aluminum alloy sheets and strips for general engineering purposes.
~~IEEE-344~~	~~Recommended practices for seismic qualification of Class 1E equipment for Nuclear Power Generating Stations.~~
MIL-STD-285	Attenuation measurements for enclosures, Electromagnetic shielding for electronic test purposes
IEEE-299	IEEE standard method for measuring the effectiveness of electromagnetic shielding enclosures.
IEC-61000-5-7-2001	Installation and mitigation guidelines- Degrees of protection provided by enclosures against electronic disturbances (EM code) (10KHz to 40GHz).

3.2 Applicable Specifications

~~PC-E-249~~	~~Technical specification for ground fault detection system.~~
~~PC-E-248~~	~~Technical specification for MCB status monitoring system.~~
~~PC-E-410~~	~~Technical specification for screw clamp type and screw less spring clamp type terminal blocks and accessories for non radiation area~~.
PP-E-2061	Specifications for requirements of components /equipment for instrumentation items.
PC-E-793	Guidelines for Derating of electronic components
PC-E-710	Engineering Standard for Electromagnetic Compatibility Qualification of C&I Equipment

5.0 GENERAL FUNCTION AND DESCRIPTION

5.1 Function of class I 24V DCDB panel is to distribute 24V DC to DDCMIS panels, to supply flasher power to indicating lamps, to detect the ground fault as well as to monitor the status of all Miniature Circuit Breakers (MCBs) mounted in these power supply distribution panels.

Technical requirements of MCB, Moulded Case Circuit Breaker (MCCB), handswitches, indicating meter and indicating lamps mounted in various MCPSD panels are given in section no. 6.6 of this specification.

~~Technical requirements of the ground fault detection system are covered in NPCIL specification no. PC-E-249.~~

~~Technical requirements of the MCB Status Monitoring System (MCB SMS) are covered in NPCIL specification no. PC-E-248.~~ Each panel shall house the Local Control Module (LCM) and auxiliary contact of each MCB shall be wired to LCM of MCB SMS. MCCPSD shall be able to work satisfactorily under the environmental conditions mentioned in earlier sections of charger.

5.2 Description of 24V DCDB Panels

24V DC Main buses shall be provided with green indicating lamps and shall be equipped with Earth Fault Sensor (EFS). Scanner shall be provided for monitoring the EFSs. Insulation monitoring device and Scanner shall be provided with common hand switch for temporary isolation. 24V DC buses should be equipped with 2 pole Moulded Case Circuit Breakers (MCCB) rated as per suitable charger rating (refer feeder list). Miniature circuit breakers (MCBs) of various ratings (as mentioned in feeder list) shall be mounted in DCDB panel. All the sub-buses (if any) shall be provided with “no voltage” relays. Contacts of these no voltage relays initiate no voltage alarm in control room thru DCS system.

COPY RIGHT AND CONFIDENTIAL
THE INFORMATION ON THIS DOCUMENT IS THE PROPERTY OF BHARAT HEAVY ELECTRICALS LIMITED. IT MUST NOT BE USED DIRECTLY OR INDIRECTLY IN ANY WAY DETRIMENTAL TO THE INTEREST OF THE COMPANY.

6.6 Equipment

6.6.1 Miniature Circuit Breakers

a. Sub-bus Miniature Circuit Breakers (MCB): 24V DC miniature circuit breakers shall be of 2 poles. They shall have one change over auxiliary contact rated for 0.5 A at 24V DC. These MCBs supply power to mixed loads such as relays, lamps and solenoid valves. Therefore, tripping characteristics shall be of medium delay (C characteristic). MCBs shall have breaking capacity of 1 KA. MCBs shall be fitted with mechanical „ON‟ and „OFF‟ indicators. MCB shall be generally as per IS/IEC-60898. Insulation resistance shall be more than 100 mega ohms at 500V DC.

b. Bus Circuit Breakers (CB): 24V DC moulded case circuit breakers (MCCB) shall be 2 pole without any auxiliary contact. Tripping characteristic shall be of medium delay („C‟ characteristic). MCCB shall have breaking capacity of 5 KA. CBs shall be fitted with mechanical „ON‟ and „OFF‟ indicators. MCCBs shall be generally as per IS/IEC-60947-2. Tripping characteristics of these bus MCCBs shall be coordinated such that the down stream MCBs shall trip upon occurrence of fault at down stream with out affecting these bus MCCBs. Also the up stream MCCBs shall be of higher rating to prevent them from tripping before these bus MCCBs trip. Insulation resistance shall be more than 100 mega ohms at 500V DC.

6.6.2 Hand Switches : Hand switches shall be 2 A rated at 24V DC.

6.6.3 Indicating Meters All meters shall be LED 7 segment digital type of size approximately 48 x 96 mm and shall be suitable for flush mounting. Zero adjustment shall be possible from front side. Meters for AC voltage, DC current measurement shall be 4 and ½ digits while meters for AC current and DC voltage shall be 3 and ½ digits. Accuracy of meters shall be 1% full scale or better. All voltage circuits of meters shall have fuses. Meters shall comply IS: 8573.

6.6.4 Indicating Lamps Indicating lamps shall be LED assemblies and of low voltage type. Series resistors / rectifiers for DC / AC may be fitted if required.

6.6.5 Bus Bars Bus bars shall be of electrolytic grade copper and shall have continuous current carrying capacity of suitable for charger rating specified in feeder list. Bus bars shall be rigidly braced to withstand the fault currents. Bus bar and link joints shall be made as per the latest modern practice. All joints as far as possible shall be bolted type. Supports used for the bus bars shall have adequate thickness and strength to withstand thermal, electrical and mechanical stresses during short circuits and they should be suitable for terminating cable of size as specified in feeder list. Bus bars for terminating incoming cables shall be placed horizontally. Marking and arrangement of bus bars shall conform to IS: 5578. Temperature at any point on the bus bar shall not exceed 85DegC during continuous operation at rated current at 45Deg C ambient.

6.6.6 Control Equipment

6.6.6.1 Semi-conductors: Refer charger specfication section cl 6.5.2

6.6.6.2 Control Fuses : All control fuses for the protection shall be slow blow type Category 1A long life grade suitable for 85Deg C operation.

6.6.6.3 Capacitors : Preferably all capacitors shall be tantalum.

6.6.6.4 Terminal Blocks: Terminal blocks shall be of Polyamide (nylon 6.6) and brass clamping yoke. Fire rating shall be V0 as per UL-94. Current bar shall be of copper alloy.

6.6.6.5 Resistors

All resistors shall be preferably metal oxide type and in general shall not be rated more than 50% of the manufacturer's rating. Potentiometer shall be used wherever wide range voltage and current adjustments are necessary.

COPY RIGHT AND CONFIDENTIAL
THE INFORMATION ON THIS DOCUMENT IS THE PROPERTY OF BHARAT HEAVY ELECTRICALS LIMITED. IT MUST NOT BE USED DIRECTLY OR INDIRECTLY IN ANY WAY DETRIMENTAL TO THE INTEREST OF THE COMPANY.

6.6.6.5 Resistors
All resistors shall be preferably metal oxide type and in general shall not be rated more than 50% of the manufacturer's rating. Potentiometer shall be used wherever wide range voltage and current adjustments are necessary.

6.6.6.6 Relays
All relays shall be compact, sealed to provide maximum reliability and shall be free from contact deterioration. Relays shall have 2 C/O contacts. The rating of contact for shall be 2 A. All relays shall be instantaneous and plug in type.

6.6.6.7 Monitor Points: Monitor points shall be provided for rapid fault finding.

6.6.7 Printed Circuit Boards: Refer charger specfication section cl 6.8.4.

6.6.8 Ground Fault Detection: ~~Ground fault detection shall be as per specification no. PC-E-249~~. The supplier shall mount the GFD system suitably on the panels, wire and integrate with main charger panels and ensure proper functions of the GFD system.

6.6.10.3 Housing and Foundation : In its proposed location, panel shall have access from its front as well as rear. Suitable gland plates of minimum 2.5 mm thickness shall be provided for cable entry. Cable entry shall be from bottom of the panel. Refer charger specification section 6.8.5

6.6.10.4 Compartment doors and barriers Barrier between compartments shall be designed such that it is not possible to accidentally touch live parts in adjacent compartment while working on equipment in a particular compartment. All doors shall be provided with good quality industrial locks and handles. Hinges shall be concealed type. Doors shall be provided with sponge gaskets for effective dust proofing. Doors shall open only 90 degree. All locks of doors of panels shall have a common key.

6.6.10.5 Enclosure ventilation and illumination Enclosure shall be natural cooled for heat dissipation. Refer charger specfication section cl 6.8.7

6.6.10.6 Cable supports and arrangements
Cable entry shall be from bottom. Suitable termination arrangements shall be provided including cable lugs and supports inside the CCPSD panels. The cable lugs shall be of the crimping type tinned copper. All internal power wiring shall have crimped lug termination. Mounting boards for various control circuits and sub assemblies shall be of adequate thickness to withstand electrical and mechanical stress and vibration.

6.6.10.7 Wiring and Terminations
a. Wire: All small wires shall be stranded copper conductor PTFE insulated, run in plastic wiring channel. Small wiring including instrument transformer secondary wiring shall be 2.5 sq. mm minimum and shall be supplied in accordance with specifications and rating of the charger. Wire size for electronic control shall suit the electronic components used. Wiring affected by stray electromagnetic fields shall be suitably shielded.
b. Terminal Blocks: Terminal blocks shall be screw type. Terminal blocks connected with MCBs of 6A and below shall be 4 sq. mm. TBs connected with 10A, 15A circuit breakers shall be 25 sq. mm. for circuit breakers of 25A and above terminals of 35 sq. mm size shall be provided to terminate the cables. For other control circuits 4 sq. mm TBs shall be used. TBs shall be suitably mounted to allow easy access. TBs shall be grouped by services and segregated according to circuit voltage and field destination. 20% spare terminals suitably distributed shall be provided. Connection to TBs shall be easily removable for testing purposes. TBs shall be mounted not less than 250mm below the top cover.

COPY RIGHT AND CONFIDENTIAL
THE INFORMATION ON THIS DOCUMENT IS THE PROPERTY OF BHARAT HEAVY ELECTRICALS LIMITED. IT MUST NOT BE USED DIRECTLY OR INDIRECTLY IN ANY WAY DETRIMENTAL TO THE INTEREST OF THE COMPANY.

c. Wiring and terminations: All wire terminations shall be made with ring torque compression type connectors which firmly grip the conductors and preferably insulated compressions sleeves to grip the wire insulation. Soldering of connections in electronic circuits shall be of the highest quality. While soldering adequate care shall be taken that electronic components are not damaged. Wiring between terminals of various devices shall be point to point (no wire splicing or 'T' connections) with wire trunked. It shall be so arranged that instruments or devices may be removed and / or serviced without unduly disturbing the wiring. Each wire shall be identified at both ends with wire nos. corresponding to the number shown on the supplier's drawings. Wire markers used shall be non-deterioration type. Wire shall be run away from all heat generating components. All control wiring shall be adequately segregated and protected from faults on the power circuits. Provisions shall be made for grounding voltage transformer neutrals if required.

6.6.10.8 Ground Bus Safety: Refer charger specification section 6.8.6

6.6.10.9 Painting Procedure, Equipment Identification: Refer charger specfication section 6.8.10

6.8 Tropicalization The supplier shall provide details of qualification with regard to tropicalisation of a. Wire b. Terminal blocks c. Circuit Breakers d. Miniature circuit breakers.

6.11.1 Supplier's Drawings Supplier shall forward preliminary drawings of the systems to the purchaser within 8 weeks from the time requisition is issued. These drawings shall include general arrangement, bill of materials, weights, outline dimensions, schematic and wiring diagrams. Following drawings for approval and /or information shall be submitted to the purchaser:

1. General arrangement drawing showing the locations of all equipment and dimensions of panels
2. Bill of material for approval
3. Foundation drawings of panels for approval.
4. Schematic drawings for approval
5. Spares list for approval
6. Name plate details for approval
7. Wiring diagrams for information and records.

Whereas following documents have to be sent to purchaser at appropriate stage of system execution.

1. Test procedure for approval
2. Test reports – 5 copies
3. Instruction manuals – 10 copies
4. Quality Assurance Plan (QAP) for approval

Five copies of history docket both hard copy and softcopy shall be furnished. History docket shall be made as per PRD-PROC-19. A sample history docket shall be submitted to the purchaser for clearance. Once purchaser clears the sample, 5 copies of history dockets shall be submitted both in hardcopy and softcopy form. Supplier, before commencing with fabrications shall prepare and submit to the purchaser for approval four complete sets of shop drawings which shall show the fabrication details. These drawings when approved in writing by the purchaser shall form part of this specification. After said drawings have been approved, the supplier shall furnish five additional complete sets of all final drawings, including all subsequent revisions approved by the purchaser in both hard & soft form.

6.11.2 Test Procedure Supplier shall submit test procedure for purchaser"s approval well in advance before starting testing. Equipment shall be tested as per approved test procedure.

COPY RIGHT AND CONFIDENTIAL
THE INFORMATION ON THIS DOCUMENT IS THE PROPERTY OF BHARAT HEAVY ELECTRICALS LIMITED. IT MUST NOT BE USED DIRECTLY OR INDIRECTLY IN ANY WAY DETRIMENTAL TO THE INTEREST OF THE COMPANY.

6.11.3 Sub-Contractors: Normally supplier shall not sub-contract any or all of the work involved in execution of the system. In exceptional cases, supplier shall take written permission from the Purchaser for sub-contracting. Supplier shall be responsible to the purchaser for all work of any sub-contractor allowed by the purchaser.

7.0 INSPECTION & REPORTS : Refer charger specification section 7.0

8.0 TESTS

The manufacturer shall carryout tests to show that the equipment has been satisfactorily designed and manufactured and performs to the standards required by this specification. If some tests mentioned cannot be carried out at supplier‟s works, the same shall be carried out at site. In such a case, the supplier shall indicate the procedure of the test. If the equipment does not pass the test, it shall be the supplier‟s responsibility at his cost. Any special equipment required for testing, like meters or relays, etc. if not available at purchaser's site office shall be supplied by the supplier.

8.1 Component Testing All components/equipment/sub-assemblies to be used in Main Control Centre Power Supply Distribution (MCCPSD) panels shall be subjected to visual, mechanical, electrical and functional tests. The test results shall be documented and submitted to customer QA engineer for review. Details of the tests to be conducted shall be listed in Quality Assurance Plan to be submitted by the supplier based on enclosed sample QAP after award of contract. The components to be tested are shown below. Supplier shall test all the components/equipment/sub-assemblies used and not necessarily only the components listed below.

List of Components to be tested

1. Indicating lamps
2. Circuit breakers
3. Hand switches
4. Fuses
5. Volt meters
6. Ammeters
7. Cables
8. PTFE wires
9. Miniature circuit breakers
10. Flasher circuit

10.1 Resistors

10.2 Capacitors

10.3Relays 10.4PCB 10.5Semiconductor components & ICs

11. Insulation Monitoring Device(IMD)
12. Scanner
13. Earth Fault Sensor(EFS)
14. MCB Status Central Processing and Display(MSCPD)
15. Local Control Module(LCM)
16. MCB Status Remote Display(MSRD)

8.2 Tests on complete system The following tests shall be conducted on the complete Main Control Centre Power Supply distribution (MCCPSD) panels:

COPY RIGHT AND CONFIDENTIAL
THE INFORMATION ON THIS DOCUMENT IS THE PROPERTY OF BHARAT HEAVY ELECTRICALS LIMITED. IT MUST NOT BE USED DIRECTLY OR INDIRECTLY IN ANY WAY DETRIMENTAL TO THE INTEREST OF THE COMPANY.

8.2.1 Routine Tests

1. Connection checking & overall dimension checking.
2. Insulation resistance test on complete panel.
3. High Voltage test on complete panel.
4. Indications & alarm function.
5. Operation of no voltage test.
~~6. Ground fault detection system as per specification no. PC-E-249.~~
~~7. MCB status monitoring system as per specification no. PC-E-248.~~
8. Flasher Unit as per NPCIL approved test procedure

8.2.2 Acceptance Test

8.2.2.1 Connection checking and overall dimension checking.
8.2.2.2 Insulation test on complete panel.
8.2.2.3 High voltage test on complete panel.
8.2.2.4 Indication & alarm contact function.
~~**8.2.2.5** Ground fault detection system as per specification no. PC-E-249~~
~~**8.2.2.6** MCB status monitoring system as per specification no. PC-E-248~~
8.2.2.7 Flasher Unit as per NPCIL approved test procedure.
8.2.2.8 Functional test on panels

8.2.3 Special type tests: Environmental Tests- Refer specification of charger section 8.3

8.2.4 Test Certificates 8.2.4.1 All routine and type test certificates including records, performance curves etc. shall be supplied according to the distribution schedule.
8.2.4.2 The Supplier shall ensure that instruments and gauges to be used for testing and inspection have rated calibration and the accuracy can be traced to National / International Standards.
8.2.5 Tests to be carried out at site The following tests shall be conducted at site on MCCPSD panels as per standards specified. These are however not intended to form a comprehensive commissioning check list as it shall be the Supplier's responsibility to draw up and carryout such a programme after obtaining the Purchaser's approval. Following typical checks to be carried out at site:

8.2.5.1 Preliminary Checks

a. Check name plate details of all associated equipment according to specification.
b. Check for physical damage.
c. Check tightness of all bolts, clamps and connecting terminals.
d. Check cleanliness.
e. Check earthing.
f. Check for Lamps, Sockets etc.
g. Check for general layout.
h. Check provision of all MCBs, MCCBs, relays, meters, GFD devices, MCB SMS devices etc. as per drawing.

8.2.5.2 Commissioning Checks

a. Each wire shall be traced by continuity tests and it should be made sure that the wiring is as per relevant drawings. All interconnection between panels / equipment shall be similarly checked.
b. All the wired terminals shall be meggered to earth. c. Megger test between bus bars and bus bars to earth. d. Settings of relays, MCBs, other alarms tripping devices and interlocks as per scheme. e. Functional checking of all control circuits including metering and relay circuits. f. Insulation resistance test of all circuits. g. Functioning of GFD and MCB SMS.

9.0 PACKING AND SHIPMENT: Refer charger specification section 9.0

COPY RIGHT AND CONFIDENTIAL

THE INFORMATION ON THIS DOCUMENT IS THE PROPERTY OF BHARAT HEAVY ELECTRICALS LIMITED. IT MUST NOT BE USED DIRECTLY OR INDIRECTLY IN ANY WAY DETRIMENTAL TO THE INTEREST OF THE COMPANY.

ANNEXURE-A

TECHNICAL COMPLIANCE SHEET FOR CHARGER TO BE FILLED BY PARTICIPATING VENDORS AND SUBMITTED ALONG WITH TECHNICAL BID

REVISION: 00

APPROVED

RAJASEKAR K

PREPARED	ISSUED	DATE
AMIT KR SHARMA	416	28 / 8 /15

ANNEXURE – A

TECHNICAL PARTICULARS REQUIRED WITH THE BID

1.0 TECHNICAL DATA TO BE SUPPLIED ALONGWITH THE TENDER

Bidders shall submit with their bids a complete description of all equipment on which their bid is based and such description shall include the details given hereunder. It is necessary that all details shall be completely filled in the first instance to evaluate the bid and compare it with other offers.

Bids with incomplete or ambiguous information shall not be considered.

The details hereunder shall be completed in all respects and reference to other places shall be avoided as far as possible.

All ratings indicated by the bidder shall be at specified ambient conditions.

1.1 Complete Equipment

1.1.1	Manufacturer‟s Name	----------	---------
1.1.2	Type reference	----------	---------
1.1.3	Nominal Ratings	----------	---------
1.1.3.1	Input voltage	----------	---------
1.1.3.2	Output voltage	----------	---------
1.1.3.3	Output current	----------	---------
1.1.4	Output DC Voltage Range	----------	---------
1.1.5	Output voltage regulation at 2.2V DC float & boost voltage at 2.4V DC per cell respectively.	----------	---------

1.1.5.1	Steady state	----------
1.1.5.2	Transient state variation for sudden application and removal of 100% load.	----------
1.1.6	Recovery time of voltage from transient condition to rated voltage	----------
1.1.7	Ripple content in DC output for full load at nominal input/output voltage with battery disconnected.	----------
1.1.8	Efficiency at full load and nominal input/output voltage	----------
1.1.9	Boost charging current limit adjustable range	Yes/No
1.1.10	Equalize charging current limit adjustable range	Yes/No
1.1.11	Is diode voltage regulator as Per section no. 6.2.1 provided?	----------
1.1.12	Harmonics injected into mains because of DCPS	----------
1.1.13	Power factor at the input of charger.	----------
1.1.14	Is cable entry from top?	----------
1.1.15	Weight of complete DCPS	----------
1.1.16	Overall size of DCPS	----------
	Width x depth x height (in mm)	----------

1.1.17 Ambient temperature and humidity at which DCPS can operate satisfactorily. ----------

1.1.18 Method of cooling Natural or Forced

1.1.19 a) Whether details of painting procedure and painting tests are enclosed? Yes/No

1.1.20 b) Colour of finish paint

Outside ----------

Inside ----------

1.1.21 Noise level of DCPS ----------

1.1.22 Short time current withstand rating at D.C. output. ----------

1.1.23 Standard power frequency insulation withstand for one minute. ----------

1.1.24a) Mean time between failure of Complete equipment. ----------

b) Device having lowest MTBF. ----------

1.1.25 Earth Bar

Is it made of copper and 150 Sq. mm? Yes/No

1.1.26 Can the electronic components be subjected to burn in test before use? Yes/No

1.1.27	Is the equipment fully Tropicalized?	Yes/No
1.1.28	Do all equipment used Independently support Combustion.	---------
1.1.29	Is mimic diagram provided?	---------
1.1.30	Over load capacity.	----------

1.2 Housing

1.2.1	Thickness of sheet steel.	-----MM
1.2.2	Is sheet steel cold rolled ?	Yes/No
1.2.3	Are ventilation louvers provided?	Yes/No
1.2.4	Are ventilation louvers screened?	Yes/No
1.2.5	Is the enclosure rigid, free floor standing?	Yes/No
1.2.6	Are non magnetic flanges for input AC cable entry provided?	Yes/No
1.2.7	IP Number of the housing as per IS:60947.	----------

1.3 List of recommended spares for five years operation.

1.4 Tests

1.4.1 Tests mentioned in section 8.0 will be Performed including EMC testing. Yes/No

1.4.2.1 By testing only? Yes/No

1.4.2.2 Where will seismic testing be conducted? ----------

1.4.3 ~~Whether DCPS qualified as per IEEE-650~~ ~~Yes/No~~

1.4.4 Which tests are proposed to be done at site? (List the number given in Specification)

1.5 List of deviations enclosed. Yes/No

1.6 Schematic diagram of DCPS enclosed. Yes/No

1.7 Delivery schedule

Schedule in weeks after placement of orders:

1.7.1 Submission of drawings, QA plan, test : procedures

1.7.2 Time allowed for approval by purchaser:

1.7.3 Complete fabrication of first 24V DCPS :

1.7.4 Schedule for completion of routine tests:

1.7.5 Schedule for completion of special type: tests

1.7.6 Production schedule of balance 24V DCPS:

1.7.7 Schedule for inspection, testing and delivery at site of all equipment for first unit. :

1.7.8 Schedule for manufacture, inspection, testing and delivery at site of all equipment for second unit. :

1.7.9 Time required for erection of all equipment and keeping ready for commissioning :

1.7.10 Time required for conducting site test :

2.0 TENDER DRAWINGS

The Bidder shall list the tender drawings which are being submitted along with the bid. A general arrangement drawing showing main equipment layout, general features, overall dimensions, wiring arrangement etc, must accompany the bid.

3.0 TIME REQUIRED BY SUPPLIER

The supplier must state the period required for the preparation of drawings and the time he has allowed for approval of the drawings by the purchaser in the delivery period specified.

4.0 TRANSPORTATION

The supplier must state the mode of transportation whether by rail of by truck, and what measures will be taken to ensure that the equipment will not be damaged in transit.

5.0 PROOF OF ABILITY

The bidder shall submit a brief list of work executed by him to standards and requirements specified in the tender document.

6.0 DEVIATIONS FROM SPECIFICATIONS

Any deviations in test procedure from this specification.

Any deviation in items offered.

COPY RIGHT AND CONFIDENTIAL

THE INFORMATION ON THIS DOCUMENT IS THE PROPERTY OF BHARAT HEAVY ELECTRICALS LIMITED. IT MUST NOT BE USED DIRECTLY OR INDIRECTLY IN ANY WAY DETRIMENTAL TO THE INTEREST OF THE COMPANY.

ANNEXURE-B

QAP FOR CHARGER

(The QAP is subject to approval)

REVISION: 00

APPROVED		
RAJASEKAR K		
PREPARED	ISSUED	DATE
AMIT KR SHARMA	416	28 / 8 /15

ANNEXURE - B

QUALITY ASSURANCE PLAN FOR 24V DC MAIN BATTERY CHARGERS (SAMPLE)

Sl. No	Components and Operations	Characteristics	Class	TYPE OF CHECK	QUANTUM OF CHECK	REFERENCE DOCUMENT	ACCEPTANCE NORMS	FORMAT OF RECORDS	AGENCY			REMARKS
									P	W	V	
1.	Component Screening	Visual Burn-in Test Electrical Test Functional Test	C C C C	Verification Operational Measurement Performance	Sample Sample Sample Sample	NPCIL spec. PC-E-251	NPCIL spec. PC-E-251	TC	2	2	1	
2.	Power Transformer	Dimensions Voltage ratio Impedance voltage and load loss No load current & loss Insulation resistance Dielectric strength Temp. rise Double freq. Double voltage withstand test	B B C C C C C C	Measurement Measurement Measurement Measurement Measurement Measurement Measurement Measurement	100% 100% 100% 100% 100% 100% Sample Sample	IS-11171	IS-11171 Class of insulation as per NPCIL spec.	TR	2	2,1	1	CHP
3.	Series Reactor	Dimension Inductance value Insulation resistance Dielectric strength Temp. rise Double freq. Double voltage withstand test	B B C C C C	Measurement Measurement Measurement Performance Measurement Performance	Sample Sample Sample Sample Sample Sample	IS-5553	IS-5553	TR	2	2	1	
4.	Control Transformer / Pulse Transformer	Dimension Terminal Marking & Polarity Voltage ratio No load current Insulation resistance Dielectric strength	B B C C C C C	Measurement Verification Measurement Measurement Measurement Measurement Performance	Sample Sample Sample Sample Sample Sample Sample	IS-3156	IS-3156	TC	2	2	1	

QUALITY ASSURANCE PLAN FOR 24V DC MAIN BATTERY CHARGERS (SAMPLE)

Sl. No	Components and Operations	Characteristics	Class	TYPE OF CHECK	QUANTUM OF CHECK	REFERENCE DOCUMENT	ACCEPTANCE NORMS	FORMAT OF RECORDS	AGENCY			REMARKS
									P	W	V	
5.	Contactors	Visual	A	Verification	Sample	IS-60947	IS-60947	TC	2	2	1	
		Dimensions	B	Measurement	Sample	Manufacturer"s						
		Operation	C	Performance	Sample	catalogue						
		(pick up /dropout)										
		Type no/Marking	C	Verification	Sample							
		Insulation resistance	C	Measurement	Sample							
		Dielectric strength	C	Measurement	Sample							
6.	Moulded Case Circuit Breaker/ MCB	Visual	A	Verification	Sample	Manufacturer"s	IS-2516	TC	2	2	1	
		Dimension	B	Measurement	Sample	Spec.	IS-60898					
		Operation	B	Performance	Sample	IS-2516						
		Type no./Marking	C	Verification	Sample	IS-60898						
		Tripping characteristics	C	Measurement	Sample							
		Insulation resistance	C	Measurement	Sample							
		Dielectric strength	C	Performance	Sample							
7.	Fuses	Dimension	A	Measurement	Sample	Manufacturer"s	IS-13703	TC	2	2	1	
		Type no./Marking	C	Verification	Sample	Spec.						
		Continuity	C	Verification	Sample							
8.	Fuse holders	Visual	A	Verification	Sample	Manufacturer"s	Manufacturer"s	TC	2	2	1	
		Dimension	A	Measurement	Sample	Spec.	spec.					
		Type no./marking	C	Verification	Sample							
		Insulation resistance	C	Measurement	Sample							
		Dielectric strength	C	Performance	Sample							
9.	Switches (slelect or/push button)	Visual	B	Measurement	Sample	Manufacturer"s	IS-6975	TC	2	2	1	
		Dimension	C	Verification	Sample	Spec.	IS-4794					
		Operation	C	Performance	Sample	IS-6975						
		Type no./marking	C	Verification	Sample	IS-4794						
		Insulation resistance	C	Measurement	Sample							
		Dielectric strength	C	Performance	Sample							

QUALITY ASSURANCE PLAN FOR 24V DC MAIN BATTERY CHARGERS (SAMPLE)

Sl. No	Components and Operations	Characteristics	Class	TYPE OF CHECK	QUANTUM OF CHECK	REFERENCE DOCUMENT	ACCEPTANCE NORMS	FORMAT OF RECORDS	AGENCY			REMARKS
									P	W	V	
10.	Printed Circuit Board	Dimension	B	Measurement	100%	PP-E-1443	PP-E-1443	TC	2	2	1	
		Continuity	C	Verification	100%							
		Solderability	C	Verification	Sample							
		Insulation resistance	C	Measurement	Sample							
		Dielectric strength	C	Performance	Sample							
		Peel strength	C	Measurement	Sample							
11.	Meters	Visual	A	Verification	Sample	Manufacturer"s Spec. IS-1248 / IS-8573	IS-1248 / IS-8573	TC	2	2	1	
		Dimension	B	Measurement	Sample							
		Type no./marking	C	Verification	Sample							
		Accuracy	C	Measurement	Sample							
		Insulation resistance	C	Measurement	Sample							
12.	Current Transformer	Dimension	B	Measurement	Sample	Manufacturer"s Spec. IS-2705	IS-2705	TC	2	2	1	
		Terminal	B	Verification	Sample							
		Marking & polarity										
		Turns ratio	C	Measurement	Sample							
		Insulation resistance	C	Measurement	Sample							
		Dielectric strength	C	Performance	Sample							
13.	Relays	Dimension	B	Measurement	Sample	Manufacturer"s Catalogue IS-5051	IS-5051	TC	2	2	1	
		Coil	B	Measurement	Sample							
		Resistance										
		Operating voltages	C	Measurement	Sample							
		Insulation resistance	C	Measurement	Sample							
		Dielectric strength	C	Performance	Sample							
		Solderability	C	Performance	Sample							
14.	Transistors	Dimension	B	Measurement	Sample	Manufacturer"s spec. IS-14901	IS-14901	TC	2	2	1	
		Type No./Marking	B	Verification	Sample							
		Solderability	C	Verification	Sample							
		Breakdown voltage Vceo	C	Measurement	Sample							
		Amplification factor	C	Measurement	Sample							
		Collector leakage current	C	Measurement	Sample							
		Resistance to solvent	C	Verification	Sample							

QUALITY ASSURANCE PLAN FOR 24V DC MAIN BATTERY CHARGERS (SAMPLE)

Sl. No	Components and Operations	Characteristics	Class	TYPE OF CHECK	QUANTUM OF CHECK	REFERENCE DOCUMENT	ACCEPTANCE NORMS	FORMAT OF RECORDS	AGENCY			REMARKS
									P	W	V	
15.	Voltage reference diodes	Dimension Type no./marking Breakdown voltage Leakage current Burn-in Test for 48 hrs. Resistance to solvent	B B C C C C	Measurement Verification Measurement Measurement Performance Performance	Sample 100% 100% 100% 100% Sample	Manufacturer"s Spec. IS-14901 Part-3	IS-14901 Part-3	TC	2	2	1	
16.	Signal diodes	Dimension Type No./marking Reverse leakage current Solderability	B B C C	Measurement Verification Measurement Performance	Sample 100% 100% Sample	Manufacturer"s spec. IS-14901	IS-14901	TC	2	2	1	
17.	Power Diodes	Visual Dimension Type No./marking Reverse leakage current	A B B C	Verification Measurement Verification Measurement	100% Sample 100% 100%	Manufacturer"s Catalogue IS-3895	IS-3895	TC	2	2	1	
18.	Low Power resistors	Visual Resistance value Solderability	A C C	Verification Measurement Verification	Sample 100% Sample	IS-5786 Part I-XI	IS-5786 Part I-XI	TC	2	2	1	
19.	Power resistors	Visual Type no./Marking Dimension Resistance value Insulation resistance Dielectric strength	A B B C C C	Verification Verification Measurement Measurement Measurement Performance	100% 100% Sample 100% Sample Sample	IS-5786 IS-8872	IS-5786 IS-8872	TC	2	2	1	

ANNEXURE - B

QUALITY ASSURANCE PLAN FOR 24V DC MAIN BATTERY CHARGERS (SAMPLE)

Sl. No	Components and Operations	Characteristics	Class	TYPE OF CHECK	QUANTUM OF CHECK	REFERENCE DOCUMENT	ACCEPTANCE NORMS	FORMAT OF RECORDS	AGENCY			REMARKS
									P	W	V	
20.	ICs a) Linear	Visual Type No./marking Functional	B B C	Measurement Verification Performance	Sample Sample Sample	Manufacturer"s Spec. IS-14901 Part-3	IS-14901 Part-3	TC	2	2	1	
	b) Digital	Visual Type No./marking Functional	A B C	Verification Verification Performance	Sample Sample Sample							
21.	Electrolyte capacitors a) for PCBS	Visual Type No./marking Dimension Capacitance value Leakage current	A B B C C	Verification Verification Measurement Measurement Measurement	100% 100% Sample 100% Sample	Manufacturer"s Spec. IS-4317	IS-4317	TC	2	2	1	
	b) DC Filter	Visual Type No./Marking Leakage current Insulation resistance Dielectric strength	A B C C C	Verification Verification Measurement Measurement Measurement	100% 100% 100% Sample Sample							

ANNEXURE - B

QUALITY ASSURANCE PLAN FOR 24V DC MAIN BATTERY CHARGERS (SAMPLE)

Sl. No	Components and Operations	Characteristics	Class	TYPE OF CHECK	QUANTUM OF CHECK	REFERENCE DOCUMENT	ACCEPTANCE NORMS	FORMAT OF RECORDS	AGENCY			REMARKS
									P	W	V	
22.	Ceramic disc capacitor/ mettalised polyester capacitor/ tantalum capacitors	Visual Type No./marking Dimension Capacitance value	A B B C	Verification Verification Measurement Measurement	100% 100% Sample 100%	Manufacturer"s Spec. JSS-50203/ JSS-50204 JSS-50205	JSS-50206/ JSS-50204 JSS-50205	TC	2	2	1	
23.	Lamination	Dimension Stacking factor Surface insulation	C B C	Measurement Verification Verification	Sample 100% Sample	IS-11794	IS-11794	TC	2	2	1	
24.	PVC insulated copper wire	Visual Dimension Insulation resistance Dielectric strength	A C C C	Verification Measurement Measurement Performance	100% 100% 100% Sample	IS-694	IS-694	TC	2	2	1	
25.	Thyristors / Power Transistors	Visual Type No./Marking Triggering leakage	A B C C	Measurement Verification Performance Measurement	Sample 100% 100% 100%	Manufacturer"s spec. IS-7788 IEC-146	IS-7788 IEC-146	TC	2	2	1	
26.	Electrical (wiring)	Routing of wires Bunching, Ferruling, Crimping, soldering, Clearance and colour coding	B B	Visual Visual	100% 100%	Manufacturer"s spec.	Manufacturer"s spec.	TC	2	2	1	

ANNEXURE - B

QUALITY ASSURANCE PLAN FOR 24V DC MAIN BATTERY CHARGERS (SAMPLE)

Sl. No	Components and Operations	Characteristics	Class	TYPE OF CHECK	QUANTUM OF CHECK	REFERENCE DOCUMENT	ACCEPTANCE NORMS	FORMAT OF RECORDS	AGENCY			REMARKS
									P	W	V	
27.	Painting	Pretreatment check	C	Process		PC-E-251	PC-E-251	TR	2	2,1	1	CHP To be conducted on test coupon
		Scratch hardness check	B	Physical	Clause no. 3.0 of IS-101	IS-101	IS-101	↓	↓	↓	↓	
		Bend (flexibility) Test	B	Mechanical	Clause no. 2.0 of IS-101	IS-101	IS-101					
		Pull of Adhesion test	B	Physical	Clause no. 5.0 of IS-101	IS-101	IS-101					
		Painting thickness check	B	Measurement		PC-E-251	PC-E-251					
28.	Sub Assembly	Dimension	B	Measurement	Sample	Manufacturer"s drawings	Manufacturer"s drawings	TC	2	2	1	
		Component verification	B	Comparison	Sample			↓	↓	↓	↓	
		Layout verification	B	Comparison	Sample							
		Wiring check	C	Continuity	Sample							
		Insulation resistance	C	Measurement	Sample							
		Dielectric strength	C	Performance	Sample							
29.	Final Assembly and pre testing	Dimension	B	Measurement	100%	Manufacturer"s drawings	Manufacturer"s drawings	TC	2	2	1	
		Component verification	B	Comparison	100%			↓	↓	↓	↓	
		Layout verification	B	Comparison	100%							
		Wiring check	C	Continuity	100%							
		Cable identification	B	Comparison	100%							
		Insulation resistance	C	Measurement	100%							
		Dielectric strength	C	Performance	100%							
30.	Final testing (a) Physical Verification	Presence of all items as per Bill Of Material (BOM)	B	Visual	100%	Manufacturer"s drawings	Manufacturer"s drawings	TC	2	2	1	
								↓	↓	↓	↓	

ANNEXURE - B

QUALITY ASSURANCE PLAN FOR 24V DC MAIN BATTERY CHARGERS (SAMPLE)

Sl. No	Components and Operations	Characteristics	Class	TYPE OF CHECK	QUANTUM OF CHECK	REFERENCE DOCUMENT	ACCEPTANCE NORMS	FORMAT OF RECORDS	AGENCY			REMARKS
									P	W	V	
31.	Performance test	Dimension	C	Measurement	100%	As per approved test procedure	As per approved test procedure	TR	2	2,1	1	CHP
		Connection checking	B	Performance	100%							
		High voltage test	B	Performance	100%							
		Alarm and indication	B	Performance	100%							
		Efficiency test	C	Measurement	100%							
		Voltage regulation of rectifier	C	Measurement	100%							
		Ripple content of rectifier	C	Measurement	100%							
		Undershoot and overshoot of rectifier output	B	Measurement	100%							
		Input inrush current measurement test	C	Measurement	100%							
		Dry heat test for PCBs	C	Performance	One no. each type							
		Damp heat test for PCBs	C	Performance								
		Short circuit capability	C	Performance	100%							
		Temperature rise test	C	Performance	One DCPS							
		Diode Voltage Regulator operation test	C	Performance	100%							

ANNEXURE - B

QUALITY ASSURANCE PLAN FOR 24V DC MAIN BATTERY CHARGERS (SAMPLE)

Sl. No	Components and Operations	Characteristics	Class	TYPE OF CHECK	QUANTUM OF CHECK	REFERENCE DOCUMENT	ACCEPTANCE NORMS	FORMAT OF RECORDS	AGENCY			REMARKS
									P	W	V	
		Burn-in test	C	Performance	100%	As per approved test procedure	As per approved test procedure	TR	2	2,1	1	CHP
		~~Qualification as per IEEE-~~ 650	~~C~~	~~Performance~~	~~One DCPS~~				~~3~~			
		EMC test	C	Performance	One DCPS				3			
		Battery charging test at boost voltage	C	Performance	100%				2			
		Battery charging test at equalize voltage	C	Performance	100%							
	Insulation test (a) between I/P and Earth (b) between O/P and Earth (c) Between I/P and O/P	Insulation resistance value	B	Performance Measurement at 2000 V DC after one minute	100%	As per design document	More than 5 megohm.					

LEGEND:

P	:	Performed by	A	:	Minor	1.	:	Purchaser
W	:	Witnessed by	B	:	Major	2.	:	Prime Supplier
V	:	Verified by	C	:	Critical	3.	:	External Laboratory
			TC	:	Test Certificate			
			TR	:	Test Report			
			CHP	:	Customer Hold Point			

COPY RIGHT AND CONFIDENTIAL

THE INFORMATION ON THIS DOCUMENT IS THE PROPERTY OF BHARAT HEAVY ELECTRICALS LIMITED. IT MUST NOT BE USED DIRECTLY OR INDIRECTLY IN ANY WAY DETRIMENTAL TO THE INTEREST OF THE COMPANY.

ANNEXURE-C

LIST OF ALARMS AND INDICATORS

REVISION: 00

APPROVED

RAJASEKAR K

PREPARED	ISSUED	DATE
AMIT KR SHARMA	416	28 / 8 /15

DETAILS OF ALARM AND INDICATIONS

Sl. No.	Alarm description	Potential Free Contact required	LED indication required	Input CB status	Output CB status	Main DCPS contactor status	Standby DCPS contactor status	Applicability	Remarks
1	24V DC Load on standby DCPS	YES	YES	ON	ON	ON	ON	DCPS-1,2,3,5,6	Alarm & trip
2	24V DC Low Battery for DCPS	YES	YES	ON	ON	OFF	OFF	ALL DCPS	Alarm
3	24V DCPS voltage trouble	YES	YES	ON (OFF during DC overvoltage trip)	ON	OFF	ON	ALL DCPS	Alarm & trip
4	24V DCPS Battery CB open	YES	YES	ON	ON	ON	OFF	DCPS-1,2,3,5,6	Alarm
5	24V DCPS input voltage high	YES	YES	ON	ON	ON	OFF	ALL DCPS	Alarm
6	24V DCPS input current high	YES	YES	ON	ON	ON	OFF	ALL DCPS	Alarm
7	Mains failure	YES	YES	ON	ON	OFF	ON	ALL DCPS	Alarm & trip

Sl. No.	Alarm description	Potential Free Contact required	LED indication required	Input CB status	Output CB status	Main DCPS contactor status	Standby DCPS contactor status	Applicability	Remarks
8	Control power supply failure	YES	YES	ON	ON	OFF	ON	ALL DCPS	Alarm & trip
9	24V DCPS Output voltage Low	YES	YES	ON	ON	OFF	ON	ALL DCPS	Alarm & trip
10	24V DCPS output overload	YES	YES	ON	ON	ON	OFF	ALL DCPS	Alarm & trip
11	Battery charging current high	YES	YES	ON	ON	ON	OFF	ALL DCPS	Alarm
12	Equipment over temperature	YES	YES	ON	ON	ON	OFF	ALL DCPS	Alarm
13	Battery on load	YES	YES	ON	ON	OFF	OFF	DCPS-1,2,3,5,6	Alarm
14	Standby not available	YES	YES	ON	ON	ON	OFF	DCPS-1,2,3,5,6	Alarm
15	Rectifier Fuse failure	YES	YES	ON	ON	ON	OFF	ALL DCPS	Alarm
16	Capacitor fuse failure	YES	YES	ON	ON	ON	OFF	ALL DCPS	Alarm
17	Fan failure	YES	YES	ON	ON	ON	OFF	ALL DCPS	Alarm
18	Output CB tripped	YES	YES	ON	OFF	OFF	ON	ALL DCPS	Alarm & trip
19	DC over voltage	YES	YES	OFF	ON	OFF	ON	ALL DCPS	Alarm & trip

COPY RIGHT AND CONFIDENTIAL

THE INFORMATION ON THIS DOCUMENT IS THE PROPERTY OF BHARAT HEAVY ELECTRICALS LIMITED. IT MUST NOT BE USED DIRECTLY OR INDIRECTLY IN ANY WAY DETRIMENTAL TO THE INTEREST OF THE COMPANY.

ANNEXURE-D

BLOCK DIAGRAM OF CHARGER

REVISION: 00

APPROVED		
RAJASEKAR K		
PREPARED	ISSUED	DATE
AMIT KR SHARMA	416	29 / 8 /15

WIRE NO. PREFIX	WIRE NO. ALLOTED	WIRE NO. USED	SPARE
5720	0001 TO 0100	0001 TO 0020	0021 TO 0100

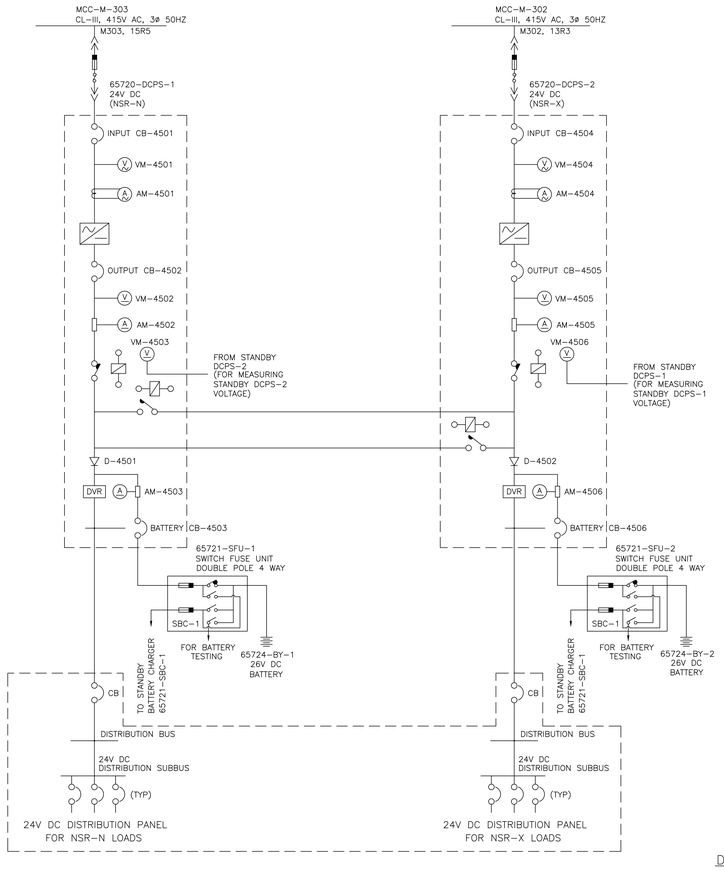

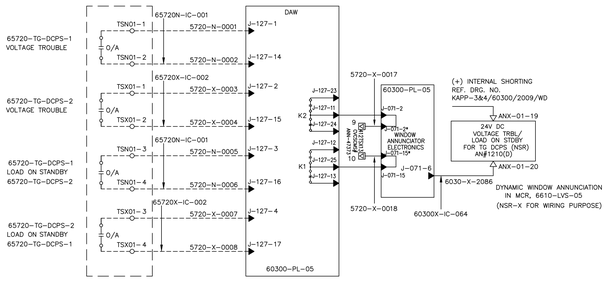

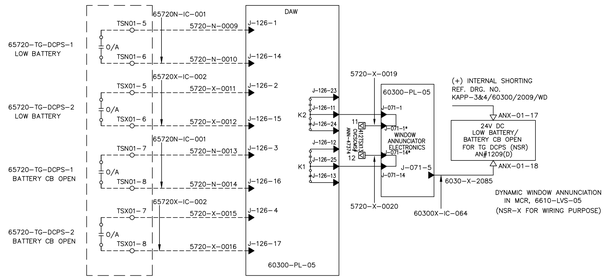

LEGEND :-

- MAIN CONTROL ROOM PANEL TERMINAL
- CONTROL EQUIPMENT ROOM TERMINAL
- FIELD TERMINAL
- CBS PANEL TERMINAL (NON SAFETY)
- SWITCH FUSE ASSEMBLY DRAW OUT TYPE
- RECTIFIER
- CIRCUIT BRAKER
- CONTACTOR
- AC AMMETER WITH CT
- AC VOLTMETER
- DC AMMETER WITH SHUNT
- DC VOLTMETER

CVCSCMS – CONTAINMENT VENTILATION AND COMMON SERVICES CONTROL MONITORING SYSTEM
SFU – SWITCH FUSE UNIT
SR – SAFETY RELATED
I/O – INPUT/OUTPUT
BY – BATTERY
SBC – STANDBY BATTERY CHARGER
DCPS – DC POWER SUPPLY
HS – HAND SWITCH
D – DIODE
MCC – MOTOR CONTROL CENTRE
BU – BUS
CH – CHANNEL
AH – AMPERE HOUR
MCR – MAIN CONTROL ROOM
DAW – DYNAMIC ANNUNCIATION WINDOW
CB – CIRCUIT BREAKER
VM – VOLTMETER
AM – AMMETER
DVR – DIODE VOLTAGE REGULATOR
OWS – OPERATOR WORK STATION
MIM – MULIPURPOSE INTELLIGENT MODULE

GENERAL NOTES:-

1) ALL EQUIPMENT NOS. SHALL BE PREFIXED BY 65720 UNLESS STATED OTHERWISE.
2) ALL ANNUNCIATION ARE OPEN TO ALARM UNLESS STATED OTHERWISE.
3) DCPS-1&2 ARE CAPABLE OF SUPPLYING 24V DC, A TG SYSTEM FOR NSR-N AND NSR-X LOAD RESPECTIVELY.
4) THE SUPPLIER'S SCOPE IN REGARD TO DCPS, SBC AND DISTRIBUTION PANEL ARE SHOWN IN BROKEN LINE.
5) ALL CIRCUIT BREAKERS & CONTACTORS SHOWN IN THIS DRAWING SHALL BE DOUBLE POLE.
6) 65721-SBC-1 IS LOCATED IN TURBINE BUILDING.
7) 65721-SFU-1&2 AND 65724-BY-1&2 ARE LOCATED IN TURBINE BUILDING.
8) DOUBLE POLE SWITCH FUSE UNITS SHALL BE AS GIVEN BELOW (FOR 65721-SFU-1,2)

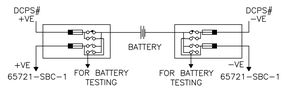

9) 66604-PL-12 IS LOCATED IN CER, CB-111 M. EL.
10) 60300-PL-05 IS LOCATED IN CER, CB-111 M. EL.
11) 6610-LVS-5 IS LOCATED IN MCR, CB-111 M. EL.
12) TERMINALS WITH (*) INDICATE DUMMY TERMINAL.

DIGITAL SIGNAL TO OWS THROUGH ETHERNET/FIBRE OPTIC :

SR. NO.	EQUIPMENT	OWS NO.	FAULT	DISCRIPTION	STATUS
1.	65720-DCPS-1	OWS # ANN-47353	24V TG DCPS TROUBLE	RECTIFIER FUSE FAILURE; CAPACITOR FUSE FAILURE; OUTPUT CB TRIPPED; BATTERY CHARGING CURRENT HIGH; BATTERY ON LOAD; MAINS FAILURE; OUTPUT OVERLOAD; EQUIPTMENT OVER TEMP.; CONTROL POWER SUPPLY FAILURE; OVERLOAD TRIP; DC OVER VOLTAGE; FAN FAILURE; INPUT VOLTAGE HIGH; INPUT CURRENT HIGH; OUTPUT VOLTAGE LOW; STAND BY NOT AVALIABLE	OK/TROUBLE
		OWS # ANN-47354	LOAD ON STAND BY	24V TG DCPS LOAD ON STAND BY (NSR-N)	OK/TROUBLE
		OWS # ANN-47355	BATTERY CB OPEN	24V TG DCPS BATTERY CB OPEN (NSR-N)	OPEN/CLOSE
		OWS # ANN-47356	LOW BATTERY	24V TG DCPS LOW BATTERY (NSR-N)	LOW/NORMAL
		OWS # ANN-47357	VOLTAGE TROUBLE	24V TG DCPS VOLTAGE TROUBLE (NSR-N)	OK/TROUBLE
2.	65720-DCPS-2	OWS # ANN-47358	24V TG DCPS TROUBLE	RECTIFIER FUSE FAILURE; CAPACITOR FUSE FAILURE; OUTPUT CB TRIPPED; BATTERY CHARGING CURRENT HIGH; BATTERY ON LOAD; MAIN FAILURE; OVERLOAD; EQUIPTMENT OVER TEMP.; CONTROL POWER SUPPLY FAILURE; OVERLOAD TRIP; DC OVER VOLTAGE; FAN FAILURE; INPUT VOLTAGE HIGH; INPUT CURRENT HIGH; OUTPUT VOLTAGE LOW; STAND BY NOT AVALIABLE	OK/TROUBLE
		OWS # ANN-47359	LOAD ON STAND BY	24V TG DCPS LOAD ON STAND BY (NSR-X)	OK/TROUBLE
		OWS # ANN-47360	BATTERY CB OPEN	24V TG DCPS BATTERY CB OPEN (NSR-X)	OPEN/CLOSE
		OWS # ANN-47361	LOW BATTERY	24V TG DCPS LOW BATTERY (NSR-X)	LOW/NORMAL
		OWS # ANN-47362	VOLTAGE TROUBLE	24V TG DCPS VOLTAGE TROUBLE (NSR-X)	OK/TROUBLE

TRANSMISSION OF ANALOG AND DIGITAL PARAMETERS FROM TG CONTROL POWER SUPPLY TO OPERATOR WORK STATION OF CLUSTER-4:

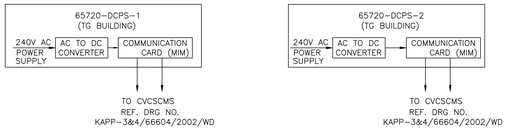

ANALOG SIGNAL (1-5V) TO OWS THROUGH ETHERNET/FIBRE OPTIC :

SR. NO.	65720-DCPS-1 (NSR-N)	65720-DCPS-2 (NSR-X)	DESCRIPTION	PROCESS RANGE	ALARM POINT SETTING
1.	OWS# ANN-47363	OWS# ANN-47368	INPUT VOLTAGE	0-600V AC	498V AC (H) 332V AC (L)
2.	OWS# ANN-47364	OWS# ANN-47369	INPUT CURRENT	0-XXXX AC	
3.	OWS# ANN-47365	OWS# ANN-47370	BATTERY CHARGING CURRENT	0-XXXX DC	
4.	OWS# ANN-47366	OWS# ANN-47371	OUTPUT VOLTAGE	0-XXXX VDC	
5.	OWS# ANN-47367	OWS# ANN-47372	OUTPUT CURRENT	0-XXXXA DC	

THIS DESIGN AND DRAWING IS THE PROPERTY OF TATA CONSULTING ENGINEERS LIMITED (TCE) INDIA LTD. IT MUST BE RETURNED WITH DOCUMENTS OR UPON REQUEST WITHOUT COPYING OR DISCLOSING THE CONTENTS TO ANY OTHER PARTY EXCEPT BY PERMISSION OF THE OWNER.

ISSUE No.	REV. No.	DESCRIPTION	TCE SIGNATURE WITH DATE	N P C SIGNATURE WITH DATE	ISSUE SHT. No.
2	R1	FIELD CONSTRUCTION	–		
1	R0	FIELD CONSTRUCTION	SD/- 31.07.12	AC 13.08.12	

DRAWING ISSUED FOR

NUCLEAR POWER CORPORATION OF INDIA LIMITED
(A GOVERNMENT OF INDIA ENTERPRISE)

DES. CHK'D. DATE	DRAWN. DATE	APP'D. DATE
DK 13.08.12	VKS 13.08.12	AC 13.08.12

TATA CONSULTING ENGINEERS LIMITED
MUMBAI
JOB REF. No.5209E

1.		MISCELLANEOUS CHANGES	

No.	LOCATION	DESCRIPTION	DR'N.	DES'D.	D.CHK'D.	REV'D.	APP'D.
		REVISIONS		SIGNATURE WITH DATE			

No.	LOCATION	DESCRIPTION	DR'N.	DES'D.	D.CHK'D.	REV'D.	APP'D.
		REVISIONS		SIGNATURE WITH DATE			

REFERENCE DRAWINGS	DRAWING No.	REFERENCE DRAWINGS	DRAWING No.

DRG. No. KAPP-3&4/65720/2001/ED

DO NOT SCALE THE DRAWING.

UNLESS OTHERWISE STATED :-
ALL DIMENSIONS ARE IN mm.
MACHINE ALL OVER.
SURFACE FINISH TO BE 3.2/ OR BETTER.
REMOVE ALL BURRS.
REMOVE ALL EXTERNAL SHARP CORNERS AND EDGES BY CHAMFERING TO 0.15 / 0.40 X 45°.
ROUND ALL INTERNAL CORNERS AND EDGES TO R 0.15 / 0.40.
TOLERANCES ON RADII AND CHAMFERS (IS : 2102)

RADII AND CHAMFERS	0.5-3	3-6	6-30
TOLERANCES	± 0.2	± 0.5	± 1.0

TOLERANCES ON LINEAR DIMENSIONS (IS:2102)

DIMENSIONS	TOL.	DIMENSIONS	TOL.
UPTO 6	± 0.1	315 – 1000	± 0.8
6 – 30	± 0.2	1000 – 2000	± 1.2
30 – 120	± 0.3	2000 – 4000	± 2.0
120 – 315	± 0.5	4000 – 8000	± 3.0

TOLERANCES ON LINEAR DIMENSIONS

SPECIFIED DIMENSIONS	TOLERANCE
XX	±
XX.X	±
XX.XX	±

TOLERANCES ON ANGULAR DIMENSIONS : ± 0° – 30'

TITLE :- KAKRAPAR ATOMIC POWER PROJECT- 3&4(2x700MWe)
CLASS-I 24V DC TG CONTROL POWER SUPPLY AND ANNUNCIATION SINGLE LINE DIAGRAM

DES'D. DATE	DR'N. DATE	REV'D. DATE
SD/- 30.07.12		SD/- 31.07.12
DES. CHK'D. DATE	DRG. CHK'D. DATE	APP'D. DATE
SD/- 30.07.12		SD/- 31.07.12

PROJECT: KAPP-3&4

SCALE – N.T.S

PROJECTION

DRG. No. KAPP-3&4/65720/2001/ED

REV. No. R1

FLOPPY/CD No. FILE NAME:KAPP3,4_65720_2001_ED_R1

DRG. TO BE READ IN CONJUNCTION WITH DCN/FCN/ECN, IF ANY.

A0

COPY RIGHT AND CONFIDENTIAL

THE INFORMATION ON THIS DOCUMENT IS THE PROPERTY OF BHARAT HEAVY ELECTRICALS LIMITED. IT MUST NOT BE USED DIRECTLY OR INDIRECTLY IN ANY WAY DETRIMENTAL TO THE INTEREST OF THE COMPANY.

ANNEXURE-E

FEEDER LOAD LIST AND BATTERY SIZING

REVISION: 00

APPROVED

RAJASEKAR K

PREPARED	ISSUED	DATE
AMIT KR SHARMA	416	28 / 8 /15

PROJECT: KAPP 3 & 4 (TG & BOP C&I)

24V DC CHARGER/Load List

Feeder no	Feeder Description	Identification Code	Feeder Load in Amps	MCB rating in Amps	Fuse rating in Amps	Suitable Cable
1		64000-PL-41	40	50	60	2C X 70
		64000-PL-42				
2		64000-PL-43	40	50	60	2C X 70
		64000-PL-44				
3		64000-PL-45	10	16	20	2C X 70
4		64000-PL-01	30	40	50	2C X 70
		64000-PL-02				
		64000-PL-03				
5		64000-PL-04	30	40	50	2C X 70
		64000-PL-05				
		64000-PL-06				
6		64000-PL-07	30	40	50	2C X 70
		64000-PL-08				
		64000-PL-09				
7		64000-PL-10	30	40	50	2C X 70
		64000-PL-11				
		64000-PL-12				
8		64000-PL-13	30	40	50	2C X 70
		64000-PL-14				
		64000-PL-15				
9		64000-PL-16	30	40	50	2C X 70
		64000-PL-17				
		64000-PL-18				
10		64000-PL-19	30	40	50	2C X 70
		64000-PL-20				
		64000-PL-21				
11		64000-PL-22	30	40	50	2C X 70
		64000-PL-23				
		64000-PL-24				
12		64000-PL-29	15	20	25	2C X 70
13		64000-PL-30	15	20	25	2C X 70
CUSTOMER LOADS						
14			63	80	100	
15			2	4	6	
		Total Load	425			
	Total load Incl 15% design margin		**489**			
		10% of battery Ah	123			
		Charger rating (A)	612			

SUMMARY OF NUMBER OF FEEDERS (MCB/FUSE)

S.No	Rating	Qty. USED	SPARE	TOTAL
1	4A/6A	1	1	2
3	16A/20A	1	1	
4	20A/25A	2	1	3
6	40A/50A	8	2	10
7	50A/60A	2	1	3
7	80A/100A	1	1	2
8	TOTAL	**15**	**7**	**20**

Note: The above feeders mentioned for the DCDB-1 of charger-1. DCDB-2 and DCDB-1 are identical.

BATTERY SIZING:

MAKE OF BATTERY		HBL	BUI*	EXIDE
RATED LOAD (Amps)		489		
Permissible Voltage variation at Panels in volts	(A)	18 - 36 V		
Allowed Voltage drop from Battery to DCDB to DCS panels :	(B)	4.75		
Minimum voltage at Battery bank after discharge for 1 hour	C=(A+B)	22.75		
End cell voltage 'ECV' after discharge for 1 hour in Volts per cell	(D)	1.75	1.75	1.75
Number of cells required	F= (C /D)	13	13	13
Number of cells considered for providing 26V DC voltage		13	13	13
K-factor	(G)	1.66	1.67	1.67
Ageing factor	(H)	1.25	1.25	1.25
Design margin #	(I)	1	1	1
Temperature correction factor	(J)	1.207	1.207	1.207
Considering K-factor, Ageing factor, Design margin & TCF Required Ah = RATED LOAD x G x H x I x J		**1225**	**1232**	**1232**

CABLE SIZE CALCULATION

	Voltage drop from Battery to Charger to DCDB		
1	Number of cells	(A)	13
2	Float Voltage per cell **2.2 V**	(B)	2.2
3	Float mode Voltage at Battery Charger	(C) = A x B	28.6
4	Distance from Battery to Charger in mtrs	(D)	165
5	Load Current (Amps)	(E)	425
6	Size of Cable from Battery to Charger **(Sqmm bare COPPER)**		240
7	Resistance of cable at 20 deg.C in Ohms/Km	(F)	0.0762
8	Resistance of cable at 40 deg.C in Ohms/Km	(G) = F/0.926	0.0823
9	Voltage drop in Cable per run (Volts)	(H)=(ExGx2D)/1000	11.541
10	Number of runs of cable per pole	(I)	3
11	Voltage Drop for "I" runs of cable (Volts)	(J) = H/I	3.847
	Voltage drop from charger to DCDB		
1	charger to DCDB connected by solid Cu bus bar	(Z)	0
	Voltage drop from DCDB to DCS Panels		
1	Distance from DCDB to Panels (mtrs)	(K)	20
2	Panel Load Current range (Amps)		0 - 15
3	Max Load current considered (Amps)	(L)	40
4	Size of Cable from DCDB to Panels **(Sqmm bare copper)**		70
5	Resistance of cable at 20 deg.C (Ohms/Km)	(M)	0.27
6	Resistance of cable at 45 deg.C (Ohms/Km)	(N) = M / 0.909	0.297
7	Voltage drop in Cable (Volts)	(O) =(2KxLxN)/1000	0.475
10	Number of runs per pole	(P)	1
11	Voltage Drop for "I" runs of cable (Volts)	(Q) = O/P	0.475
	Total Voltage drop (Battery to Charger to DCDB to Panels)	= J+Z+Q	**4.322**
	Voltage available at panel on Full Load in Float Mode		**24.278**

Note:-

1. The cable conductor resistance are taken as per IS:8130-1984,Table 2 for stranded Al conductor, Class 2,Annexure-A.
2. 1C 630Sqmm cable envisaged between battery to charger. Two runs will be used as +ve cable and onother two as -ve.
3. 2C 35 Sqmm cable envisaged between charger to panels. One core will be used as +ve cable and another as -ve
3. Design margin of 1 is considered in battery sizing as 15% margin is already considered in load.

* M/s BUI is acquired byM/s Union Batteries

Note: Battery sizing and cable sizing shown above are on for reference of charger vendors and these are not in scope of supply of this tender.

COPY RIGHT AND CONFIDENTIAL

THE INFORMATION ON THIS DOCUMENT IS THE PROPERTY OF BHARAT HEAVY ELECTRICALS LIMITED. IT MUST NOT BE USED DIRECTLY OR INDIRECTLY IN ANY WAY DETRIMENTAL TO THE INTEREST OF THE COMPANY.

ANNEXURE-F

TECHNICAL COMPLIANCE SHEET FOR DCDB TO BE FILLED BY PARTICIPATING VENDORS AND SUBMITTED ALONG WITH TECHNICAL BID

REVISION: 00

APPROVED		
RAJASEKAR K		
PREPARED	ISSUED	DATE
AMIT KR SHARMA	416	28 / 8 /15

ANNEXURE – F

TECHNICAL PARTICULARS REQUIRE

1.0 TECHNICAL DATA TO BE SUPPLIED ALONGWITH THE TENDER

Tenderers shall submit with their bids, a complete description of all equipment on which their bid is based and such description shall include the details given hereunder. It is necessary that all details shall be completely filled in the first instance to evaluate the bid and compare it with other offers.

Bids with incomplete or ambiguous information shall not be considered.

The details hereunder shall be complete in all respects and reference to other places shall be avoided as far as possible.

Class I
24V DC

2.1 Complete Equipment

2.1.1 Make

2.1.2 Type reference

2.1.3 Is indication provided?

2.1.4 Is voltmeter provided?

2.1.5 Is ammeter provided?

2.1.6 Are fuse ratings as per specifications?

2.1.7 Are no. of sub-buses as per specifications?

2.1.8 Are no. of MCBs as per specification?

2.1.9 Are ratings of CBs as per specs?

		Class I **24V DC**
2.1.10	Is cable entry from bottom/top?	
2.1.11	Ambient temperature and humidity at which the system can operate satisfactorily.	
	Temperature	
	Humidity	
2.1.12	Are the panels seismically Qualified?	
2.1.13	Whether panels are seismically qualified by analysis and testing or by testing	
2.1.14	Mean time between failure of	
	- Complete equipment	…….Hrs
	- Device having lowest MTBF	…….Hrs
	- MTTR	…….Hrs
2.1.15	Are the electronic components subjected to burn-in-test before use?	Yes/No.
2.1.16	Is the equipment fully tropicalised?	Yes/No.
2.1.17	Is the empty panel electromagnetic shielded and Flasher unit EMC tested?	Yes/No.
2.1.18	Do all equipment used independently support combustion?	Yes/No.

Class I
<u>24V DC</u>

2.1.19	Are the panels natural cooled?	Yes/No.	
2.1.20	Temperature rise anticipated inside panel	---^{0}C.	
2.1.21	Is the color shade of the panel shade 365 as per IS-5 for KAPP-3?	Yes/No.	
2.1.22	Is the color shade of the panel shade 275 as per IS-5 for KAPP-4?	Yes/No.	
2.1.23	Weight of each panel		
2.1.24	Overall size of every panel.		
	Height	…….mm	
	Length	…….mm	
	Depth	…….mm	
2.1.25	Insulation resistance of panel at 500V DC.		
2.1.26	Voltage proof of every panel at 1500 V AC.		
2.1.27	Is Insulation Monitoring Device (IMD) mounted?		N
2.1.28	Is scanner and Earth Fault Sensor (EFS) mounted?		N
2.1.29	Is selector HS provided for meter selection?		N

		Class I 24V DC
2.1.30	Are HS"s provided to connect IMD & scanner?	
2.1.31	Is LCM mounted & wired?	
2.1.32	Is MSCPD mounted?	Not Applicab
2.1.33	Are terminations provided for incoming cables?	
2.1.34	Are bus bars as per specifications?	
3.0	**HOUSING**	
3.1	Thickness of sheet steel.	…….mm
3.2	Is sheet steel cold rolled?	Yes/No
3.3	Are ventilation louvers provided?	Yes/No
3.4	Are ventilation louvers screened?	Yes/No
3.5	Is the enclosure rigid free floor standing?	Yes/No
3.6	Is rear access available?	Yes/No
3.7	Are the panels electromagnetically shielded?	Yes/No
4.0	**TESTS**	
	The component tests and other functional tests mentioned in section 8.0 will be performed.	Yes/No.

4.1 IR/HV test at appropriate voltage level will be performed at site. Yes/No.

5.0 TENDER DRAWINGS

The Bidder shall list the tender drawings which are being submitted along with the bid. A general arrangement drawing showing main equipment layout, general features, overall dimensions, wiring arrangement etc, must accompany the bid.

6.0 TIME REQUIRED BY SUPPLIER

The supplier must state the period required for the preparation of drawings and the time he has allowed for approval of the drawings by the purchaser in the delivery period specified.

7.0 TRANSPORTATION

The supplier must state the mode of transportation whether by rail or by truck, and what measures will be taken to ensure that the equipment does not get damaged in transit.

8.0 PROOF OF ABILITY

The bidder shall submit a brief list of jobs executed by him (and name of respective customers) to standards and tolerances specified in the tender document. The bidder shall clearly indicate seismically qualified Control power supply distribution system contracts executed, if any.

9.0 LIST OF APPENDICES

A list of all appendices, annexure, characteristic curves, printed technical literatures which form an integral part of this tender shall be listed.

10.0 DEVIATIONS FROM SPECIFICATIONS

The bidder shall note that all the details of the technical specification are not brought out in the section no. 2 against "Technical data to be supplied along with the tender" format. Hence, the bidder shall confirm that the system is as per this complete specification. In case of any deviations, from the technical specification, the deviation shall be clearly listed referring the section of the tender document in order, under the specific heading of deviations from technical specification. Bids which do not list deviations specifically under this heading or do not confirm there are no deviations from the technical specification will not be considered for evaluation.

COPY RIGHT AND CONFIDENTIAL

THE INFORMATION ON THIS DOCUMENT IS THE PROPERTY OF BHARAT HEAVY ELECTRICALS LIMITED. IT MUST NOT BE USED DIRECTLY OR INDIRECTLY IN ANY WAY DETRIMENTAL TO THE INTEREST OF THE COMPANY.

ANNEXURE-G

QAP FOR DCDB

(The QAP is subject to approval)

REVISION: 00

APPROVED		
RAJASEKAR K		
PREPARED	ISSUED	DATE
AMIT KR SHARMA	416	28 / 8 /15

ANNEXURE - G

QUALITY ASSURANCE PLAN FOR MAIN CONTROL CENTRE POWER SUPPLY DISTRIBUTION PANELS (SAMPLE)

Sl. No	Components and operations	Characteristics	Class	TYPE OF CHECK	QUANTUM OF CHECK	REFERENCE DOCUMENT	ACCEPTANCE NORMS	FORMAT OF RECORDS	AGENCY			REMARKS
									P	W	V	
1.	Miniature Circuit Breaker	Visual Dimension Operation Type no / making Tripping characteristics Insulation resistance Die-electric strength	A B B C C C C	Verification Measurement Performance Verification Measurement Measurement Performance	100% Sample 100% 100% Sample 100% Sample	Manufacturer"s Spec. IS/IEC-60898	IS/IEC-60898	TC	2	2	1	
2.	Series reactors	Dimension Inductance Value Insulation resistance Dielectric strength Temp. rise Double Freq. Double Voltage withstand test	B B C C C C	Measurement Measurement Measurement Performance Measurement Performance	100% 100% 100% 100% Sample Sample	IS-5553	IS-5553	TR	2	2	1	
3.	Control Transformer / Pulse Transformer	Dimension Terminal Marking & Polarity Voltage ratio No load current Insulation resistance Dielectric strength	B B C C C C C	Measurement Verification Measurement Measurement Measurement Measurement Performance	100% 100% 100% 100% 100% 100% 100%	IS-3156	IS-3156	TC	2	2	1	

ANNEXURE - G

QUALITY ASSURANCE PLAN FOR MAIN CONTROL CENTRE POWER SUPPLY DISTRIBUTION PANELS (SAMPLE)

Sl. No	Components and Operations	Characteristics	Class	TYPE OF CHECK	QUANTUM OF CHECK	REFERENCE DOCUMENT	ACCEPTANCE NORMS	FORMAT OF RECORDS	AGENCY			REMARKS
									P	W	V	
4.	Fuses	Dimension Type no / Marking Continuity	A C C	Measurement Verification Verification	Sample Sample Sample	Manufacturer‟s spec.	IS-13703	TC	2	2	1	
5	Fuse holders	Visual Dimension Type no/marking Insulation resistance Dielectric strength	A A C C C	Verification Measurement Verification Measurement Performance	Sample Sample Sample sample Sample	Manufacturer‟s spec.	Manufacturer‟s spec.	TC	2	2	1	
6.	Printed Circuit Board	Dimension Continuity Solderability Insulation resistance Dielectric strength Peel strength	B C C C C C	Measurement Verification Verification Measurement Performance Measurement	Sample Sample Sample Sample Sample Sample	PP-E-1443	PP-E-1443	TC	2	2	1	
7.	Relays	Dimension Coil Resistance Operating voltages Insulation resistance Dielectric strength Solderability	B B C C C C	Measurement Measurement Measurement Measurement Performance Performance	Sample Sample Sample Sample Sample Sample	Manufacturer‟s Catalogue IS-5051	IS-5051	TC	2	2	1	

ANNEXURE - G

QUALITY ASSURANCE PLAN FOR MAIN CONTROL CENTRE POWER SUPPLY DISTRIBUTION PANELS (SAMPLE)

Sl. No	Components and Operations	Characteristics	Class	TYPE OF CHECK	QUANTUM OF CHECK	REFERENCE DOCUMENT	ACCEPTANCE NORMS	FORMAT OF RECORDS	AGENCY			REMARKS
									P	W	V	
8.	Transistors	Dimension Type No./Marking Solderability Breakdown voltage Vceo Amplification factor Collector leakage current Resistance to solvent	B B C C C C C	Measurement Verification Verification Measurement Measurement Measurement Performance	Sample Sample Sample Sample Sample Sample Sample	Manufacturer"s spec. IS-14901	IS-14901	TC	2	2	1	
9.	Voltage reference diodes	Dimension Type no. / Marking Breakdown voltage Leakage current Resistance to solvent	B B C C C	Measurement Verification Measurement Measurement Performance	Sample Sample Sample Sample Sample	Manufacturer"s spec. IS-14901-3	IS-14901-3	TC	2	2	1	
10.	Signal diodes	Dimension Type no./Marking Reverse leakage current Solderability	B B C C	Measurement Verification Measurement Performance	Sample Sample Sample Sample	Manufacturer"s spec. IS-14901-3	IS-14901-3	TC	2	2	1	

ANNEXURE - G

QUALITY ASSURANCE PLAN FOR MAIN CONTROL CENTRE POWER SUPPLY DISTRIBUTION PANELS (SAMPLE)

Sl. No	Components and Operations	Characteristics	Class	TYPE OF CHECK	QUANTUM OF CHECK	REFERENCE DOCUMENT	ACCEPTANCE NORMS	FORMAT OF RECORDS	AGENCY			REMARKS
									P	W	V	
11.	Low power resistors	Visual Resistance value Solderability	A C C	Verification Measurement Verification	Sample Sample Sample	IS-5786 Part I - XI	IS-5786 Part I - XI	TC	2	2	1	
12.	ICs a) Linear b) Digital	Visual Type no/ Marking Functional checks Visual Type no./Marking Functional checks	B B C A B C	Measurement Verification Performance Verification Verification Performance	Sample Sample Sample Sample Sample Sample Sample	Manufacturer"s spec. IS-14901	IS-14901	TC	2	2	1	
13.	Capacitors For PCBs	Visual Type No./marking Dimension Capacitance value Leakage current	A B B C C	Verification Verification Measurement Measurement Measurement	Sample Sample Sample Sample Sample	Manufacturer"s spec. IS-590	IS-590	TC	2	2	1	

ANNEXURE – G

QUALITY ASSURANCE PLAN FOR MAIN CONTROL CENTRE POWER SUPPLY DISTRIBUTION PANELS (SAMPLE)

Sl. No	Components and Operations	Characteristics	Class	TYPE OF CHECK	QUANTUM OF CHECK	REFERENCE DOCUMENT	ACCEPTANCE NORMS	FORMAT OF RECORDS	AGENCY			REMARKS
									P	W	V	
14.	Ceramic disc capacitor/ metallised polyester capacitor/ tantalum capacitors	Visual Type No. / marking Dimension Capacitance value For ceramic disc capacitors	A B B C C	Verification Verification Measurement Measurement Performance	Sample Sample Sample Sample	Manufacturer"s spec. JSS-50203/ JSS-50204 JSS-50205 IS-8507	JSS-50206/ JSS-50204 JSS-50205 IS-8507	TC ↓	2 ↓	2 ↓	1 ↓	
15.	Flasher Relay (Solid State)	Visual Dimension Di-Electric Strength Insulation Resistance Setting Accuracy for the Set time Repeat Accuracy	As per NPCIL approved test procedure	As per NPCIL approved test procedure	As per NPCIL approved test procedure	As per NPCIL approved test procedure	As per NPCIL approved test procedure	As per NPCIL approved test procedure				
16.	Flasher Failure Unit (Solid state)	Visual Dimension Di-Electric Strength Insulation Resistance Functional Test 100 hr Burn in	As per NPCIL approved test procedure	As per NPCIL approved test procedure	As per NPCIL approved test procedure	As per NPCIL approved test procedure	As per NPCIL approved test procedure	As per NPCIL approved test procedure				
~~17.~~	~~Ground~~ Fault Detection system	~~Refer Specification~~ No. PB-E-249	~~Refer~~ Specification No. PC-E-249	~~Refer~~ Specification No. PC-E-249	~~Refer~~ Specification No. PC-E-249	~~Refer~~ Specification No. PC-E-249	~~Refer~~ Specification No. PC-E-249	~~Refer~~ Specification No. PC-E-249				

ANNEXURE – G

QUALITY ASSURANCE PLAN FOR MAIN CONTROL CENTRE POWER SUPPLY DISTRIBUTION PANELS (SAMPLE)

Sl. No	Components and Operations	Characteristics	Class	TYPE OF CHECK	QUANTUM OF CHECK	REFERENCE DOCUMENT	ACCEPTANCE NORMS	FORMAT OF RECORDS	AGENCY			REMARKS
									P	W	V	
18.	MCB status Monitoring system	Refer Specification No. PC-E-248	Refer Specification No. PC-E-248	Refer Specification No. PC-E-248	Refer Specification No. PC-E-248	Refer Specification No. PC-E-248	Refer Specification No. PC-E-248	Refer Specification No. PC-E-248				
19.	Handswtiches (Selector)	Visual Dimension Operations Type no. / marking Insulation resistance Die-electric strength	B C C C C C	Measurement Verification Performance Verification Measurement Performance	100% Sample 100% 100% 100% Sample	Manufacturer"s Spec IS/IEC-60947-5	IS/IEC-60947-5	TC	2	2	1	
20.	Meters	Visual Dimensions Type no. / marking Accuracy Insulation Resistance	A B C C C	Verification Measurement Verification Measurement Measurement	100% Sample 100% 100% 100%	Manufacturer"s Spec. IS-1248/8573	IS-1248/8573	TC	2	2	1	

ANNEXURE – G

QUALITY ASSURANCE PLAN FOR MAIN CONTROL CENTRE POWER SUPPLY DISTRIBUTION PANELS (SAMPLE)

Sl. No	Components and Operations	Characteristics	Class	TYPE OF CHECK	QUANTUM OF CHECK	REFERENCE DOCUMENT	ACCEPTANCE NORMS	FORMAT OF RECORDS	AGENCY			REMARKS
									P	W	V	
21.	PTFE insulated Copper Wire including 22 AWG (30/7) silver copper conductor and PTFE insulated wire for MCBSMS (auxiliary contact wiring)	Visual Dimensional insulation resistance Dielectric strength	A C C C	Verification Measurement Measurement Performance	Sample Sample Sample Sample	MIL-W-16878E	MIL-W-16878E	TC	2	2	1	
22.	Electrical (wiring)	Routing of Wires Bunching, Ferruling, Crimping, Soldering, Clearance and colour Coding	Major	Visual	100%	Manufacture"s Spec.	Manufacturer"s Spec.	TC	2	2	1	
23.	Painting	Pretreatment check Scratch hardness check Bend (Flexibility) Test Pull of Adhesion test Painting thickness check	C B B B B	Process Physical Mechanical Physical Measurement	Type test on test coupon Clause no. 3.0 of IS-101 Clause no. 2.0 of IS-101 Clause no. 5.0 of IS-101	PC-E-253 IS-101 IS-101 IS-101 PC-E-253	PC-E-253 IS-101 IS-101 IS-101 PC-E-253	TR	2	2	1	CHP

ANNEXURE -G

QUALITY ASSURANCE PLAN FOR MAIN CONTROL CENTRE POWER SUPPLY DISTRIBUTION PANELS (SAMPLE)

Sl. No	Components and Operations	Characteristics	Class	TYPE OF CHECK	QUANTUM OF CHECK	REFERENCE DOCUMENT	ACCEPTANCE NORMS	FORMAT OF RECORDS	AGENCY			REMARKS
									P	W	V	
24.	Final Assembly and pre testing	Dimension Component verification Layout verification Wiring Check Cable identification Insulation resistance Dielectric strength	Major Major Major Critical Major Critical Critical	Measurement Verification Verification Continuity Verification Measurement Performance	100% 100% 100% 100% 100% 100% 100%	Manufacturer‟s drawings	Manufacturer‟s drawings	TC	2	2	1	
25.	Final Testing (a) Physical Verification	Presence of all items as per BOM	B	Visual	100%	Manufacturer‟s drawings	Manufacturer‟s drawings	TC	2	2	1	
26.	Test on system. Type Test	Dimension of modules and panels Connection checking of modules High Voltage Test on panels Functional test as per referred EDs	C B B B	Measurement Performance Performance Performance	Sample Sample Sample 100%	As per approved test procedure As per approved test procedure As per approved test procedure As per approved test procedure	As per approved test procedure As per approved test procedure As per approved test procedure As per approved test procedure	TR TR TR TR	2	2, 1	1	CHP

ANNEXURE -G

QUALITY ASSURANCE PLAN FOR MAIN CONTROL CENTRE POWER SUPPLY DISTRIBUTION PANELS (SAMPLE)

Sl. No	Components and Operations	CHARACTERISTICS	CLASS	TYPE OF CHECK	QUANTUM OF CHECK	REFERENCE DOCUMENT	ACCEPTANCE NORMS	FORMAT OF RECORDS	AGENCY			REMARKS
									P	W	V	
27.	Acceptance tests	Dimensions of module, panels	C	Measurement	100%	As per approved procedure	As per approved procedure	TR	2	2	1	CHP
		Insulation resistance test of panels and modules	B	Measurement	100%	As per approved procedure	As per approved procedure	TR	2	2	1	
		High voltage test of panel	B	Measurement	100%	As per approved procedure	As per approved procedure	TR	2	2	1	
		Functional test on panels	C	Performance	100%	As per approved procedure	As per approved procedure	TR	2	2	1	
28.	Special type test	Environmental test	C	Performance	One sub assembly	As per approved test procedure	As per approved test procedure	TR	2	2, 1	1	CHP
		EMC test	C	Performance	One panel & Flasher unit	IEC-61000-5-7 PC-E-710	~~PC-E-254~~ PC-E-710	TR				
		MCB Coordination test	C	Performance	Each type	As per approved test procedure	As per approved test procedure	TR				
		~~Seismic Qualification~~	~~C~~	~~Performance~~	~~Two panels~~	~~As per approved test procedure~~	~~As per approved test procedure~~	~~TR~~				

LEGEND:

P	:	Performed by	A	:	Minor	1.	:	Purchaser
W	:	Witnessed by	B	:	Major	2.	:	Prime Supplier
V	:	Verified by	C	:	Critical	3.	:	External Laboratory
			TC	:	Test Certificate			
			TR	:	Test Report			
			CHP	:	Customer Hold Point			

COPY RIGHT AND CONFIDENTIAL

THE INFORMATION ON THIS DOCUMENT IS THE PROPERTY OF BHARAT HEAVY ELECTRICALS LIMITED. IT MUST NOT BE USED DIRECTLY OR INDIRECTLY IN ANY WAY DETRIMENTAL TO THE INTEREST OF THE COMPANY.

PROJECTS : KAPP UNIT 3 & 4 2X700MWe (TISCS Package)
: RAPP UNIT 7 & 8 2X700MWe (TISCS Package)

CUSTOMER : M/s. NPCIL, MUMBAI

TECHNICAL SPECIFICATION

FOR

220V DC POWER SUPPLY SYSTEM

Rev01:
Certain standards are removed. Such standards are striked off in this revision document in RED
Rev02:
Correction are marked in BLUE at pg 25 & 75.
NPCIL standards are attached

APPROVED		
RAJASEKAR K		
PREPARED	ISSUED	DATE
AMIT KR SHARMA	416	25 / 9 /15

CONTENTS

SECTION	DESCRIPTION
A	GENERAL INSTRUCTIONS TO BIDDERS
B	PRE-QUALIFICATION REQUIREMENTS
C	SCOPE OF SUPPLY
D	TECHNICAL REQUIRMENTS
E	ANNEXURES

COPY RIGHT AND CONFIDENTIAL

THE INFORMATION ON THIS DOCUMENT IS THE PROPERTY OF BHARAT HEAVY ELECTRICALS LIMITED. IT MUST NOT BE USED DIRECTLY OR INDIRECTLY IN ANY WAY DETRIMENTAL TO THE INTEREST OF THE COMPANY.

COPY RIGHT AND CONFIDENTIAL
THE INFORMATION ON THIS DOCUMENT IS THE PROPERTY OF BHARAT HEAVY ELECTRICALS LIMITED. IT MUST NOT BE USED DIRECTLY OR INDIRECTLY IN ANY WAY DETRIMENTAL TO THE INTEREST OF THE COMPANY.

SECTION- A

GENERAL INSTRUCTIONS TO BIDDERS:

Introduction: Bidders are required to offer 220V DC Charger system to be used for powering DCS panels of secondary cycle of Nuclear Power Plants. All required documents against this Tender/Specification shall be submitted in English only.

Pre-qualification requirements (PQR) are clearly mentioned in Section-B of this Specification. In case Bidder does not meet Pre-qualification requirements, their offer will be summarily rejected and Bidder's Technical offers will not be evaluated.

1. **Evaluation methodology:**
   a) BHEL shall initially open Bidder's PQR documents (to be submitted as per Section-B clause-AA) only, for review, evaluation & acceptance by BHEL.
   b) Technical bids shall be opened for review and further consideration for only those bidders who meet Pre-qualification requirements. Technical offer of bidders who does not meet Pre-qualification requirements will not be opened for further consideration and shall be declared as technically rejected.
   c) Bidders declared qualified for meeting requirements mentioned in section B and are presently not registered with BHEL EDN Bangalore for supplying the charger system, shall be informed by email to submit online BHEL vendor registration form at www.bhel.com.
   d) Bidders declared qualified for meeting section-B requirements and are not approved by end customer (M/s NPCIL) for the project, their credentials documents as provided by bidder (under section-B), shall be forwarded to NPCIL for approval.
   e) Bidders who are not approved by customer (M/s NPCIL), their offers shall be technically rejected and shall not be considered for further process for procurement.

2. **Submission of documents:**

   a. Documents pertaining to Pre-Qualification requirement Section B clause AA should be submitted in a Separate cover. "Section B clause AA" should be written on this cover.
   b. Documents pertaining to Pre-Qualification requirement (Section B clause BB) should be submitted in a Separate cover marked as "Section B clause BB".
   c. Technical offers/proposals pertaining to Sections C & D should be submitted in a separate cover marked as "Technical offer".

3. Whenever required during evaluation of PQR and Technical offers/bids, vendor should be present at BHEL Electronic Division, Bangalore, for discussions. Further in the event of order, during approval of the Vendor documents by Customer, Vendor shall accompany BHEL representative for discussions.

4. This specification does not prohibit any vendor to submit their offer along with clause wise deviation from the specification.

COPY RIGHT AND CONFIDENTIAL
THE INFORMATION ON THIS DOCUMENT IS THE PROPERTY OF BHARAT HEAVY ELECTRICALS LIMITED. IT MUST NOT BE USED DIRECTLY OR INDIRECTLY IN ANY WAY DETRIMENTAL TO THE INTEREST OF THE COMPANY.

SECTION- B

Clause AA

Pre-Qualification Requirements (PQR) of Bidders for 220V DC charger system:

a) The bidder should be a reputed manufacturer who have been in the field of manufacturing DC Chargers for not less than 10 years and have designed, engineered, manufactured and supplied 220V DC Chargers which are equal to or superior than specification provided in this document, to atleast two nuclear / thermal power units which are in successful commercial operation for at least 2 years under similar condition as specified in this document. Supporting documents like PO copies, performance certificates issued by user, MOM for commissioning and handing over of system etc should be provided.

b) Original Equipment Manufacturers (OEM) based outside India, who are submitting offer for this tender, shall have authorized representatives in India for support related to Documentation, technical support, troubleshooting, Erection, Commissioning & any other co-ordination work. Letter from OEM detailing Indian representative organization details should be provided.

c) OEM to furnish an undertaking letter that in case of change in Indian representative / agent, OEM shall continue to support the supplies made through this tender.

d) BHEL shall issue call for service / commissioning with maximum 15 days' notice. Bidder to submit undertaking letter for agreeing to visit project sites within above notice period.

COPY RIGHT AND CONFIDENTIAL
THE INFORMATION ON THIS DOCUMENT IS THE PROPERTY OF BHARAT HEAVY ELECTRICALS LIMITED. IT MUST NOT BE USED DIRECTLY OR INDIRECTLY IN ANY WAY DETRIMENTAL TO THE INTEREST OF THE COMPANY.

SECTION- B

Clause - BB

Along with the documents related to PQR above, following details shall also be included in the Offer:

1. Technical literature / datasheets of offered System (as per technical specification Section – C & D) to be submitted.
2. Submit List of Projects for which offered system is supplied, commissioned and working satisfactorily for more than 2 years (as per PQR requirements).
3. Name & registered address of the Indian branch office or Indian representative for support of E&C and after sales service with Organization chart.
4. Bidder shall have facility in India for Engineering activities, preparation of Documents, trouble shooting and commissioning of the system. Documents substantiating these to be submitted.
5. If Bidder is not Original Equipment Manufacturer (OEM), then Bidder to include Authorization letter from OEM for Design, Engineering, Manufacture, Testing, supply, Erection, Commissioning and Servicing of the offered System. This Authorization letter provided by OEM to Bidder shall indicate the Type and Duration of Validity of the agreement.

Important note: All bidders, irrespective of being already registered/approved by BHEL/NPCIL, should furnish all documents mentioned in Section-B failing which their offer is liable to be rejected.

COPY RIGHT AND CONFIDENTIAL

THE INFORMATION ON THIS DOCUMENT IS THE PROPERTY OF BHARAT HEAVY ELECTRICALS LIMITED. IT MUST NOT BE USED DIRECTLY OR INDIRECTLY IN ANY WAY DETRIMENTAL TO THE INTEREST OF THE COMPANY.

SECTION-C

SCOPE OF SUPPLY

COPY RIGHT AND CONFIDENTIAL
THE INFORMATION ON THIS DOCUMENT IS THE PROPERTY OF BHARAT HEAVY ELECTRICALS LIMITED. IT MUST NOT BE USED DIRECTLY OR INDIRECTLY IN ANY WAY DETRIMENTAL TO THE INTEREST OF THE COMPANY.

1. SCOPE OF SUPPLY

A) Main item supplies shall consist of following:

Sl no	Description of Item	Quantity for KAPP unit 3&4	Quantity for RAPP unit 7&8
1	**Float cum Boost Main charger (90Amps)**	**4nos**	**4nos**
2	**DCDB**	**4nos**	**4nos**
3	**BHMS system**	**4nos**	**4nos**
4	**ETHERNET MODBUS connectivity to DCS (incl all items required)**	**4nos**	**4nos**
5	**Erection supervision, commissioning, site testing and handing over**	**4sets**	**4sets**

B) Mandatory spares: The Spares are to be supplied as below separately for each project:

a) 10% of the plug-in sub assemblies/units or at least one unit, whichever is more.

b) 10% of the components like thyristors/transistors not mounted on the sub assemblies /units or at least one component whichever is more.

The vendor shall give a list of spares with the offer based on the above.

The bidder shall provide unit rate of each main item like main charger, standby charger, DCDB, Switch Fuse unit, BHMS System, Erection supervision & commissioning charges in price bid. Unit rate of each item of mandatory spares must be provided in price bid.

2. Training:

4 Nos. of NPCIL engineers shall be trained at supplier's works for operation and maintenance. To & fro conveyance charges, boarding & lodging charges will be borne by the NPCIL. Training charges, if any, shall be mentioned in the offer. If training is free, the same shall also be mentioned in the offer clearly.

3. Documents to be submitted:

3.1 Following documents shall be furnished to BHEL as a minimum, apart from any other documents required to be submitted as called elsewhere in the specification.

3.2 **Along with the Technical offer**: For technical evaluation, vendor must send one (01) set of the following documents in hard copy.

01. Single line diagram, Circuit diagrams, schematic drawing
02. GA drawings, weight, outline dimension
03. Fault co-ordination details
05. Technical write-up / Technical literature / Catalog of each major component
06. Wiring diagram/interconnecting arrangement details
07. Complete Bill of Material with make & Model
08. Clause-wise compliance/deviation list, clearly indicating compliance/deviation to all the clauses mentioned in this specification

NOTE: - Later no explanation on noncompliance or deviation, stated or observed, may be acceptable. Incomplete offers (without documents / not relevant documents as mentioned above) will be technically rejected without any notice.

COPY RIGHT AND CONFIDENTIAL
THE INFORMATION ON THIS DOCUMENT IS THE PROPERTY OF BHARAT HEAVY ELECTRICALS LIMITED. IT MUST NOT BE USED DIRECTLY OR INDIRECTLY IN ANY WAY DETRIMENTAL TO THE INTEREST OF THE COMPANY.

3.3 **After placement of Purchase Order within 1 week**: For BHEL/Consultant/Customer approval, Vendor must send Eight (8) sets of the following documents in hard copy & one (01) CD in soft copy, for each project.

a) All documents Sl. No 01 ~ 13 as above.
b) Interfacing diagram & cable type details used or suggested.
c) Quality Plan format enclosed as part of the specification.
d) Test Procedure: The equipment shall be tested as per approved test procedure.

3.4 **After Type Test but before Inspection :** For BHEL/Consultant/Customer approval, vendor must send two (2) Sets of the following documents in hard copy & one in soft copy.

01. Type test reports/Certificates as per specification/approved QP
02. Preliminary Instruction /O&M Manual

3.5 **Along with the materials being dispatched:** Vendor must send five (5) sets of the following "**As Built & Approved"** status documents four (4) in hard copies & one (1) in soft copy.

(a) Instruction/O&M Manual
(b) Bill of Material
(c) Data Sheets
(d) Technical literatures/Catalogs
(e) Drawings GA/layout/wiring/interconnection/schematic, etc.)

Instruction/O&M Manual: It shall include

a. General Information
b. Principal technical data.
c. Description of components.
d. Description of various controls with block schematics.
e. Operating instructions.

COPY RIGHT AND CONFIDENTIAL

THE INFORMATION ON THIS DOCUMENT IS THE PROPERTY OF BHARAT HEAVY ELECTRICALS LIMITED. IT MUST NOT BE USED DIRECTLY OR INDIRECTLY IN ANY WAY DETRIMENTAL TO THE INTEREST OF THE COMPANY.

TECHNICAL SPECIFICATIONS OF 220V DC CHARGER

REVISION: 00

APPROVED		
RAJASEKAR K		
PREPARED	ISSUED	DATE
AMIT KR SHARMA	416	29 / 8 /15

COPY RIGHT AND CONFIDENTIAL
THE INFORMATION ON THIS DOCUMENT IS THE PROPERTY OF BHARAT HEAVY ELECTRICALS LIMITED. IT MUST NOT BE USED DIRECTLY OR INDIRECTLY IN ANY WAY DETRIMENTAL TO THE INTEREST OF THE COMPANY.

1.0 SCOPE

The scope of this specification covers the design, manufacture, testing, supply, delivery and commissioning of the Battery Chargers for KAPP 3&4 and RAPP 7&8 projects.

2.0 CONTENTS

The requirements of this specification are presented under following section headings.

Description	Section
Applicable standards, specifications and drawings.	3
Materials, processes and workmanship.	4
General functions and description.	5
Design requirements.	6
Inspection, tests and reports	7
Tests	8
Packing and Shipment	9
Information required with the bid	10
Technical details required with the bid.	Annexure-A
Quality Assurance Plan (Sample)	Annexure-B
Details of alarms and indications	Annexure-C
Block diagram of charger	Annexure-D
Feeder list and battery sizing	Annexure-E

3.0 APPLICABLE STANDARDS, SPECIFICATIONS AND DRAWINGS

All documents listed below constitute a part of this specification. In the event that certain requirements of specifications, drawing or data listed below conflict with the requirements of specification, the requirements of this specification shall govern.

3.1 Applicable Standards

IS-11171 : Dry type power transformers
IS-11794 : Lamination for transformers & inductors for telecom & electronic equipment
IS-3895 : Monocrystalline semiconductor rectifier cells and stacks
IS-4540 : Monocrystalline Semiconductor rectifier assemblies and equipment
IS-5051 : Relays for Electronics and Telecommunication Equipment
IS-60947 : Specification for Low-Voltage Switchgear and Control gear
IS-60898 : Miniature circuit breaker
IS-14901 : Semiconductor Devices - Discrete Devices and Integrated Circuits
IS-2705 : Current transformers
IS-3156 : Voltage transformers
IS-5553 : Reactors (Inductors)
IS-13703 : Low voltage fuses for voltages not exceeding 1000 V AC or 1500 V DC
IS-1248 : Direct Acting Indicating Analog Electrical Measuring Instruments & Accessories
IS-5786 : Fixed resistors general purpose, low power
IS-7788 : Single phase traction power converters
IEC-60146 : Semiconductor converters
IS-8872 : Variable resistors
IS-2786 : Ceramic dielectric capacitors
IS-4317 : Aluminium electrolytic capacitors with non solid electrolyte
IS-4794 : Push button switches
MIL 883G : Test method standard: Microcircuits
IS-694 : PVC insulated cables for working voltages up to and including 1100V
IS-513 : Cold rolled low carbon steel sheets and strips
IS-6005 : Code of practice for phosphate coatings of iron and steel
IS-5 : Colour for ready mixed paints

COPY RIGHT AND CONFIDENTIAL
THE INFORMATION ON THIS DOCUMENT IS THE PROPERTY OF BHARAT HEAVY ELECTRICALS LIMITED. IT MUST NOT BE USED DIRECTLY OR INDIRECTLY IN ANY WAY DETRIMENTAL TO THE INTEREST OF THE COMPANY.

IS-9000(Part-III) :Basic environmental testing procedure for electronic & electrical item: Dry heat test
IS-9000 (Part V) :Basic environmental testing procedures for electronic & electrical items: Damp heat (cyclic) test
~~IEEE-946 : IEEE recommended practice for the design of safety related DC auxiliary Power systems for Nuclear Power Generating Station~~
~~IEEE-650 : IEEE standard for qualification of Class-1E static battery chargers and inverters for Nuclear Power Generating Station~~
~~IEEE-344 : IEEE recommended practices for seismic qualification of Class 1E equipment for Nuclear Power Generating Station~~

3.2 Applicable Specifications
PP-E-1443: Specification for the manufacture of single sided, double sided and multi layered printed wiring boards.
PP-E-2061: Specifications for requirements of components for instrumentation items.
~~PC-E-409: Technical specification for (polyamide) & accessories for non radiation area for 700MWe~~.
PC-E-710 : Engineering Standard for Electromagnetic Compatibility Qualification of C&I Equipment

4.0 MATERIALS, PROCESSES AND WORKMANSHIP
4.1 Materials and Processes
The materials, processes and standard parts which are not specifically described herein and which are necessary to meet this specification shall be of first class commercial quality and in accordance with the good practice pertinent to the equipment's. All components used shall be "type approved" or shall have gone through a satisfactory quality assurance test programme. As far as possible components shall be adequately derated so as to increase the system reliability. Use of integrated circuits is preferred. All the semiconductor components shall be of silicon.

4.2 Workmanship
The workmanship shall be of high industrial quality to ensure satisfactory operation and service life of 40 years in accordance with the provisions of this specification. The units shall be modular and access to any portion of the unit shall be easily available for maintenance and adequate tests points shall be provided for trouble shooting purposes.

4.3 Tropicalisation
The design, material used, manufacturing and assembly shall be done to render the parts and assembled equipment moisture, fungus, microorganism and termite resistant. Proper surface treatment of the moisture and fungus susceptible parts of the component and their assembly shall be done. Care shall be taken during treatment to avoid its effect on the performance of the component and its assembly.

5.0 Environmental conditions
Normal operating conditions
Ambient temperature from 8ºC to 45ºC and relative humidity up to 90 %
Occasional/Storage conditions
Ambient temperature from 5ºC to 55ºC and relative humidity up to 95 %

COPY RIGHT AND CONFIDENTIAL
THE INFORMATION ON THIS DOCUMENT IS THE PROPERTY OF BHARAT HEAVY ELECTRICALS LIMITED. IT MUST NOT BE USED DIRECTLY OR INDIRECTLY IN ANY WAY DETRIMENTAL TO THE INTEREST OF THE COMPANY.

6 System Concept of 220V DC charger

The Battery Charging equipment shall comprise of Charger-I & Charger-II for each unit (refer charger block diagram). The input supply to the DCPS shall be fed through a two winding transformer to ensure proper galvanic isolation from the input source. The DCPS shall be able to produce output voltage ranging from 220V DC to 341V DC adjustable through potentiometer. The DCPS shall have soft start feature. 12 PULSE SCRs shall be used for converting AC to DC.

There shall be two selector switches on front panel, one switch for Auto/Manual mode selection and second switch for Boost / Equalising / Float operation.

6.1 General features of Float cum boost (FCB) MAIN CHARGER:

The DCPS shall have provision for operating satisfactorily in any of following conditions:

6.1.1 Supply of load at 220V DC (nominal) and float charging of batteries:

The DCPS shall supply control loads at 220V DC nominal and simultaneously trickle charge the battery at float voltage of 242V. Diode Voltage Regulator (DVR) in series shall be used so that voltage in the range of 209V DC to 235V DC is available at DC output bus after the DVR for supplying the load and simultaneously float charge the battery at 242V. DVR shall be cut-off at the outage of DC power supply while battery is getting discharged. A bypass switch shall be provided which will bypass the DVRs so that direct charger output is available at DCDB

6.1.2 Supply of load at 220V DC (nominal) & Boost charging of Batteries at 2.4VPC:

Following the loss of AC supply to the 220V DCPS, the Battery will feed the power to 220V DC loads. The discharged Batteries are required to be recharged. The DCPS shall supply control loads at 220V DC (nominal) and simultaneously automatic boost charge the Batteries at boost voltage of 264 VDC. Diode Voltage Regulator (DVR) in series shall be used so that voltage in the range of 198V DC to 234V DC is available at DC output bus after the DVR for supplying the load and simultaneously boost charging the Battery at 264 VDC.

The DCPS shall have provision for charging batteries satisfactorily in both Manual and Automatic Mode with the help of selector switch provided on the DCPS front panel

6.1.2.a Automatic Mode:

In the automatic boost charging mode, the DCPS shall charge the batteries with battery charging a preset current limit of 10% of rated battery capacity. The DCPS voltage shall be set at 2.4V/cell i.e. 31.2V for 13cells. As soon as the battery voltage reaches at 258.5V, a timer shall start counting for a preset duration. Voltage shall remain constant at 264V during the preset duration. Once the preset time period is over, the charger voltage shall automatically come down to float voltage of 242V. The timer shall have provisions for setting time duration of 4hrs / 6 hrs / 8hrs / 10hrs / 12hrs / 14hrs / 18hrs.

6.1.2.b Manual Mode:

In the manual boost charging mode the boost charging voltage shall be adjustable through voltage adjustment potentiometer to the required voltage in the range of 200V to 264V. The DCPS voltage shall be set at 2.4V/cell i.e. 264V. The DCPS shall charge the battery with current limit of 10% of battery rating. The DCPS shall be manually stopped after three consecutive hourly voltage readings are constant at specific gravity of 1.2 ± 0:0005.

A bypass switch shall be provided which will bypass the DVRs so that direct charger output during boost charging is available at DCDB

COPY RIGHT AND CONFIDENTIAL
THE INFORMATION ON THIS DOCUMENT IS THE PROPERTY OF BHARAT HEAVY ELECTRICALS LIMITED. IT MUST NOT BE USED DIRECTLY OR INDIRECTLY IN ANY WAY DETRIMENTAL TO THE INTEREST OF THE COMPANY.

6.1.3 Supply of Loads at 220V DC (nominal) & also Equalizing Charging of Batteries:
Equalizing charging of lead acid batteries shall be done in the following modes:

6.1.3.a Automatic mode:
In the automatic equalising charging mode, the 220V DCPS shall· have provision for charging at constant potential mode i.e. 253V (2.3V/cell). The current limit shall be set at 5% of rated battery size. A facility for equalizing charging with preset timer shall be provided with adjustable duration of 2hrs / 4hrs / 6 hrs / 8hrs / 10hrs / 12hrs. After the preset lime the DCPS shall change over to float mode and equalizing charging shall be stopped automatically.

6.1.3.b Manual mode:
In the manual equalizing charging mode provision for equalizing 220V DC lead acid battery shall be made with features as mentioned for automatic mode but without a preset timer. The equalizing charging shall be stopped manually after the required duration as per battery manufacturer's recommendation.

6.1.4 Initial Charging of Batteries:
220V DCPS shall be able to provide initial charge to the batteries at constant current of 12% of battery size till the individual cell voltage in the battery bank reaches 2.4V DC. Further 51 amps constant current shall be provided till the battery gets fully charged. Total AH to be fed to the battery shall be 6 times of battery size. DC voltage may reach up to 341V

6.3 Switch Fuse Unit: Not Applicable

6.4 Design Parameters
6.4.1 INPUT: The DCPS shall be suitable for operation on a nominal input sinusoidal symmetrical supply of 415V, 3 phase, 3 wire, 50 cycles. The steady state input voltage and frequency variation will be as below.

Voltage variation	+ 10%
Frequency variation	+ 5%
Combined voltage & frequency variation-	+ 10%
Voltage unbalance	+ 3%

The DCPS shall be capable of maintaining the following at the input side:

Input current harmonics	<12%
Power factor	>0.8

COPY RIGHT AND CONFIDENTIAL
THE INFORMATION ON THIS DOCUMENT IS THE PROPERTY OF BHARAT HEAVY ELECTRICALS LIMITED. IT MUST NOT BE USED DIRECTLY OR INDIRECTLY IN ANY WAY DETRIMENTAL TO THE INTEREST OF THE COMPANY.

6.4.2 OUTPUT OF CHARGER

Output voltage	220V DC nominal
Output voltage range:	
i) Load	209V DC to 235V DC after DVR during float mode
	198V DC to 235V DC after DVR during boost mode.
ii) Battery Charging	
a) Float voltage	242V(2.2V / cell)
b) Boost voltage	264V(2.4V / cell)

DESIGN PARAMETERS FOR CHARGER

Steady state regulation Output voltage	± 1% of set voltage
Transient regulation	± 20% of set voltage
(On sudden application or removal of 100% load)	
Recovery time of voltage from transient condition to rated output voltage	500ms
Ripple content in DC output	Less than 2% (with battery disconnected)
Boost charging current limit	10% of rated full load current
Type of earthing	Floating w.r.t ground
Maximum noise level	75 dB
Efficiency	≥ 80% at full load and nominal input / output
Overload Capacity	: 110% for 30mins ;
	: 150% for 1 minute
	: MCB Clearance as per section 8.2.10

6.5 Protection Controls & Power:

6.5.1 Protection:

D.C Output Side: The circuit interruption on DC side shall be by means of DC CB.
The vendor shall provide.

a) **Instantaneous trip protection** in the event of a short circuit if the DCPS is connected with reverse polarity to the station battery.

b) **Instantaneous trip protection** to provide over current protection to each rectifier / thyristor. Fuses shall be provided for this protection, they shall be specifically designed for semiconductor protection. These fuses shall be properly co-ordinate with main output protection as described in a) above. All the fuses shall have an alarm contact with trip indication or alarm fuse in parallel with the power fuse having alarm contact with trip indication. In addition to fuse protection, thyristor pulse blocking method shall be adopted.

c) **Over voltage trip protection** by blocking the Rectifier and tripping the input AC CB. The over voltage device shall have continuous setting over the whole range and shall be equipped with inherent time delay so as to be insensitive to transient over voltages (spikes in grid). Contact shall be available for alarm also.

d) **Overall current limit:** The DCPS shall continue to work on overload of 110% for 30 minutes, 150% for 1minute and 200% for fuse clearance time. Charger may be tripped after above mentioned time duration at specified overload. The current limits shall be fast acting and shall be able to withstand a switched load from no load conditions 10 full load with more than 20% transient over current in the voltage range of 198V to 235V.

COPY RIGHT AND CONFIDENTIAL
THE INFORMATION ON THIS DOCUMENT IS THE PROPERTY OF BHARAT HEAVY ELECTRICALS LIMITED. IT MUST NOT BE USED DIRECTLY OR INDIRECTLY IN ANY WAY DETRIMENTAL TO THE INTEREST OF THE COMPANY.

e) Output Contactor shall be tripped when mains have failed, and alarm plus visual indication shall be provided.
f) Surge and lightning protection dv/dt and di/dt protection for thyristors.
g) The Supplier may provide any other protection or alarm which is necessary for the reliable trouble free and efficient performance of the equipment

6.5.2 Control Circuits:

Semi-conductors:
All semiconductor devices shall be silicon. All semiconductors shall have heat sinks of sufficient thermal rating so that the junction temperature of the devices will remain within the non-destructive limits with sufficient margin at an ambient of' 45Deg C. Silicon Control Rectifier (SCR) shall be used for rectifier. All semiconductor devices shall be adequately derated to prolong the life of devices, but shall not be derated below 0.7 of normal voltage and current or 0.5 of the normal rated power.
Transistors: The transistors are to be derated to as follows:
Collector current: 80%
Any other Voltage: 70%
Diode: The diodes are to be derated to as follows:
Forward current: 50%
Peak reverse voltage: 50%
Control Fuses: All control fuses for protection of semiconductor shall be semiconductor fuse
Capacitors: The use of electrolytic capacitors shall be kept to an absolute minimum and wherever possible tantalum capacitors shall be used. Capacitor voltage shall be derated to 50%.
Terminal Blocks: Terminal block shall be of Polyamide (nylon 6.6) and brass clamping yoke. Fire rating shall be V0 as per UL-94. Current bar shall be of copper alloy.
Resistors: All resistors mall be preferably metal oxide type and in general shall not be rated more than 50% of the manufacturer's rating. Preset Potentiometer shall be used instead of fixed resistors wherever wide range voltage and current adjustments are necessary and shall be provided with locking devices. Wire wound resistors shall be used in snubber circuits and as bleeder resistors. Power of resistors shall be derated to 50%.
Relays: All relays shall be compact, hermetically sealed and dust proof to provide maximum reliability and shall be free from contact deterioration. Freewheeling diode shall be provided as integral part of relay.
Connectors: All connectors shall be suitably plated to provide good contact. The connector shall be designed in a manner to avoid plugging in wrong direction.
Construction: All devices shall be manufactured on a modular basis to enable rapid replacement of a faulty module by a spare module.
Monitor Points: Monitor points shall be provided for rapid fault finding.
Meters: Indicating meters on the front panel of DCPS shall be preferably digital type with Minimum resolution of 1V for voltmeter and lA for ammeter. All meters shall have full scale accuracy of $\pm$2% minimum.

6.5.3 Power Circuits

6.5.3.1 Transformer/Choke: The power transformer/choke shall be derated to as follows:
Voltage: 90%
Current: 80% (including harmonics)

6.5.3.2 Capacitors: Electrolytic capacitors shall be used for DC purpose and non-electrolytic capacitors shall be used for AC purpose. Capacitor voltage shall be derated to 50%.

COPY RIGHT AND CONFIDENTIAL
THE INFORMATION ON THIS DOCUMENT IS THE PROPERTY OF BHARAT HEAVY ELECTRICALS LIMITED. IT MUST NOT BE USED DIRECTLY OR INDIRECTLY IN ANY WAY DETRIMENTAL TO THE INTEREST OF THE COMPANY.

6.5.3.3 Diode / Thyristors: The thyristors are to be derated to as follows:

Forward current : 80%
Peak reverse voltage : 50%
Junction temperature : 80% (Analytical calculation to be submitted by supplier)

6.5.3.4 Load Testing Facility: Provision of bus bar with suitable isolation device shall be made for connecting external load

6.6 MTBF & MTTR: Meantime between failures of the DCPS shall be about 50,000 hours. The vendor shall indicate the mean time between failure (MTBF) and meantime to repair (MTTR) for the DCPS and also basis for MTBF & MTTR.

6.7 ALARMS: All the relays used in the logic for generating alarm shall be kept in energized condition during normal operation of DCPS. The alarm shall be "OPEN TO ALARM" type with relays kept in energized condition in general. The following alarms shall be provided for each DCPS. The supplier has to do wiring and bring the terminals for purchaser's connection. The value of different parameter for alarm and trip set points is given as below.

6.7.1 General Alarms

a) DC overvoltage at the output bus	235V for alarm 240 V for trip
b) Output over load	110%.for alarm 1l0% for 30 minutes, 150% for 1min & 200% fuse clearance and trip set
c) Low battery for 220V DC DCPS	190V for Alarms
d) Battery current limit exceeded	10% of battery AH
e) DC under voltage at the output bus	190V for Alarm.

6.7.2 Remote Alarm + trip Points:

Potential free contacts shall be provided for following alarms + trip points on each DCPS. These potential free contacts shall be wired to separate terminal block and then connected to communication interface card (Ethernet communication). The communication interface card shall be provided by end customer. Control power supply for Alarms & LED indications shall be fed from both Input AC & DC battery with proper isolation and auxiliary diode. 8nos of hardwired alarms contacts (closed when normal) as shown in charger block diagram to be provided per unit for NPCIL use.

a) Output CB tripped
b) DC over voltage at the output bus.
c) Mains failure
d) Output overload (after DVR)
e) N/A
f) DC under voltage at output bus
g) Interruption of Main charger DC output due to short circuit/reverse polarity
f) Any other alarm suggested by the vendor.
g) Control supply failure

6.7.3 Only Alarm Points

Potential free contacts shall be provided for following parameters:

a) Rectifier fuse failure
b) Capacitor fuse failure
c) Output overload
d) Mains failure
e) Low battery for 220V DC DCPS (before DVR)
f) Control power supply failure
g) Battery Current limit exceeded.
h) DC over voltage at output bus
i) DC under voltage at output bus
j) Battery on load
k) Fan failure
I) Redundant DCPS not available
m) Equipment over temperature
n) Battery CB open
o) Any other alarm suggested by the supplier.

COPY RIGHT AND CONFIDENTIAL
THE INFORMATION ON THIS DOCUMENT IS THE PROPERTY OF BHARAT HEAVY ELECTRICALS LIMITED. IT MUST NOT BE USED DIRECTLY OR INDIRECTLY IN ANY WAY DETRIMENTAL TO THE INTEREST OF THE COMPANY.

6.7.4 LED Indication on DCPS (front panel)

a) DCPS output voltage high
b) DCPS input voltage high / low
c) Fuse failure
d) N/A
e) DCPS output overload (after DVR)
f) DCPS output breaker/contactors tripped
g) Fan failure
h) Equipment over temperature
i) Control power supply failure
j) Battery on load
k) Redundant DCPS not available

Alarm reset button should be provided on front panel of each charger)

6.7.5 LED ON MIMIC

a. Input CB ON
b. Rectifier ON
c. Output CB ON
d. Battery CB ON

6.7.6 Besides above following general purpose LEDs shall be provided:

a. Input RY, VB, BR
b. Manual Mode
c. Auto mode
d. Float charging
e. Initial charging
f. Equal ise charging

g. Boost charging @ 2.4 VPC
h. Boost charging@ 2.75 VPC
1. Timer ON

6.7.7 Meters on DCPS front panel

The following meters shall be provided on the front panel of the DCPS with proper labeling.

1. AC Voltmeter at input
2. AC Ammeter at input
3. Ammeter for battery charging current
4. DC Voltmeter at output
5. DC Ammeter at output
6. N/A

All meters shall be LED 7 segment digital type of size approximately 48 x 96 mm and shall be suitable for flush mounting. Zero adjustment shall be possible from front side. Meters for AC voltage, DC current measurement shall be 4 and ½ digits while meters for AC current and DC voltage shall be 3 and ½ digits. Accuracy of meters shall be 1% full scale or better. All voltage circuits of meters shall have fuses. Meters shall comply IS: 8573.

6.7.8 Remote Display and Annunciation

The parameters listed below shall be converted in the form of 1-5V signals by the supplier. These signals shall be galvanically isolated for 1.5KV. The measurement accuracy shall be + 0.5%. These signals shall be wired to separate terminal block and then connected to communication interface card (Ethernet communication) as mentioned in section 6.6.2. The description and process range of the 1-5V signals to be transmitted are given below.

Description Process Range

1. DCPS input voltage 0-600V AC
2. DCPS input current 0-75A AC
3. Battery charging current 0-100A DC
4. DCPS output voltage 0-40V DC
5. DCPS output current 0-900A DC

5nos of analog signal as shown in charger block diagram shall be provided through dual output (1-5V) transducer for connectivity to DCS and NPCIL system.

COPY RIGHT AND CONFIDENTIAL
THE INFORMATION ON THIS DOCUMENT IS THE PROPERTY OF BHARAT HEAVY ELECTRICALS LIMITED. IT MUST NOT BE USED DIRECTLY OR INDIRECTLY IN ANY WAY DETRIMENTAL TO THE INTEREST OF THE COMPANY.

6.8 CONSTRUCTION:

6.8.1 Rectifiers and Thyristors:

Rectifiers shall be of mono-crystalline type silicon, capable of continuous output at specified voltages. It shall have high power efficiency and shall be equipped with voltage on AC side of rectifier control. The rectifier shall be 12 pulse, thyristor based.

HRC fuses shall be provided with trip indication along with potential free annunciation Contacts.

The silicon rectifiers or thyristors bank shall be natural air cooled. The rectifiers or thyristors shall be protected against over voltages due to chopping surges and hole-storage with the aid of snubbers.

6.8.2 Transformers:

The transformer shall be natural air cooled dry type. The transformer design shall take care of abnormal stresses due to external short circuits. The rating of the transformer shall correspond to the rating of the rectifier considering all the losses. The transformer may have full capacity primary tap at a suitable percentage of its nominal voltage to produce D.C. voltage to equalize charge the batteries. The transformers shall be noise free. Class of insulation of transformer shall be class H. Temperature rise of the transformer shall not be more than 90deg C. The transformer shall be designed, manufactured & tested as per latest issue of IS-1117l.

6.8.3 Dimensions:

The overall dimension of each charger including DCDB shall be within 2400mm width x 800 mm depth x 2300 mm height

6.8.4 Printed Circuit Boards:

All small electrical and electronic components shall be wired on PCBs. The PCBs shall be segregated in the form of cards according to function/system and shall have printed name for function of PCB on both sides. PCBs shall be mounted in such a way that all components along with LED indication and potentiometers are visible / accessible for easy replacement and maintenance. PCB housing shall be provided with suitable guides so, that only insertion of correct PCB in right manner is possible. The PCBs shall be stacked properly within cubicles.

Double sided PCBs of glass epoxy based, copper laminated type shall be used with high quality soldering and shall be suitably enamel coated for protection against moisture and dust to ensure longer life. The PCB shall be designed to meet the requirement specified in NPC specification PPE-I443 (To be issued to the successful bidder) All PCBs shall be housed in semi draw out modular construction

6.8.5 Housing and Foundation:

The DCPS cabinet shall be fabricated from cold rolled steel sheets having a minimum thickness of 1.6mm. It shall be bidder's responsibility to select suitable sheet thickness (especially for load bearing doors) to avoid any slagging or bending. Fabrication and design of the enclosure shall be such as to make the complete assembly rigid; self supporting and free from magnetic vibration, twist and Weave.

Enclosure shall be indoor type, floor mounting, suitable for forced air cooling and shall be completely dust and vermin proof. All steel parts including walls, doors and roof shall be adequately supported and stiffened to prevent flexing. All removable panels supplied for access to die interior of the housing shall be equipped with suitable captive fastenings and shall be of a size that can be conveniently handled by one man.

COPY RIGHT AND CONFIDENTIAL
THE INFORMATION ON THIS DOCUMENT IS THE PROPERTY OF BHARAT HEAVY ELECTRICALS LIMITED. IT MUST NOT BE USED DIRECTLY OR INDIRECTLY IN ANY WAY DETRIMENTAL TO THE INTEREST OF THE COMPANY.

Enclosure shall conform to protection class of IP-41. Panels shall be provided with removable lifting hooks on the top for handling. Suitable base channels (ISMC) of 100mm height shall be provided for anchoring to the floor. DCPS shall be suitable for top cable entry.

6.8.6 Ground Bus

Safety Ground Bus Bar

A safety ground bus bar of bare copper with 150 sq. mm minimum cross section shall be provided to run along the panel at the bottom. Bus bar shall be permanently brazed to the sheet steel frame work. All sub assemblies and non current carrying metal parts like doors etc shall be connected to this safety ground bus bar. Bus bar shall be accessible at both ends for connection to the station ground system. A crimp type copper lug of size 4 /0 AWG shall be provided at the end of safety ground bus bar. The safety ground bus bar shall have tapped holes at regular intervals along its length to enable cable termination of grounding wires from individual devices. A 15mm diameter hole is to be provided at each end of the bus bar. All metallic cases / modules shall be connected to the electrical earth by independent copper wire of size not less than 4 sq. mm. The colour of grounding wires shall be green. Grounding wires shall be connected on devices With suitable clamps and soldering is not permitted.

Signal Ground Bus Bar

Each cabinet shall be provided with 25mm x 6mm thick electrolytic copper bus bar conforming to IS-1897. The bus bar shall be of Electrolytic Tough Pitch (ETP) or Fire Refined High Conductivity (FRHC) grade. The signal ground bus bar shall have holes drilled at regular intervals to terminate the signal ground wire. The safety ground bus bar shall be suitably isolated from the main frame. Necessary terminal clamps and connectors for this purpose shall be in the scope of supplier.

6.8.7 Enclosure ventilation and illumination:

Enclosure shall be fan cooled, for better heat dissipation and to allow a reduced size of cubicles. Arrangement shall be provided to circulate the air homogeneously throughout the compartment. Louvers provided for ventilation shall be located in the compartment doors and bolt-on panels. The louvers shall be suitably screened or fitted to prevent entrance of vermin etc. Fan failure alarm and indication shall be provided for monitoring the healthiness of fans. Flapper circuit design shall not be used for monitoring of fan failure. The DCPS shall be able to operate satisfactorily even after failure of cooling fan for about 8 hrs on full load. All the materials used for construction shall be such that they will not independently support combustion. Round compact fluorescent lamp of 20 watts, 240V AC, I Ph shall be provided with door switch. Thermostatically controlled space heater and 3pin 5A receptacle with plug shall be provided in each charger panel.

6.8.8 Cabling:

6.8.8.1 Cable supports and arrangements:

Cable entry shall be from top. Suitable termination arrangements and support shall be provided inside the DCPS. Suitable termination arrangements shall be provided including cable lugs, glands and supports inside the DCPS. The cable lugs shall be of the crimping type. All internal power wiring shall have crimped lug termination.

6.8.8.2 Bus Bars:

Hylum bariers shall be provided between bus bars of opposite polarity. Adequate space shall be given for maintenance. Cu Bus Bar of suitable rating for connecting Charger to DCDB shall be provided ensuring negligible voltage drop.

COPY RIGHT AND CONFIDENTIAL
THE INFORMATION ON THIS DOCUMENT IS THE PROPERTY OF BHARAT HEAVY ELECTRICALS LIMITED. IT MUST NOT BE USED DIRECTLY OR INDIRECTLY IN ANY WAY DETRIMENTAL TO THE INTEREST OF THE COMPANY.

6.8.9 Terminal blocks and small wiring:
Wiring of electronic circuits shall be 250 volt grade 1.5 sqmm minimum. Wiring between terminals of various devices shall be point to point (no wire splitting or Connections with wires trunked). It shall be so arranged that instruments or devices may be removed and/or services without unduly disturbing the wiring. Each wire shall be identified at both ends with wire numbers corresponding to the numbers shown in the supplier's drawings. Wire marks used shall be non-deteriorating type. All control wiring shall be adequately segregated and protected from fault.
Provisions shall be made for grounding voltage and current transformer neutrals where required. Wiring affected by stray electromagnetic fields shall be suitably shielded or run as twisted pairs wherever applicable
Terminal blocks shall be grouped by services and segregated according to circuit voltage and field designation. Where schematic diagrams show more than one wire to be connected to any wiring point, a sufficient number of terminals jumper together shall be provided to allow any one wire per terminal on the outgoing side of the terminal block. 20% spare terminals, suitably distributed shall be provided. Connections to terminal blocks shall be easily removable for testing purposes.

The cabinet shall be provided with two nos. suitably located grounding terminals to connect 4/0 AWG copper ground conductor. Each terminal shall comprise of two bolt drilling with M10 GI bolts and nuts to receive grounding connection. All non-current carrying metal parts shall be ended to a ground bus of copper.

6.8.10 PAINTING

6.8.10.1 Painting procedure: On completion of fabrication, all steel work shall undergo following process

a) Pre-treatment by seven tank process.
b) Under Coat and painting.

6.8.10.2 Pretreatment. by seven tank process: Heavy deposits of grease, oil and rust shall be removed manually.

- **Degreasing:** Surface cleaning to remove oil, grease, dirt and swerve from assemblies shall be done by either of following methods:
  a) Trichloroethylene cleaning as per.clause 7.120 of lS:6005 OR
  b) Alkaline cleaning as per clause 7.1.3 of lS-6005.
- **Derusting:** Rust may be present after degreasing owing to exposure' to corrosive conditions during manufacture. Scale may be present from operations during manufacture. It is therefore, necessary that rust be removed before application of phosphate treatment.
  Derusting shall be done by chemical treatment method as per clause no. 8.1.2 of IS-6005. Manufacturer may adopt either of the following methods:
  a) Sulfuric or hydrochloric acid pickling as per clause no. 8.1 .2.1 of IS.6005 OR
  a) Phosphoric acid pickling as .per IS·6005.
  b) Duplex sulfuric and phosphoric acid process as per clause no. 8.1 .2.3 of lS·6005

COPY RIGHT AND CONFIDENTIAL
THE INFORMATION ON THIS DOCUMENT IS THE PROPERTY OF BHARAT HEAVY ELECTRICALS LIMITED. IT MUST NOT BE USED DIRECTLY OR INDIRECTLY IN ANY WAY DETRIMENTAL TO THE INTEREST OF THE COMPANY.

- **Sand blasting** maybe done as per clause no 8.1 .1.2 of IS6005 instead of degreasing and de-rusting as given above. Procedure for sand blasting is as follows:
  a) Sand blasted surface shall be free of visible scale, rust, paint or foreign matter.
  b) The sand employed for blasting shall be from river bed, dry, hard and of a low breakdown rate and free from foreign matter. Preferred particle size of sand shall be 0.8 to 1.0 mm.
  c) The compressed air used for blasting shall be dry and clean.
  d) The surface, after completion of the cleaning operation shall be free from sand particles.
  e) Phosphate coaling shall be applied within 24 hours of blasting.
- **Phosphate treatment:**
  The phosphate treatment shall be carried out in such a manner that coating formation is proper as per Class C vide clause 3.1.4 of IS-6005. Proper attention shall be given to time of phosphating, solution temperature and composition for required coating formation. The coating weight shall be in accordance with IS-3618.
- **Rinsing and Chromate passivation:** Alia- phosphating, thorough rinsing with water is necessary in order to remove soluble salts which would otherwise tend to promote blistering under a paint film. Care should also be taken to ensure that the water supply itself is sufficiently free harmful salts. Then the components shall be used in hot dilute chromate solution as per clause no. 4.4.1 of lS·3618 under a temperature not below 60°C.
- **Undercoat and painting:**
  Manufacturer may adopt either wet painting in hard glass alkali based synthetic enamel or powder coating. Manufacturer shall submit detailed procedure before starting the job.

6.8.10.3 Finish: Structural steel and external panel surface shall be painted with baked enamel paint according to procedure approved by the customer. The finish exterior colour shall be LIGHT IVORY TO SHADE RAL:1015 SEMI GLOSSY KAPP UNIT-3 & RAPP Unit-7 of RAPP and LIGHT GREY TO SHADE RAL:7035 SEMI GLOSSY for KAPP Unit-4 & RAPP Unit-8. Interior paint shade will be brilliant white for all projects. Thickness of the finish paint shall be min of 25 microns. Composite film thickness (i.e. including all under coats) shall be 70 microns minimum. On inside surface shall be 40 microns min. Support members (brackets etc. used inside the panel as standard items of the manufacturing shall be finished with nickle plating wherever they are not painted. All the fasteners used like bolts, screws, nuts, plain washers etc. shall be finished to nickle plating. Hardware used on the front of panel shall be finished to nickel plating unless stated otherwise.

6.8.11 Equipment Identification

Name plates shall be provided on the door of the compartment of each set of equipment to identify the equipment obtained therein. Nameplates shall also be provided on the face of the panels or doors to identify all meters, relays etc. Tag or nameplate shall also be provided within the compartments to identify such individual equipment (which has an equipment number) such as relays etc. Name plates shall be held by self-tapping screws. The size of nameplates shall be approximately 20mm X 75mm for equipment and 40mm X 150mm for panels.

The identification shall consist of the official name of the equipment with the equipment number below the name. Wherever necessary, the labels shall be provided to describe the function of an item of equipment or to give warning against mal-operation. Attached to the exterior of the cabinet shall be nameplate as per approval of NPCIL.

COPY RIGHT AND CONFIDENTIAL
THE INFORMATION ON THIS DOCUMENT IS THE PROPERTY OF BHARAT HEAVY ELECTRICALS LIMITED. IT MUST NOT BE USED DIRECTLY OR INDIRECTLY IN ANY WAY DETRIMENTAL TO THE INTEREST OF THE COMPANY.

6.8.12 Mimic Diagram:
Mimic Diagram made of anodized aluminum or plastic material which can be easily cleaned shall be provided on the panel. It shall be fixed by screws.

6.9 Tropicalization: The supplier shall provide details of his intentions with regard to tropicalisation, including details of any special features for the following items:

- Transfonners
- Relays
- Wiring
- Terminals
- Rectifiers
- Controller Thyristor
- Contactors

6.10 EMC Testing: The 220V DC main battery charger shall be tested for Electromagnetic Compatibility as per PC-E-710 on "Electromagnetic compatibility qualification of C&I equipment".

7.0 INSPECTION TEST & REPORT
2.17.1 Quality Surveillance & Inspection:
The vendor shall allow access to the M/s NPCIL or his authorised representative at all reasonable time, during manufacture, assembly, testing and inspection to premises in which work is being carried out. The supplier shall provide all the testing and inspection services and facilities as required. Supplier's shop inspection shall be under the control of a competent Chief Inspector who primacy responsibility is inspection reporting directly to Management.
The inspection shall be carried out in a manner satisfactorily and shall be subject to approval by the Purchaser. A Quality Assurance Plan (QAP) is enclosed in Annexure to this specification. Vendor shall prepare QAP based on the QAP enclosed herewith and submit to purchaser for approval.
Manufacturer shall carry out all inspection and tests, apart from that all work covered by this specification shall be subject to quality surveillance by the NPCIL/BHEL or his authorized representative. Quality Surveillance by the Purchase or his authorized representative shall not relieve the supplier of the inspection duties called herein. In addition to the tests performed by the supplier, the purchaser shall have the right to ask for additional inspection or testing as deemed necessary and the additional cost of such tests will be borne by the NPCIL.
In the event of any failure to meet the inspection or test requirements specified herein, the supplier shall notify NPCIL/BHEL or their authorised representative. The supplier must obtain permission from the purchaser before repair is undertaken. If repairs, including redesign, are likely to affect the results of tests previously completed, appropriate re-inspection and re-testing shall be carried out .The quality control procedure to be followed to ensure a satisfactory repair shall be subject to approval by Purchaser.
The supplier shall provide NPCIL/BHEL or their representative with complete set of detailed drawing which will be used by them to assist in the inspection during construction of the equipments and which will be returned after the completion of the contract. Inspection shall not be limited to the end product only. Facilities shall be provided for inspection during various stages of manufacture and as agreed between the supplier and the purchaser.

COPY RIGHT AND CONFIDENTIAL
THE INFORMATION ON THIS DOCUMENT IS THE PROPERTY OF BHARAT HEAVY ELECTRICALS LIMITED. IT MUST NOT BE USED DIRECTLY OR INDIRECTLY IN ANY WAY DETRIMENTAL TO THE INTEREST OF THE COMPANY.

If there are changes in the components or design/type already type tested and design type offered against this specification, the purchaser reserves the right to demand repetition of tests without any extra cost before commencement of supply. The bidder shall bring out in his offer all such changes made in components, materials, design etc. as the case may be and likely affects of such changes on type qualification

8.0 TESTS

The supplier shall carryout tests to show that the equipment has been satisfactorily designed and manufactured and will perform to the standards required by this specification. If some tests mentioned cannot be carried out at supplier's works the same shall be carried out at site. In such a case, the supplier shall indicate the procedure of the test. If the equipment does not pass the test, it will be the supplier's responsibility to bring the equipment to the guaranteed figure or replace the faulty equipment at his cost. Any special equipment required for testing, like meters or relays, etc. if not available at purchaser's site office shall be supplied by the supplier.

8.1 Component Testing:

All semiconductors and other discrete components to be used in the DCPS shall be screened. These shall be procured from reputed manufacturer with certificate of compliance to recent relevant specifications. Component testing shall be done as pet MIL standard-883C. Active component like lCs, transistors, diodes shall be subjected to baking at maximum storage temperature for 24 hours. Then the component shall be subjected to temperature cycles between minimum storage temperature and maximum storage temperature for 10 cycles. Duration of each cycle shall be 15 minutes. Transition time from one cycle to another shall be 5 minutes. After the temperature cycling functional testing shall be done on 100% active component

Passive components like resistors, capacitors, relays, control transformer shall be subjected to baking and temperature cycling as above. However functional testing shall be done on sample basis for passive components. Details of the test to be conducted shall be listed in "Quality Assurance Plan" to be submitted by the vendor after award of contract. The components to be tested arc shown below. Suppliers shall lest all the components used and not necessarily only the components listed below.

List of Components to be tested:

(i)	Electrolytic Capacitors	(ii)	Diode
(iii)	Circuit Breaker	(iv)	Contactors
(v)	Switches	(vi)	Meters
(vii)	Control Transformers	(viii)	Fan Supply transformers
(ix)	Input transformers	(x)	DC filter choke
(xi)	PCBs	(xii)	Current transformers
(xiii)	Shunt	(xiv)	Temperature sensor
(xv)	Control cables	(xvi)	Power cables
(xvii)	DC filter assembly	(xviii)	Surge and lightning suppressors
(xix)	Rectifier assembly	(xx)	Fuses

8.2 Routine tests on system:

Following test shall be conducted on the complete DCPS as per IEC-146 wherever applicable. Five bound volumes containing copies of these test reports shall be submitted to the NPCIL. Shipping release will be issued only after receipt of three bound volume of test reports. Supplier shall keep a record for a period of five years after completing the job.

COPY RIGHT AND CONFIDENTIAL
THE INFORMATION ON THIS DOCUMENT IS THE PROPERTY OF BHARAT HEAVY ELECTRICALS LIMITED. IT MUST NOT BE USED DIRECTLY OR INDIRECTLY IN ANY WAY DETRIMENTAL TO THE INTEREST OF THE COMPANY.

1. Visual inspection for quality of workmanship, finish, dimensional checks &degree of protection.
2. Verification of compliance with approved drawings including checking of BOM & wiring.
3. Connection checking & overall dimension checking of modules, bins and panels.
4. All interlocks and sequence operation of circuits such as indications on front panel, alarms and trips shall be shown.
5. Voltage regulation of rectifier for input voltage variation at 415V (-) 10% / 415V (+) 10%.
6. Undershoot & overshoot voltage of rectifier output when 100% load is switched on & off.
7. Overload capability
8. Insulation resistance test.
9. High Voltage test
10. Input in-rush current measurement when DCPS is switched on at rated load.
11. Battery current limiting feature and V-I characteristics of the charger.
12. Test for diode voltage regulator operation
13. Short circuit capability test by connecting 100% load to DCPS & than short circuiting output.
14. Burn in test: DCPS shall be kept on load continuous for a period of 100 hours at nominal input voltage and full output load. Various functional tests mentioned above shall be carried out after burn in test. Burn in test and above functional test shall be conducted on all equipment.
15. Tests to prove functional requirements. Variation of voltages and current limit set values for all modes of charging and checking of accuracy for above settings.
16. Mechanical operation tests on switches, auxiliary electrical and mechanical devices.
17. Checking of equipment overall current limit operation.
18. Electrical control interlock and sequential operation tests
19. Insulation resistance test at 500V DC.
20. High Voltage test at 2000V AC RMS for one minute.
21. Functional tests on auxiliary devices.
22. Alternating current measurements on the input side in all phases at full load and no load including power factor, wave shape and harmonics injected to the system.
23. Measurement of losses and efficiency at full load, 50% and 25% of load rated input/output voltages.
24. Ripple content of DC output at maximum and minimum DC bus voltage and charging conditions under specified input voltage range.
25. All alarms and trips to be checked for satisfactory operation at various loads from zero to full load including specified over load.
26. N/A
27. Noise Level test (max. 75 dB) at 1.5m distance from DCPS.
28. Efficiency of DCPS at full load and rated input / output voltages.
29. Voltage regulation of rectifier for input voltage variation at415V $\pm$ 10%
30. Ripple content of rectifier output at float voltage & boost voltage.
31. Undershoot and overshoot voltage of rectifier output when 100% load is switched on and 80% load switched off.
32. Battery charging test at boost voltage.
33. Power Factor measurement with 3 Phase PF meter at full load and at rated input voltage.

8.3 Special type test

8.3.1 Environmental Tests

Typical sub assemblies of one DCPS shall undergo environmental testing as mentioned below..

Dry heat test for PCB & sub assembly

Dry heat test as per IS-9000 Part III/Section: 3 test must be conducted at conditions mentioned:

Temperature: 55 + 2^{0}C

Relative Humidity: 50% at 35^{0}C

Duration: 4 hours.

COPY RIGHT AND CONFIDENTIAL
THE INFORMATION ON THIS DOCUMENT IS THE PROPERTY OF BHARAT HEAVY ELECTRICALS LIMITED. IT MUST NOT BE USED DIRECTLY OR INDIRECTLY IN ANY WAY DETRIMENTAL TO THE INTEREST OF THE COMPANY.

Damp heat test (cyclic) for PCB & sub assembly
Damp heat (cyclic) test as per IS-9000 Part V/ Section 2
Test must be conducted at the conditions mentioned below:
Upper Temperature: 40 + 2 ^{0}C
Relative Humidity : 90% (minimum)
Lower Temperature: 25 + 3 ^{0}C, 98% RH
Relative Humidity : 95% (minimum)
Each cycle is of 12 hours + 12 hours duration
Number of cycles: 2

8.3.2 Temperature rise test by connecting 100% load to DCPS and recording temperature rise by mounting sensors on transformers, choke, SCR heat sink and diode heat sink at 220V DC & 235V DC with doors closed.

8.3.3 EMC test
EMC test shall be conducted on one DCPS.
8.3.4 Preparation and submission of documentation ~~covering reliability analysis, stress analysis, identification of age related and non age related degraded components as per IEEE-650.~~
8.3.5 ~~Performance of stress test as per IEEE-650.~~
8.3.6 Branch circuit MCB clearance test: The DCPS shall be loaded at rated load at the output. The DCPS shall be capable of isolating a short circuit in branch circuit through a MCB of 20A, 'C2' curve without tripping the DCPS.

8.4 Test Certificates
8.4.1 All routine and type test certificates including records, performance curves etc. shall be supplied according to the distribution schedule.
8.4.2 The Supplier shall ensure that instruments and gauges to be used for testing and inspection have rated calibration and the accuracy can be traced to National / International Standards.CPS shall be kept on load continuous for a period of 100 hours at nominal input voltage & full output load.

8.5 Tests to be carried out at site
The following tests shall be conducted at site on DCPS as per standards specified. These are however not intended to form a comprehensive commissioning check list as it shall be the Supplier's responsibility to draw up and carryout such a programme after obtaining the Purchaser's approval.
Following typical checks to be carried out at site:

8.5.1 Preliminary Checks
a. Check name plate details of all associated equipment according to specification.
b. Check for physical damage.
c. Check tightness of all bolts, clamps and connecting terminals.
d. Check cleanliness.
e. Check earthing.
f. Check for Lamps, Sockets etc.
g. Check for general layout.
h. Check provision of all protective relays, meters and transducers as per drawing.
i. Check for proper mounting of power devices like thyristors, Diodes etc. on heat sinks.

COPY RIGHT AND CONFIDENTIAL
THE INFORMATION ON THIS DOCUMENT IS THE PROPERTY OF BHARAT HEAVY ELECTRICALS LIMITED. IT MUST NOT BE USED DIRECTLY OR INDIRECTLY IN ANY WAY DETRIMENTAL TO THE INTEREST OF THE COMPANY.

8.5.2 Commissioning Checks

a. Each wire shall be traced by continuity tests and it should be made sure that the wiring is as per relevant drawings. All interconnection between panels / equipment shall be similarly checked.
b. All the wired terminals shall be meggered to earth.
c. Megger test between bus bars and bus bars to earth.
d. Settings of relays, MCCBs, other alarms tripping devices and interlocks as per scheme.
e. Functional checking of all control circuits including float, equalise and boost conditions, metering and relay circuits.
f. Insulation resistance test of all circuits.
g. Measurement of voltage regulation.
h. No load current and voltage (AC) and voltage and current (both AC. and DC.) at different loads.
i. Measurement of harmonics injected in to the system for different loading conditions.
j. Measurements of output voltage ripple contents.
k. Checking of battery current limit setting and verification of rectifier control circuitry under various conditions of operation.
l. Test for diode voltage regulator operation.
m. N/A.
n. All interlocks and sequence operation of circuits such as indications on front panel, alarms and trips shall be shown.
o. Functional tests on rectifiers control circuitry.

9.0 PACKING AND SHIPMENT:

The DCPS shall be so packed as not to suffer deterioration damage or breakage during shipment. Packing should be such that the ingress of moisture, dirt and other foreign material can be avoided. Packing method shall be adequate to withstand a period in transit for more two months and storage at site under tropical climate for minimum period of one year without suffering any damage or deterioration. Each package shall be properly labeled to indicate the type and quantity of material it contains, purchase order number, dimensions, weight and any other necessary data to identify the equipment and relate it to the contract. All bolts, nuts, plates, and other small parts shall be shipped in separate boxes. All projecting connections shall be adequately blocked and protected to prevent damage during shipment. The packing of panel shall preferably be done using suitable thickness of plywood.

10.0 INFORMATION REQUIRED WITH THE BID

The bidders shall submit all supporting information and technical data/drawings requested in this specification to permit the evaluating engineer to make a detailed comparison and evaluation of the tenders without the need of the request for further information from the bidder.

Bids which are not consisting of the essential information as mentioned below will not be considered.

1. Annexure-A gives the formats for submission of the technical bid. These annexure shall be filled in fully and shall make the essential part of the proposal of the bidders.
2. The bidder shall submit a brief list of work executed by him to standards and requirements specified in the tender document.
3. The supplier must state the mode of transportation whether by rail of by truck, and what measures will be taken to ensure that the equipment will not be damaged in transit.

COPY RIGHT AND CONFIDENTIAL

THE INFORMATION ON THIS DOCUMENT IS THE PROPERTY OF BHARAT HEAVY ELECTRICALS LIMITED. IT MUST NOT BE USED DIRECTLY OR INDIRECTLY IN ANY WAY DETRIMENTAL TO THE INTEREST OF THE COMPANY.

TECHNICAL SPECIFICATION OF DCDB

REVISION: 00

APPROVED

RAJASEKAR K

PREPARED	ISSUED	DATE
AMIT KR SHARMA	416	29 / 8 /15

COPY RIGHT AND CONFIDENTIAL
THE INFORMATION ON THIS DOCUMENT IS THE PROPERTY OF BHARAT HEAVY ELECTRICALS LIMITED. IT MUST NOT BE USED DIRECTLY OR INDIRECTLY IN ANY WAY DETRIMENTAL TO THE INTEREST OF THE COMPANY.

1.0 SCOPE

The scope of this specification covers the design, manufacture, testing, guarantee, supply, delivery and commissioning of DCDB.

2.0 CONTENTS :

Requirements of this specification are resented under following section headings:

Description	Section
Applicable standards, specifications and drawings.	3
Materials and workmanship.	4
General functions and description.	5
Design requirements.	6
Inspection and reports	7
Tests	8
Packing and Shipment	9
Information required with the bid	10
Technical particulars required with the BID	Annexure – A
Quality Assurance Plan (Sample)	Annexure – B

3.0 APPLICABLE STANDARDS, SPECIFICATIONS AND DRAWINGS

All documents listed below constitute a part of this specification. In the event that certain requirements of specifications, drawings or data listed below conflict with the requirements of specification, the requirements of this specification shall govern.

3.1 Applicable Standards

IS-5578	Guide for marking of insulated conductors.
IS-8573	Digital DC voltmeters and DC electronic analogue to digital converters
IS/IEC-60898	Electrical Accessories - Circuit-Breakers for Over current Protection for Household and Similar Installations
IS-694	PVC Insulated cables for working voltages upto and including 1100 V
IS-1248	Direct acting electrical indicating instruments
IS-13703 IS-5553	HRC cartridge fuse links up to 650V Reactor
IS-2628	Rotary wafer switches
IS-8872 Part – 1	Non wire wound variable resistors (potentiometers)
IS-3156	Voltage transformers
IS-8909	Wire wound resistors
IS-3961	Recommended current ratings for cables
IS-4007	Terminals for electronic equipment
IS/IEC-60947-3	Heavy duty air break switches and composite units of air break switches and fuses for voltages not exceeding 1000V AC or 1500V DC.
IS-14901	Methods of measurement on semiconductor devices
IS-4540	Monocrystalline semiconductor assemblies and equipment
IS-5469	Code of practice for use of semiconductor function devices
IS/IEC-60947-1	General requirements for switchgear and control gear for voltage not exceeding 1000V.
IS/IEC-60947-2	Moulded case circuit breakers Relays Transistor Capacitor
IS-5051	Relay
IS-14901	Thyristors
IS-590	Capacitor
IS-5	Colours for Ready Mixed Paints and Enamels.

COPY RIGHT AND CONFIDENTIAL
THE INFORMATION ON THIS DOCUMENT IS THE PROPERTY OF BHARAT HEAVY ELECTRICALS LIMITED. IT MUST NOT BE USED DIRECTLY OR INDIRECTLY IN ANY WAY DETRIMENTAL TO THE INTEREST OF THE COMPANY.

IS-9000-Part-III	Basic environmental testing procedure for electronic and electrical items: Dry heat test.
IS-9000-Part-IV	Basic environmental testing procedure for electronic and electrical items: Damp heat (cyclic) test.
IS-4000	High strength bolts and steel structures.
IS-737	Wrought aluminum and aluminum alloy sheets and strips for general engineering purposes.
~~IEEE-344~~	~~Recommended practices for seismic qualification of Class 1E equipment for Nuclear Power Generating Stations.~~
MIL-STD-285	Attenuation measurements for enclosures, Electromagnetic shielding for electronic test purposes
IEEE-299	IEEE standard method for measuring the effectiveness of electromagnetic shielding enclosures.
IEC-61000-5-7-2001	Installation and mitigation guidelines- Degrees of protection provided by enclosures against electronic disturbances (EM code) (10KHz to 40GHz).

3.2 Applicable Specifications

~~PC-E-249~~	~~Technical specification for ground fault detection system.~~
~~PC-E-248~~	~~Technical specification for MCB status monitoring system.~~
PC-E-410	Technical specification for screw clamp type and screw less spring clamp type terminal blocks and accessories for non radiation area.
PP-E-2061	Specifications for requirements of components /equipment for instrumentation items.
PC-E-793	Guidelines for Derating of electronic components
PC-E-710	Engineering Standard for Electromagnetic Compatibility Qualification of C&I Equipment

5.0 GENERAL FUNCTION AND DESCRIPTION

5.1 Function of class I 220V DCDB panel is to distribute 220V DC to DDCMIS panels, to supply flasher power to indicating lamps, to detect the ground fault as well as to monitor the status of all Miniature Circuit Breakers (MCBs) mounted in these power supply distribution panels.

Technical requirements of MCB, Moulded Case Circuit Breaker (MCCB), handswitches, indicating meter and indicating lamps mounted in various MCPSD panels are given in section no. 6.6 of this specification.

~~Technical requirements of the ground fault detection system are covered in NPCIL specification no. PC-E-249.~~

~~Technical requirements of the MCB Status Monitoring System (MCB SMS) are covered in NPCIL specification no. PC-E-248.~~ Each panel shall house the Local Control Module (LCM) and auxiliary contact of each MCB shall be wired to LCM of MCB SMS. MCCPSD shall be able to work satisfactorily under the environmental conditions mentioned in earlier sections of charger.

5.2 Description of 220V DCDB Panels

220V DC Main buses shall be provided with green indicating lamps and shall be equipped with Earth Fault Sensor (EFS). Scanner shall be provided for monitoring the EFSs. Insulation monitoring device and Scanner shall be provided with common hand switch for temporary isolation. 220V DC buses should be equipped with 2 pole Moulded Case Circuit Breakers (MCCB) rated as per suitable charger rating (refer feeder list). Miniature circuit breakers (MCBs) of various ratings (as mentioned in feeder list) shall be mounted in DCDB panel. All the sub-buses (if any) shall be provided with “no voltage” relays. Contacts of these no voltage relays initiate no voltage alarm in control room thru DCS system.

COPY RIGHT AND CONFIDENTIAL
THE INFORMATION ON THIS DOCUMENT IS THE PROPERTY OF BHARAT HEAVY ELECTRICALS LIMITED. IT MUST NOT BE USED DIRECTLY OR INDIRECTLY IN ANY WAY DETRIMENTAL TO THE INTEREST OF THE COMPANY.

6.6 Equipment

6.6.1 Miniature Circuit Breakers

a. Sub-bus Miniature Circuit Breakers (MCB): 220V DC miniature circuit breakers shall be of 2 poles. They shall have one change over auxiliary contact rated for 0.5 A at 220V DC. These MCBs supply power to mixed loads such as relays, lamps and solenoid valves. Therefore, tripping characteristics shall be of medium delay (C characteristic). MCBs shall have breaking capacity of 1 KA. MCBs shall be fitted with mechanical „ON‟ and „OFF‟ indicators. MCB shall be generally as per IS/IEC-60898. Insulation resistance shall be more than 100 mega ohms at 500V DC.

b. Bus Circuit Breakers (CB): 220V DC moulded case circuit breakers (MCCB) shall be 2 pole without any auxiliary contact. Tripping characteristic shall be of medium delay („C‟ characteristic). MCCB shall have breaking capacity of 5 KA. CBs shall be fitted with mechanical „ON‟ and „OFF‟ indicators. MCCBs shall be generally as per IS/IEC-60947-2. Tripping characteristics of these bus MCCBs shall be coordinated such that the down stream MCBs shall trip upon occurrence of fault at down stream with out affecting these bus MCCBs. Also the up stream MCCBs shall be of higher rating to prevent them from tripping before these bus MCCBs trip. Insulation resistance shall be more than 100 mega ohms at 500V DC.

6.6.2 Hand Switches : Hand switches shall be 1 A rated at 220V DC.

6.6.3 Indicating Meters All meters shall be LED 7 segment digital type of size approximately 48 x 96 mm and shall be suitable for flush mounting. Zero adjustment shall be possible from front side. Meters for AC voltage, DC current measurement shall be 4 and ½ digits while meters for AC current and DC voltage shall be 3 and ½ digits. Accuracy of meters shall be 1% full scale or better. All voltage circuits of meters shall have fuses. Meters shall comply IS: 8573.

6.6.4 Indicating Lamps Indicating lamps shall be LED assemblies and of low voltage type. Series resistors / rectifiers for DC / AC may be fitted if required.

6.6.5 Bus Bars Bus bars shall be of electrolytic grade copper and shall have continuous current carrying capacity of suitable for charger rating specified in feeder list. Bus bars shall be rigidly braced to withstand the fault currents. Bus bar and link joints shall be made as per the latest modern practice. All joints as far as possible shall be bolted type. Supports used for the bus bars shall have adequate thickness and strength to withstand thermal, electrical and mechanical stresses during short circuits and they should be suitable for terminating cable of size as specified in feeder list. Bus bars for terminating incoming cables shall be placed horizontally. Marking and arrangement of bus bars shall conform to IS: 5578. Temperature at any point on the bus bar shall not exceed 85DegC during continuous operation at rated current at 45Deg C ambient.

6.6.6 Control Equipment

6.6.6.1 Semi-conductors: Refer charger specfication section cl 6.5.2

6.6.6.2 Control Fuses : All control fuses for the protection shall be slow blow type Category 1A long life grade suitable for 85Deg C operation.

6.6.6.3 Capacitors : Preferably all capacitors shall be tantalum.

6.6.6.4 Terminal Blocks: Terminal blocks shall be of Polyamide (nylon 6.6) and brass clamping yoke. Fire rating shall be V0 as per UL-94. Current bar shall be of copper alloy.

6.6.6.5 Resistors

All resistors shall be preferably metal oxide type and in general shall not be rated more than 50% of the manufacturer's rating. Potentiometer shall be used wherever wide range voltage and current adjustments are necessary.

COPY RIGHT AND CONFIDENTIAL
THE INFORMATION ON THIS DOCUMENT IS THE PROPERTY OF BHARAT HEAVY ELECTRICALS LIMITED. IT MUST NOT BE USED DIRECTLY OR INDIRECTLY IN ANY WAY DETRIMENTAL TO THE INTEREST OF THE COMPANY.

6.6.6.5 Resistors
All resistors shall be preferably metal oxide type and in general shall not be rated more than 50% of the manufacturer's rating. Potentiometer shall be used wherever wide range voltage and current adjustments are necessary.

6.6.6.6 Relays
All relays shall be compact, sealed to provide maximum reliability and shall be free from contact deterioration. Relays shall have 2 C/O contacts. The rating of contact for shall be 2 A. All relays shall be instantaneous and plug in type.

6.6.6.7 Monitor Points: Monitor points shall be provided for rapid fault finding.

6.6.7 Printed Circuit Boards: Refer charger specfication section cl 6.8.4.

6.6.8 Ground Fault Detection: ~~Ground fault detection shall be as per specification no. PC-E-249~~. The supplier shall mount the GFD system suitably on the panels, wire and integrate with main charger panels and ensure proper functions of the GFD system.

6.6.10.3 Housing and Foundation : In its proposed location, panel shall have access from its front as well as rear. Suitable gland plates of minimum 2.5 mm thickness shall be provided for cable entry. Cable entry shall be from bottom of the panel. Refer charger specification section 6.8.5

6.6.10.4 Compartment doors and barriers Barrier between compartments shall be designed such that it is not possible to accidentally touch live parts in adjacent compartment while working on equipment in a particular compartment. All doors shall be provided with good quality industrial locks and handles. Hinges shall be concealed type. Doors shall be provided with sponge gaskets for effective dust proofing. Doors shall open only 90 degree. All locks of doors of panels shall have a common key.

6.6.10.5 Enclosure ventilation and illumination Enclosure shall be natural cooled for heat dissipation. Refer charger specfication section cl 6.8.7

6.6.10.6 Cable supports and arrangements
Cable entry shall be from bottom. Suitable termination arrangements shall be provided including cable lugs and supports inside the CCPSD panels. The cable lugs shall be of the crimping type tinned copper. All internal power wiring shall have crimped lug termination. Mounting boards for various control circuits and sub assemblies shall be of adequate thickness to withstand electrical and mechanical stress and vibration.

6.6.10.7 Wiring and Terminations
a. Wire: All small wires shall be stranded copper conductor PTFE insulated, run in plastic wiring channel. Small wiring including instrument transformer secondary wiring shall be 2.5 sq. mm minimum and shall be supplied in accordance with specifications and rating of the charger. Wire size for electronic control shall suit the electronic components used. Wiring affected by stray electromagnetic fields shall be suitably shielded.
b. Terminal Blocks: Terminal blocks shall be screw type. Terminal blocks connected with MCBs of 6A and below shall be 4 sq. mm. TBs connected with 10A, 15A circuit breakers shall be 25 sq. mm. for circuit breakers of 25A and above terminals of 35 sq. mm size shall be provided to terminate the cables. For other control circuits 4 sq. mm TBs shall be used. TBs shall be suitably mounted to allow easy access. TBs shall be grouped by services and segregated according to circuit voltage and field destination. 20% spare terminals suitably distributed shall be provided. Connection to TBs shall be easily removable for testing purposes. TBs shall be mounted not less than 250mm below the top cover.

COPY RIGHT AND CONFIDENTIAL
THE INFORMATION ON THIS DOCUMENT IS THE PROPERTY OF BHARAT HEAVY ELECTRICALS LIMITED. IT MUST NOT BE USED DIRECTLY OR INDIRECTLY IN ANY WAY DETRIMENTAL TO THE INTEREST OF THE COMPANY.

c. Wiring and terminations: All wire terminations shall be made with ring torque compression type connectors which firmly grip the conductors and preferably insulated compressions sleeves to grip the wire insulation. Soldering of connections in electronic circuits shall be of the highest quality. While soldering adequate care shall be taken that electronic components are not damaged. Wiring between terminals of various devices shall be point to point (no wire splicing or 'T' connections) with wire trunked. It shall be so arranged that instruments or devices may be removed and / or serviced without unduly disturbing the wiring. Each wire shall be identified at both ends with wire nos. corresponding to the number shown on the supplier's drawings. Wire markers used shall be non-deterioration type. Wire shall be run away from all heat generating components. All control wiring shall be adequately segregated and protected from faults on the power circuits. Provisions shall be made for grounding voltage transformer neutrals if required.

6.6.10.8 Ground Bus Safety: Refer charger specification section 6.8.6

6.6.10.9 Painting Procedure, Equipment Identification: Refer charger specfication section 6.8.10

6.8 Tropicalization The supplier shall provide details of qualification with regard to tropicalisation of a. Wire b. Terminal blocks c. Circuit Breakers d. Miniature circuit breakers.

6.11.1 Supplier's Drawings Supplier shall forward preliminary drawings of the systems to the purchaser within 8 weeks from the time requisition is issued. These drawings shall include general arrangement, bill of materials, weights, outline dimensions, schematic and wiring diagrams. Following drawings for approval and /or information shall be submitted to the purchaser:

1. General arrangement drawing showing the locations of all equipment and dimensions of panels
2. Bill of material for approval
3. Foundation drawings of panels for approval.
4. Schematic drawings for approval
5. Spares list for approval
6. Name plate details for approval
7. Wiring diagrams for information and records.

Whereas following documents have to be sent to purchaser at appropriate stage of system execution.

1. Test procedure for approval
2. Test reports – 5 copies
3. Instruction manuals – 10 copies
4. Quality Assurance Plan (QAP) for approval

Five copies of history docket both hard copy and softcopy shall be furnished. History docket shall be made as per PRD-PROC-19. A sample history docket shall be submitted to the purchaser for clearance. Once purchaser clears the sample, 5 copies of history dockets shall be submitted both in hardcopy and softcopy form. Supplier, before commencing with fabrications shall prepare and submit to the purchaser for approval four complete sets of shop drawings which shall show the fabrication details. These drawings when approved in writing by the purchaser shall form part of this specification. After said drawings have been approved, the supplier shall furnish five additional complete sets of all final drawings, including all subsequent revisions approved by the purchaser in both hard & soft form.

6.11.2 Test Procedure Supplier shall submit test procedure for purchaser"s approval well in advance before starting testing. Equipment shall be tested as per approved test procedure.

COPY RIGHT AND CONFIDENTIAL
THE INFORMATION ON THIS DOCUMENT IS THE PROPERTY OF BHARAT HEAVY ELECTRICALS LIMITED. IT MUST NOT BE USED DIRECTLY OR INDIRECTLY IN ANY WAY DETRIMENTAL TO THE INTEREST OF THE COMPANY.

6.11.3 Sub-Contractors: Normally supplier shall not sub-contract any or all of the work involved in execution of the system. In exceptional cases, supplier shall take written permission from the Purchaser for sub-contracting. Supplier shall be responsible to the purchaser for all work of any sub-contractor allowed by the purchaser.

7.0 INSPECTION & REPORTS : Refer charger specification section 7.0

8.0 TESTS

The manufacturer shall carryout tests to show that the equipment has been satisfactorily designed and manufactured and performs to the standards required by this specification. If some tests mentioned cannot be carried out at supplier‟s works, the same shall be carried out at site. In such a case, the supplier shall indicate the procedure of the test. If the equipment does not pass the test, it shall be the supplier‟s responsibility at his cost. Any special equipment required for testing, like meters or relays, etc. if not available at purchaser's site office shall be supplied by the supplier.

8.1 Component Testing All components/equipment/sub-assemblies to be used in Main Control Centre Power Supply Distribution (MCCPSD) panels shall be subjected to visual, mechanical, electrical and functional tests. The test results shall be documented and submitted to customer QA engineer for review. Details of the tests to be conducted shall be listed in Quality Assurance Plan to be submitted by the supplier based on enclosed sample QAP after award of contract. The components to be tested are shown below. Supplier shall test all the components/equipment/sub-assemblies used and not necessarily only the components listed below.

List of Components to be tested

1. Indicating lamps
2. Circuit breakers
3. Hand switches
4. Fuses
5. Volt meters
6. Ammeters
7. Cables
8. PTFE wires
9. Miniature circuit breakers
10. Flasher circuit

10.1 Resistors

10.2 Capacitors

10.3Relays 10.4PCB 10.5Semiconductor components & ICs

11. Insulation Monitoring Device(IMD)
12. Scanner
13. Earth Fault Sensor(EFS)
14. MCB Status Central Processing and Display(MSCPD)
15. Local Control Module(LCM)
16. MCB Status Remote Display(MSRD)

8.2 Tests on complete system The following tests shall be conducted on the complete Main Control Centre Power Supply distribution (MCCPSD) panels:

COPY RIGHT AND CONFIDENTIAL
THE INFORMATION ON THIS DOCUMENT IS THE PROPERTY OF BHARAT HEAVY ELECTRICALS LIMITED. IT MUST NOT BE USED DIRECTLY OR INDIRECTLY IN ANY WAY DETRIMENTAL TO THE INTEREST OF THE COMPANY.

8.2.1 Routine Tests

1. Connection checking & overall dimension checking.
2. Insulation resistance test on complete panel.
3. High Voltage test on complete panel.
4. Indications & alarm function.
5. Operation of no voltage test.
~~6. Ground fault detection system as per specification no. PC-E-249.~~
~~7. MCB status monitoring system as per specification no. PC-E-248.~~
8. Flasher Unit as per NPCIL approved test procedure

8.2.2 Acceptance Test

8.2.2.1 Connection checking and overall dimension checking.
8.2.2.2 Insulation test on complete panel.
8.2.2.3 High voltage test on complete panel.
8.2.2.4 Indication & alarm contact function.
~~**8.2.2.5** Ground fault detection system as per specification no. PC-E-249~~
~~**8.2.2.6** MCB status monitoring system as per specification no. PC-E-248~~
8.2.2.7 Flasher Unit as per NPCIL approved test procedure.
8.2.2.8 Functional test on panels

8.2.3 Special type tests: Environmental Tests- Refer specification of charger section 8.3

8.2.4 Test Certificates 8.2.4.1 All routine and type test certificates including records, performance curves etc. shall be supplied according to the distribution schedule.
8.2.4.2 The Supplier shall ensure that instruments and gauges to be used for testing and inspection have rated calibration and the accuracy can be traced to National / International Standards.
8.2.5 Tests to be carried out at site The following tests shall be conducted at site on MCCPSD panels as per standards specified. These are however not intended to form a comprehensive commissioning check list as it shall be the Supplier's responsibility to draw up and carryout such a programme after obtaining the Purchaser's approval. Following typical checks to be carried out at site:

8.2.5.1 Preliminary Checks

a. Check name plate details of all associated equipment according to specification.
b. Check for physical damage.
c. Check tightness of all bolts, clamps and connecting terminals.
d. Check cleanliness.
e. Check earthing.
f. Check for Lamps, Sockets etc.
g. Check for general layout.
h. Check provision of all MCBs, MCCBs, relays, meters, GFD devices, MCB SMS devices etc. as per drawing.

8.2.5.2 Commissioning Checks

a. Each wire shall be traced by continuity tests and it should be made sure that the wiring is as per relevant drawings. All interconnection between panels / equipment shall be similarly checked.
b. All the wired terminals shall be meggered to earth. c. Megger test between bus bars and bus bars to earth. d. Settings of relays, MCBs, other alarms tripping devices and interlocks as per scheme. e. Functional checking of all control circuits including metering and relay circuits. f. Insulation resistance test of all circuits. g. Functioning of GFD and MCB SMS.

9.0 PACKING AND SHIPMENT: Refer charger specification section 9.0

COPY RIGHT AND CONFIDENTIAL

THE INFORMATION ON THIS DOCUMENT IS THE PROPERTY OF BHARAT HEAVY ELECTRICALS LIMITED. IT MUST NOT BE USED DIRECTLY OR INDIRECTLY IN ANY WAY DETRIMENTAL TO THE INTEREST OF THE COMPANY.

ANNEXURE-A

TECHNICAL COMPLIANCE SHEET FOR CHARGER TO BE FILLED BY PARTICIPATING VENDORS AND SUBMITTED ALONG WITH TECHNICAL BID

REVISION: 00

APPROVED		
RAJASEKAR K		
PREPARED	ISSUED	DATE
AMIT KR SHARMA	416	29 / 8 /15

ANNEXURE – A

TECHNICAL PARTICULARS REQUIRED WITH THE BID

1.0 TECHNICAL DATA TO BE SUPPLIED ALONGWITH THE TENDER

Bidders shall submit with their bids a complete description of all equipment on which their bid is based and such description shall include the details given hereunder. It is necessary that all details shall be completely filled in the first instance to evaluate the bid and compare it with other offers.

Bids with incomplete or ambiguous information shall not be considered.

The details hereunder shall be completed in all respects and reference to other places shall be avoided as far as possible.

All ratings indicated by the bidder shall be at specified ambient conditions.

1.1 Complete Equipment

1.1.1	Manufacturer‟s Name	----------	---------
1.1.2	Type reference	----------	---------
1.1.3	Nominal Ratings	----------	---------
1.1.3.1	Input voltage	----------	---------
1.1.3.2	Output voltage	----------	---------
1.1.3.3	Output current	----------	---------
1.1.4	Output DC Voltage Range	----------	---------
1.1.5	Output voltage regulation at 2.2V DC float & boost voltage at 2.4V DC per cell respectively.	----------	---------

1.1.5.1	Steady state	----------
1.1.5.2	Transient state variation for sudden application and removal of 100% load.	----------
1.1.6	Recovery time of voltage from transient condition to rated voltage	----------
1.1.7	Ripple content in DC output for full load at nominal input/output voltage with battery disconnected.	----------
1.1.8	Efficiency at full load and nominal input/output voltage	----------
1.1.9	Boost charging current limit adjustable range	Yes/No
1.1.10	Equalize charging current limit adjustable range	Yes/No
1.1.11	Is diode voltage regulator as Per section no. 6.2.1 provided?	----------
1.1.12	Harmonics injected into mains because of DCPS	----------
1.1.13	Power factor at the input of charger.	----------
1.1.14	Is cable entry from top?	----------
1.1.15	Weight of complete DCPS	----------
1.1.16	Overall size of DCPS	----------
	Width x depth x height (in mm)	----------

1.1.17 Ambient temperature and humidity at which DCPS can operate satisfactorily. ----------

1.1.18 Method of cooling Natural or Forced

1.1.19 a) Whether details of painting procedure and painting tests are enclosed? Yes/No

1.1.20 b) Colour of finish paint

Outside ----------

Inside ----------

1.1.21 Noise level of DCPS ----------

1.1.22 Short time current withstand rating at D.C. output. ----------

1.1.23 Standard power frequency insulation withstand for one minute. ----------

1.1.24a) Mean time between failure of Complete equipment. ----------

b) Device having lowest MTBF. ----------

1.1.25 Earth Bar

Is it made of copper and 150 Sq. mm? Yes/No

1.1.26 Can the electronic components be subjected to burn in test before use? Yes/No

1.1.27	Is the equipment fully Tropicalized?	Yes/No
1.1.28	Do all equipment used Independently support Combustion.	---------
1.1.29	Is mimic diagram provided?	---------
1.1.30	Over load capacity.	----------

1.2 Housing

1.2.1	Thickness of sheet steel.	-----MM
1.2.2	Is sheet steel cold rolled ?	Yes/No
1.2.3	Are ventilation louvers provided?	Yes/No
1.2.4	Are ventilation louvers screened?	Yes/No
1.2.5	Is the enclosure rigid, free floor standing?	Yes/No
1.2.6	Are non magnetic flanges for input AC cable entry provided?	Yes/No
1.2.7	IP Number of the housing as per IS:60947.	----------

1.3 List of recommended spares for five years operation.

1.4 Tests

1.4.1 Tests mentioned in section 8.0 will be Performed including EMC testing. Yes/No

1.4.2.1 By testing only? Yes/No

1.4.2.2 Where will seismic testing be conducted? ----------

1.4.3 ~~Whether DCPS qualified as per IEEE-650 Yes/No~~

1.4.4 Which tests are proposed to be done at site? (List the number given in Specification)

1.5 List of deviations enclosed. Yes/No

1.6 Schematic diagram of DCPS enclosed. Yes/No

1.7 Delivery schedule

Schedule in weeks after placement of orders:

1.7.1 Submission of drawings, QA plan, test : procedures

1.7.2 Time allowed for approval by purchaser:

1.7.3 Complete fabrication of first 220V DCPS :

1.7.4 Schedule for completion of routine tests:

1.7.5 Schedule for completion of special type: tests

1.7.6 Production schedule of balance 220V DCPS:

1.7.7 Schedule for inspection, testing and delivery at site of all equipment for first unit. :

1.7.8 Schedule for manufacture, inspection, testing and delivery at site of all equipment for second unit. :

1.7.9 Time required for erection of all equipment and keeping ready for commissioning :

1.7.10 Time required for conducting site test :

2.0 TENDER DRAWINGS

The Bidder shall list the tender drawings which are being submitted along with the bid. A general arrangement drawing showing main equipment layout, general features, overall dimensions, wiring arrangement etc, must accompany the bid.

3.0 TIME REQUIRED BY SUPPLIER

The supplier must state the period required for the preparation of drawings and the time he has allowed for approval of the drawings by the purchaser in the delivery period specified.

4.0 TRANSPORTATION

The supplier must state the mode of transportation whether by rail of by truck, and what measures will be taken to ensure that the equipment will not be damaged in transit.

5.0 PROOF OF ABILITY

The bidder shall submit a brief list of work executed by him to standards and requirements specified in the tender document.

6.0 DEVIATIONS FROM SPECIFICATIONS

Any deviations in test procedure from this specification.

Any deviation in items offered.

COPY RIGHT AND CONFIDENTIAL

THE INFORMATION ON THIS DOCUMENT IS THE PROPERTY OF BHARAT HEAVY ELECTRICALS LIMITED. IT MUST NOT BE USED DIRECTLY OR INDIRECTLY IN ANY WAY DETRIMENTAL TO THE INTEREST OF THE COMPANY.

ANNEXURE-B

QAP FOR CHARGER

(The QAP is subject to approval)

REVISION: 00

APPROVED

RAJASEKAR K

PREPARED	ISSUED	DATE
AMIT KR SHARMA	416	29 / 8 /15

ANNEXURE - B

QUALITY ASSURANCE PLAN FOR 220V DC MAIN BATTERY CHARGERS (SAMPLE)

Sl. No	Components and Operations	Characteristics	Class	TYPE OF CHECK	QUANTUM OF CHECK	REFERENCE DOCUMENT	ACCEPTANCE NORMS	FORMAT OF RECORDS	AGENCY			REMARKS
									P	W	V	
1.	Component Screening	Visual	C	Verification	Sample	NPCIL spec. PC-E-251	NPCIL spec. PC-E-251	TC	2	2	1	
		Burn-in Test	C	Operational	Sample							
		Electrical Test	C	Measurement	Sample							
		Functional Test	C	Performance	Sample							
2.	Power Transformer	Dimensions	B	Measurement	100%	IS-11171	IS-11171 Class of insulation as per NPCIL spec.	TR	2	2,1	1	CHP
		Voltage ratio	B	Measurement	100%							
		Impedance voltage and load loss	C	Measurement	100%							
		No load current & loss	C	Measurement	100%							
		Insulation resistance	C	Measurement	100%							
		Dielectric strength	C	Measurement	100%							
		Temp. rise	C	Measurement	Sample							
		Double freq. Double voltage withstand test	C	Measurement	Sample							
3.	Series Reactor	Dimension	B	Measurement	Sample	IS-5553	IS-5553	TR	2	2	1	
		Inductance value	B	Measurement	Sample							
		Insulation resistance	C	Measurement	Sample							
		Dielectric strength	C	Performance	Sample							
		Temp. rise	C	Measurement	Sample							
		Double freq. Double voltage withstand test	C	Performance	Sample							
4.	Control Transformer / Pulse Transformer	Dimension	B	Measurement	Sample	IS-3156	IS-3156	TC	2	2	1	
		Terminal	B	Verification	Sample							
		Marking & Polarity	C	Measurement	Sample							
		Voltage ratio	C	Measurement	Sample							
		No load current	C	Measurement	Sample							
		Insulation resistance	C	Measurement	Sample							
		Dielectric strength	C	Performance	Sample							

ANNEXURE - B

QUALITY ASSURANCE PLAN FOR 220V DC MAIN BATTERY CHARGERS (SAMPLE)

Sl. No	Components and Operations	Characteristics	Class	TYPE OF CHECK	QUANTUM OF CHECK	REFERENCE DOCUMENT	ACCEPTANCE NORMS	FORMAT OF RECORDS	AGENCY			REMARKS
									P	W	V	
5.	Contactors	Visual	A	Verification	Sample	IS-60947	IS-60947	TC	2	2	1	
		Dimensions	B	Measurement	Sample	Manufacturer"s						
		Operation	C	Performance	Sample	catalogue						
		(pick up /dropout)										
		Type no/Marking	C	Verification	Sample							
		Insulation resistance	C	Measurement	Sample							
		Dielectric strength	C	Measurement	Sample							
6.	Moulded Case Circuit Breaker/ MCB	Visual	A	Verification	Sample	Manufacturer"s	IS-2516	TC	2	2	1	
		Dimension	B	Measurement	Sample	Spec.	IS-60898					
		Operation	B	Performance	Sample	IS-2516						
		Type no./Marking	C	Verification	Sample	IS-60898						
		Tripping characteristics	C	Measurement	Sample							
		Insulation resistance	C	Measurement	Sample							
		Dielectric strength	C	Performance	Sample							
7.	Fuses	Dimension	A	Measurement	Sample	Manufacturer"s	IS-13703	TC	2	2	1	
		Type no./Marking	C	Verification	Sample	Spec.						
		Continuity	C	Verification	Sample							
8.	Fuse holders	Visual	A	Verification	Sample	Manufacturer"s	Manufacturer"s	TC	2	2	1	
		Dimension	A	Measurement	Sample	Spec.	spec.					
		Type no./marking	C	Verification	Sample							
		Insulation resistance	C	Measurement	Sample							
		Dielectric strength	C	Performance	Sample							
9.	Switches (slelect or/push button)	Visual	B	Measurement	Sample	Manufacturer"s	IS-6975	TC	2	2	1	
		Dimension	C	Verification	Sample	Spec.	IS-4794					
		Operation	C	Performance	Sample	IS-6975						
		Type no./marking	C	Verification	Sample	IS-4794						
		Insulation resistance	C	Measurement	Sample							
		Dielectric strength	C	Performance	Sample							

QUALITY ASSURANCE PLAN FOR 220V DC MAIN BATTERY CHARGERS (SAMPLE)

Sl. No	Components and Operations	Characteristics	Class	TYPE OF CHECK	QUANTUM OF CHECK	REFERENCE DOCUMENT	ACCEPTANCE NORMS	FORMAT OF RECORDS	AGENCY			REMARKS
									P	W	V	
10.	Printed Circuit Board	Dimension	B	Measurement	100%	PP-E-1443	PP-E-1443	TC	2	2	1	
		Continuity	C	Verification	100%							
		Solderability	C	Verification	Sample							
		Insulation resistance	C	Measurement	Sample							
		Dielectric strength	C	Performance	Sample							
		Peel strength	C	Measurement	Sample							
11.	Meters	Visual	A	Verification	Sample	Manufacturer"s Spec. IS-1248 / IS-8573	IS-1248 / IS-8573	TC	2	2	1	
		Dimension	B	Measurement	Sample							
		Type no./marking	C	Verification	Sample							
		Accuracy	C	Measurement	Sample							
		Insulation resistance	C	Measurement	Sample							
12.	Current Transformer	Dimension	B	Measurement	Sample	Manufacturer"s Spec. IS-2705	IS-2705	TC	2	2	1	
		Terminal	B	Verification	Sample							
		Marking & polarity										
		Turns ratio	C	Measurement	Sample							
		Insulation resistance	C	Measurement	Sample							
		Dielectric strength	C	Performance	Sample							
13.	Relays	Dimension	B	Measurement	Sample	Manufacturer"s Catalogue IS-5051	IS-5051	TC	2	2	1	
		Coil	B	Measurement	Sample							
		Resistance										
		Operating voltages	C	Measurement	Sample							
		Insulation resistance	C	Measurement	Sample							
		Dielectric strength	C	Performance	Sample							
		Solderability	C	Performance	Sample							
14.	Transistors	Dimension	B	Measurement	Sample	Manufacturer"s spec. IS-14901	IS-14901	TC	2	2	1	
		Type No./Marking	B	Verification	Sample							
		Solderability	C	Verification	Sample							
		Breakdown voltage Vceo	C	Measurement	Sample							
		Amplification factor	C	Measurement	Sample							
		Collector leakage current	C	Measurement	Sample							
		Resistance to solvent	C	Verification	Sample							

QUALITY ASSURANCE PLAN FOR 220V DC MAIN BATTERY CHARGERS (SAMPLE)

Sl. No	Components and Operations	Characteristics	Class	TYPE OF CHECK	QUANTUM OF CHECK	REFERENCE DOCUMENT	ACCEPTANCE NORMS	FORMAT OF RECORDS	AGENCY			REMARKS
									P	W	V	
15.	Voltage reference diodes	Dimension Type no./marking Breakdown voltage Leakage current Burn-in Test for 48 hrs. Resistance to solvent	B B C C C C	Measurement Verification Measurement Measurement Performance Performance	Sample 100% 100% 100% 100% Sample	Manufacturer"s Spec. IS-14901 Part-3	IS-14901 Part-3	TC	2	2	1	
16.	Signal diodes	Dimension Type No./marking Reverse leakage current Solderability	B B C C	Measurement Verification Measurement Performance	Sample 100% 100% Sample	Manufacturer"s spec. IS-14901	IS-14901	TC	2	2	1	
17.	Power Diodes	Visual Dimension Type No./marking Reverse leakage current	A B B C	Verification Measurement Verification Measurement	100% Sample 100% 100%	Manufacturer"s Catalogue IS-3895	IS-3895	TC	2	2	1	
18.	Low Power resistors	Visual Resistance value Solderability	A C C	Verification Measurement Verification	Sample 100% Sample	IS-5786 Part I-XI	IS-5786 Part I-XI	TC	2	2	1	
19.	Power resistors	Visual Type no./Marking Dimension Resistance value Insulation resistance Dielectric strength	A B B C C C	Verification Verification Measurement Measurement Measurement Performance	100% 100% Sample 100% Sample Sample	IS-5786 IS-8872	IS-5786 IS-8872	TC	2	2	1	

ANNEXURE - B

QUALITY ASSURANCE PLAN FOR 220V DC MAIN BATTERY CHARGERS (SAMPLE)

Sl. No	Components and Operations	Characteristics	Class	TYPE OF CHECK	QUANTUM OF CHECK	REFERENCE DOCUMENT	ACCEPTANCE NORMS	FORMAT OF RECORDS	AGENCY			REMARKS
									P	W	V	
20.	ICs a) Linear	Visual Type No./marking Functional	B B C	Measurement Verification Performance	Sample Sample Sample	Manufacturer"s Spec. IS-14901 Part-3	IS-14901 Part-3	TC	2	2	1	
	b) Digital	Visual Type No./marking Functional	A B C	Verification Verification Performance	Sample Sample Sample							
21.	Electrolyte capacitors a) for PCBS	Visual Type No./marking Dimension Capacitance value Leakage current	A B B C C	Verification Verification Measurement Measurement Measurement	100% 100% Sample 100% Sample	Manufacturer"s Spec. IS-4317	IS-4317	TC	2	2	1	
	b) DC Filter	Visual Type No./Marking Leakage current Insulation resistance Dielectric strength	A B C C C	Verification Verification Measurement Measurement Measurement	100% 100% 100% Sample Sample							

ANNEXURE - B

QUALITY ASSURANCE PLAN FOR 220V DC MAIN BATTERY CHARGERS (SAMPLE)

Sl. No	Components and Operations	Characteristics	Class	TYPE OF CHECK	QUANTUM OF CHECK	REFERENCE DOCUMENT	ACCEPTANCE NORMS	FORMAT OF RECORDS	AGENCY			REMARKS
									P	W	V	
22.	Ceramic disc capacitor/ mettalised polyester capacitor/ tantalum capacitors	Visual Type No./marking Dimension Capacitance value	A B B C	Verification Verification Measurement Measurement	100% 100% Sample 100%	Manufacturer"s Spec. JSS-50203/ JSS-50204 JSS-50205	JSS-50206/ JSS-50204 JSS-50205	TC	2	2	1	
23.	Lamination	Dimension Stacking factor Surface insulation	C B C	Measurement Verification Verification	Sample 100% Sample	IS-11794	IS-11794	TC	2	2	1	
24.	PVC insulated copper wire	Visual Dimension Insulation resistance Dielectric strength	A C C C	Verification Measurement Measurement Performance	100% 100% 100% Sample	IS-694	IS-694	TC	2	2	1	
25.	Thyristors / Power Transistors	Visual Type No./Marking Triggering leakage	A B C C	Measurement Verification Performance Measurement	Sample 100% 100% 100%	Manufacturer"s spec. IS-7788 IEC-146	IS-7788 IEC-146	TC	2	2	1	
26.	Electrical (wiring)	Routing of wires Bunching, Ferruling, Crimping, soldering, Clearance and colour coding	B B	Visual Visual	100% 100%	Manufacturer"s spec.	Manufacturer"s spec.	TC	2	2	1	

ANNEXURE - B

QUALITY ASSURANCE PLAN FOR 220V DC MAIN BATTERY CHARGERS (SAMPLE)

Sl. No	Components and Operations	Characteristics	Class	TYPE OF CHECK	QUANTUM OF CHECK	REFERENCE DOCUMENT	ACCEPTANCE NORMS	FORMAT OF RECORDS	AGENCY			REMARKS
									P	W	V	
27.	Painting	Pretreatment check	C	Process		PC-E-251	PC-E-251	TR	2	2,1	1	CHP To be conducted on test coupon
		Scratch hardness check	B	Physical	Clause no. 3.0 of IS-101	IS-101	IS-101	↓	↓	↓	↓	
		Bend (flexibility) Test	B	Mechanical	Clause no. 2.0 of IS-101	IS-101	IS-101					
		Pull of Adhesion test	B	Physical	Clause no. 5.0 of IS-101	IS-101	IS-101					
		Painting thickness check	B	Measurement		PC-E-251	PC-E-251					
28.	Sub Assembly	Dimension	B	Measurement	Sample	Manufacturer"s drawings	Manufacturer"s drawings	TC	2	2	1	
		Component verification	B	Comparison	Sample			↓	↓	↓	↓	
		Layout verification	B	Comparison	Sample							
		Wiring check	C	Continuity	Sample							
		Insulation resistance	C	Measurement	Sample							
		Dielectric strength	C	Performance	Sample							
29.	Final Assembly and pre testing	Dimension	B	Measurement	100%	Manufacturer"s drawings	Manufacturer"s drawings	TC	2	2	1	
		Component verification	B	Comparison	100%			↓	↓	↓	↓	
		Layout verification	B	Comparison	100%							
		Wiring check	C	Continuity	100%							
		Cable identification	B	Comparison	100%							
		Insulation resistance	C	Measurement	100%							
		Dielectric strength	C	Performance	100%							
30.	Final testing (a) Physical Verification	Presence of all items as per Bill Of Material (BOM)	B	Visual	100%	Manufacturer"s drawings	Manufacturer"s drawings	TC	2	2	1	
								↓	↓	↓	↓	

ANNEXURE - B

QUALITY ASSURANCE PLAN FOR 220V DC MAIN BATTERY CHARGERS (SAMPLE)

Sl. No	Components and Operations	Characteristics	Class	TYPE OF CHECK	QUANTUM OF CHECK	REFERENCE DOCUMENT	ACCEPTANCE NORMS	FORMAT OF RECORDS	AGENCY			REMARKS
									P	W	V	
31.	Performance test	Dimension	C	Measurement	100%	As per approved test procedure	As per approved test procedure	TR	2	2,1	1	CHP
		Connection checking	B	Performance	100%							
		High voltage test	B	Performance	100%							
		Alarm and indication	B	Performance	100%							
		Efficiency test	C	Measurement	100%							
		Voltage regulation of rectifier	C	Measurement	100%							
		Ripple content of rectifier	C	Measurement	100%							
		Undershoot and overshoot of rectifier output	B	Measurement	100%							
		Input inrush current measurement test	C	Measurement	100%							
		Dry heat test for PCBs	C	Performance	One no. each type							
		Damp heat test for PCBs	C	Performance								
		Short circuit capability	C	Performance	100%							
		Temperature rise test	C	Performance	One DCPS							
		Diode Voltage Regulator operation test	C	Performance	100%							

ANNEXURE - B

QUALITY ASSURANCE PLAN FOR 220V DC MAIN BATTERY CHARGERS (SAMPLE)

Sl. No	Components and Operations	Characteristics	Class	TYPE OF CHECK	QUANTUM OF CHECK	REFERENCE DOCUMENT	ACCEPTANCE NORMS	FORMAT OF RECORDS	AGENCY			REMARKS
									P	W	V	
		Burn-in test	C	Performance	100%	As per approved test procedure	As per approved test procedure	TR	2	2,1	1	CHP
		~~Qualification as per IEEE-650~~	~~C~~	~~Performance~~	~~One DCPS~~				~~3~~			
		EMC test	C	Performance	One DCPS				3			
		Battery charging test at boost voltage	C	Performance	100%				2			
		Battery charging test at equalize voltage	C	Performance	100%							
	Insulation test (a) between I/P and Earth (b) between O/P and Earth (c) Between I/P and O/P	Insulation resistance value	B	Performance Measurement at 2000 V DC after one minute	100%	As per design document	More than 5 megohm.					

LEGEND:

P	:	Performed by	A	:	Minor	1.	:	Purchaser
W	:	Witnessed by	B	:	Major	2.	:	Prime Supplier
V	:	Verified by	C	:	Critical	3.	:	External Laboratory
			TC	:	Test Certificate			
			TR	:	Test Report			
			CHP	:	Customer Hold Point			

COPY RIGHT AND CONFIDENTIAL

THE INFORMATION ON THIS DOCUMENT IS THE PROPERTY OF BHARAT HEAVY ELECTRICALS LIMITED. IT MUST NOT BE USED DIRECTLY OR INDIRECTLY IN ANY WAY DETRIMENTAL TO THE INTEREST OF THE COMPANY.

ANNEXURE-C

LIST OF ALARMS AND INDICATORS

REVISION: 00

APPROVED

RAJASEKAR K

PREPARED	ISSUED	DATE
AMIT KR SHARMA	416	29 / 8 /15

DETAILS OF ALARM AND INDICATIONS

Sl. No.	Alarm description	Potential Free Contact required	LED indication required	Input CB status	Output CB status	Main DCPS contactor status	Standby DCPS contactor status	Applicability	Remarks
1	~~220V DC Load on standby DCPS~~	YES	YES	ON	ON	ON	ON	DCPS-1,2,3,5,6	Alarm & trip
2	220V DC Low Battery for DCPS	YES	YES	ON	ON	OFF	OFF	ALL DCPS	Alarm
3	220V DCPS voltage trouble	YES	YES	ON (OFF during DC overvoltage trip)	ON	OFF	ON	ALL DCPS	Alarm & trip
4	220V DCPS Battery CB open	YES	YES	ON	ON	ON	OFF	DCPS-1,2,3,5,6	Alarm
5	220V DCPS input voltage high	YES	YES	ON	ON	ON	OFF	ALL DCPS	Alarm
6	220V DCPS input current high	YES	YES	ON	ON	ON	OFF	ALL DCPS	Alarm
7	Mains failure	YES	YES	ON	ON	OFF	ON	ALL DCPS	Alarm & trip

Sl. No.	Alarm description	Potential Free Contact required	LED indication required	Input CB status	Output CB status	Main DCPS contactor status	~~Standby DCPS contactor status~~	Applicability	Remarks
8	Control power supply failure	YES	YES	ON	ON	OFF	~~ON~~	ALL DCPS	Alarm & trip
9	220V DCPS Output voltage Low	YES	YES	ON	ON	OFF	~~ON~~	ALL DCPS	Alarm & trip
10	220V DCPS output overload	YES	YES	ON	ON	ON	~~OFF~~	ALL DCPS	Alarm & trip
11	Battery charging current high	YES	YES	ON	ON	ON	~~OFF~~	ALL DCPS	Alarm
12	Equipment over temperature	YES	YES	ON	ON	ON	~~OFF~~	ALL DCPS	Alarm
13	Battery on load	YES	YES	ON	ON	OFF	~~OFF~~	DCPS-1,2,3,5,6	Alarm
14	~~Standby not available~~	YES	YES	ON	ON	ON	~~OFF~~	DCPS-1,2,3,5,6	Alarm
15	Rectifier Fuse failure	YES	YES	ON	ON	ON	~~OFF~~	ALL DCPS	Alarm
16	Capacitor fuse failure	YES	YES	ON	ON	ON	~~OFF~~	ALL DCPS	Alarm
17	Fan failure	YES	YES	ON	ON	ON	~~OFF~~	ALL DCPS	Alarm
18	Output CB tripped	YES	YES	ON	OFF	OFF	~~ON~~	ALL DCPS	Alarm & trip
19	DC over voltage	YES	YES	OFF	ON	OFF	~~ON~~	ALL DCPS	Alarm & trip

COPY RIGHT AND CONFIDENTIAL

THE INFORMATION ON THIS DOCUMENT IS THE PROPERTY OF BHARAT HEAVY ELECTRICALS LIMITED. IT MUST NOT BE USED DIRECTLY OR INDIRECTLY IN ANY WAY DETRIMENTAL TO THE INTEREST OF THE COMPANY.

ANNEXURE-D

BLOCK DIAGRAM OF CHARGER

REVISION: 00

APPROVED		
RAJASEKAR K		
PREPARED	ISSUED	DATE
AMIT KR SHARMA	416	29 / 8 /15

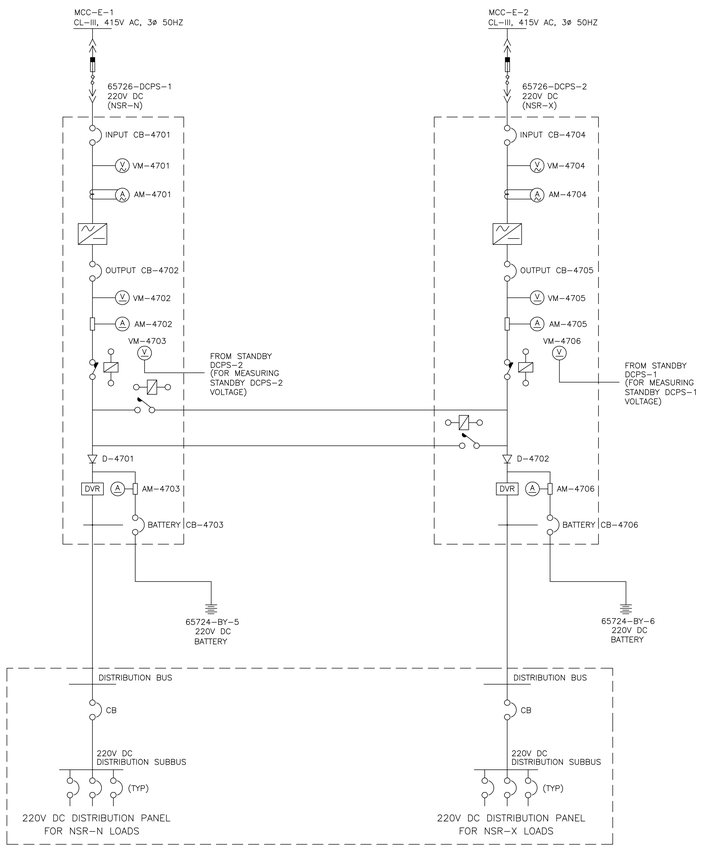

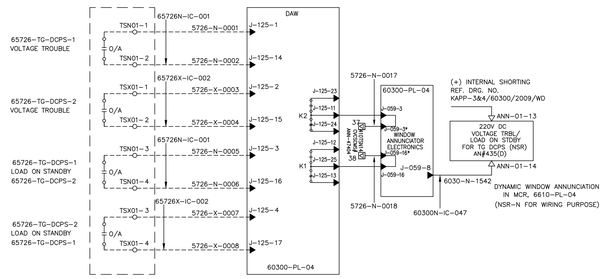

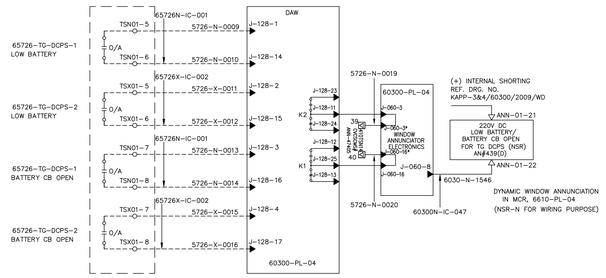

DIGITAL SIGNAL TO OWS THROUGH ETHERNET/FIBRE OPTIC :

SR. NO.	EQUIPMENT	OWS NO.	FAULT	DISCRIPTION	STATUS
1.	65726-DCPS-1	OWS # ANN-47394	220V TG DCPS TROUBLE	RECTIFIER FUSE FAILURE; CAPACITOR FUSE FAILURE; OUTPUT CB TRIPPED; BATTERY CHARGING CURRENT HIGH; BATTERY ON LOAD; MAINS FAILURE; OUTPUT OVERLOAD; EQUIPTMENT OVER TEMP.; CONTROL POWER SUPPLY FAILURE; OVERLOAD TRIP; DC OVER VOLTAGE; FAN FAILURE; INPUT VOLTAGE HIGH; INPUT CURRENT HIGH; OUTPUT VOLTAGE LOW; STAND BY NOT AVALIABLE	OK/TROUBLE
		OWS # ANN-47395	LOAD ON STAND BY	220V TG DCPS LOAD ON STAND BY (NSR-N)	OK/TROUBLE
		OWS # ANN-47396	BATTERY CB OPEN	220V TG DCPS BATTERY CB OPEN (NSR-N)	OPEN/CLOSE
		OWS # ANN-47397	LOW BATTERY	220V TG DCPS LOW BATTERY (NSR-N)	LOW/NORMAL
		OWS # ANN-47398	VOLTAGE TROUBLE	220V TG DCPS VOLTAGE TROUBLE (NSR-N)	OK/TROUBLE
2.	65726-DCPS-2	OWS # ANN-47399	220V TG DCPS TROUBLE	RECTIFIER FUSE FAILURE; CAPACITOR FUSE FAILURE; OUTPUT CB TRIPPED; BATTERY CHARGING CURRENT HIGH; BATTERY ON LOAD; MAIN FAILURE; OVERLOAD; EQUIPTMENT OVER TEMP.; CONTROL POWER SUPPLY FAILURE; OVERLOAD TRIP; DC OVER VOLTAGE; FAN FAILURE; INPUT VOLTAGE HIGH; INPUT CURRENT HIGH; OUTPUT VOLTAGE LOW; STAND BY NOT AVALIABLE	OK/TROUBLE
		OWS # ANN-47400	LOAD ON STAND BY	220V TG DCPS LOAD ON STAND BY (NSR-X)	OK/TROUBLE
		OWS # ANN-47401	BATTERY CB OPEN	220V TG DCPS BATTERY CB OPEN (NSR-X)	OPEN/CLOSE
		OWS # ANN-47402	LOW BATTERY	220V TG DCPS LOW BATTERY (NSR-X)	LOW/NORMAL
		OWS # ANN-47403	VOLTAGE TROUBLE	220V TG DCPS VOLTAGE TROUBLE (NSR-X)	OK/TROUBLE

TRANSMISSION OF ANALOG AND DIGITAL PARAMETERS FROM TG CONTROL POWER SUPPLY TO OPERATOR WORK STATION OF CLUSTER-4:

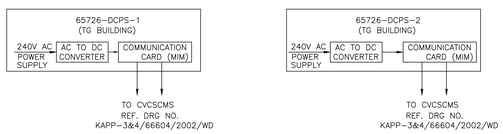

ANALOG SIGNAL (1-5V) TO OWS THROUGH ETHERNET/FIBRE OPTIC :

SR. NO.	65726-DCPS-1 (NSR-N)	65726-DCPS-2 (NSR-X)	DESCRIPTION	PROCESS RANGE	ALARM POINT SETTING
1.	OWS# ANN-47384	OWS# ANN-47389	INPUT VOLTAGE	0-600V AC	498V AC (H) 332V AC (L)
2.	OWS# ANN-47385	OWS# ANN-47390	INPUT CURRENT	0-XXXX AC	
3.	OWS# ANN-47386	OWS# ANN-47391	BATTERY CHARGING CURRENT	0-XXXX DC	
4.	OWS# ANN-47387	OWS# ANN-47392	OUTPUT VOLTAGE	0-XXXX VDC	
5.	OWS# ANN-47388	OWS# ANN-47393	OUTPUT CURRENT	0-XXXXA DC	

WIRE NO. PREFIX	WIRE NO. ALLOTED	WIRE NO. USED	SPARE
5720	0001 TO 0100	0001 TO 0020	0021 TO 0100

LEGEND :-

- MAIN CONTROL ROOM PANEL TERMINAL
- CONTROL EQUIPMENT ROOM TERMINAL
- FIELD TERMINAL
- CBS PANEL TERMINAL (NON SAFETY)
- SWITCH FUSE ASSEMBLY DRAW OUT TYPE
- RECTIFIER
- CIRCUIT BRAKER
- CONTACTOR
- AC AMMETER WITH CT
- AC VOLTMETER
- DC AMMETER WITH SHUNT
- DC VOLTMETER

CVCSCMS – CONTAINMENT VENTILATION AND COMMON SERVICES CONTROL MONITORING SYSTEM
SFU – SWITCH FUSE UNIT
SR – SAFETY RELATED
I/O – INPUT/OUTPUT
BY – BATTERY
SBC – STANDBY BATTERY CHARGER
DCPS – DC POWER SUPPLY
HS – HAND SWITCH
D – DIODE
MCC – MOTOR CONTROL CENTRE
BU – BUS
CH – CHANNEL
AH – AMPERE HOUR
MCR – MAIN CONTROL ROOM
DAW – DYNAMIC ANNUNCIATION WINDOW
CB – CIRCUIT BREAKER
VM – VOLTMETER
AM – AMMETER
DVR – DIODE VOLTAGE REGULATOR
OWS – OPERATOR WORK STATION
MIM – MULIPURPOSE INTELLIGENT MODULE

GENERAL NOTES:-

1) ALL EQUIPMENT NOS. SHALL BE PREFIXED BY 65726 UNLESS STATED OTHERWISE.
2) ALL ANNUNCIATION ARE OPEN TO ALARM UNLESS STATED OTHERWISE.
3) DCPS-1&2 ARE CAPABLE OF SUPPLYING 220V DC, A TG SYSTEM FOR NSR-N AND NSR-X LOAD RESPECTIVELY.
4) THE SUPPLIER'S SCOPE IN REGARD TO DCPS AND DISTRIBUTION PANEL ARE SHOWN IN BROKEN LINE.
5) ALL CIRCUIT BREAKERS & CONTACTORS SHOWN IN THIS DRAWING SHALL BE DOUBLE POLE.
6) 65724-BY-3&4 ARE LOCATED IN TURBINE BUILDING.
7) 66604-PL-10 IS LOCATED IN CER, CB-111 M. EL.
8) 60300-PL-04 IS LOCATED IN CER, CB-111 M. EL.
9) 6610-PL-04 IS LOCATED IN MCR, CB-111 M. EL.
10) TERMINALS WITH (*) INDICATE DUMMY TERMINAL.

THIS DESIGN AND DRAWING IS THE PROPERTY OF THE NUCLEAR POWER CORPORATION OF INDIA LIMITED. IT MAY NOT BE REPRODUCED OR QUOTATION OR UPON DELIVERY OF MATERIAL / COMPONENT IT MAY NOT BE USED FOR OTHER PURPOSES EXCEPT BY PERMISSION OF THE OWNER.

ISSUE No.	REV. No.	DESCRIPTION	SIGNATURE WITH DATE	ISSUE SHT. No.
1	R0	FIELD CONSTRUCTION	N P C	

DRAWING ISSUED FOR

NUCLEAR POWER CORPORATION OF INDIA LIMITED
(A GOVERNMENT OF INDIA ENTERPRISE)

TITLE :- KAKRAPAR ATOMIC POWER PROJECT- 3&4(2x700MWe)
CLASS-I 220V DC TG CONTROL POWER SUPPLY AND ANNUNCIATION SINGLE LINE DIAGRAM

DES'D. DATE 15/1/14 | DR'N. DATE 15/1/2014 | REV'D. DATE 19.1.2014
DES. CHK'D. DATE | DRG. CHK'D. DATE | APP'D. DATE 19.1.2014

PROJECT: KAPP-3&4

SCALE – N.T.S
PROJECTION

DRG. No. KAPP-3&4/65726/2001/ED
REV. No. R0

FLOPPY/CD No.
DRG. TO BE READ IN CONJUNCTION WITH DCN/FCN/ECN, IF ANY.
FILE NAME:KAPP3,4_65726_2001_ED_R0

DO NOT SCALE THE DRAWING.

UNLESS OTHERWISE STATED :-
ALL DIMENSIONS ARE IN mm.
MACHINE ALL OVER.
SURFACE FINISH TO BE 3.2/ OR BETTER.
REMOVE ALL BURRS.
REMOVE ALL EXTERNAL SHARP CORNERS AND EDGES BY CHAMFERING TO 0.15 X 45° / 0.40
ROUND ALL INTERNAL CORNERS AND EDGES TO R 0.15 / 0.40.
TOLERANCES ON RADII AND CHAMFERS (IS : 2102)

RADII AND CHAMFERS	0.5-3	3-6	6-30
TOLERANCES	± 0.2	± 0.5	± 1.0

TOLERANCES ON LINEAR DIMENSIONS (IS:2102)

DIMENSIONS	TOL.	DIMENSIONS	TOL.
UPTO 6	± 0.1	315- 1000	± 0.8
6 - 30	± 0.2	1000- 2000	± 1.2
30 - 120	± 0.3	2000- 4000	± 2.0
120 - 315	± 0.5	4000- 8000	± 3.0

TOLERANCES ON LINEAR DIMENSIONS

SPECIFIED DIMENSIONS	TOLERANCE
XX	±
XX.X	±
XX.XX	±

TOLERANCES ON ANGULAR DIMENSIONS : ± 0° – 30'

No.	LOCATION	DESCRIPTION	DR'N.	DES'D.	D.CHK'D.	REV'D.	APP'D.
		REVISIONS	SIGNATURE WITH DATE				

REFERENCE DRAWINGS	DRAWING No.	REFERENCE DRAWINGS	DRAWING No.

A0 DRG. No. KAPP-3&4/65726/2001/ED

COPY RIGHT AND CONFIDENTIAL

THE INFORMATION ON THIS DOCUMENT IS THE PROPERTY OF BHARAT HEAVY ELECTRICALS LIMITED. IT MUST NOT BE USED DIRECTLY OR INDIRECTLY IN ANY WAY DETRIMENTAL TO THE INTEREST OF THE COMPANY.

ANNEXURE-E

FEEDER LOAD LIST AND BATTERY SIZING

REVISION: 00

APPROVED

RAJASEKAR K

PREPARED	ISSUED	DATE
AMIT KR SHARMA	416	29 / 8 /15

PROJECT: KAPP 3 & 4 (TG & BOP C&I)

220V DC CHARGER/Load List

Feeder no	Feeder Description	Identification Code	Feeder Load in Amps	MCB rating in Amps	Fuse rating in Amps	Suitable Cable
1	64111-PL-01	64000-PL-41	20	25	32	2C X 35
2	64111-PL-02	64000-PL-42	20	25	32	
3	64111-PL-05	64000-PL-43	20	25	32	2C X 35
4	TSC		10			
	Total Load including spare margin		70			
	Total load including 15% design margin		**81**			
		10% of battery Ah	18			
		Charger rating (A)	88			

SUMMARY OF NUMBER OF FEEDERS (MCB/FUSE)

S.No	Rating	Qty. USED	SPARE	TOTAL
1	25A/32A	3	1	4
	TOTAL	**3**	**1**	**4**

Note: The above feeders mentioned for the DCDB-1 of charger-1 of unit-3. DCDB-2 of charger-2 for unit-3 is identical.

BATTERY SIZING:

MAKE OF BATTERY		HBL	BUI	EXIDE
RATED LOAD		70		
Permissible Voltage variation at Panels in volts	(A)	176 - 242 V		
Allowed Voltage drop from Battery to DCDB to DCS panels :	(B)	16		
Minimum voltage at Battery bank after discharge for 1 hour	C=(A+B)	192		
End cell voltage 'ECV' after discharge for 1 hour in Volts per cell	(D)	1.75	1.75	1.75
Number of cells required	F= (C /D)	110	110	110
Number of cells considered (each with nominal voltage of 2V)		110	110	110
K-factor		1.66	1.67	1.67
Ageing factor		1.25	1.25	1.25
Design margin		1	1	1
Temperature correction factor		1.0989	1.0989	1.207
Considering K-factor, Ageing factor, Design margin & TCF Required AH = RATED LOAD x G x H x I x J		**160**	**161**	**176**

CABLE SIZE CALCULATION

	Voltage drop from Battery to Charger		
1	Number of cells	(A)	110
2	Float Voltage per cell	(B)	2
3	Float mode Voltage at Battery Charger	(C) = A x B	220
4	Distance from Battery to Charger in mtrs	(D)	165
5	Load Current (Amps)	(E)	70
6	Size of Cable from Battery to Charger **(Sqmm bare COPPER)**		70
7	Resistance of cable at 20 deg.C in **Ohms/Km**	(F)	0.27
8	Resistance of cable at 40 deg.C in **Ohms/Km**	(G) = F/0.926	0.2916
9	Voltage drop in Cable per run **(Volts)**	(H)=(ExGx2D)/1000	6.735
10	Number of runs of cable per pole	(I)	1
11	Voltage Drop for "I" runs of cable **(Volts)**	(J) = H/I	6.735
	Voltage drop from DCDB to DCS Panels		
1	Distance from DCDB to Panels **(mtrs)**	(K)	20
2	Panel Load Current range **(Amps)**		0 - 20
3	Max Load current considered **(Amps)**	(L)	20
4	Size of Cable from DCDB to Panels **(Sqmm bare COPPER)**		70
5	Resistance of cable at 20 deg.C (**Ohms/Km)**	(M)	0.27
6	Resistance of cable at 45 deg.C **(Ohms/Km)**	(N) = M **/** 0.909	0.297
7	Voltage drop in Cable **(Volts)**	(O) =(2KxLxN)/1000	0.238
10	Number of runs per pole	(P)	1
11	Voltage Drop for "I" runs of cable **(Volts)**	(Q) = O/P	0.238
	Total Voltage drop (Battery to Charger to DCDB to Panels)	= J+Q	**6.973**
	Voltage available at panel on Full Load in Float Mode	= C - Q	**219.762**

Note:-

1. The cable conductor resistance are taken as per IS:8130-1984,Table 2 for stranded Al conductor, Class 2,Annex-A.
2. 1C 630Sqmm cable envisaged between battery to charger. One runs will be used as +ve cable and one as -ve.
3. 2C 35 Sqmm cable envisaged between charger to panels. One core will be used as +ve cable and another as -ve
4. **Temperature correction factor of 1.0989 Is considered as per IS-1651 for lead acid tubular batteries**

* M/s BUI is acquired by M/s Union Batteries

COPY RIGHT AND CONFIDENTIAL

THE INFORMATION ON THIS DOCUMENT IS THE PROPERTY OF BHARAT HEAVY ELECTRICALS LIMITED. IT MUST NOT BE USED DIRECTLY OR INDIRECTLY IN ANY WAY DETRIMENTAL TO THE INTEREST OF THE COMPANY.

ANNEXURE-F

TECHNICAL COMPLIANCE SHEET FOR DCDB TO BE FILLED BY PARTICIPATING VENDORS AND SUBMITTED ALONG WITH TECHNICAL BID

REVISION: 00

APPROVED		
RAJASEKAR K		
PREPARED	ISSUED	DATE
AMIT KR SHARMA	416	29 / 8 /15

ANNEXURE – F

TECHNICAL PARTICULARS REQUIRE

1.0 TECHNICAL DATA TO BE SUPPLIED ALONGWITH THE TENDER

Tenderers shall submit with their bids, a complete description of all equipment on which their bid is based and such description shall include the details given hereunder. It is necessary that all details shall be completely filled in the first instance to evaluate the bid and compare it with other offers.

Bids with incomplete or ambiguous information shall not be considered.

The details hereunder shall be complete in all respects and reference to other places shall be avoided as far as possible.

Class I
220V DC

2.1 Complete Equipment

2.1.1 Make

2.1.2 Type reference

2.1.3 Is indication provided?

2.1.4 Is voltmeter provided?

2.1.5 Is ammeter provided?

2.1.6 Are fuse ratings as per specifications?

2.1.7 Are no. of sub-buses as per specifications?

2.1.8 Are no. of MCBs as per specification?

2.1.9 Are ratings of CBs as per specs?

Class I
220V DC

2.1.10	Is cable entry from bottom/top?	
2.1.11	Ambient temperature and humidity at which the system can operate satisfactorily.	
	Temperature	
	Humidity	
2.1.12	Are the panels seismically Qualified?	
2.1.13	Whether panels are seismically qualified by analysis and testing or by testing	
2.1.14	Mean time between failure of	
	- Complete equipment	…….Hrs
	- Device having lowest MTBF	…….Hrs
	- MTTR	…….Hrs
2.1.15	Are the electronic components subjected to burn-in-test before use?	Yes/No.
2.1.16	Is the equipment fully tropicalised?	Yes/No.
2.1.17	Is the empty panel electromagnetic shielded and Flasher unit EMC tested?	Yes/No.
2.1.18	Do all equipment used independently support combustion?	Yes/No.

Class I
220V DC

2.1.19	Are the panels natural cooled?	Yes/No.
2.1.20	Temperature rise anticipated inside panel	---^{0}C.
2.1.21	Is the color shade of the panel shade 365 as per IS-5 for KAPP-3?	Yes/No.
2.1.22	Is the color shade of the panel shade 275 as per IS-5 for KAPP-4?	Yes/No.
2.1.23	Weight of each panel	
2.1.24	Overall size of every panel.	
	Height	…….mm
	Length	…….mm
	Depth	…….mm
2.1.25	Insulation resistance of panel at 500V DC.	
2.1.26	Voltage proof of every panel at 1500 V AC.	
2.1.27	Is Insulation Monitoring Device (IMD) mounted?	N
2.1.28	Is scanner and Earth Fault Sensor (EFS) mounted?	N
2.1.29	Is selector HS provided for meter selection?	N

		Class I 220V DC
2.1.30	Are HS"s provided to connect IMD & scanner?	
2.1.31	Is LCM mounted & wired?	
2.1.32	Is MSCPD mounted?	Not Applicab
2.1.33	Are terminations provided for incoming cables?	
2.1.34	Are bus bars as per specifications?	
3.0	**HOUSING**	
3.1	Thickness of sheet steel.	…….mm
3.2	Is sheet steel cold rolled?	Yes/No
3.3	Are ventilation louvers provided?	Yes/No
3.4	Are ventilation louvers screened?	Yes/No
3.5	Is the enclosure rigid free floor standing?	Yes/No
3.6	Is rear access available?	Yes/No
3.7	Are the panels electromagnetically shielded?	Yes/No
4.0	**TESTS**	
	The component tests and other functional tests mentioned in section 8.0 will be performed.	Yes/No.

4.1 IR/HV test at appropriate voltage level will be performed at site. Yes/No.

5.0 TENDER DRAWINGS

The Bidder shall list the tender drawings which are being submitted along with the bid. A general arrangement drawing showing main equipment layout, general features, overall dimensions, wiring arrangement etc, must accompany the bid.

6.0 TIME REQUIRED BY SUPPLIER

The supplier must state the period required for the preparation of drawings and the time he has allowed for approval of the drawings by the purchaser in the delivery period specified.

7.0 TRANSPORTATION

The supplier must state the mode of transportation whether by rail or by truck, and what measures will be taken to ensure that the equipment does not get damaged in transit.

8.0 PROOF OF ABILITY

The bidder shall submit a brief list of jobs executed by him (and name of respective customers) to standards and tolerances specified in the tender document. The bidder shall clearly indicate seismically qualified Control power supply distribution system contracts executed, if any.

9.0 LIST OF APPENDICES

A list of all appendices, annexure, characteristic curves, printed technical literatures which form an integral part of this tender shall be listed.

10.0 DEVIATIONS FROM SPECIFICATIONS

The bidder shall note that all the details of the technical specification are not brought out in the section no. 2 against "Technical data to be supplied along with the tender" format. Hence, the bidder shall confirm that the system is as per this complete specification. In case of any deviations, from the technical specification, the deviation shall be clearly listed referring the section of the tender document in order, under the specific heading of deviations from technical specification. Bids which do not list deviations specifically under this heading or do not confirm there are no deviations from the technical specification will not be considered for evaluation.

COPY RIGHT AND CONFIDENTIAL

THE INFORMATION ON THIS DOCUMENT IS THE PROPERTY OF BHARAT HEAVY ELECTRICALS LIMITED. IT MUST NOT BE USED DIRECTLY OR INDIRECTLY IN ANY WAY DETRIMENTAL TO THE INTEREST OF THE COMPANY.

ANNEXURE-G

QAP FOR DCDB

(The QAP is subject to approval)

REVISION: 00

APPROVED		
RAJASEKAR K		
PREPARED	ISSUED	DATE
AMIT KR SHARMA	416	29 / 8 /15

ANNEXURE - G

QUALITY ASSURANCE PLAN FOR MAIN CONTROL CENTRE POWER SUPPLY DISTRIBUTION PANELS (SAMPLE)

Sl. No	Components and operations	Characteristics	Class	TYPE OF CHECK	QUANTUM OF CHECK	REFERENCE DOCUMENT	ACCEPTANCE NORMS	FORMAT OF RECORDS	AGENCY			REMARKS
									P	W	V	
1.	Miniature Circuit Breaker	Visual Dimension Operation Type no / making Tripping characteristics Insulation resistance Die-electric strength	A B B C C C C	Verification Measurement Performance Verification Measurement Measurement Performance	100% Sample 100% 100% Sample 100% Sample	Manufacturer"s Spec. IS/IEC-60898	IS/IEC-60898	TC	2	2	1	
2.	Series reactors	Dimension Inductance Value Insulation resistance Dielectric strength Temp. rise Double Freq. Double Voltage withstand test	B B C C C C	Measurement Measurement Measurement Performance Measurement Performance	100% 100% 100% 100% Sample Sample	IS-5553	IS-5553	TR	2	2	1	
3.	Control Transformer / Pulse Transformer	Dimension Terminal Marking & Polarity Voltage ratio No load current Insulation resistance Dielectric strength	B B C C C C C	Measurement Verification Measurement Measurement Measurement Measurement Performance	100% 100% 100% 100% 100% 100% 100%	IS-3156	IS-3156	TC	2	2	1	

ANNEXURE - G

QUALITY ASSURANCE PLAN FOR MAIN CONTROL CENTRE POWER SUPPLY DISTRIBUTION PANELS (SAMPLE)

Sl. No	Components and Operations	Characteristics	Class	TYPE OF CHECK	QUANTUM OF CHECK	REFERENCE DOCUMENT	ACCEPTANCE NORMS	FORMAT OF RECORDS	AGENCY			REMARKS
									P	W	V	
4.	Fuses	Dimension Type no / Marking Continuity	A C C	Measurement Verification Verification	Sample Sample Sample	Manufacturer‟s spec.	IS-13703	TC	2	2	1	
5	Fuse holders	Visual Dimension Type no/marking Insulation resistance Dielectric strength	A A C C C	Verification Measurement Verification Measurement Performance	Sample Sample Sample sample Sample	Manufacturer‟s spec.	Manufacturer‟s spec.	TC	2	2	1	
6.	Printed Circuit Board	Dimension Continuity Solderability Insulation resistance Dielectric strength Peel strength	B C C C C C	Measurement Verification Verification Measurement Performance Measurement	Sample Sample Sample Sample Sample Sample	PP-E-1443	PP-E-1443	TC	2	2	1	
7.	Relays	Dimension Coil Resistance Operating voltages Insulation resistance Dielectric strength Solderability	B B C C C C	Measurement Measurement Measurement Measurement Performance Performance	Sample Sample Sample Sample Sample Sample	Manufacturer‟s Catalogue IS-5051	IS-5051	TC	2	2	1	

ANNEXURE - G

QUALITY ASSURANCE PLAN FOR MAIN CONTROL CENTRE POWER SUPPLY DISTRIBUTION PANELS (SAMPLE)

Sl. No	Components and Operations	Characteristics	Class	TYPE OF CHECK	QUANTUM OF CHECK	REFERENCE DOCUMENT	ACCEPTANCE NORMS	FORMAT OF RECORDS	AGENCY			REMARKS
									P	W	V	
8.	Transistors	Dimension Type No./Marking Solderability Breakdown voltage Vceo Amplification factor Collector leakage current Resistance to solvent	B B C C C C C	Measurement Verification Verification Measurement Measurement Measurement Performance	Sample Sample Sample Sample Sample Sample Sample	Manufacturer"s spec. IS-14901	IS-14901	TC	2	2	1	
9.	Voltage reference diodes	Dimension Type no. / Marking Breakdown voltage Leakage current Resistance to solvent	B B C C C	Measurement Verification Measurement Measurement Performance	Sample Sample Sample Sample Sample	Manufacturer"s spec. IS-14901-3	IS-14901-3	TC	2	2	1	
10.	Signal diodes	Dimension Type no./Marking Reverse leakage current Solderability	B B C C	Measurement Verification Measurement Performance	Sample Sample Sample Sample	Manufacturer"s spec. IS-14901-3	IS-14901-3	TC	2	2	1	

ANNEXURE - G

QUALITY ASSURANCE PLAN FOR MAIN CONTROL CENTRE POWER SUPPLY DISTRIBUTION PANELS (SAMPLE)

Sl. No	Components and Operations	Characteristics	Class	TYPE OF CHECK	QUANTUM OF CHECK	REFERENCE DOCUMENT	ACCEPTANCE NORMS	FORMAT OF RECORDS	AGENCY			REMARKS
									P	W	V	
11.	Low power resistors	Visual Resistance value Solderability	A C C	Verification Measurement Verification	Sample Sample Sample	IS-5786 Part I - XI	IS-5786 Part I - XI	TC	2	2	1	
12.	ICs a) Linear b) Digital	Visual Type no/ Marking Functional checks Visual Type no./Marking Functional checks	B B C A B C	Measurement Verification Performance Verification Verification Performance	Sample Sample Sample Sample Sample Sample Sample	Manufacturer"s spec. IS-14901	IS-14901	TC	2	2	1	
13.	Capacitors For PCBs	Visual Type No./marking Dimension Capacitance value Leakage current	A B B C C	Verification Verification Measurement Measurement Measurement	Sample Sample Sample Sample Sample	Manufacturer"s spec. IS-590	IS-590	TC	2	2	1	

ANNEXURE – G

QUALITY ASSURANCE PLAN FOR MAIN CONTROL CENTRE POWER SUPPLY DISTRIBUTION PANELS (SAMPLE)

Sl. No	Components and Operations	Characteristics	Class	TYPE OF CHECK	QUANTUM OF CHECK	REFERENCE DOCUMENT	ACCEPTANCE NORMS	FORMAT OF RECORDS	AGENCY			REMARKS
									P	W	V	
14.	Ceramic disc capacitor/ metallised polyester capacitor/ tantalum capacitors	Visual Type No. / marking Dimension Capacitance value For ceramic disc capacitors	A B B C C	Verification Verification Measurement Measurement Performance	Sample Sample Sample Sample	Manufacturer"s spec. JSS-50203/ JSS-50204 JSS-50205 IS-8507	JSS-50206/ JSS-50204 JSS-50205 IS-8507	TC ↓	2 ↓	2 ↓	1 ↓	
15.	Flasher Relay (Solid State)	Visual Dimension Di-Electric Strength Insulation Resistance Setting Accuracy for the Set time Repeat Accuracy	As per NPCIL approved test procedure	As per NPCIL approved test procedure	As per NPCIL approved test procedure	As per NPCIL approved test procedure	As per NPCIL approved test procedure	As per NPCIL approved test procedure				
16.	Flasher Failure Unit (Solid state)	Visual Dimension Di-Electric Strength Insulation Resistance Functional Test 100 hr Burn in	As per NPCIL approved test procedure	As per NPCIL approved test procedure	As per NPCIL approved test procedure	As per NPCIL approved test procedure	As per NPCIL approved test procedure	As per NPCIL approved test procedure				
17.	~~Ground~~ Fault Detection system	~~Refer Specification~~ No. PB-E-249	~~Refer~~ Specification No. PC-E-249	~~Refer~~ Specification No. PC-E-249	~~Refer~~ Specification No. PC-E-249	~~Refer~~ Specification No. PC-E-249	~~Refer~~ Specification No. PC-E-249	~~Refer~~ Specification No. PC-E-249				

ANNEXURE – G

QUALITY ASSURANCE PLAN FOR MAIN CONTROL CENTRE POWER SUPPLY DISTRIBUTION PANELS (SAMPLE)

Sl. No	Components and Operations	Characteristics	Class	TYPE OF CHECK	QUANTUM OF CHECK	REFERENCE DOCUMENT	ACCEPTANCE NORMS	FORMAT OF RECORDS	AGENCY			REMARKS
									P	W	V	
~~18.~~	~~MCB status Monitoring system~~	~~Refer Specification No. PC-E-248~~	~~Refer Specification No. PC-E-248~~	~~Refer Specification No. PC-E-248~~	~~Refer Specification No. PC-E-248~~	~~Refer Specification No. PC-E-248~~	~~Refer Specification No. PC-E-248~~	~~Refer Specification No. PC-E-248~~				
19.	Handswtiches (Selector)	Visual Dimension Operations Type no. / marking Insulation resistance Die-electric strength	B C C C C C	Measurement Verification Performance Verification Measurement Performance	100% Sample 100% 100% 100% Sample	Manufacturer"s Spec IS/IEC-60947-5	IS/IEC-60947-5	TC	2	2	1	
20.	Meters	Visual Dimensions Type no. / marking Accuracy Insulation Resistance	A B C C C	Verification Measurement Verification Measurement Measurement	100% Sample 100% 100% 100%	Manufacturer"s Spec. IS-1248/8573	IS-1248/8573	TC	2	2	1	

ANNEXURE – G

QUALITY ASSURANCE PLAN FOR MAIN CONTROL CENTRE POWER SUPPLY DISTRIBUTION PANELS (SAMPLE)

Sl. No	Components and Operations	Characteristics	Class	TYPE OF CHECK	QUANTUM OF CHECK	REFERENCE DOCUMENT	ACCEPTANCE NORMS	FORMAT OF RECORDS	AGENCY			REMARKS
									P	W	V	
21.	PTFE insulated Copper Wire including 22 AWG (30/7) silver copper conductor and PTFE insulated wire for MCBSMS (auxiliary contact wiring)	Visual Dimensional insulation resistance Dielectric strength	A C C C	Verification Measurement Measurement Performance	Sample Sample Sample Sample	MIL-W-16878E	MIL-W-16878E	TC	2	2	1	
22.	Electrical (wiring)	Routing of Wires Bunching, Ferruling, Crimping, Soldering, Clearance and colour Coding	Major	Visual	100%	Manufacture"s Spec.	Manufacturer"s Spec.	TC	2	2	1	
23.	Painting	Pretreatment check Scratch hardness check Bend (Flexibility) Test Pull of Adhesion test Painting thickness check	C B B B B	Process Physical Mechanical Physical Measurement	Type test on test coupon Clause no. 3.0 of IS-101 Clause no. 2.0 of IS-101 Clause no. 5.0 of IS-101	PC-E-253 IS-101 IS-101 IS-101 PC-E-253	PC-E-253 IS-101 IS-101 IS-101 PC-E-253	TR	2	2	1	CHP

ANNEXURE -G

QUALITY ASSURANCE PLAN FOR MAIN CONTROL CENTRE POWER SUPPLY DISTRIBUTION PANELS (SAMPLE)

Sl. No	Components and Operations	Characteristics	Class	TYPE OF CHECK	QUANTUM OF CHECK	REFERENCE DOCUMENT	ACCEPTANCE NORMS	FORMAT OF RECORDS	AGENCY			REMARKS
									P	W	V	
24.	Final Assembly and pre testing	Dimension Component verification Layout verification Wiring Check Cable identification Insulation resistance Dielectric strength	Major Major Major Critical Major Critical Critical	Measurement Verification Verification Continuity Verification Measurement Performance	100% 100% 100% 100% 100% 100% 100%	Manufacturer‟s drawings	Manufacturer‟s drawings	TC	2	2	1	
25.	Final Testing (a) Physical Verification	Presence of all items as per BOM	B	Visual	100%	Manufacturer‟s drawings	Manufacturer‟s drawings	TC	2	2	1	
26.	Test on system. Type Test	Dimension of modules and panels Connection checking of modules High Voltage Test on panels Functional test as per referred EDs	C B B B	Measurement Performance Performance Performance	Sample Sample Sample 100%	As per approved test procedure As per approved test procedure As per approved test procedure As per approved test procedure	As per approved test procedure As per approved test procedure As per approved test procedure As per approved test procedure	TR TR TR TR	2	2, 1	1	CHP

ANNEXURE -G

QUALITY ASSURANCE PLAN FOR MAIN CONTROL CENTRE POWER SUPPLY DISTRIBUTION PANELS (SAMPLE)

Sl. No	Components and Operations	CHARACTERISTICS	CLASS	TYPE OF CHECK	QUANTUM OF CHECK	REFERENCE DOCUMENT	ACCEPTANCE NORMS	FORMAT OF RECORDS	AGENCY			REMARKS
									P	W	V	
27.	Acceptance tests	Dimensions of module, panels	C	Measurement	100%	As per approved procedure	As per approved procedure	TR	2	2	1	CHP
		Insulation resistance test of panels and modules	B	Measurement	100%	As per approved procedure	As per approved procedure	TR	2	2	1	
		High voltage test of panel	B	Measurement	100%	As per approved procedure	As per approved procedure	TR	2	2	1	
		Functional test on panels	C	Performance	100%	As per approved procedure	As per approved procedure	TR	2	2	1	
28.	Special type test	Environmental test	C	Performance	One sub assembly	As per approved test procedure	As per approved test procedure	TR	2	2, 1	1	CHP
		EMC test	C	Performance	One panel & Flasher unit	IEC-61000-5-7 PC-E-710	~~PC-E-254~~ PC-E-710	TR				
		MCB Coordination test	C	Performance	Each type	As per approved test procedure	As per approved test procedure	TR				
		~~Seismic Qualification~~	~~C~~	~~Performance~~	~~Two panels~~	~~As per approved~~ test procedure	~~As per approved~~ test procedure	~~TR~~				

LEGEND:

P	:	Performed by	A	:	Minor	1.	:	Purchaser
W	:	Witnessed by	B	:	Major	2.	:	Prime Supplier
V	:	Verified by	C	:	Critical	3.	:	External Laboratory
			TC	:	Test Certificate			
			TR	:	Test Report			
			CHP	:	Customer Hold Point			