COPY RIGHT AND CONFIDENTIAL
The information on this document is the property of BHARAT HEAVY ELECTRICALS LIMITED
it must not be used directly or indirectly in any way deterimental to the interest of the company.

DRAWING No. PE-DG-434-645-C007

FIRST ANGLE PROJECTION

ALL DIMENSIONS ARE IN MM

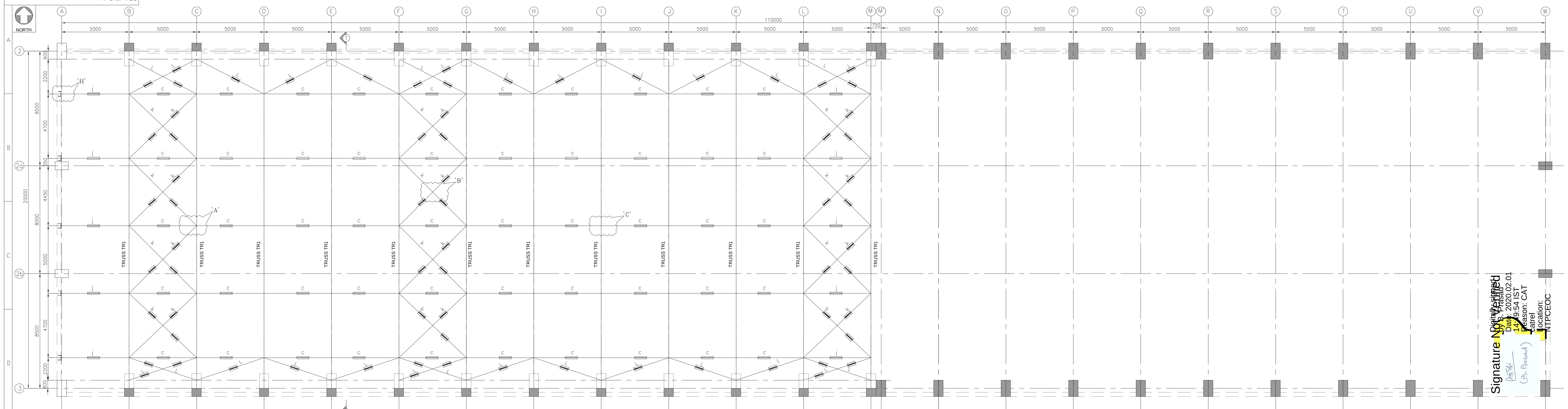

FRAMING PLAN AT EL(+)10.50M. (TOS)
PLAN AT (BOTTOM CHORD)
(SCALE 1:100)

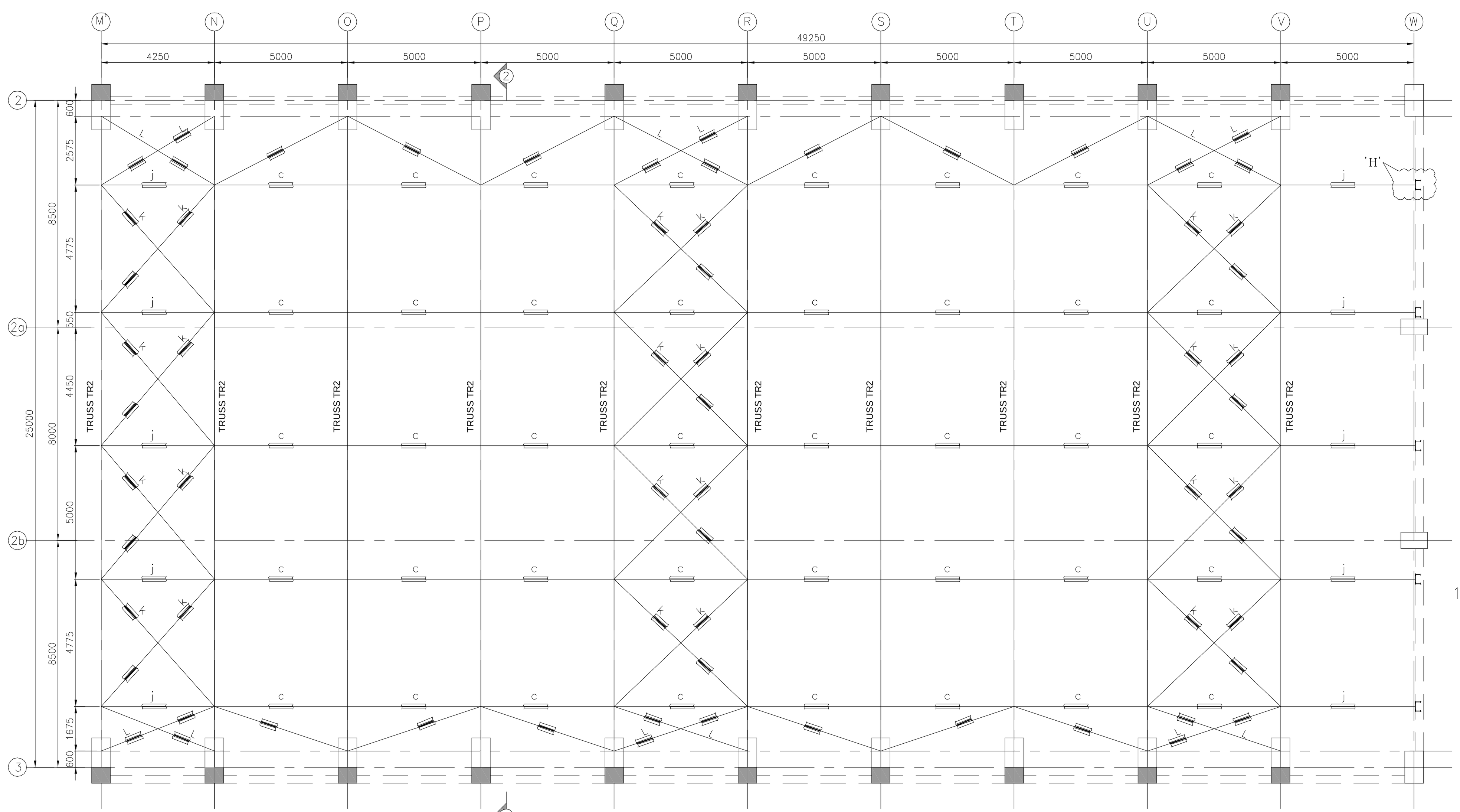

FRAMING PLAN AT EL(+)13.40M. (TOS)
PLAN AT (BOTTOM CHORD)

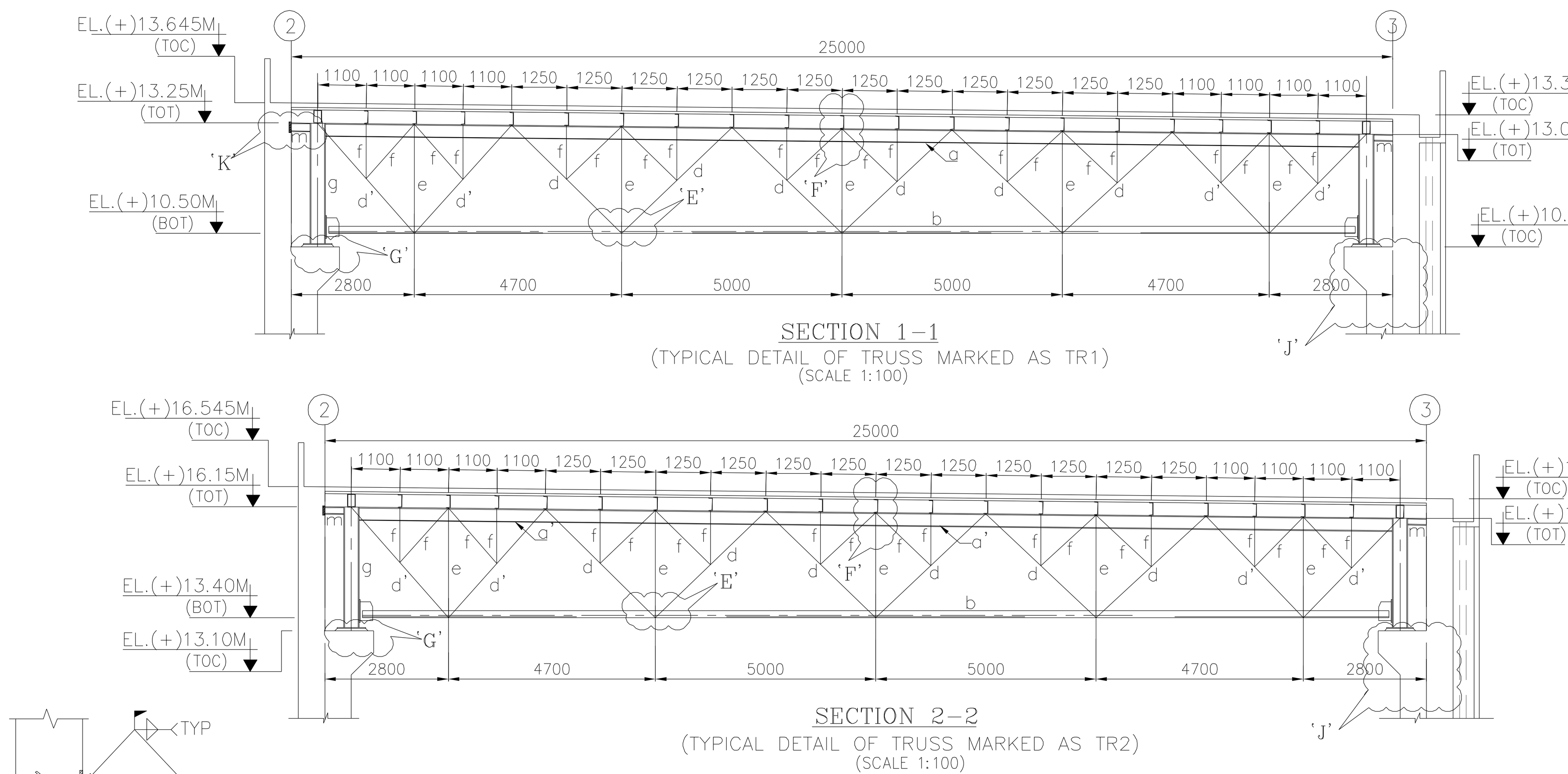

SECTION 1-1
(TYPICAL DETAIL OF TRUSS MARKED AS TR1)
(SCALE 1:100)

SECTION 2-2
(TYPICAL DETAIL OF TRUSS MARKED AS TR2)
(SCALE 1:100)

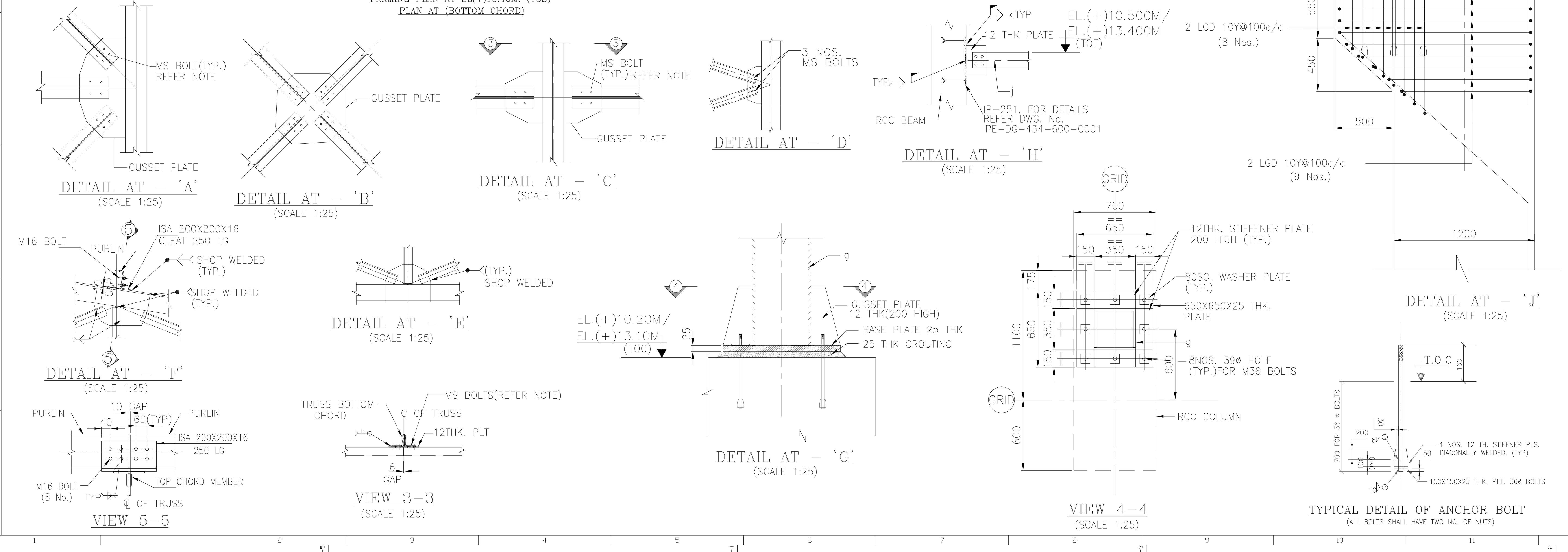

MEMBER SCHEDULE

MEMBER	MARK	TRUSS TR1/TR2
TOP CHORD(TR1) TOP CHORD(TR2)	a a'	ISA 200x200x16 ISA 200x200x20
BOTTOM CHORD	b	ISA 150x150x16
BOTTOM TIE	c	ISA 75x75x8
MAIN DIAGONALS	d	ISA 90x90x10
MAIN DIAGONALS (END)	d'	ISA 130x130x10
MAIN VERTICALS	e	ISA 75x75x6
SECONDARY VERTICALS AND DIAGONALS	f	ISA 50x50x6
VERTICAL STOOL	g	a = 350x20 PLT b = 350x20 PLT
PURLIN	h	MC 300
PURLIN (END)	h'	MC 300 BOX
BOTTOM TIE(ENDS)	j	ISA 130x130x12
DIAGNOL BRACING (BOTTOM CHORD)	k	ISA 150x150x12
DIAGNOL BRACING (BOTTOM CHORD) END	L	ISA 130x130x12
(TOP CHORD) TIE	m	ISA 100x100x10

KEY PLAN

NORTH

FQA BLDG
WORKSHOP (110MX31.5M)
BOP EL.376.2M
1200N
400E

NOTES:-

1. THIS DRAWING SHALL BE READ IN CONJUNCTION WITH CONTRACT TERMS AND CONDITIONS, TECHNICAL SPECIFICATIONS AND SCHEDULE OF ITEMS.
2. ALL DIMENSIONS ARE IN MM & ELEVATIONS IN METERS UNLESS STATED OTHERWISE.
3. ALL ELEVATIONS ARE REFERRED TO THE FINISHED FLOOR LEVEL OF POWER HOUSE BUILDING AS EL 0.00 M WHICH CORRESPONDS TO RL(+) 375.50 M.
4. THE FFL OF THE BUILDING IS EL(+)3.0 M CORRESPOND TO RL(+)378.5 M.
6. NO DIMENSIONS FROM THIS DRAWING ARE TO BE SCALED OFF AND ONLY FIGURED DIMENSIONS SHALL BE FOLLOWED.
7. CHECK ALL DIMENSIONS, CO-ORDINATES & ELEVATIONS IMMEDIATELY. REPORT ANY DISCREPANCIES CONFLICTS OR ERROR FOR CLARIFICATION PRIOR TO COMMENCING WORK.
8. CONNECTION OF ALL TRUSS & BRACING MEMBERS SHELL BE DESIGNED TO DEVELOP FULL TENSILE STRENGTH OF MEMBER.
9. GRADE OF STEEL SHALL BE E250 FOR ALL ROLLED SECTIONS.
10. CONNECTION DETAIL SHOWN ARE INDICATIVE.ACTUAL DETAIL SHALL BE DEVELOPED BY DETAILS & APPROVED BY ENGINEER IN CHARGE BEFORE FABRICATION & ERECTION WORK.

ENGINEERING REFERENCE DRAWINGS :-

1. PE-DG-434-100-M001-R4 - PLOT PLAN (9585-001-999-POC-F-001)
2. PE-DG-434-568-A001-R4 - LAYOUT OF WORKSHOP BUILDING (9585-001-315-PVM-F-001)

STRUCTURAL REFERENCE DRAWINGS :-

1. PE-DG-434-645-C001 (9585-001-315-PVC-C-1299) - WORKSHOP BUILDING - ARCHITECTURAL PLANS
2. PE-DG-434-645-C002 (9585-001-315-PVC-C-1302) - WORKSHOP BUILDING - ARCHITECTURAL ELEVATIONS, SECTIONS & DETAILS
3. PE-DG-434-645-C004 (9585-001-315-PVC-C-1291) - WORKSHOP BUILDING - GA & RC DETAIL OF FOUNDATION & COL.
4. PE-DG-434-645-C005 (9585-001-315-PVC-C-1292) - WORKSHOP BUILDING - GA & RC DETAIL OF PLINTH BEAMS
5. PE-DG-434-645-C006 (9585-001-315-PVC-C-1293) - WORKSHOP BUILDING - GA & RC DETAIL OF TIE BEAMS
6. PE-DG-434-645-C008 (9585-001-315-PVC-C-1295) - WORKSHOP BUILDING - DETAIL OF PURLIN
7. PE-DG-434-645-C010 (9585-001-315-PVC-C-1297) - WORKSHOP BUILDING - GA & RC DETAILS OF ROOF BEAMS & ROOF SLAB

LEGENDS.:-

℄ - CENTER LINE
EL - ELEVATION
FFL - FINISHED FLOOR LEVEL
TYP - TYPICAL
BOS - BOTTOM OF STEEL
TOS - TOP OF STEEL
EL(+)X.XXX - LEVEL TAG
TOC - TOP OF CONCRETE
UNO - UNLESS NOTED OTHERWISE
TOT - TOP OF TRUSS
BOT - BOTTOM OF TRUSS

THIS DRG SHALL BE READ IN CONJUCTION WITH NTPC DRG NO. 9585-001-315-PVC-C-1295.

SPECIAL NOTE

DRAWINGS / DOCUMENTS ARE BEING SUBMITTED FOR INFORMATION. BHEL HEREBY CONFIRMS FULL COMPLIANCE TO ALL THE SPECIFIED REQUIREMENTS OF THE CONTRACT SPECIFICATION, WITHOUT ANY DEVIATION, WHATSOEVER. IN CASE DURING THE TENURE OF THE CONTRACT, IT IS OBSERVED/FOUND THAT THE DATA/ INFORMATION IN THE RELEASED DRAWING/DOCUMENT IS NOT MEETING THE CONTRACT SPECIFICATION, BHEL/ITS VENDOR(S) WILL MODIFY/ RECTIFY/REPLACE THE SAME TO MEET THE SPECIFICATION WITHOUT ANY COMMERCIAL IMPLICATION OR ANY TIME EXTENSION TO PVUNL/NTPC IN THIS REGARD.

BILL OF MATERIAL(APPROX.)

S NO.	MEMBER	QTY(MT)
1.	ISA 200X200X20	6.0
2.	ISA 200X200X16	8.0
3.	ISA 150X150X16	38.0
4.	ISA 150X150X12	37.0
5.	ISA 130X130X12	57.0
6.	ISA 90X90X10	13.0
7.	ISA 75X75X8	4.0
8.	ISA 75X75X6	4.0
9.	ISA 50X50X6	6.0
10.	ISA 100X100X10	1.0
11.	20 THK PLATE	26.0
	TOTAL	200.0

BHEL-PROJECT ENGINEERING MANAGEMENT(CIVIL)
THIS DRAWING MARKED (✓) IS RELEASED FOR
☐ COMMENTS/APPROVAL ☐ FABRICATION
☐ PLANNING ☐ INFORMATION
☑ CONSTRUCTION
STAMP ALL PREVIOUS REVISION AS SUPERSEDED
ISSUED BY
NAME: ABHAY KUMAR
SIGNATURE: For [signature]
DATE: 24/07/2020

BHEL-PROJECT ENGINEERING MANAGEMENT(CIVIL)
THIS DRAWING MARKED(✓) IS RELEASED FOR
☑ COMMENTS/APPROVAL
☐ PLANNING/INFORMATION
☐ CONSTRUCTION
STAMP ALL PREVIOUS REVISION AS SUPERSEDED
ISSUED BY
NAME: ABHAY KUMAR
SIGNATURE: -Sd-
DATE: 29/01/2020

Signature Not Verified
Digitally signed by B. Prasad
Date: 2020.02.01 14:49:54 IST
Reason: CAT catrel
Location: NTPCEOC
(B. Prasad)

NTPC NO.- 9585-001-315-PVC-C-1294

CUSTOMER: PATRATU VIDYUT UTPADAN NIGAM LIMITED
(A SUBSIDIARY OF NTPC LTD)

3x800MW PATRATU SUPER THERMAL POWER PROJECT

JOB NO.	434
STATUS	
DISTRIBUTION	

REV	DATE	ALTD	CHD	APPD

BHARAT HEAVY ELECTRICALS LTD
POWER SECTOR
PROJECT ENGINEERING MANAGEMENT
NOIDA

COPY RIGHT AND CONFIDENTIAL
The information on this document is the property of BHARAT HEAVY ELECTRICALS LIMITED it must not be used directly or indirectly in any way deterimental to the interest of the company.

DEPT CODE		NAME	SIGN	DATE
C	DRN	DK/SD	-SD-	29/01/2020
	DESN	LG	-SD-	29/01/2020
	CHD	ABHAY	-SD-	29/01/2020
	APPD	ABHAY	-SD-	29/01/2020

TITLE: WORKSHOP BUILDING
DETAIL OF ROOF TRUSS

DEPT. | SCALE 1:100 | DRAWING NO. PE-DG-434-645-C007
SHEET 1 OF 1 | REV. 0

SIZE-A1