COPY RIGHT AND CONFIDENTIAL
The information on this document is the property of BHARAT HEAVY ELECTRICALS LIMITED
it must not be used directly or indirectly in any way deterimental to the interest of the company.

COMPUTER FILE NAME:

FIRST ANGLE PROJECTION

ALL DIMENSIONS ARE IN MM

DRAWING No. PE-DG-434-675-C016

CUSTOMER'S DRAWING No. 9585-001-315-PVC-C-1465

NORTH

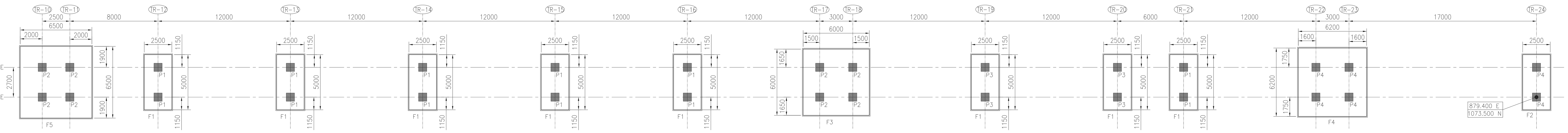

PLAN AT EL(-)1.50M & EL(-)4.00 (B.O.C.)
(SCALE 1:100)

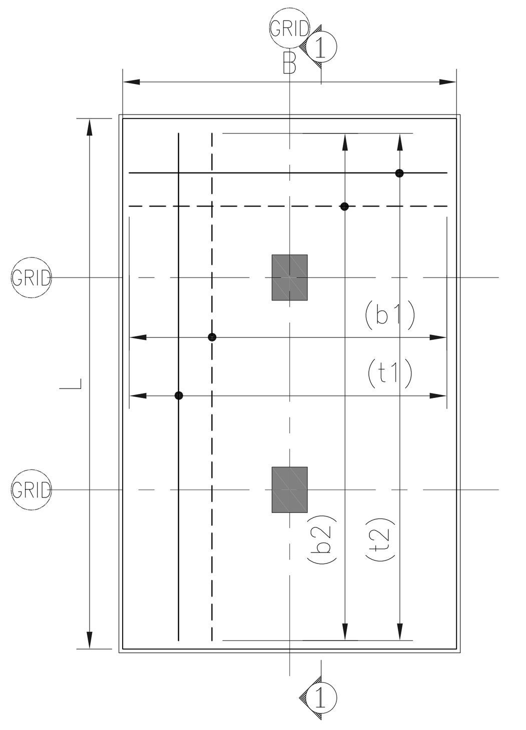

TYP. DETAILS OF COMBINED FOOTING
(L ≥ B)

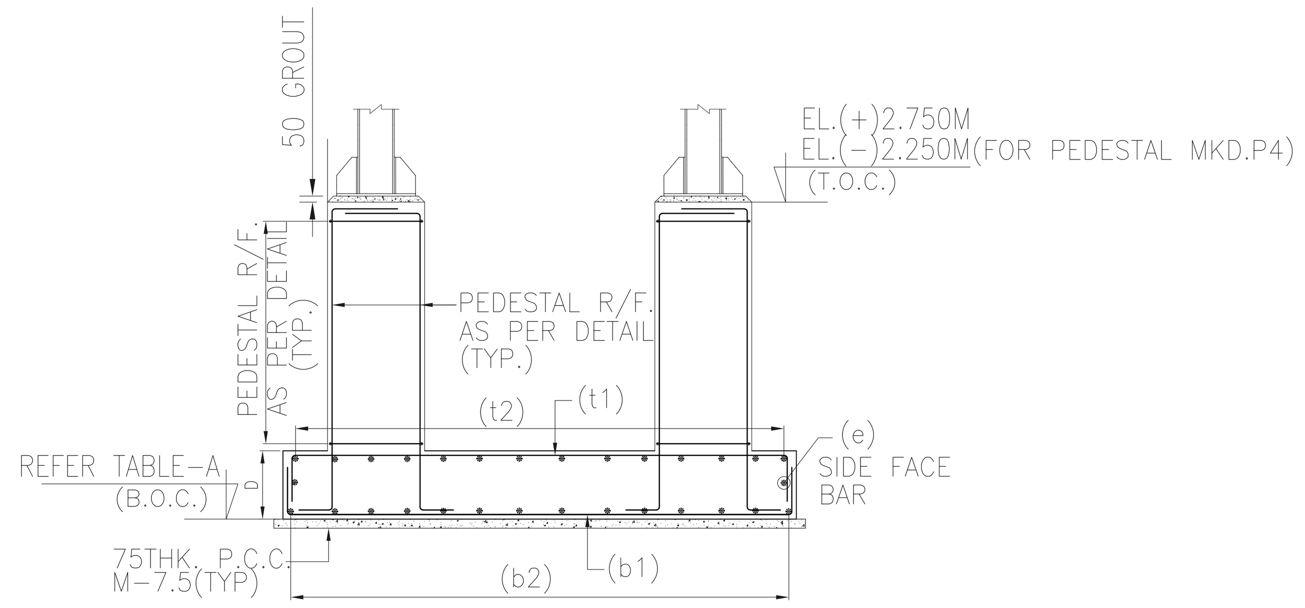

SECTION 1-1
(SCALE 1:50)

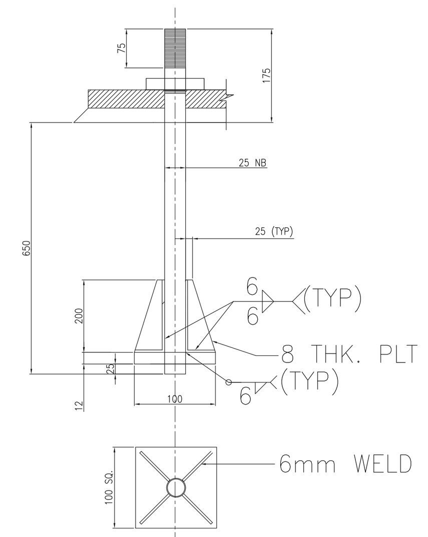

TYP DETAIL OF ANCHOR BOLT
FOR 25 DIA NB

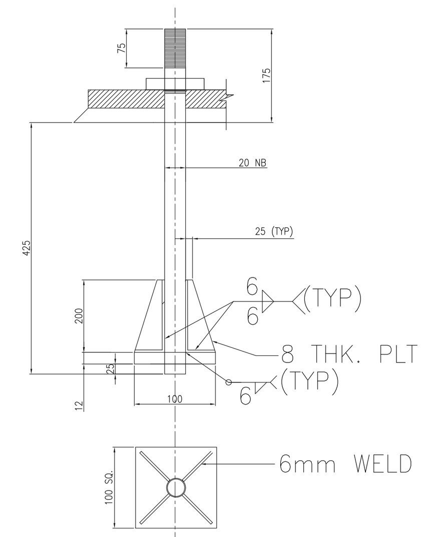

TYP DETAIL OF ANCHOR BOLT
FOR 20 DIA NB

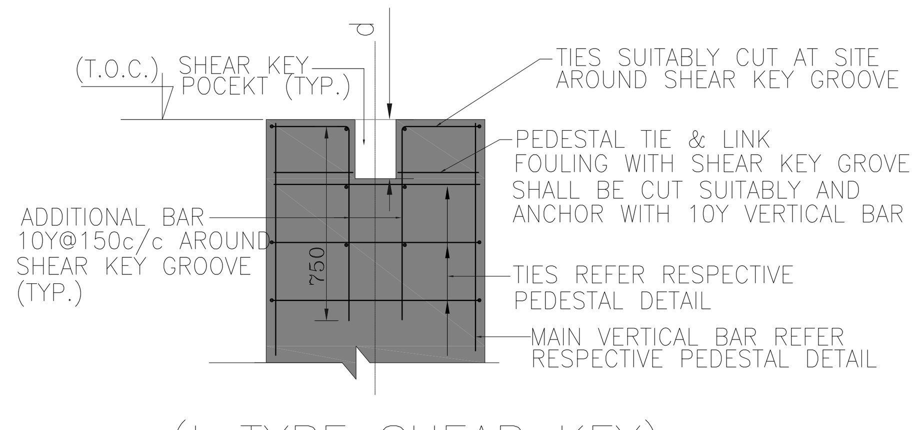

(I-TYPE SHEAR KEY)
DETAIL SHOWING REINF. DET. AROUND SHEAR KEY.
(SCALE 1:25)

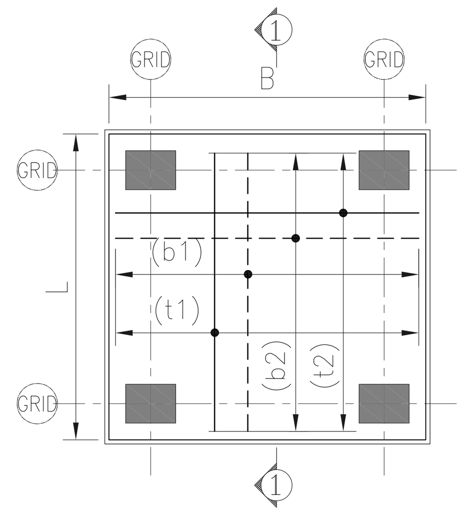

TYP. DETAILS OF COMBINED FOOTING
(L < B)

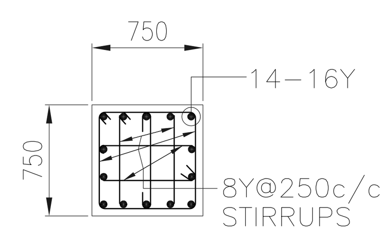

TYP. DETAIL OF PEDESTAL MARKED - P1
(SHOWING REINFORCEMENT ONLY)
(SCALE 1:50)

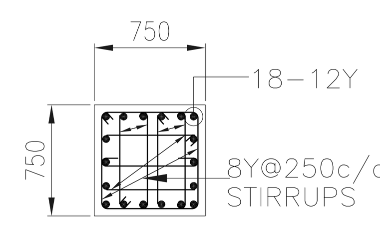

TYP. DETAIL OF PEDESTAL MARKED - P2
(SHOWING REINFORCEMENT ONLY)
(SCALE 1:50)

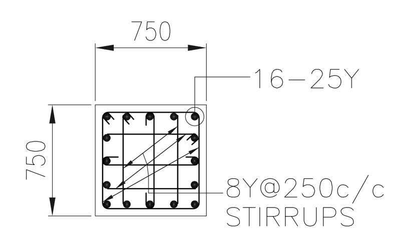

TYP. DETAIL OF PEDESTAL MARKED - P3
(SHOWING REINFORCEMENT ONLY)
(SCALE 1:50)

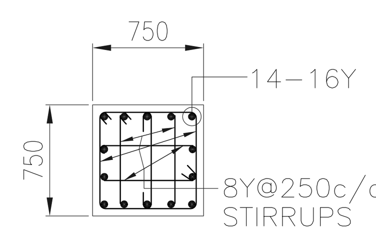

TYP. DETAIL OF PEDESTAL MARKED - P4
(SHOWING REINFORCEMENT ONLY)
(SCALE 1:50)

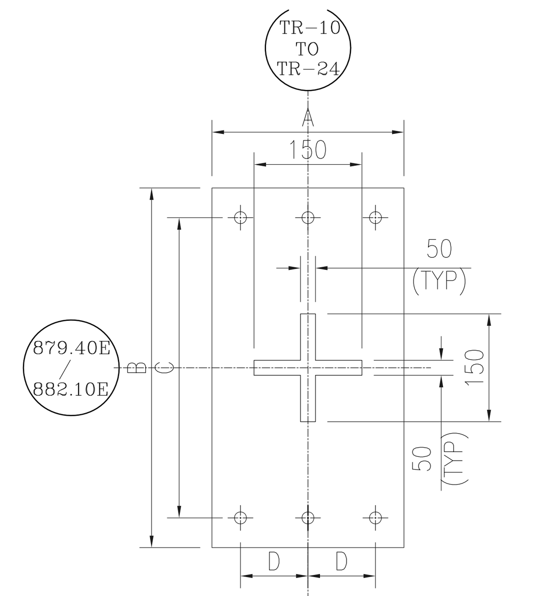

DETAILS OF SHEAR KEY POCI
(SHEAR KEY TYPE-I)
(REFER TABLE-B)

TABLE-A

SCHEDULE OF FOOTING REINFORCEMENT

S.NO.	FOOTING MKD.	FOOTING SIZE		DEPTH	ALONG L (N-S)		ALONG B (E-W)		SIDE FACE R/F	B.O.C
		L (N-S)	B (E-W)	(D)	BAR MKD.'b1' (BOTTOM)	BAR MKD.'t1' (TOP)	BAR MKD.'b2' (BOTTOM)	BAR MKD.'t2' (TOP)	BAR MKD.'e'	
1	F1	2500	5000	350	10Y@200c/c	10Y@200c/c	10Y@200c/c	10Y@200c/c	–	EL(-)1.50
2	F2	2500	5000	350	10Y@175c/c	10Y@175c/c	10Y@175c/c	10Y@175c/c	–	EL(-)4.00
3	F3	6000	6000	450	12Y@150c/c	12Y@150c/c	12Y@150c/c	12Y@150c/c	–	EL(-)1.50
4	F4	6200	6200	400	12Y@200c/c	12Y@200c/c	12Y@200c/c	12Y@200c/c	–	EL(-)4.00
5	F5	6500	6500	500	12Y@175c/c	12Y@175c/c	12Y@175c/c	12Y@175c/c	–	EL(-)1.50

TABLE-B

Column / Pedestal Mkd.	Size of pedestal (mm)		Foundation Bolt Details				Shear Key Pocket Details				Top Of Pedestal
	Width (B)	Length (A)	No. of Bolts	Dia. of Bolts	C	D	E	F	d	Type	
	Along Z	Along X	(N)	(Φ)	mm	mm					(T.O.C.)
T24-1	750	750	6	20	300	150.0	150	150	150	I-Type	EL(-)2.25
T24-2	750	750	6	20	300	150.0	150	150	150	I-Type	EL(-)2.25
T23-1	750	750	6	25	300	150.0	150	150	150	I-Type	EL(-)2.25
T23-2	750	750	6	25	300	150.0	150	150	150	I-Type	EL(-)2.25
T22-1	750	750	6	25	300	150.0	150	150	150	I-Type	EL(-)2.25
T22-2	750	750	6	25	300	150.0	150	150	150	I-Type	EL(-)2.25
T21-1	750	750	6	20	300	150.0	150	150	150	I-Type	EL(+)2.75
T21-2	750	750	6	20	300	150.0	150	150	150	I-Type	EL(+)2.75
T20-1	750	750	6	20	300	150.0	150	150	150	I-Type	EL(+)2.75
T20-2	750	750	6	20	300	150.0	150	150	150	I-Type	EL(+)2.75
T19-1	750	750	6	20	300	150.0	150	150	150	I-Type	EL(+)2.75
T19-2	750	750	6	20	300	150.0	150	150	150	I-Type	EL(+)2.75
T18-1	750	750	6	20	300	150.0	150	150	150	I-Type	EL(+)2.75
T18-2	750	750	6	20	300	150.0	150	150	150	I-Type	EL(+)2.75
T17-1	750	750	6	20	300	150.0	150	150	150	I-Type	EL(+)2.75
T17-2	750	750	6	20	300	150.0	150	150	150	I-Type	EL(+)2.75
T16-1	750	750	6	20	300	150.0	150	150	150	I-Type	EL(+)2.75
T16-2	750	750	6	20	300	150.0	150	150	150	I-Type	EL(+)2.75
T15-1	750	750	6	20	300	150.0	150	150	150	I-Type	EL(+)2.75
T15-2	750	750	6	20	300	150.0	150	150	150	I-Type	EL(+)2.75
T14-1	750	750	6	20	300	150.0	150	150	150	I-Type	EL(+)2.75
T14-2	750	750	6	20	300	150.0	150	150	150	I-Type	EL(+)2.75
T13-1	750	750	6	20	300	150.0	150	150	150	I-Type	EL(+)2.75
T13-2	750	750	6	20	300	150.0	150	150	150	I-Type	EL(+)2.75
T12-1	750	750	6	20	300	150.0	150	150	150	I-Type	EL(+)2.75
T12-2	750	750	6	20	300	150.0	150	150	150	I-Type	EL(+)2.75
T11-1	750	750	6	25	300	150.0	150	150	150	I-Type	EL(+)2.75
T11-2	750	750	6	25	300	150.0	150	150	150	I-Type	EL(+)2.75
T10-1	750	750	6	25	300	150.0	150	150	150	I-Type	EL(+)2.75
T10-2	750	750	6	25	300	150.0	150	150	150	I-Type	EL(+)2.75

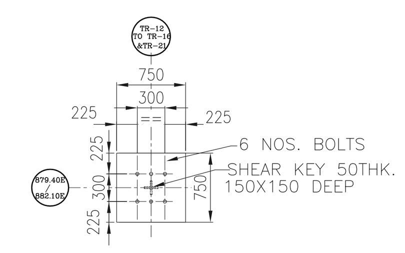

TYP. DETAIL OF PEDESTAL MARKED - P1
(SHOWING BOLT LOCATION ONLY)
(SCALE 1:50)

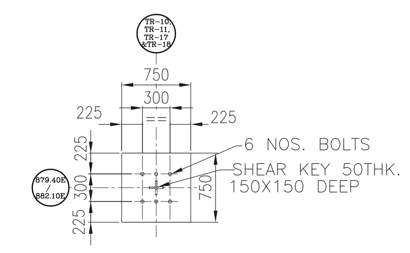

TYP. DETAIL OF PEDESTAL MARKED - P2
(SHOWING BOLT LOCATION ONLY)
(SCALE 1:50)

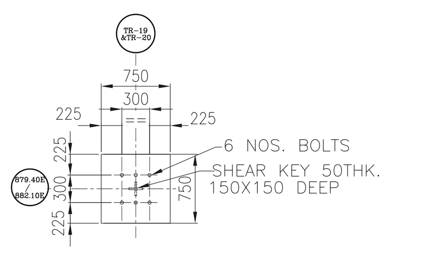

TYP. DETAIL OF PEDESTAL MARKED - P3
(SHOWING BOLT LOCATION ONLY)
(SCALE 1:50)

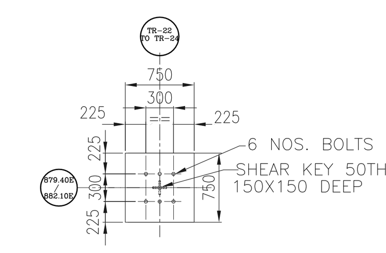

TYP. DETAIL OF PEDESTAL MARKED - P4
(SHOWING BOLT LOCATION ONLY)
(SCALE 1:50)

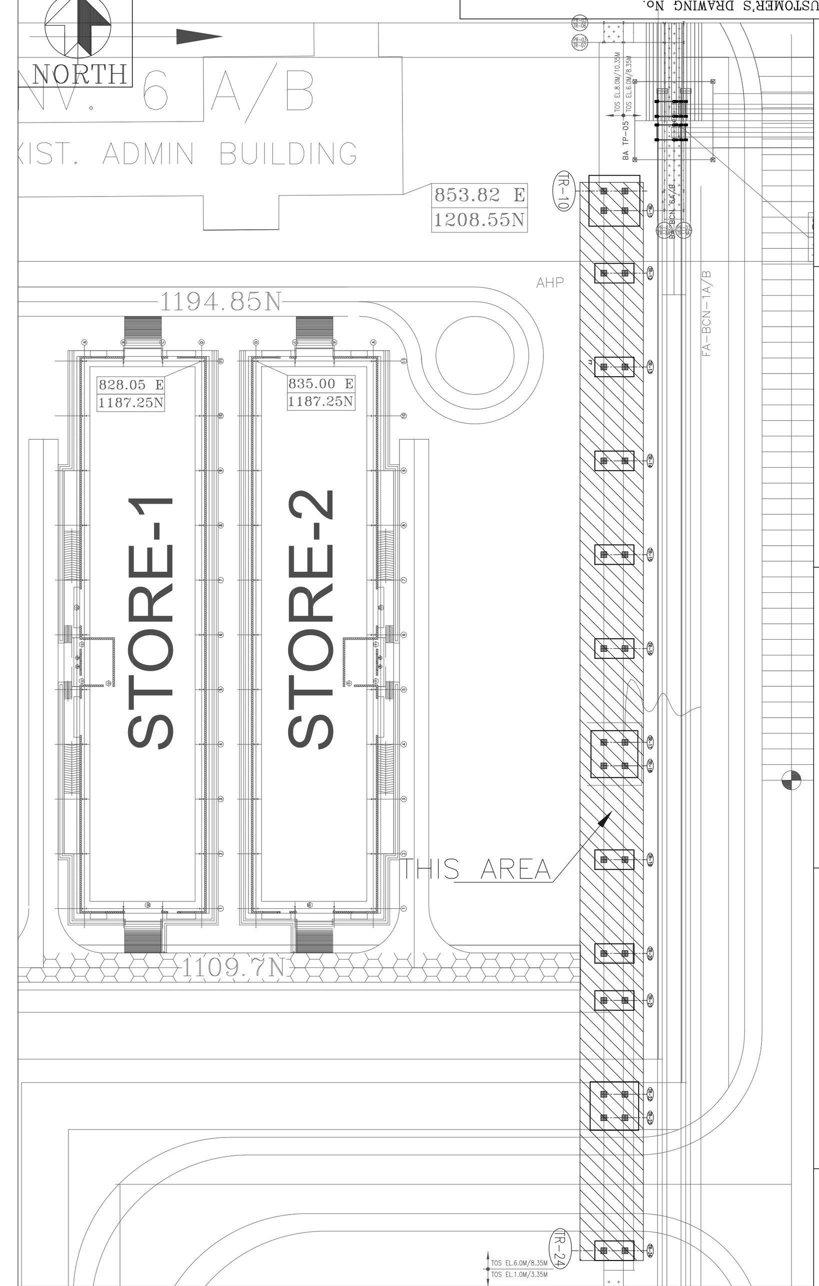

KEY PLAN

Signature Not Verified
Digitally signed by B. Prasad
Date: 2020.02.01 14:16:54 IST
Reason: CAT catrel
Location: NTPCEOC

NOTES:-

1. ALL DIMENSIONS ARE IN MILLIMETERS, CO-ORDINATES & LEVELS IN METERS.
2. ALL ELEVATIONS ARE REFERRED TO FINISHED FLOOR LEVEL OF POWER HOUSE BUILDING AT EL(±)0.00 WHICH CORRESPONDS TO RL (+)375.50M. ABOVE MSL.
3. ALL STRUCTURAL CONCRETE SHALL BE OF GRADE M-25 UNLESS OTHERWISE NOTED.
4. ALL REINFORECEMENT SHALL BE OF HIGH YIELD STRENGTH DEFORMED BARS Fe500D/Fe500 CONFIRMING TO IS:1786 (LATEST).
5. NET SAFE BEARING CAPACITY IS CONSIDERED AS 8 T/SQM AT EL(-)1.50M/EL(-)4.00M LEVEL.
6. FOR CLEAR COVER TO OUTERMOST REINFORCEMENT (INCLUDING TIES) REFER STANDARD DRG NO. 9585-001-315-PVC-C-0451B.
7. BACK FILLING SHALL HAVE TO BE DONE ENSURING PROPER COMPACTION AND AS PER SPECIFICATION USING EARTH SOIL. BACK FILLING SHALL BE CARRIED OUT IN LAYERS NOT EXCEEDING 300 MM. AND EACH LAYER TO BE COMPACTED SO AS TO ACHIEVE ATLEAST 90% COMPACTION AS PER STANDARD PROCTOR DENSITY TEST.
8. BOTTOM 300MM EXCAVATION TO BE DONE CAREFULLY TO AVOID OVER EXCAVATION AND PCC TO BE DONE IMMEDIATELY AFTER EXCAVATION AND COMPACTION.
9. QUANTITIES INDICATED IN BILL OF MATERIALS ARE APPROXIMATE AND DO NOT INCLUDE FOR SPLICING & WASTAGES.
10. FOR ALL OTHER NOTES GRADE OF STEEL REFER DRG. NO. 9585-001-315-PVC-C-0089A

ENGINEERING REFERENCE DRAWING:

1. PE-DG-434-100-M001 - PLOT PLAN(R4) (9585-001-999-POC-F-001)
2. PE-DG-434-100-M054-R2 - YARD PIPING & TRESTLE LAYOUT 3&4 (AREA FROM BOILER, ESP UNIT-1 TO FOPH FACILITIES. (9585-001-999-PGM-F-0102)

CONSTRUCTION REFERENCE DRAWING:

1. PE-DG-434-675-C017 - PIPE RACK PR-3-BOP AREA-STRUCTURAL LAYOUT & DETAIL (9585-001-315-PVC-C-1466)
2. PE-DG-434-675-C018 - PIPE RACK PR-3-BOP AREA-STRUCTURAL LAYOUT & DETAIL (9585-001-315-PVC-C-1467)

BHEL-PROJECT ENGINEERING MANAGEMENT(CIVIL)
THIS DRAWING MARKED (✓) IS RELEASED FOR
☐ COMMENTS/APPROVAL ☐ FABRICATION
☐ PLANNING ☐ INFORMATION
☑ CONSTRUCTION
STAMP ALL PREVIOUS REVISION AS SUPERSEDED
ISSUED BY

NAME	ABHAY KUMAR
SIGNATURE	For [signature]
DATE	11/02/2020

SPECIAL NOTES

DRAWINGS / DOCUMENTS ARE BEING SUBMITTED FOR INFORMATION. BHEL HEREBY CONFIRMS FULL COMPLIANCE TO ALL THE SPECIFIED REQUIREMENTS OF THE CONTRACT SPECIFICATION, WITHOUT ANY DEVIATION, WHATSOEVER. IN CASE DURING THE TENURE OF THE CONTRACT, IT IS OBSERVED/FOUND THAT THE DATA/ INFORMATION IN THE RELEASED DRAWING/DOCUMENT IS NOT MEETING THE CONTRACT SPECIFICATION, BHEL/ITS VENDOR(S) WILL MODIFY/ RECTIFY/REEPLACE THE SAME TO MEET THE SPECIFICATION WITHOUT ANY COMMERCIAL IMPLICATION OR ANY TIME EXTENSION TO PVUNL/NTPC IN THIS REGARD.

BILL OF MATERIAL:-

SL.NO.	ITEM	UNIT	WT. (MT)
1	RCC (M25)	Cu.M	151
2	PCC	Cu.M	25
3	REINFORCEMENT		
	8MM TMT	MT	1.45
	10MM TMT	MT	2.10
	12MM TMT	MT	3.50
	16MM TMT	MT	1.55
	25MM TMT	MT	2.65
	TOTAL		11.25 T

BHEL-PROJECT ENGINEERING MANAGEMENT(CIVIL)
THIS DRAWING MARKED(✓) IS RELEASED FOR
☑ COMMENTS/APPROVAL
☐ PLANNING/INFORMATION
☐ CONSTRUCTION
STAMP ALL PREVIOUS REVISION AS SUPERSEDED
ISSUED BY

NAME	ABHAY KUMAR
SIGNATURE	-Sd-
DATE	22/01/2020

NTPC DWG. NO. 9585-001-315-PVC-C-1465

CUSTOMER
NTPC
NTPC LIMITED

3X800MW PATRATU SUPER THERMAL POWER PROJECT

JOB NO.	434
STATUS	
DISTRIBUTION	

REV.	DATE	ALTD	CHD	APPD	REV.	DATE	ALTD	CHD	APPD	REV.	DATE	ALTD	CHD	APPD

BHEL
Maharatna Company
BHARAT HEAVY ELECTRICALS LTD
POWER SECTOR
PROJECT ENGINEERING MANAGEMENT
NOIDA

COPY RIGHT AND CONFIDENTIAL
The information on this document is the property of BHARAT HEAVY ELECTRICALS LIMITED it must not be used directly or indirectly in any way deterimental to the interest of the company.

DEPT CODE		NAME	SIGN	DATE
C	DRN	SUCHITRA	-SD-	22/01/2020
	DESN	ANSHU	-SD-	22/01/2020
	CHD	ABHAY	-SD-	22/01/2020
	APPD	AKS	-SD-	22/01/2020

TITLE
PIPE RACK PR-3
BOP AREA-GA & RC DETAIL OF FOUNDATION & PEDESTAL

DEPT.	SCALE 1:100	DRAWING NO. PE-DG-434-675-C016
SIGN		SHEET 1 OF 1 REV. R0

SIZE-A0