DRAWING No. PE-DG-434-675-C020

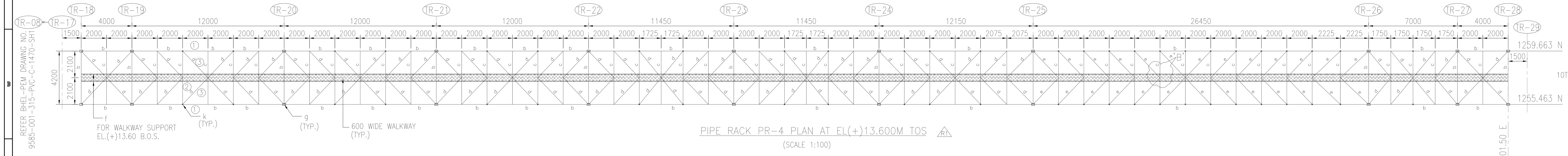

PIPE RACK PR-4 PLAN AT EL(+)13.600M TOS
(SCALE 1:100)

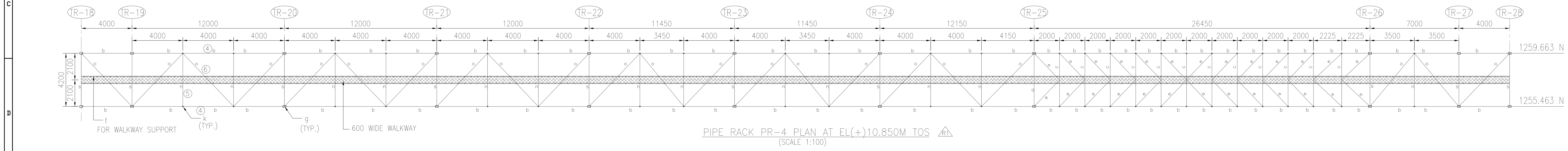

PIPE RACK PR-4 PLAN AT EL(+)10.850M TOS
(SCALE 1:100)

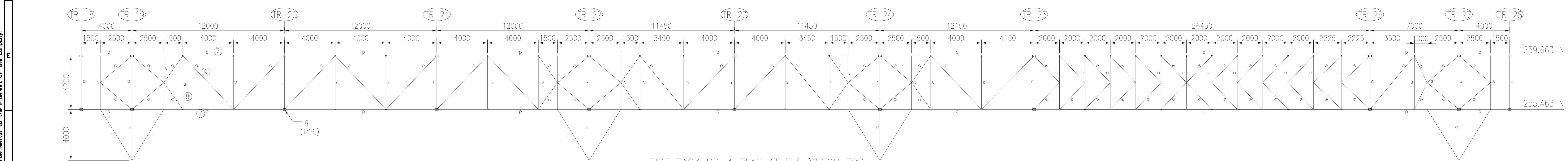

PIPE RACK PR-4 PLAN AT EL(+)8.50M TOS
(SCALE 1:100)

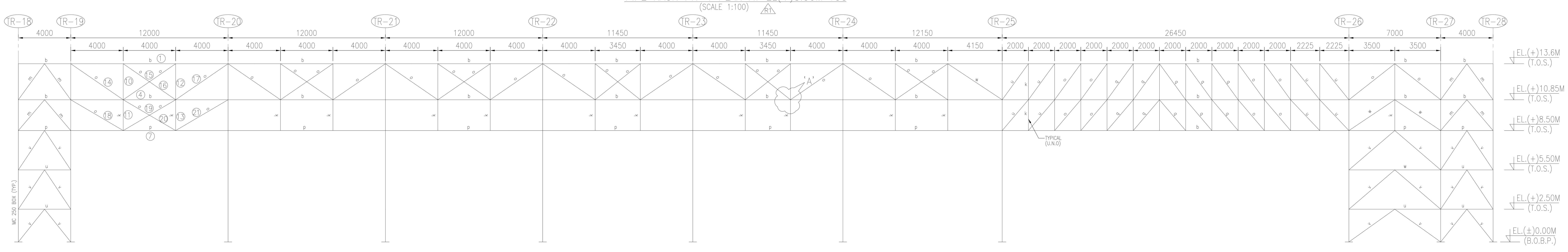

PIPE RACK PR-4 ELEVATION ALONG 1259.663 N
(SCALE 1:100)

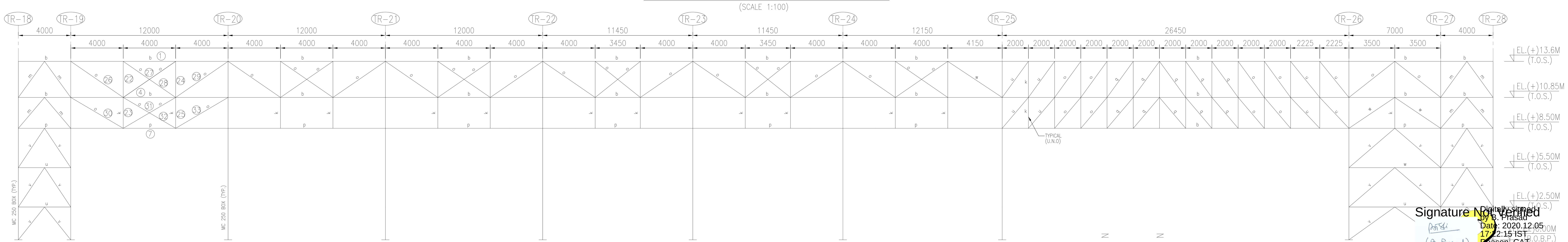

PIPE RACK PR-4 ELEVATION ALONG 1255.463 N
(SCALE 1:100)

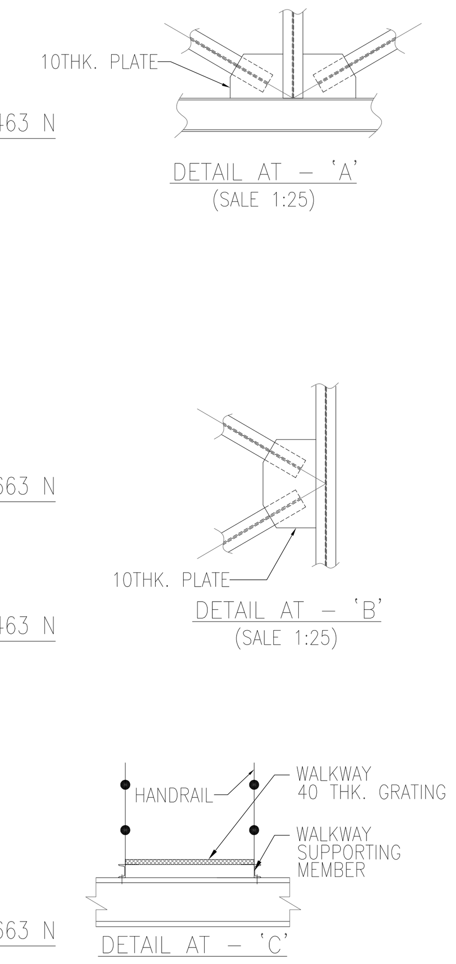

DETAIL AT - 'A'
(SALE 1:25)

DETAIL AT - 'B'
(SALE 1:25)

DETAIL AT - 'C'

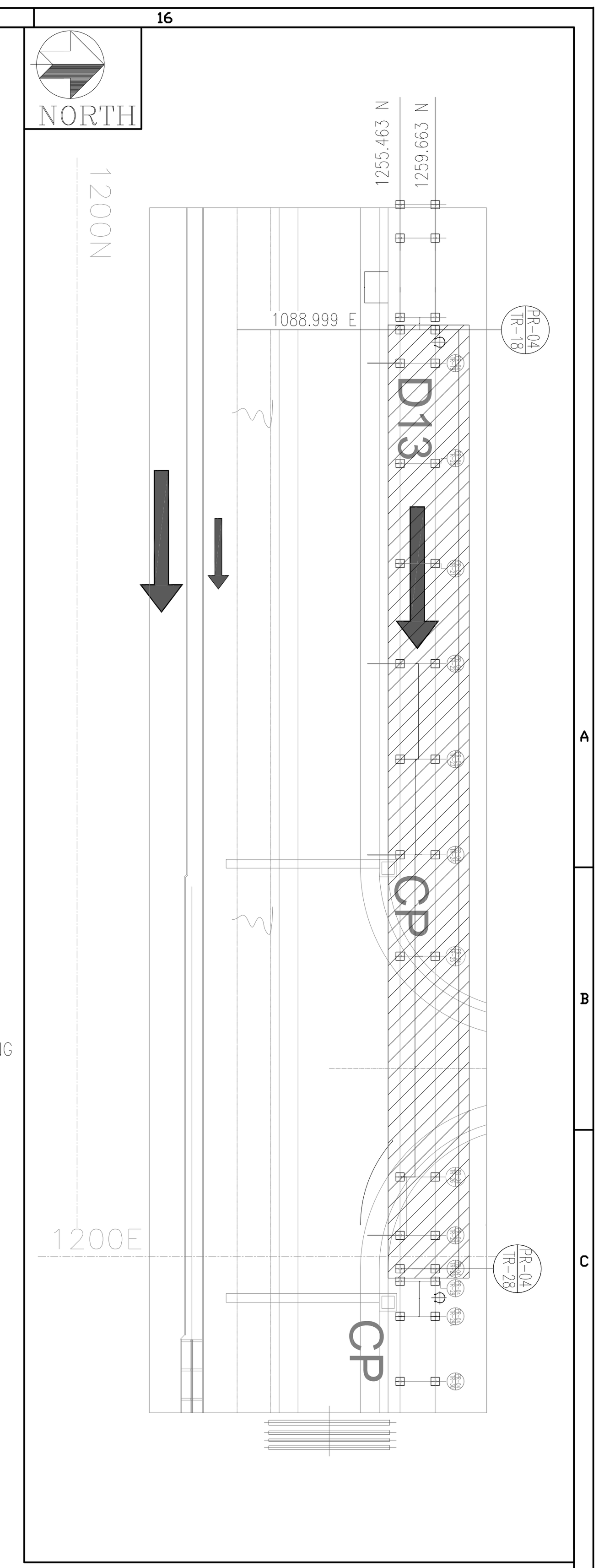

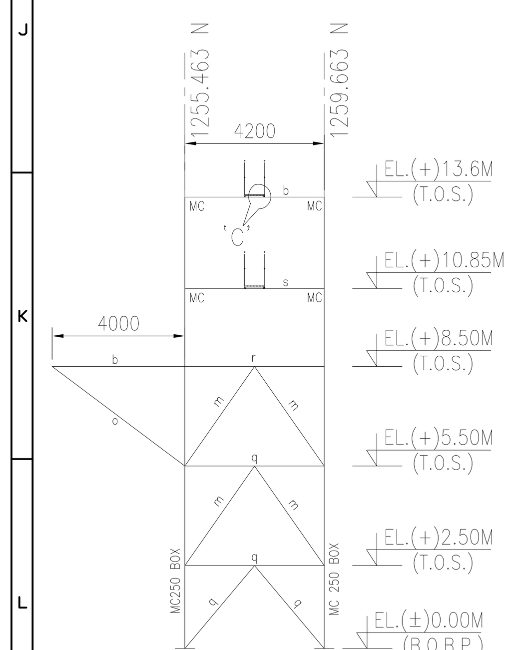

PIPE RACK PR-4 ELEVATION ALONG TR-22 & 24
(SCALE 1:100)

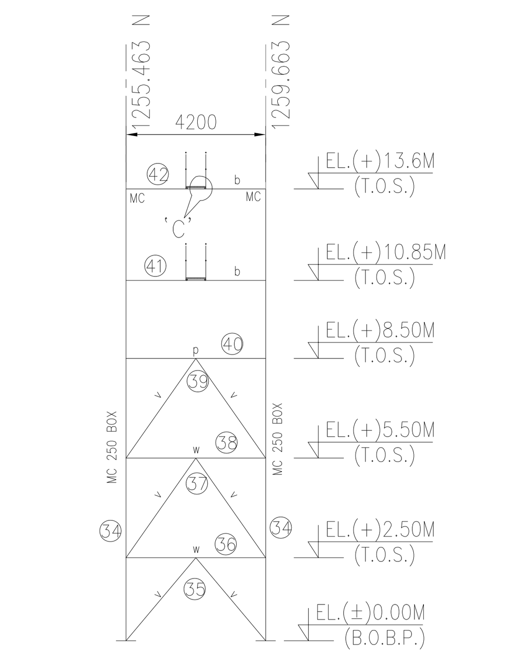

PIPE RACK PR-4 ELEVATION ALONG TR-23
(SCALE 1:100)

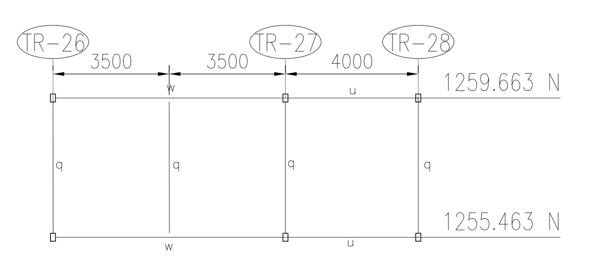

PLAN AT EL(+)5.50M T.O.S
(SCALE 1:100)

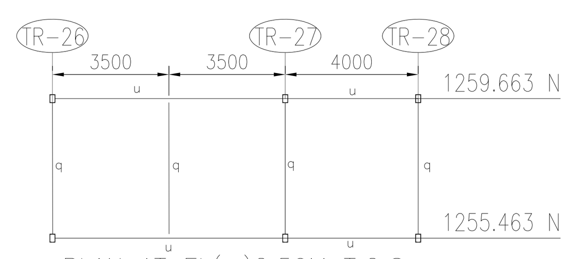

PLAN AT EL(+)2.50M T.O.S
(SCALE 1:100)

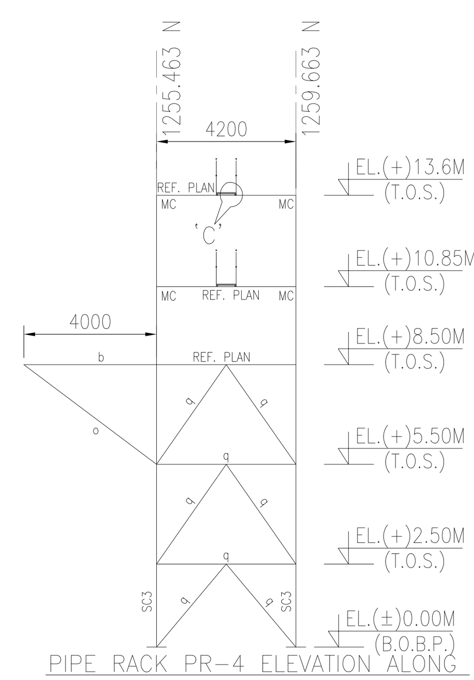

PIPE RACK PR-4 ELEVATION ALONG TR-19 & 27
(SCALE 1:100)

NOTES:-

1. ALL DIMENSIONS ARE IN MILLIMETERS, CO-ORDINATES & LEVELS IN METERS.
2. ALL ELEVATIONS ARE REFERRED TO FINISHED FLOOR LEVEL OF POWER HOUSE BUILDING AT EL(±)0.00 WHICH CORRESPONDS TO RL (+)375.50M. ABOVE MSL.
3. UNLESS NOTED OTHERWISE, END CONNECTION OF BEAMS SHALL BE DESIGNED FOR A MIN OF 60% OF BEAM SHEAR CAPACITY OR FORCES INDICATED ON THE DWG. IN CASE OF BEAM WITH ADDITIONAL FLANGE PLATES THIS PERCENTAGE SHALL BE 80%
4. ALL MC (MOMENT CONNECTION) TO BE DESIGNED FOR FULL CAPACITY.
5. THIS DRAWING SHALL BE READ IN CONJUNCTION WITH CONTRACT TERMS AND CONDITIONS, TECHNICAL SPECIFICATIONS AND SCHEDULE OF ITEMS.
6. FOR OTHER NOTES AND STD. DETAILS REF. DRG. PE-DG-434-600-C002 (NTPC DRG NO. 9585-001-315-PVC-C-0089A)
7. CONNECTION DETAILS SHOWN ARE INDICATIVE ONLY. SIZE & THICKNESS OF GUSSETS, NO. & DIA. OF CONNECTION BOLTS ETC. SHALL BE DESIGNED & DETAILED BY FABRICATOR AND SHALL BE SHOWN IN CORRESPONDING FABRICATION DRG.
8. COLUMN BASE SURFACE & BOTTOM FACE OF VERTICAL STIFFENERS SHALL BE PROPERLY MACHINED BEFORE WELDING TO BASE PLATE.
9. LOCATION OF COLUMN SPLICES TO BE DECIDED BY MANUFACTURING UNIT BASED ON AVAILABILITY OF PLATE SIZES AND TRANSPORTATION PLAN TO SITE. SPLICE DETAILS MAY BE REFERRED FROM GENERAL NOTES DRG. NO.- PE-DG-434-600-C002 (NTPC DRG NO. 9585-001-315-PVC-C-0089A)

ENGINEERING REFERENCE DRAWING:

1. PE-DG-434-100-M001 - PLOT PLAN (9585-001-999-POC-F-001)
2. PE-DG-434-100-M002 - MAIN EQUIPMENT LAYOUT PLAN AT 0.00M (9585-001-999-PGM-F-001)
3. PE-DG-434-100-E041 - CABLING LAYOUT FROM MAIN POWER HOUSE TO BOILER AREA. (9585-001-200-PVE-F-120)

CONSTRUCTION REFERENCE DRAWING:

1. PE-DG-434-675-C003 - PIPE RACK-MILL BUNKER U-1-FND LAYOUT & DETAILS (9585-001-315-PVC-C-1452A)

LEGEND:

1. TOS = TOP OF STEEL
2. BOS = BOTTOM OF STEEL
3. F/S = FAR SIDE (WHEN VIEWED FROM ROW A TO B)
4. N/S = NEAR SIDE (WHEN VIEWED FROM ROW A TO B)
5. UNO = UNLESS NOTED OTHERWISE
6. TYP. = TYPICAL
7. B/S = BOTH SIDE
8. THK. = THICK
9. PLT. = PLATE
10. MC = MOMENT CONNECTION

ERECTION SEQUENCE:

ERECTION SEQUENCE (TYPICAL)

1. SET-1 : MEMBER MARKED (1) TO (33) TO BE SHOP WELDED & COMPLETE ASSEMBLY SHALL BE FIELD BOLTED WITH COLUMN ON GRID LOCATION.
2. SET-2 : WALKWAY SUPPORTING MEMBER MARKED IN RESPECTIVE LEVEL PLAN SHALL BE FIELD BOLTED WITH SET-1.
3. SET-3 : MEMBER MARKED (34) TO (42) SHALL BE SHOP WELDED & COMPLETE ASSEMBLY SHALL BE FILED BOLTED WITH SET-1 AT SITE.

Signature Not Verified
Digitally signed by B. Prasad
Date: 2020.12.05 17:22:15 IST
Reason: CAT
Location: NTPCEOC
(B. Prasad)

(Grade of Steel ...)

S NO.	MARK	MEMBERS SIZE	
1.	a	WEB-1X210X16THK. FLANGE-2X160X20THK.	web flange
2.	b	ISMB 250	
3.	c	ISMC 250	
4.	d	50X50X6	
5.	e	65X65X8	
6.	f	ISMC 75	
7.	g	ISMC 250 BOX	
8.	h	ISMC 300	
9.	j	ISMC 400	
10.	k	ISMC 75 BOX	
11.	m	90X90X10	
12.	n	WEB-1X226X12THK. FLANGE-2X160X12THK.	web flange
13.	o	90X90X8	
14.	p	NPB 300X150X42.2	
15.	q	75X75X8	
16.	r	WEB-1X200X16THK. FLANGE-2X160X25THK.	web flange
17.	s	WEB-1X218X12THK. FLANGE-2X160X16THK.	web flange
18.	t	NPB 400X180X57.4	
19.	u	100X100X10	
20.	v	130X130X10	
21.	w	110X110X10	

SPECIAL NOTE

DRAWINGS / DOCUMENTS ARE BEING SUBMITTED FOR INFORMATION. BHEL HEREBY CONFIRMS FULL COMPLIANCE TO ALL THE SPECIFIED REQUIREMENTS OF THE CONTRACT SPECIFICATION, WITHOUT ANY DEVIATION, WHATSOEVER. IN CASE DURING THE TENURE OF THE CONTRACT, IT IS OBSERVED/FOUND THAT THE DATA/ INFORMATION IN THE RELEASED DRAWING/DOCUMENT IS NOT MEETING THE CONTRACT SPECIFICATION, BHEL/ITS VENDOR(S) WILL MODIFY/ RECTIFY/REPLACE THE SAME TO MEET THE SPECIFICATION WITHOUT ANY COMMERCIAL IMPLICATION OR ANY TIME EXTENSION TO PVUNL/NTPC IN THIS REGARD.

BHEL-PROJECT ENGINEERING MANAGEMENT(CIVIL)
THIS DRAWING MARKED (✓) IS RELEASED FOR
- [ ] COMMENTS/APPROVAL
- [ ] FABRICATION
- [ ] PLANNING
- [ ] INFORMATION
- [x] CONSTRUCTION

STAMP ALL PREVIOUS REVISION AS SUPERSEDED

ISSUED BY

NAME	ABHAY KUMAR
SIGNATURE	For [signature]
DATE	07/12/2020

BHEL-PROJECT ENGINEERING MANAGEMENT(CIVIL)
THIS DRAWING MARKED(✓) IS RELEASED FOR
- [x] COMMENTS/APPROVAL
- [ ] PLANNING/INFORMATION
- [ ] CONSTRUCTION

STAMP ALL PREVIOUS REVISION AS SUPERSEDED

ISSUED BY

NAME	ABHAY KUMAR
SIGNATURE	-Sd-
DATE	27/11/2020

NTPC. DRAWING NO. - 9585-001-315-PVC-C-1469

CUSTOMER: NTPC LIMITED

3x800MW PATRATU SUPER THERMAL POWER PROJECT

JOB NO.	434
STATUS	
DISTRIBUTION	

BHARAT HEAVY ELECTRICALS LTD
POWER SECTOR
PROJECT ENGINEERING MANAGEMENT
NOIDA

COPY RIGHT AND CONFIDENTIAL
The information on this document is the property of BHARAT HEAVY ELECTRICALS LIMITED it must not be used directly or indirectly in any way deterimental to the interest of the company.

DEPT CODE		NAME	SIGN	DATE
C	DRN	DEEPAK	Deepak Kr	28/04/2020
	DESN	SONAM	-SD-	28/04/2020
	CHD	ABHAY	-SD-	28/04/2020
	APPD	AKS	-SD-	28/04/2020

REV	DATE	ALTD	CHD	APPD
01	27.11.20	SAVITA	SG	AK

REVISED AS MARKED (R1)
PIPE LOADING REVISED

TITLE: PIPE RACK PR-4/ BOP AREA STRUCTURAL LAYOUT & DETAILS

DEPT. | SCALE 1:100 | DRAWING NO. PE-DG-434-675-C020
SHEET 1 OF 2 | REV. R2

SIZE-A1

COPY RIGHT AND CONFIDENTIAL
The information on this document is the property of BHARAT HEAVY ELECTRICALS LIMITED
It must not be used directly or indirectly in any way deterimental to the interest of the company.

COMPUTER FILE NAME:

DRAWING NO. PE-DG-434-675-C020

FIRST ANGLE PROJECTION | ALL DIMENSIONS ARE IN MM

COPY RIGHT AND CONFIDENTIAL
The information on this document is the property of BHARAT HEAVY ELECTRICALS LIMITED
It must not be used directly or indirectly in any way detrimental to the interest of the company.

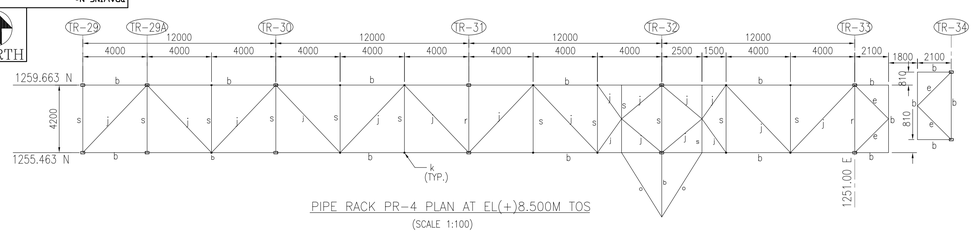

PIPE RACK PR-4 PLAN AT EL(+)8.500M TOS
(SCALE 1:100)

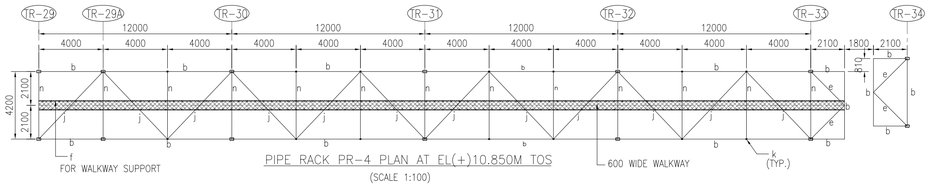

PIPE RACK PR-4 PLAN AT EL(+)10.850M TOS
(SCALE 1:100)

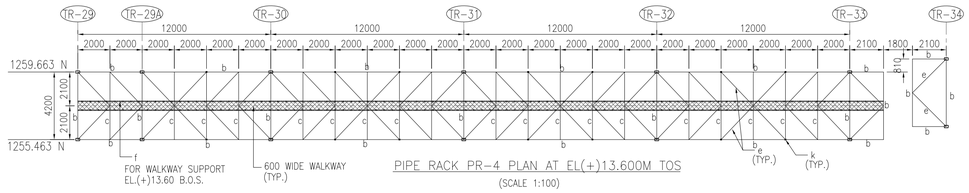

PIPE RACK PR-4 PLAN AT EL(+)13.600M TOS
(SCALE 1:100)

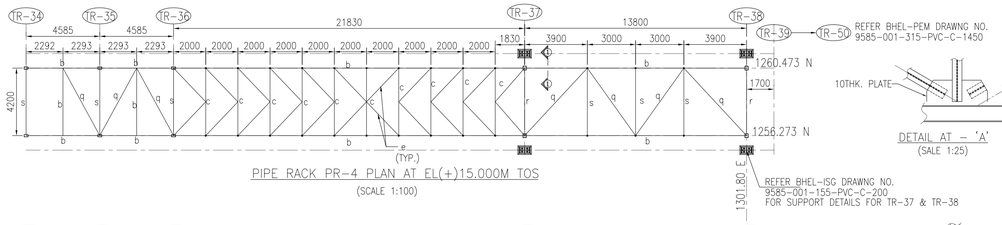

PIPE RACK PR-4 PLAN AT EL(+)15.000M TOS
(SCALE 1:100)

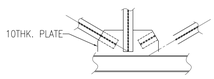

DETAIL AT – 'A'
(SALE 1:25)

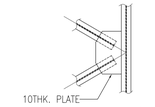

DETAIL AT – 'B'
(SALE 1:25)

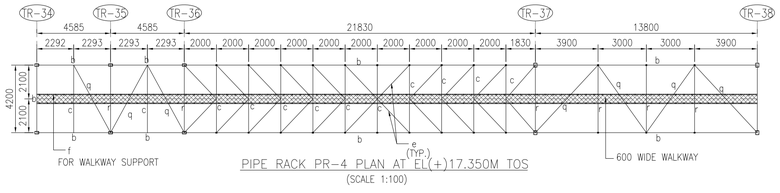

PIPE RACK PR-4 PLAN AT EL(+)17.350M TOS
(SCALE 1:100)

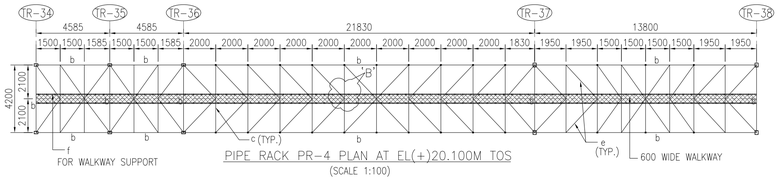

PIPE RACK PR-4 PLAN AT EL(+)20.100M TOS
(SCALE 1:100)

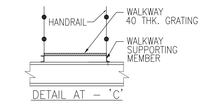

DETAIL AT – 'C'

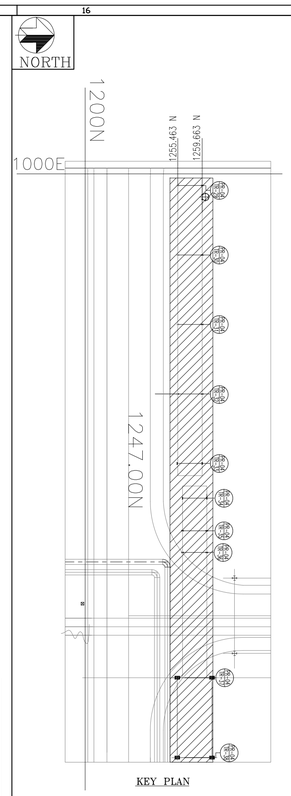

KEY PLAN

NOTES:–

1. ALL DIMENSIONS ARE IN MILLIMETERS, CO-ORDINATES & LEVELS IN METERS.
2. ALL ELEVATIONS ARE REFERRED TO FINISHED FLOOR LEVEL OF POWER HOUSE BUILDING AT EL(±)0.00 WHICH CORRESPONDS TO RL (+)375.50M. ABOVE MSL.
3. UNLESS NOTED OTHERWISE, END CONNECTION OF BEAMS SHALL BE DESIGNED FOR A MIN. OF 60% OF BEAM SHEAR CAPACITY OR FORCES INDICATED ON THE DWG. IN CASE OF BEAM WITH ADDITIONAL FLANGE PLATES THIS PERCENTAGE SHALL BE 80%
4. ALL MC (MOMENT CONNECTION) TO BE DESIGNED FOR FULL CAPACITY.
5. THIS DRAWING SHALL BE READ IN CONJUNCTION WITH CONTRACT TERMS AND CONDITIONS, TECHNICAL SPECIFICATIONS AND SCHEDULE OF ITEMS.
6. FOR OTHER NOTES AND STD. DETAILS REF. DRG. PE-DG-434-600-C002 (NTPC DRG NO. 9585-001-315-PVC-C-0089A)
7. CONNECTION DETAILS SHOWN ARE INDICATIVE ONLY. SIZE & THICKNESS OF GUSSETS, NO. & DIA. OF CONNECTION BOLTS ETC. SHALL BE DESIGNED & DETAILED BY FABRICATOR AND SHALL BE SHOWN IN CORRESPONDING FABRICATION DRG.
8. COLUMN BASE SURFACE & BOTTOM FACE OF VERTICAL STIFFENERS SHALL BE PROPERLY MACHINED BEFORE WELDING TO BASE PLATE.
9. LOCATION OF COLUMN SPLICES TO BE DECIDED BY MANUFACTURING UNIT BASED ON AVAILABILITY OF PLATE SIZES AND TRANSPORTATION PLAN TO SITE. SPLICE DETAILS MAY BE REFERRED FROM GENERAL NOTES DRG. NO.– PE-DG-434-600-C002 (NTPC DRG NO. 9585-001-315-PVC-C-0089A)

ENGINEERING REFERENCE DRAWING:

1. PE-DG-434-100-M001 – PLOT PLAN (9585-001-999-POC-F-001)
2. PE-DG-434-100-M002 – MAIN EQUIPMENT LAYOUT PLAN AT 0.00M (9585-001-999-PGM-F-001)
3. PE-DG-434-100-E041 – CABLING LAYOUT FROM MAIN POWER HOUSE TO BOILER AREA. (9585-001-200-PVE-F-120)

CONSTRUCTION REFERENCE DRAWING:

1. PE-DG-434-675-C003 – PIPE RACK–MILL BUNKER U–1–FND LAYOUT & DETAILS (9585-001-315-PVC-C-1452A)

LEGEND:

1. TOS = TOP OF STEEL
2. BOS = BOTTOM OF STEEL
3. F/S = FAR SIDE (WHEN VIEWED FROM ROW A TO B)
4. N/S = NEAR SIDE (WHEN VIEWED FROM ROW A TO B)
5. UNO = UNLESS NOTED OTHERWISE
6. TYP. = TYPICAL
7. B/S = BOTH SIDE
8. THK. = THICK
9. PLT. = PLATE
10. MC = MOMENT CONNECTION

ERECTION SEQUENCE:

ERECTION SEQUENCE (TYPICAL)

KINDLY FOLLOW THE SAME SEQUENCE AS PROVIDED IN SHEET 1.

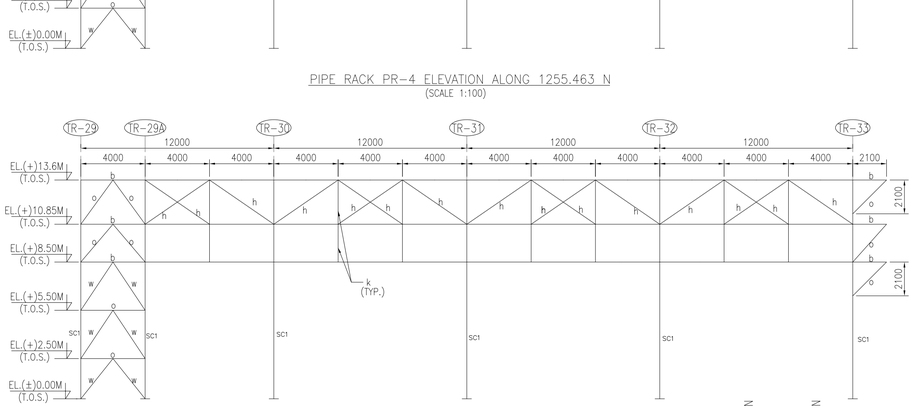

PIPE RACK PR-4 ELEVATION ALONG 1255.463 N
(SCALE 1:100)

PIPE RACK PR-4 ELEVATION ALONG 1259.663 N
(SCALE 1:100)

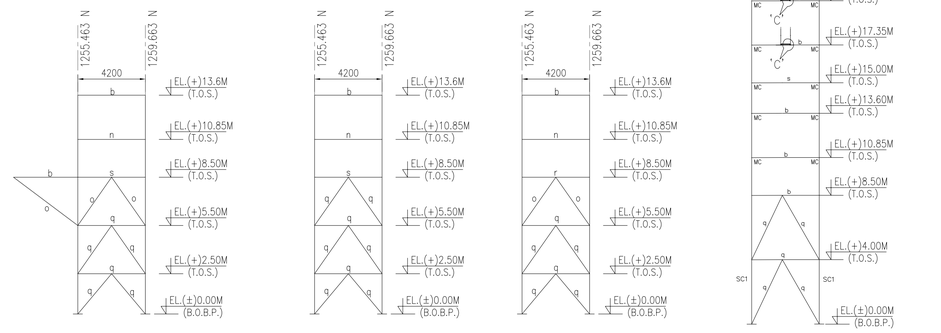

PIPE RACK PR-4 ELEVATION ALONG TR-32
(SCALE 1:100)

PIPE RACK PR-4 ELEVATION ALONG TR-29 & 29A
(SCALE 1:100)

PIPE RACK PR-4 ELEVATION ALONG TR-31 & 33
(SCALE 1:100)

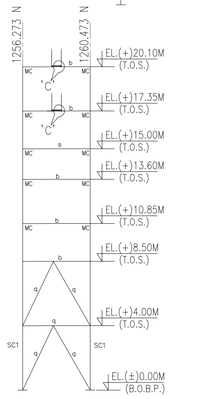

PIPE RACK PR-4 ELEVATION ALONG TR-34
(SCALE 1:100)

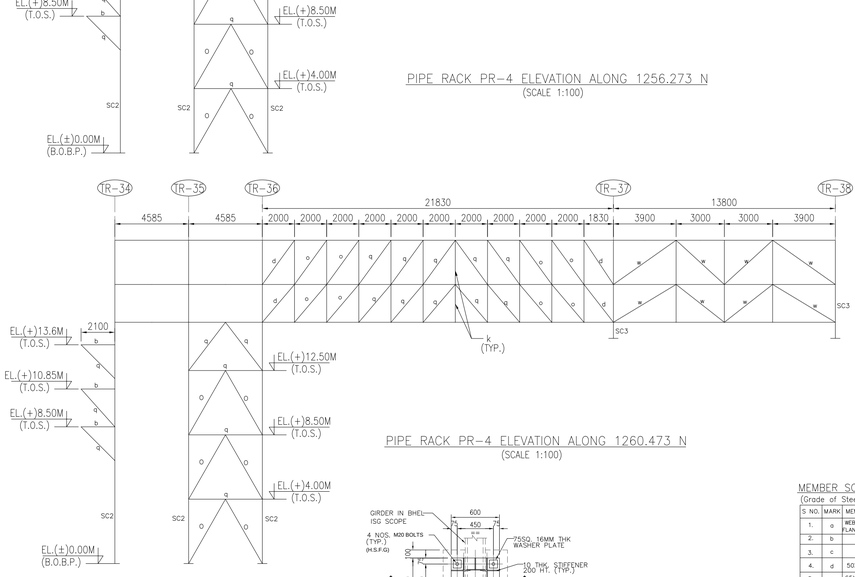

PIPE RACK PR-4 ELEVATION ALONG 1256.273 N
(SCALE 1:100)

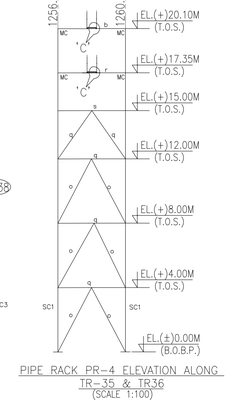

PIPE RACK PR-4 ELEVATION ALONG TR-35 & TR36
(SCALE 1:100)

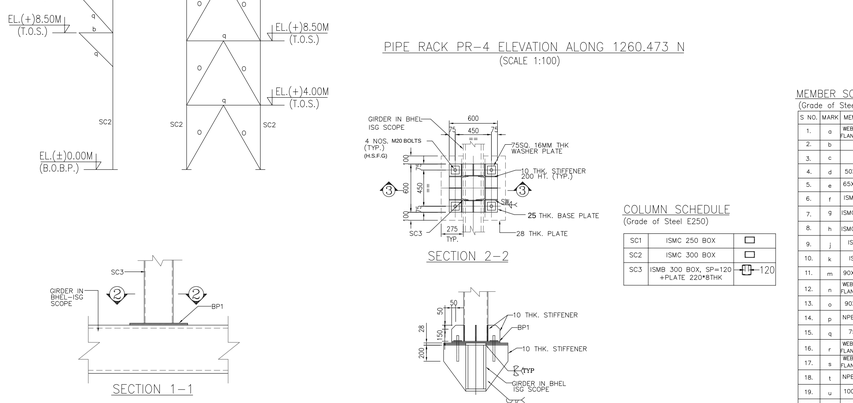

PIPE RACK PR-4 ELEVATION ALONG 1260.473 N
(SCALE 1:100)

SECTION 2–2

SECTION 1–1

SECTION 3–3

MEMBER SCHEDULE
(Grade of Steel E250)

S NO.	MARK	MEMBERS SIZE	
1.	a	WEB–1X210X16THK, FLANGE–2X160X20THK	Web Flange
2.	b	ISMB 250	
3.	c	ISMC 250	
4.	d	50X50X6	
5.	e	65X65X8	
6.	f	ISMC 75	
7.	g	ISMC 250	
8.	h	ISMC 300	
9.	j	ISMC 400	
10.	k	ISMC 75	
11.	m	90X90X10	
12.	n	WEB–1X226X12THK, FLANGE–2X160X12THK	Web Flange
13.	o	90X90X8	
14.	p	NPB 300X150X42.2	
15.	q	75X75X8	
16.	r	WEB–1X206X16THK, FLANGE–2X160X25THK	Web Flange
17.	s	WEB–1X216X12THK, FLANGE–2X160X16THK	Web Flange
18.	t	NPB 400X180X57.4	
19.	u	100X100X10	
20.	v	130X130X10	
21.	w	110X110X10	

COLUMN SCHEDULE
(Grade of Steel E250)

SC1	ISMC 250 BOX	
SC2	ISMC 300 BOX	
SC3	ISMB 300 BOX, SP=120 +PLATE 220*8THK	120

SPECIAL NOTE

DRAWINGS / DOCUMENTS ARE BEING SUBMITTED FOR INFORMATION.
BHEL HEREBY CONFIRMS FULL COMPLIANCE TO ALL THE SPECIFIED REQUIREMENTS OF THE CONTRACT SPECIFICATION, WITHOUT ANY DEVIATION, WHATSOEVER, IN CASE DURING THE TENURE OF THE CONTRACT, IT IS OBSERVED/FOUND THAT THE DATA/ INFORMATION IN THE RELEASED DRAWING/DOCUMENT IS NOT MEETING THE CONTRACT SPECIFICATION, BHEL/ITD VENDOR(S) WILL MODIFY/ RECTIFY/REPLACE THE SAME TO MEET THE SPECIFICATION WITHOUT ANY COMMERCIAL IMPLICATION OR ANY TIME EXTENSION TO PVUNL/NTPC IN THIS REGARD.

BHEL-PROJECT ENGINEERING MANAGEMENT(CIVIL)	
THIS DRAWING MARKED (✓) IS RELEASED FOR	
☐ COMMENTS/APPROVAL	☐ FABRICATION
☐ PLANNING	☐ INFORMATION
☑ CONSTRUCTION	
STAMP ALL PREVIOUS REVISION AS SUPERSEDED	
ISSUED BY	
NAME	ABHAY KUMAR
SIGNATURE	For
DATE	07/12/2020

NTPC. DRAWING NO. – 9585-001-315-PVC-C– 1469

CUSTOMER: NTPC LIMITED

3x800MW PATRATU SUPER THERMAL POWER PROJECT

JOB NO. 434
STATUS
DISTRIBUTION

BHARAT HEAVY ELECTRICALS LTD
POWER SECTOR
PROJECT ENGINEERING MANAGEMENT
NOIDA

COPY RIGHT AND CONFIDENTIAL
The information on this document is the property of BHARAT HEAVY ELECTRICALS LIMITED It must not be used directly or indirectly in any way detrimental to the interest of the company.

REV	DATE	ALTD	CHD	APPD
01	04.12.20	SAVITA	SG	AK

NO CHANGE.

DEPT CODE		NAME	SIGN	DATE
C	DRN	SAVITA	–SD–	27/11/2020
	CK'SN	SONAM	–SD–	27/11/2020
	CHD	ABHAY	–SD–	27/11/2020
	APPD	AKS	–SD–	27/11/2020

TITLE: PIPE RACK PR–4/ BOP AREA
STRUCTURAL LAYOUT & DETAILS

DEPT. | SCALE 1:100 | DRAWING NO. PE-DG-434-675- C020
SIGN | SHEET 2 OF 2 | REV. R2

SIZE–A1