COPYRIGHT AND CONFIDENTIAL
The information on this document is the property of **BHARAT HEAVY ELECTRICALS LIMITED**
It must not be used directly or indirectly in any way detrimental to the interest of the company

SPECIFICATION FOR COLD ROLLED NON- GRAIN ORIENTED (CRNO) ELECTRICAL STEEL SHEET / STRIP FOR MANUFACTURE OF 3-PHASE TRACTION MOTOR TYPE 6FRA 6068 & 6FXA7059

1.0 SCOPE:

This specification governs the quality requirements of insulated (double side) unpigmented type cold rolled, non-grain oriented magnetic steel sheet or coil in finally annealed condition in 0.50 mm thickness.

2.0 APPLICATION:

Laminations of Electrical Machines.

3.0 RAW MATERIAL :

3.1 The material should be Insulated (double side) unpigmented type Cold Rolled Non-Grain Oriented, Finally Annealed steel sheet of either of the following Grades.

i) Grade V 530-50A to DIN 46400 Pt-I with C4/C6 coating (with minimum average 4 microns coating thickness on each side, Total 8 micros) (German origin)

ii) Gr. M530-50A to EN-10106 with C4/C6 Coating (with minimum average 4 microns coating thickness on each side, Total 8 microns (European origin).

iii) Gr. M530-50A with C4/C6 Coating (with minimum average 4 microns coating thickness on each side, Total 8 microns) to IEC: 60404-8-4.

iv) M/s Thyssen Krupp Electrical Steel India Pvt. Ltd Grade 50C 530/C6A of C3Y type (with minimum average of 4 microns coating thickness on each side, Total 8 microns) to IS:648 & IS 649.

v) SAIL material Grade 50C 530 to IS: 648 with C3 coating with special imported varnish of M/s REMBRANDTIN / Austria Brand- REMISOL EB-5001 with minimum average of 4 microns coating thickness on each side (total 8 microns). This core plate varnish C6 (C3 Pigmented) shall be water reduceable, pigmented, Chromium free. Thermally resistant Phenolic Resins.

COPYRIGHT AND CONFIDENTIAL
The information on this document is the property of BHARAT HEAVY ELECTRICALS LIMITED
It must not be used directly or indirectly in any way detrimental to the interest of the company

4.0 DIMENSIONS AND TOLERANCES:

4.1 Sizes:

Magnetic steel sheet shall be supplied to the dimensions specified on BHEL order.

4.2 Tolerances:

4.2.1 Thickness:

The permissible deviation in nominal thickness shall be ± 8%. The variation in thickness in a direction parallel to the direction of rolling shall not exceed ± 8% of the nominal thickness.

The variation in thickness in a direction perpendicular to the direction of rolling shall be ± 0.020 mm for a nominal thickness of 0.50mm. The measuring points should be at least 40 mm away from the edges of the sheets.

4.2.2 Width:

The tolerance for width of material supplied with trimmed edges shall be as follows:

Width (mm)		Tolerance (mm)	
Over	Upto & incld.	Plus	Minus
-	150	0.3	0
150	500	0.5	0
500	1250	1.5	0

4.2.3 Length:

When supplied in sheet form the tolerance on length shall be + 1%, but shall not exceed + 10mm, -0.

4.2.4 Straightness/Edge camber

The straightness tolerances for the longitudinal edge (edge camber) over a gauge length of 2000 mm shall not exceed 4 mm for width upto and including 150mm and 2mm for widths exceeding 150mm.

COPYRIGHT AND CONFIDENTIAL
The information on this document is the property of BHARAT HEAVY ELECTRICALS LIMITED
It must not be used directly or indirectly in any way detrimental to the interest of the company

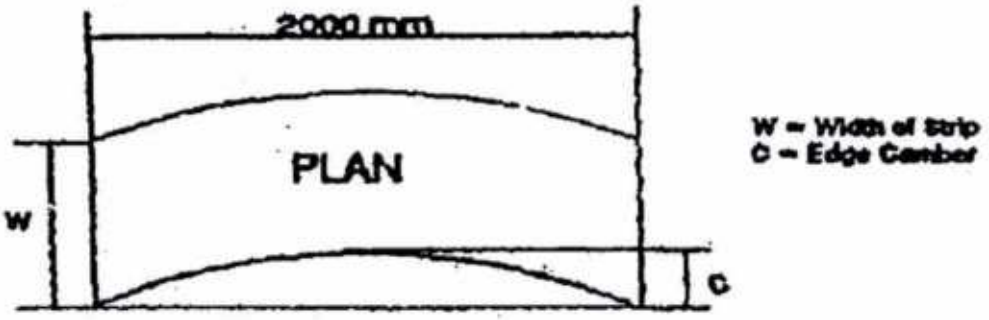

4.2.5 Edge Burr:

The height of edge burr shall not exceed 50 microns.

4.2.6 Bowing - Coils:

The material when unwound from a coil shall be placed flat on a level smooth surface (surface plate) such that it has a radius not less than 3000 mm. The specimen should be stood upright and free from constraint with one longitudinal edge on the surface of the plate. A straight edge with a length of 500 mm. when placed against the specimen and when measuring the greatest distance 'h' between the straight edge and the product should not be more than 10 mm as detailed below:

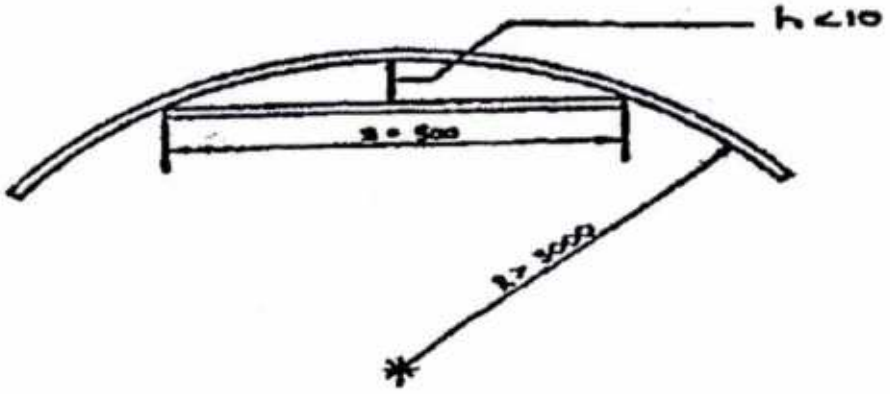

COPYRIGHT AND CONFIDENTIAL
The information on this document is the property of BHARAT HEAVY ELECTRICALS LIMITED
It must not be used directly or indirectly in any way detrimental to the interest of the company

4.2.7 Waviness/Flatness

The Waviness/Flatness shall not exceed 1.5% (i.e the ratio of the wave height to wave length).

5.0 FINISH:

The material shall have a smooth surface and shall be free from loose scale, buckle or dents, waviness and internal stresses.

6.0 TEST SAMPLES:

The test samples of the same heat/melt & thickness shall be selected from the consignment as follows:

Up to 30 tonnes	: 1 sample
Above 30 to 60 tonnes	: 2 samples
Above 60 tonnes	: 3 samples

The test samples shall be sufficient in size to provide the necessary test pieces.

7.0 ACCEPTANCE TEST:

7.1 Bend Test :

A test piece taken in rolling direction in the ordered thickness shall withstand a minimum of 10 bends, without fracture through 180 deg. Over a 5 mm radius jaws when tested to IS:649.

7.2 Stacking Factor:

The surface quality of the sheets when measured in terms of stacking factor as per IS649 shall not be less be 95%.

7.3 Total Specific Loss:

The specific total loss on aged specimens (A specimen which has been heated for 24 Hrs. at 225 deg. for 0.50 mm thickness) when tested as per IS:649 at frequency 50Hz and 1.5 Tesla should not exceed 5.30 W/Kg.

7.4 AC Magnetization:

When tested to IS:649, the AC magnetic field (H) in Ampere/meter (Peak) shall show the following minimum corresponding values of magnetic induction (B) in Tesla (Peak) for 0.50 mm thick material.

COPYRIGHT AND CONFIDENTIAL
The information on this document is the property of BHARAT HEAVY ELECTRICALS LIMITED
It must not be used directly or indirectly in any way detrimental to the interest of the company

AC magnetic Field Strength 'H' A/m Magnetic Induction, Min (B) Tesla (Peak)

2500 AT/M	1.54
5000 AT/M	1.64
10000 AT/M	1.74

7.5 Anisotropy of losses:
When tested to IS:649 the Anisotropy losses shall not exceed $\pm$ 10%.

7.6 Testing of insulation Coating:
The insulation coating when tested as detailed below shall show the following properties.

7.6.1 Selection of Test Samples for Insulation Coating :
The outermost and innermost turn of coil or the top-most and bottom most of a stack of sheets, shall be considered as wrapping and not representing the properties of the remaining material and hence shall not be considered for test specimen. In case of coils, the test specimens shall preferably be taken from the first external turn excluding the wrapping turn and in case of sheet, it shall be from the upper part of the stack. In special case, it can be taken from any other part also. The surface of the strip shall be free from contaminations and damages and shall be cut without deformation and as far as possible, without burrs. Any cleaning done shall not damage the insulation coating.

7.6.2 Coating Layer Thickness :
Both sides of the sheet shall be coated and shall have a thickness of 4 to 7 microns on each side at least 15 readings shall be taken on each side at equal intervals.

7.6.3 Surface Insulation Resistivity :
To be tested as per test procedure mentioned in relevant standards.

7.6.4 Type Tests*: In addition to tests specified at 7.1 to 7.6.3.

7.6.4.1 Adherence Test :
The surface coating shall be sufficiently adherent so that it does not get detached during insulation and shearing. In the reverse bending test with the bending radius of 5 mm the surface coating shall not be detached after bending through 90 deg.

7.6.4.2 Thermal Effect on coating :
Twelve specimen of the coated strip shall be clamped together under a pressure of 1 N/mm^2 approximately and fitted in the laboratory oven at a temperature specified in relevant Standards for a period specified in relevant Standards. After cooling to the room temperature, the surface insulation resistivity values of the middle ten specimens shall not be less than the minimum specified values mentioned in relevant Standards.

COPYRIGHT AND CONFIDENTIAL
The information on this document is the property of BHARAT HEAVY ELECTRICALS LIMITED
It must not be used directly or indirectly in any way detrimental to the interest of the company

7.6.4.3 Resistance to solvents Oils :

The specimen shall be kept in a container filled with boiling Trichloroethylene or xyline for 5 minutes. After removal and cooling to the room temperature, the coating shall not get soft enough so that it can be wiped off.

***Note :**

'Type tests', shall be carried out when, 'Type Approval' to a supplier is given and repeated once in Five years for the approved supplier.

8.0 TEST CERTIFICATES:

Three copies of test certificates shall be supplied, unless otherwise specified on order. In addition, the supplier shall ensure to enclose one copy of the test certificate along with their dispatch documents to facilitate quick clearance of the material.

The test certificate shall bear the following information:

TM10472 Rev No, BHEL Order No, Supplier's Name/Grade/Identification No., Size & Weight, Melt No., Packet/ Bundle No. Test results of Dimensions & Tolerances and Properties as per the concerned National standards & Insulation coating, as above.

9.0 SURFACE QUALITY OF STEEL SHEETS USED :

9.1 The surface of the Steel sheets used shall be smooth and bright as further treatment and processing must not result in any burrs or uneven spots of thickness more than 0.02 mm.

9.2 The sheets must be easy to cut without bending and should not result in premature wear on the cutting tools.

10.0 SURFACE COATING (INSULATION) :

10.1 Thickness of the surface coating on both sides shall be maintained at 4 µm (minimum) total 8 microns to be measured as per IS:649 Surface coating must have adhesive properties to withstand cutting and bending operations surface coating should be able to withstand a minimum of 10 bends of 90^0 with a bending radius of 5 mm without any damages in the surface coating. If this trial fails the Stampings has to undergo a factory cutting test.

COPYRIGHT AND CONFIDENTIAL
The information on this document is the property of BHARAT HEAVY ELECTRICALS LIMITED
It must not be used directly or indirectly in any way detrimental to the interest of the company

11.0 PACKING AND MARKING:

11.1 Material Supplied in Straight Length:

Magnetic steel sheets shall be supplied in bundles. The packing shall be seaworthy and shall protect the material from damage in transit. A typical packing which would be suitable is shown below.

Each sheet shall be marked with supplier's grade/references.

These markings shall be along the rolling direction.

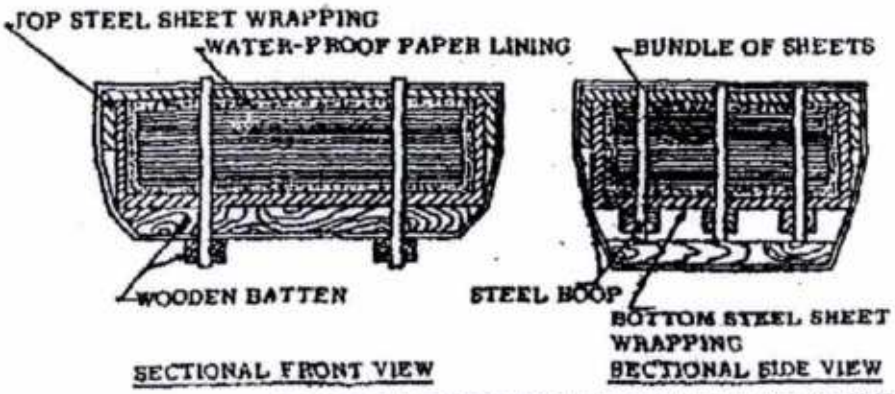

DETAILS OF PACKING FOR MAGNETIC STEEL SHEET

Note:

a) Water proof paper lining shall be preferably Volatile Corrosion Inhibitor (V.C.I.) Coated Paper with an additional polythene (100 micron) enveloped.

b) Approximate weight of each bundle shall be 2 to 3 metric tonnes. Bundle weighing 2 Metric tonnes is however preferred.

c) The packing should ensure that there is no seepage of moisture and the sheets reach BHEL on completely rust free condition. It shall be strong enough to withstand handling at the docks, at sea and on the road.

11.2 Material Supplied In Continuous Coil:

The nominal weight of each coil shall be 1800-2000kg.

The nominal internal diameter of coil shall be 508 mm.

Packing shall be sea-worthy and shall protect the coils from damage and rusting during transit. The supplier's grade/reference shall be marked at every one meter intervals throughout the coil length.

COPYRIGHT AND CONFIDENTIAL
The information on this document is the property of BHARAT HEAVY ELECTRICALS LIMITED
It must not be used directly or indirectly in any way detrimental to the interest of the company

Coils shall be vertically packed according to the instructions and drawing given below:

a) An annular protection board shall be placed at either end of the coil.

b) The coil shall then be wrapped with waterproof anti-rust proof paper by lapping axially all around the circumference.

c) The coil shall then be covered by polyethylene sheet or anti-rust waterproof paper and the ends sealed properly.

d) A galvanized sheet shall be wrapped on the outside of the coil and the top and bottom of the coils. Care shall be taken to ensure that the ends of the top and bottom of the coils extend sufficiently over the inside diameter of the coil.

e) A galvanized sheet shall be wrapped on the inside of the coil. Care shall be taken that it overlaps sufficiently over the ends of the sheet mentioned in (d) above.

f) Steel ring made from thick angle sheets shall be placed on the rim of the inner diameter at both ends of the coil. The rings shall be held at either ends at four points by steel bands.

g) The coil should then be mounted on wooden skids held together by steel bands. Wooden skids must have cutouts to house the steel bands for tight fit and to avoid slippage.

h) The packing shall ensure that there is no seepage of moisture and the coils reach BHEL in completely rust free condition. It shall be strong enough to withstand handling at the docks, at sea and on the road.

i) Coils shall be sufficiently tight-wound to prevent collapse to an extent that would preclude their being mounted on a mandrel appropriate to the ordered internal diameter.

j) Each package should indicate the, Sling Position, for lifting without damage. It is preferable to fix a suitable size of, 'Sheet Steel Angle', at the position where the Sling Rope is to be fitted to avoid slippage/damage/breakage of the wooden skid at four places.

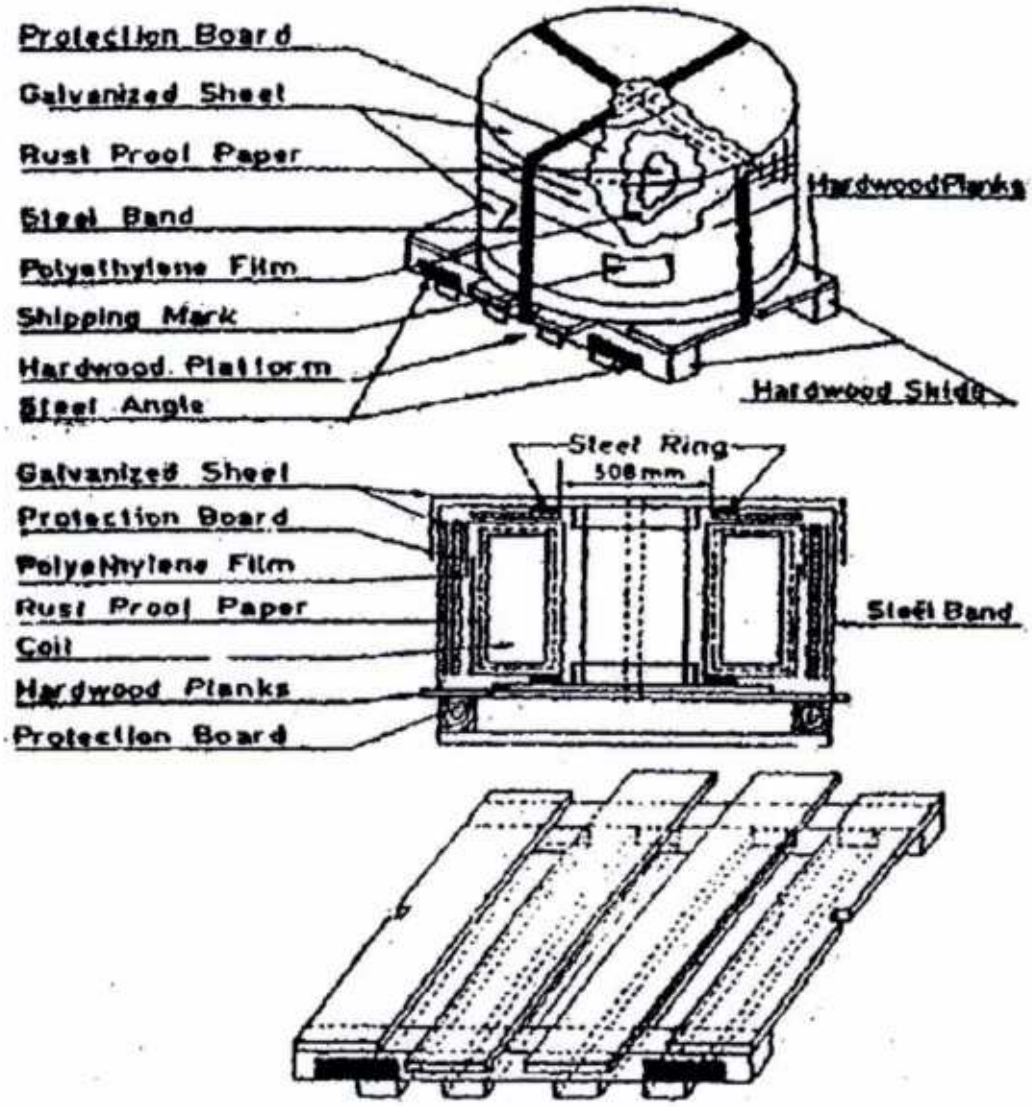

COPYRIGHT AND CONFIDENTIAL
The information on this document is the property of BHARAT HEAVY ELECTRICALS LIMITED
It must not be used directly or indirectly in any way detrimental to the interest of the company

COPYRIGHT AND CONFIDENTIAL
The information on this document is the property of BHARAT HEAVY ELECTRICALS LIMITED
It must not be used directly or indirectly in any way detrimental to the interest of the company

11.3 Marking:

A metal label/tag shall be securely attached with each bundle outside its wrapping and shall be legibly marked with the following information.

TM10472 Rev No, BHEL Order No, Supplier's Name/Grade/Identification No., Size & Weight, Melt No., Packet/Bundle No.

12.0 REFERRED STANDARDS (Latest Publications Including Amendments):

1) AA 0851711	2) AA 27541	3) IS: 648	4) IS:649
5) DIN EN 10106	5) DIN 50462	7) AISI, C-6	8) AA10917
9) 4TMS.096.053			

GENERAL INFORMATION FOR CALCUALTION
(NOT MANDATORY/TYPICAL VALUES)

Density : 7.7 kg/dm3

Magnetic induction (B) at 30,000 A/m (Peak) A/C — Magnetic field Strength (H) (Peak)

1.97 Tesla, min - 0.5mm, thick

Total specific loss at 1.0 Tesla : 2.30 watts/kg, max for 0.50mm

Mechanical Properties (Typical):

Tensile strength : 430 N/mm²
Yield strength : 290 N/mm²
Elongation on
(5.65√So G.L . : 30%

	CORPORATE PURCHASING SPECIFICATION	AA 109 01
		Rev. No. 06
		PAGE : 1 OF 9

COLD ROLLED NON-GRAIN ORIENTED SHEET STEEL - Gr : 600

1.0 GENERAL:

This specification governs the quality requirements of Un-Insulated & insulated (double side), unpigmented type, cold rolled, non-grain oriented magnetic steel sheet or coil in finally annealed condition in 0.50 mm thick.

2.0 APPLICATION:

Laminations of Electrical Machines.

3.0 CONDITION OF DELIVERY:

3.1 Cold Rolled, Finally Annealed.

3.2 The material shall be supplied in straight lengths (sheet form) or in coils, to the ordered thickness as specified in BHEL order

3.3 Magnetic steel sheets or coils shall be supplied with or without insulation coating, as detailed below and as called for on BHEL order.

a) 0.50 mm Thick - Insulated:*

Double side insulated (unpigmented type) with 3 to 6 micron thickness coating on each side. The Insulation coating shall comply with clause 3.4 & 8.6 of this specification

b) 0.50 mm / Thick - Uninsulated: *

Un-insulated, protected on both sides by rust preventive coating of thickness 2±1 microns.

*Note:

(i) The supplier shall furnish the details of such coatings alongwith the quotation

(ii) The surface finish of the insulation coating shall be such as to allow subsequent uniform coating without any problem.

3.4 **Type Of Insulation Coating:**

The insulation coating used for the insulated steel sheets referred in clause 3.3 (a) above shall be an uniformly applied, tightly adherent, phenolic based insulation coating on both sides, complying to AISI C3 quality of unpigmented type (Organic enamel/varnish coating) and shall meet the requirements detailed in Clause 8.6.

Revisions : Ref. Cl.23.7.62 of MOM			APPROVED : Interplant Material Rationalisation Committee-MRC (S&GPS)		
Rev. No. 06	Amd.No.	Reaffirmed	Prepared	Issued	Dt. of 1 st Issue
Dt. : 15-11-99	Dt :	Year :	BHOPAL	Corp. R&D	AUG. '75

COPYRIGHT AND CONFIDENTIAL
The information on this document is the property of BHARAT HEAVY ELECTRICALS LIMITED
It must not be used directly or indirectly in any way detrimental to the interest of the company.

4.0 COMPLIANCE WITH NATIONAL STANDARDS:

4.1 Material shall comply with the requirements of IS:648-1994, (Reaffirmed) Gr:50C600.

4.2 Material offered to DIN EN 101 06 -1996; Gr : M 600-50A is also acceptable.

5.0 DIMENSIONS AND TOLERANCES:

5.1 Sizes:

Magnetic steel sheet shall be supplied to the dimensions and coating specified on BHEL order.

5.2 Tolerances:

5.2.1 Thickness:

The permissible deviation in nominal thickness shall be ± 8% The variation in thickness in a direction parallel to the direction of rolling shall not exceed ± 8% of the nominal thickness.

The variation in thickness in a direction perpendicular to the direction of rolling shall be ± 0.020 mm. The measuring points should be at least 40 mm away from the edges of the sheets.

5.2.2 Width:

The tolerance for width of material supplied with trimmed edges shall be as follows:

Width, mm		Tolerance, mm	
Over	Upto & incld.	Plus	Minus
-	150	0.3	0
150	500	0.5	0
500	1250	1.5	0

5.2.3 Length:

When supplied in sheet form the tolerance on length shall be + 1%, but shall not exceed + 10 mm, -0.

5.2.4 Straightness/Edge Camber:

The straightness tolerances for the longitudinal edge (edge camber) over a gauge length of 2000 mm shall not exceed 4 mm for width upto and including 150 mm and 2 mm for widths exceeding 150 mm.

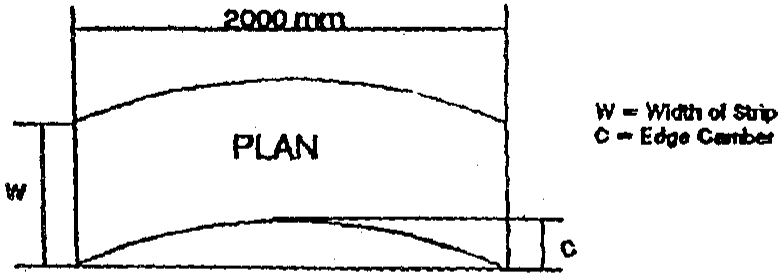

5.2.5 Edge Burr:

The height of edge burr shall not exceed 50 microns.

5.2.6 Bowing - Coils:

The material when unwound from a coil shall be placed flat on a level smooth surface (surface plate) such that it has a radius not less than 3000 mm. The specimen shall be stood upright and free from constraint with one longitudinal edge on the surface of the plate. A straight edge with a length of 500 mm, when placed against the specimen and when measuring the greatest distance 'h' between the straight edge and the product should not be more than 10 mm as detailed below:

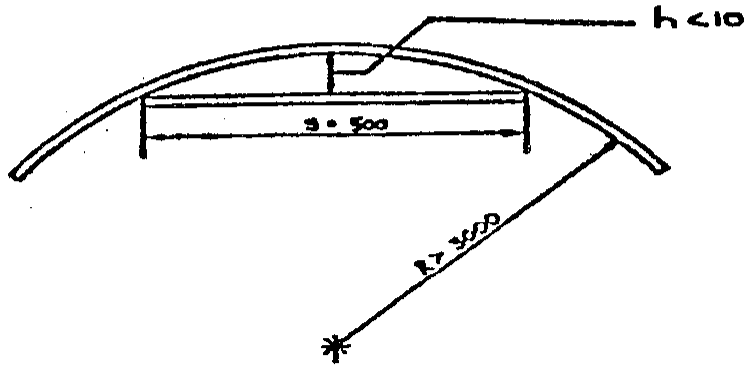

5.2.7 Waviness/Flatness

The Waviness/Flatness shall not exceed 1.5% (i e the relation of the wave height to wave length).

6.0 FINISH:

The material shall have a smooth surface and shall be free from loose scale, buckle or dents, waviness and internal stresses.

7.0 TEST SAMPLES:

The test samples of the same heat/melt & thickness shall be selected from the consignment as follows:

Upto 30 tonnes	:	1 sample
Above 30 to 60 tonnes	:	2 samples
Above 60 tonnes	:	3 samples

The test samples shall be of sufficient size to provide the necessary test pieces.

8.0 PROPERTIES (AS RECEIVED):

8.1 Bend Test:

A test piece of 30 mm width x 60 mm long taken in rolling direction in the ordered thickness shall withstand a minimum of 10 bends without fracture, through 180 deg. over a 5 mm radius jaws when tested to IS : 649/DIN EN 10106

8.2 Stacking Factor:

The surface quality of the sheets when measured in terms of stacking factor as per IS:649 (on a minimum of 16 samples under a pressure of 35 N/cm^2) shall be as follows:

0.50mm thick-Double side coating : 95.5%, minimum

0.50mm thick-Uninsulated : 97.0 %, minimum.

8.3 Total Specific Loss:

The specific total loss on aged specimens (a specimen which has been heated for 24 hours at 225 ± 3 deg.C) shall be as follows, when tested as per IS:649/DIN 50462 at a frequency of 50 Hz for the specified flux density.

6.00 Watts/kg, maximum - At 1.5 Tesla

8.4 AC Magnetisation:

When tested to IS:649/DIN 50462, the AC magnetic field (H) in Ampere/metre (Peak), shall show the following minimum corresponding values of magnetic induction (B) in Tesla (Peak).

AC Magnetic Field Strength 'H' A/m (Peak)	Magnetic Induction Min.(B) Tesla (Peak)
2500	1.55
5000	1.65
10000	1.75

8.5 Anisotrophy of Losses:

When tested to IS:649/DIN EN 10106 as detailed below, the Anisotrophy losses shall not exceed ± 10%

To determine the loss ANISOTROPHY the specific total losses shall be measured separately on specimens taken parallel and perpendicular to the rolling direction. The loss Anisotrophy, in percent, is found from the following expression:

$$\frac{Pq - Pl}{Pq + Pl} \times 100 \text{ where,}$$

Pq denotes specific total losses perpendicular to the rolling direction.

Pl denotes the specific total losses parallel to the rolling direction.

8.6 Testing Of Insulation Coating:

The insulation coating when tested as detailed below shall show the following properties.

8.6.1 Selection Of Test Samples For Insulation Coating:

The outermost and innermost turn of coil or the top-most and bottom-most of a stack of sheets shall be considered as wrapping and not representing the properties of the remaining material and hence shall not be considered for test specimen.

In case of coils, the test specimens shall preferably be taken from the first external turn excluding the wrapping turn and in the case of sheet, it shall be from the upper part of the stack. In special case, it can be taken from any other part also.

The test specimen shall extend over the entire sheet width and can be about 350 ± 2 mm long. In case of sheet width, below 400 mm, the specimen shall be 500 ± 2mm long.

The surface of the strip shall be free from contaminations and damages and shall be cut without deformation and as far as possible, without burrs. Any cleaning done shall not damage the insulation coating.

8.6.2 Coating Layer Thickness:

Both sides of the sheet shall be coated and shall have a thickness of 3 to 6 microns on each side.

At least 15 readings shall be taken on each side at equal internals. 95% of the readings shall lie between the above specified value. The thickness of any pre-coating shall not be accounted for.

Thickness shall be measured using a thickness gauge conforming to IS : 6012.

8.6.3 Surface Insulation Resistivity:

When tested as per ASTM, A 717 - Franklin's Method, at a pressure of 2 N/mm², at room temperature the minimum average of 10 non-overlapping resistance measurements (5 on each side) shall be 30 Ohm-cm² with a minimum allowable individual value of 10 Ohm-cm².

8.6.4 Type Tests*:

8.6.4.1 Adherence Test:

The surface coating shall be sufficiently adherent so that it does not get detached during insulation and shearing. In the reverse bending test with a bending radius of 5 mm, the surface coating shall not be detached after bending through 90 deg.

8.6.4.2 Thermal Effect On Coating:

Twelve specimens of the coated strip shall be clamped together under a pressure of 1 N/mm^2 approximately and heated in a laboratory oven at a temperature of 150 ± 3^0C for a period of seven days. After cooling to the room temperature, the surface insulation resistivity values of the middle ten specimens shall not be less than the minimum specified values mentioned in Cl.8 6.3.

8.6.4.3 Resistance To Solvents, Oils:

The specimens shall be kept in a container filled with any of the following solvents/oil and boiled for 5 minutes. After removal and cooling to the room temperature, the coating shall not get soft enough so that it can be wiped off.

The insulation film shall be resistant to conventional organic solvents like trichloroethylene, methylated spirit, acetone, benzene, etc. and oil. In special cases and when specified on BHEL order, the insulating film shall be resistant to ammonia also.

***Note:**

'Type tests', shall be carried out when, 'Type Approval', to a supplier is given & repeated once in two years for the approved supplier.

9.0 TEST CERTIFICATES:

Three copies of Test Certificate shall be supplied unless otherwise agreed to. The supplier shall ensure to enclose one copy of the Test Certificate alongwith the despatch documents to facilitate quick clearance of the material.

The test certificate shall bear the following information:

AA 109 01 : Rev.06/IS:648:Gr:50C600/DIN EN 10106 Gr: M600-50A, BHEL Order No,Suppliers Name & Grade, Identification No, Melt No, Size & Weight, Packet/Bundle No, Test Results of Dimensions & Properties as per the concerned National Standard & Insulation Coating, as above.

10.0 PACKING AND MARKING:

10.1 Material Supplied In Straight Length:

Magnetic steel sheets shall be supplied in bundles. The packing shall be sea-worthy and shall protect the material from damage in transit. A typical packing which would be suitable is shown below.

Each sheet shall be marked with supplier's grade/references.

These markings shall be along the rolling direction.

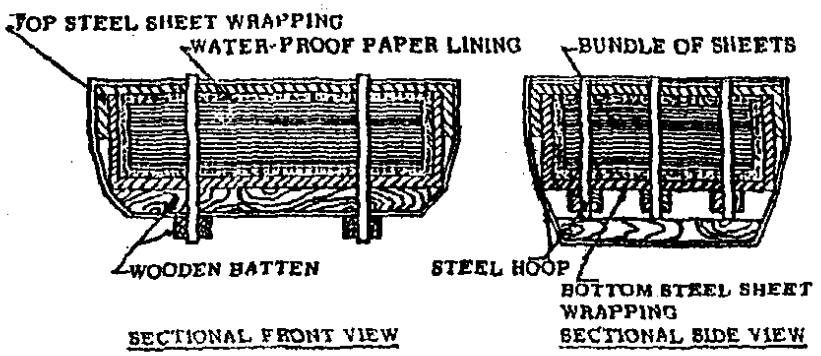

DETAILS OF PACKING FOR MAGNETIC STEEL SHEET

Note:

a) Water proof paper lining shall be preferably Volatile Corrosion Inhibitor (V.C.I.) Coated Paper with an additional polythene (100 micron) enveloped.

b) Approximate weight of each bundle shall be 2 to 3 metric tonnes. Bundle weighing 2 metric tonnes is however preferred.

c) The packing shall ensure that there is no seepage of moisture and the sheets reach BHEL in completely rust free condition. It shall be strong enough to withstand handling at the docks, at sea and on the road.

10.2 Material Supplied In Continuous Coil:

The nominal weight of each coil shall be 1800 - 2000 kg.

The nominal internal diameter of coil shall be 508 mm.

Packing shall be sea-worthy and shall protect the coils from damage and rusting during transit.

The supplier's grade/reference shall be marked at every one metre intervals throughout the coil length. Coils shall be vertically packed according to the instructions and drawing given below.

a) An annular protection board shall be placed at either end of the coil.

b) The coil shall then be wrapped with waterproof anti-rust proof paper by lapping axially all around the circumference.

c) The coil shall then be covered by polythylene sheet or anti-rust waterproof paper and the ends sealed properly.

d) A galvanised sheet shall be wrapped on the outside of the coil and the top and bottom of the coils. Care shall be taken to ensure that the ends of the top and bottom of the coils extend sufficiently over the inside diameter of the coil.

e) A galvanised sheet shall be wrapped on the inside of the coil. Care shall be taken that it overlaps sufficiently over the ends of the sheet mentioned in (d) above.

f) Steel ring made from thick angle sheets shall be placed on the rim of the inner diameter at both ends of the coil. The rings shall be held at either ends at four points by steel bands.

g) The coil shall then be mounted on wooden skids held together by steel bands. Wooden skids must have cutouts to house the steel bands for tight fit and to avoid slippage.

h) The packing shall ensure that there is no seepage of moisture and the coils reach BHEL in completely rust free condition. It shall be strong enough to withstand handling at the docks, at sea and on the road.

i) Coils shall be sufficiently tight-wound to prevent collapse to an extent that would preclude their being mounted on a mandrel appropriate to the ordered internal diameter.

j) Each package should indicate the . Sling Position, for lifting without damage. It is preferable to fix a suitable size of, 'Sheet Steel Angle', at the position where the Sling Rope is to be fitted to avoid slippage/damage/breakage of the wooden skid at four places..

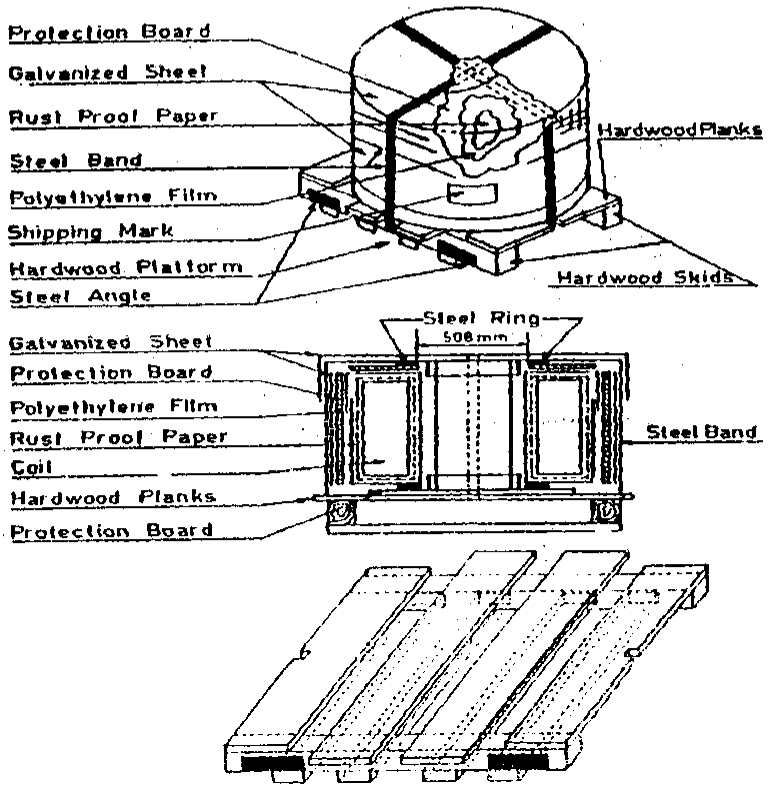

10.3 Marking:

A metal label shall be securely attached to each bundle and shall be marked with the following:

AA 10901, BHEL Order No, Supplier's Name & Grade, Identification No, Size & Weight, Melt No, Packet/Bundle No.

11.0 REFERRED STANDARDS (Latest Publications Including Amendments) :

1. IS : 648	2. IS : 649	3. IS : 6012
4. DIN EN 10106	5. DIN 50462	6. ASTM A717

GENERAL INFORMATION FOR CALCULATION
(NOT TO FORM ACCEPTANCE CRITERION)

- Density		7.75 kg/dm³
- Magnetic Induction (B)	}	
at 30,000 A/m (Peak) AC	}	1.98 Tesla, Min.
Magnetic Field Strength (H) (Peak)	}	
- Total Specific Loss at 1.0 Tesla	}	2.60 Watts/kg, Max.

Mechanical Properties (Typical)

- Tensile strength	:	430 N/mm2
- Yield strength	:	290 N/mm2
- Elayation (5.65 √So GL)	:	30 %