FIRST ANGLE PROJECTION

(ALL DIMENSIONS ARE IN mm)

DWG. NO. 0 255 01 86601

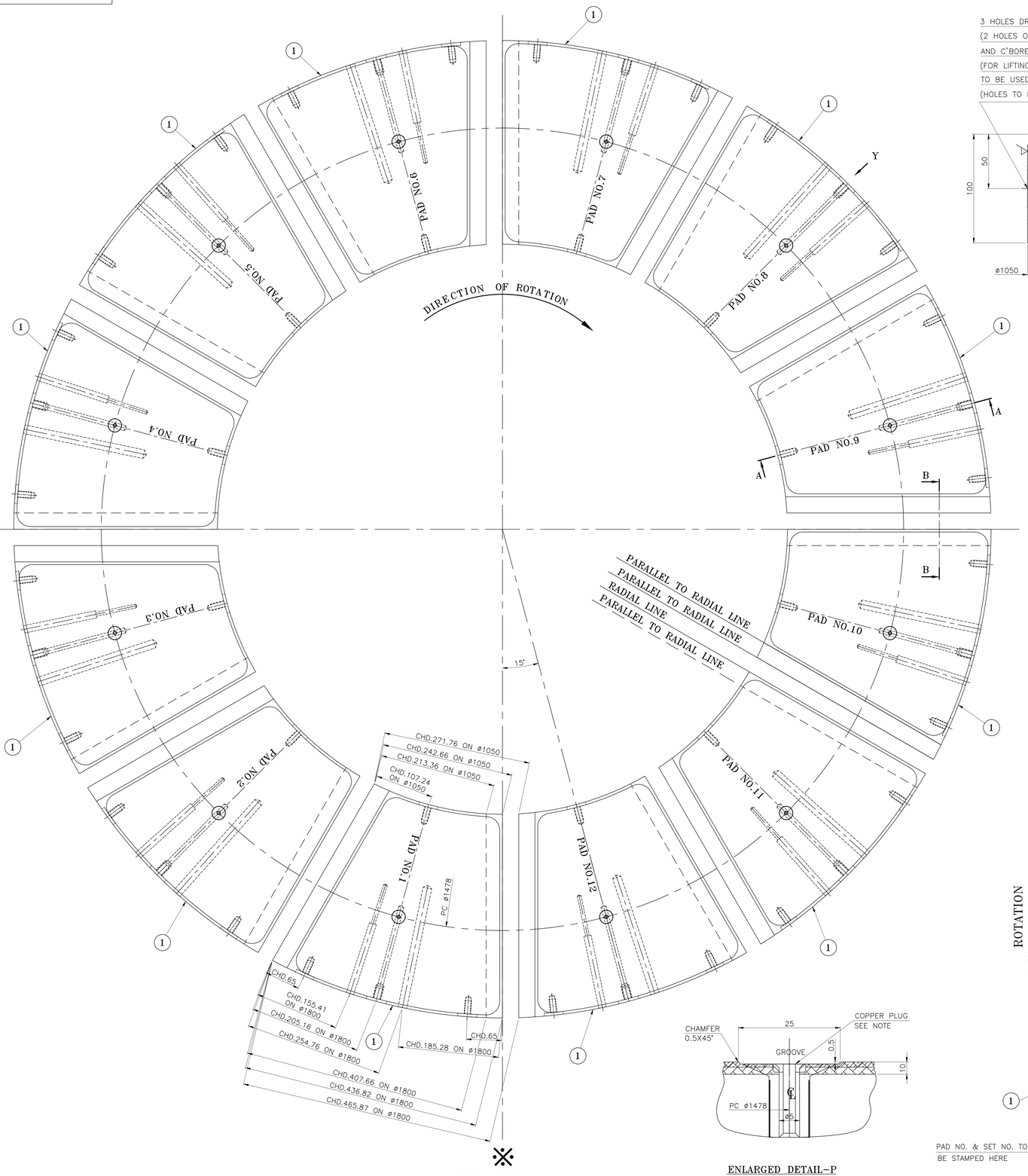

※ DOWN STREAM

▽ ALL OVER

SET OF THRUST BEARING PADS

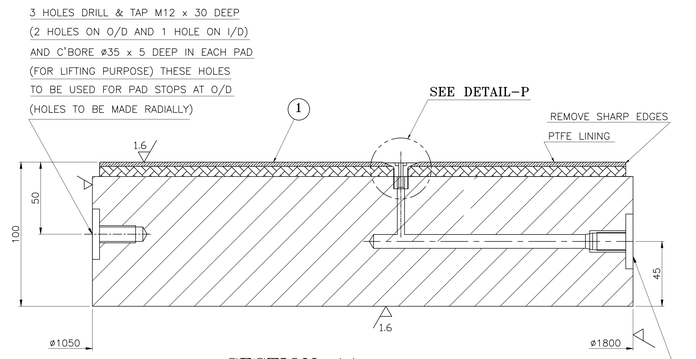

SECTION-AA

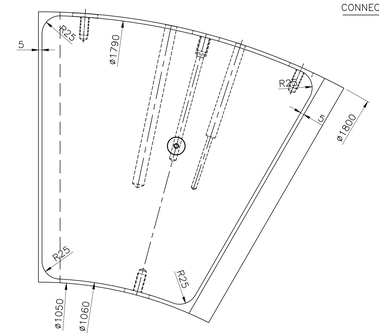

TOP VIEW OF PAD
SHOWING PTFE PROFILE

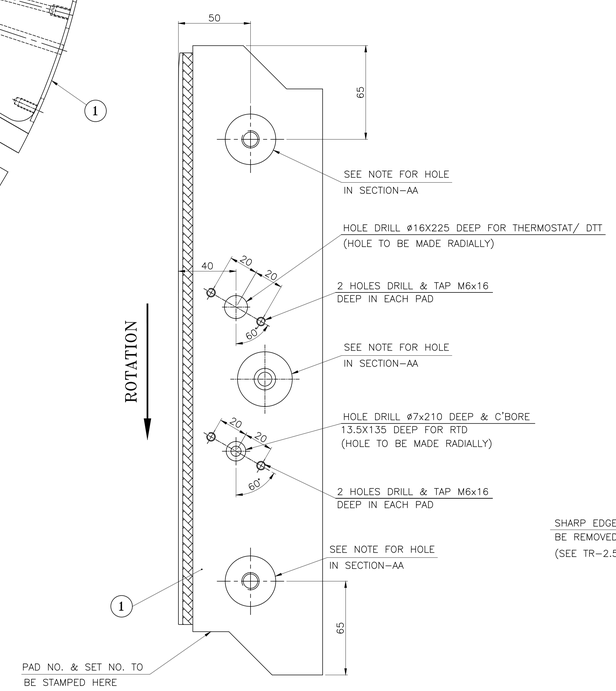

VIEW AS ARROW-Y
FOR RTD/DTT/ THERMOSTAT

ENLARGED DETAIL-P

DIRECTION OF ROTATION →

TECHNICAL REQUIREMENTS:-

1. BASE METAL :-

1.1 THE BASE MATERIAL OF PAD SHALL BE M.S. PLATE TO DIN. EN 10025, Gr:S 275 J2G3 OR M.S.PLATE TO AA10119 (IS:2062-GR:B-FE 410 WB) CAN BE USED. IT IS TO BE HEAT TREATED FOR HYDROGEN DIFFUSION.

1.2 FULL AREA OF PLATES TO BE ULTRASONICALLY TESTED FROM BOTH SURFACES AS PER CATEGORY 2 OF B.H.E.L. STANDARD AA0850118, 'ULTRASONIC TESTING, CLARIFICATION AND ACCEPTANCE STANDARDS FOR STEEL FORGINGS, BILLETS

1.3 THE SURFACE FINISH OF ALL MACHINED SURFACES SHOULD BE 3.2 MICRONS OR BETTER EXCEPT OTHERWISE STATED.

2. FINISHED PADS :-

2.1 FOR THRUST PADS :-

a) STEEL AND PTFE SURFACES TO BE FLAT WITHIN 0.01mm MEASURED BY USING BS 817 GR 'O' SURFACE PLATE AND THICKNESS VARIATION NOT TO EXCEED 0.02MM IN EACH PAD.

b) FOR INTERCHANGEABILITY, THICKNESS VARIATION FROM PAD TO PAD OF EACH SET SHOULD BE WITHIN 0.03mm.

2.2 TEST THE PAD MATERIAL & PTFE MATERIAL & ITS BONDING AS PER APPROVED QA PLAN.

2.3 STAMP SET NOS & PAD NOS. ON EACH PAD IN LOCATION INDICATED.

2.4 PACKING TO BE DONE IN ACCORDANCE WITH DRG. NO.32550101400 BY SUPPLIER.

2.5 SUITABLE GROOVES/PROVISION FOR PAD WEAR INDICATION FOR PTFE LINING SHALL BE PROVIDED BY SUPPLIER.

3. DIMENSIONAL REQUIREMENTS:-

3.1 THE CHORD DIMENSIONS OF THRUST PADS SHALL BE WITHIN $^{+0}_{-0.5}$ MM.

3.2 THE PITCHING OF VARIOUS HOLES SHALL BE WITHIN ±1 MM. EXCEPT OTHERWISE STATED.

3.3 ALL OTHER DIMENSIONS RELATED TO GEOMETRY AND SHAPE OF PAD SHALL BE WITHIN ±0.25 MM.

NOTE FOR SUPPLIER:-

1. COPPER PLUG DESIGN AND DETAIL TO BE FURNISHED BY SUPPLIER AT THE TIME OF APPROVAL.
2. PTFE SURFACES OF THE PADS MUST BE FREE FROM DIRT, DENTS, SCRATCH & HAIRLINE MARKS ETC.
3. SHARP EDGES OF PTFE TO BE REMOVED AS SHOWN IN THE DRAWING. CHAMFERING SHOULD NOT BE DONE FOR REMOVING SHARP EDGES.
4. THE METAL BASE SURFACES SHOULD BE PROPERLY CLEANED & SURFACE FINISH SHOULD BE AS PER DRAWING AND METAL SURFACES SHOULD BE FREE FROM DENTS MARKS, RUSTING AND BLACK COLOUR PATCH MARK ETC.
5. THE COPPER PLUG FITMENT SHOULD BE ADEQUATE IN THE PADS. THE BONDING EDGES OF COPPER PLUG SHOULD BE NOT HAVE ANY CAVITY, DEFECT ETC.
6. TOP EDGE OF COPPER PLUG SHOULD HAVE PROPER CHAMFER AS SHOWN IN THE DRG.
7. THERE SHOULD BE NO PROJECTION OF METAL WIRE AT BONDING EDGE I.E. BETWEEN PTFE AND METAL.

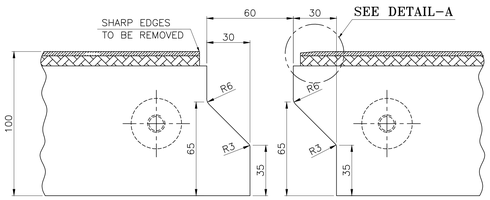

SECTION-BB

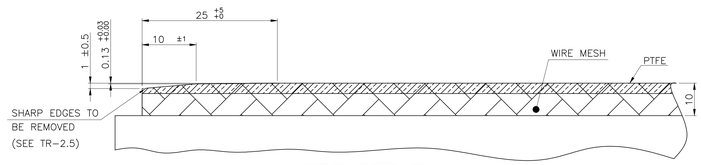

SEE DETAIL-A

VAR.00	REMARKS	VAR NO.	ITEM NO.	DESCRIPTION	STD.	DRAWING NO.	VAR.	MATL. CODE / MATL. SPCN.	UNIT	UNIT WT. / QTY.
			001	PAD SEGMENT					NA. NA.	92.0 / 012

28 CARD TYPE-3 28 CARD TYPE-2 28 CARD TYPE-1

ADDITIONAL INFORMATION
W.O. 3410B TO 11 P-231-55

STATUS OF DRAWING 'U'

DISTRIBUTION OF PRINTS
HGE-3 TEX-1
HGM-4 TGM-2

उत्पाद का प्रकार या ग्राहक/परियोजना का नाम
TYPE OF PRODUCT OR NAME OF CUSTOMER/PROJECT

HGS 803/144-24D
THDC/VISHNUGAD PIPALKOTI HEP

भारत हेवी इलेक्ट्रिकल्स लिमिटेड भोपाल
BHARAT HEAVY ELECTRICALS LTD. BHOPAL

	नाम/ NAME	हस्ताक्षर/ SIGN	दिनांक/DATE	ड्रा. की संख्या NO. OF NOS
तैयार/ DRN.	BP		09.12.15	00
जाँचा/ CHKD.	VG		09.12.15	
स्वीकृत/ APPD.	DXC/MGS		09.12.15	

विभाग DEPT. HGE	उत्पाद/ UNITS, DRG. GR.	उत्पादन SCALE NTS	आर. वी.एल. WEIGHT (KG) –	उत्पाद का प्रकार REF. TO ASSY. DRG. 1 255 01 86601
कोड CODE 403	3 2500001404			आइटम ITEM NO. 001

शीर्षक/ TITLE
SET OF
THRUST BEARING PADS

ड्रा./दर्शा. का नंबर DRAWING NO.
0 255 01 86601

ड्रा./REV 00

पृष्ठ सं./SHT. No. 01 पृष्ठों की संख्या/NO. OF SHT. 01

REV.	DATE	ALTERED / CHECKED / APPROVED

A0

THE INFORMATION ON THIS DOCUMENT IS THE PROPERTY OF BHARAT HEAVY ELECTRICALS LIMITED
IT MUST NOT BE USED DIRECTLY OR INDIRECTLY IN ANY WAY DETRIMENTAL TO THE INTEREST OF THE COMPANY

INVENTORY NO. | SGN. & DATE | REF. DRG. NO.