Enquiry No 4102100029 dt 28.10.2021
Procurement of Seamless Forged Tees (F92)

Dear Sir / Madam,

Sub: Procurement of Seamless Forged Tees (F92) as per BHEL Enquiry- 4102100029 dt 28.10.2021.

We are pleased to inform that Global open Tender Enquiry has been floated for the **"Procurement of Seamless Forged Tees (F92)"** as per BHEL Enquiry No 4102100029 dt 28.10.2021. Prospective suppliers are requested to submit their offer thru BHEL's E-Procurement portal (https://eprocurebhel.co.in/nicgep/app) in Two Parts basis (Part I- Techno-Commercial bid; Part II- Price bid) on or before **15:00 HRS IST** on **19.11.2021**. Part I bid will be opened on **16:30 HRS** on the tender due date**.**

All corrigenda, addenda, amendments, time extensions, clarifications etc (if any) will be hosted on BHEL's E-Procurement portal, BHEL's tender notification (http://www.bhel.com). Such corrigenda, addenda, amendments, time extensions, clarifications etc will not be published in newspapers or any other media. Bidders shall regularly visit the above websites to keep themselves updated.

The following are enclosed for information-

1.0 PQR, Techno commercial requirements
2.0 Technical Delivery Conditions
3.0 Quality Plan
4.0 Technical Deviation Format
5.0 Packing Procedure
6.0 Applicable items list
7.0 Annexure A- General Terms & Conditions
8.0 Make in India declaration format
9.0 Drawings
10.0 Non-disclosure agreement (NDA)
11.0 Approved Raw material supplier list

Bids on Two Part basis shall be submitted in line with the Terms & Conditions of the NIT. Care shall be given to submit the following documents along with Part I offer without fail-

- Technical deviation sheet (in case of any deviations)
- UDHYAM certificate and Make in India declaration in formats attached (in case purchase preference is applicable)

Any clarification on technical specifications can be obtained from BHEL before tender opening. Suppliers are welcome to have pre-bid meeting with BHEL Engineers for better understanding our requirements. Please note that as per BHEL's Policy, **BHEL cannot allow price impact post Part I opening for the requirement / scope of supply which is a part of specifications of our Enquiry**. Hence, please read specification / documents thoroughly and submit your offer as per specifications of Enquiry. In case of any query / un-clarity on any of the clause / requirement of specification, please get them clarified from BHEL before submission of offer. No deviation & request regarding un-clarity / contradictory conditions / ambiguity of specifications would be entertained after opening of Part I bid. Vendors are required to thoroughly understand the scope of supply and submit their quotation before the Enquiry due date indicated above.

Enquiry No 4102100029 dt 28.10.2021
Procurement of Seamless Forged Tees (F92)

In the event of any Technical or Commercial queries, the same may please be addressed to the following concerned before Part I opening-

- Sandeep, Sr. Engineer / Purchase- sandeepj@bhel.in, +91-9445159877, +91-044-28161315
- Shreelekha S Chandar, DM /Purchase -shreelekha@bhel.in, +91-044-28161385

In the event of any queries during submission of the tender thru BHEL's E-Procurement NIC portal, you may pls contact-

- NIC Customer Care- support-eproc@nic.in, 0120-4001002, 0120-4001005, 0120-6277787

General Note-

- BHEL reserves the right to increase or decrease the tendered quantity and split the tendered quantity. BHEL reserves the right to negotiate or re-float the tender opened if L1 price is not the lowest acceptable price to them inter-alia other reasons.
- One agent cannot represent two or more suppliers or quote on their behalf in a particular tender. If so found at any stage, BHEL Piping Centre is likely to cancel bids of such suppliers. Further, such Indian Agent is likely to be de-listed (Black listed for business from BHEL). Any agent representing the supplier shall upload agency agreement along with the part-I bid of the tender.
- In order to protect the commercial interests of BHEL, it becomes necessary to take action against suppliers / contractors by way of suspension of business dealings, who either fail to perform or are in default without any reasonable cause, cause loss of business / money / reputation, indulge in malpractices, cheating, bribery, fraud or any other misconduct or formation of cartels so as to influence the bidding process or influence the price etc. Suspension of Business Dealings could be in the form of "Hold" or "Banning" a supplier / contractor or a bidder or an applicant for registration as a registered supplier. For this purpose, the abridged version of guidelines hoisted at website http://www.bhel.com/vender_registration/vender.php (Suspension of business dealings with suppliers / contractors) is being followed across all BHEL units. Bidders shall keep themselves aware of these guidelines before submission of their quote.

For BHEL Piping Centre,

Sandeep
SE / Purchase
+91-044-28161315
+91-9445159877

Pre – Qualification Requirement (PQR) for F92 Tees for Patratu Project

Sl No	PQR description	Documents to be submitted	Bidder response (Submitted / Not submitted / NA)
1	Bidder shall be a regular manufacturer or authorized agent of manufacturer having experience in SA105/F92 forgings (Traders / distributors / dealers are not acceptable). Only forging vendors are permitted. Agents of foreign principals not to represent more than one firm.	Product Catalogue or ISO 9001:2015.	
2	i) Bidder must have valid ISO certification. Ii) IBR qualification (applicable only for indigenous bidders).	i) IBR certificate. Ii) Copy of valid ISO 9001:2015 certificate.	
3	**a)** Bidder shall have prior experience in successful manufacturing and supply of seamless items like Tee or Y Piece or Lateral of minimum single piece item weight of **1.0 kgs (For Sl. No. 1 to 3)** in F92 specification. **b)** Bidder shall have prior experience in successful manufacturing and supply of seamless items like Tee or Y Piece or Lateral of minimum single piece item weight of **1.0 MTs** (**For Sl. No. 4)** in F92 specification. Supply experience being furnished shall not be prior to 3 years from the date of the Enquiry. For indigenous Start-ups and MSE bidders alone, prior experience is relaxed to last 4 years from the date of Enquiry. Supply experience post Part I bid opening date will not be considered.	1. Copy of PO, full set of MTC's, invoice, packing list and LR / BL (if available) as per Annexure 1. 2. Indigenous bidders shall mandatorily submit IBR form III C / EN 3.2 certificate for the experience cited. 3. In case of foreign bidder, supporting MTC's to experience cited shall be witnessed / reviewed by any reputed Third Party Inspection agency like Lloyds, BV, TUV etc or by end customer. In lieu of the above, proof of atleast one export supply made (outside domestic market preferably Europe or USA or India) shall be furnished. In any case, self-certified MTC's will not be accepted.	
4	Availability of in-house facility for heat-treatment using a furnace to heat treat in the range of 1050 to 1080 deg C for Gr92 material.	Valid furnace calibration report.	
5	Firm should have made a turnover of atleast **<u>Rs. 35 lakhs</u>** for anyone of last 3 audited Financial Year (FY 2020-21, 2019-20 or 2018-19). In case of foreign bidder, financial turnover shall be an equivalent of Rs. 35 lakhs in their regional currency. For indigenous Startups and MSE bidders alone, financial turnover of Rs. 35 lakhs is relaxed to Rs. 18 lakhs. For foreign bidder, exchange rate as on the date of Part I opening will be considered for arriving equivalent turn over in INR.	1. Indigenous bidders shall submit audited Company Financial statement- Balance Sheet and P&L statement for the past 3 years (FY 2020-21, 2019-20, 2018-19) meeting financial turnover criteria. Bidder shall submit the latest audited balance sheet (FY 2020-21) also. 2. In case of foreign bidder, recent credit rating report issued by any reputed third party rating agencies like D&B / Creditreform will be accepted in place of the above.	

Pre – Qualification Requirement (PQR) for F92 Tees for Patratu Project

Sl No	PQR description	Documents to be submitted	Bidder response (Submitted / Not submitted / NA)
6	Indigenous bidders referred to BIFR or Firms having strictures / hold by any other Government agencies will not be considered.	Bidder's compliance.	
7	Bidder to submit all supporting documents in English language. If documents submitted by bidder are in a language other than English, a self-attested English translated document shall also be submitted.	Translated documents (if applicable).	

Bidder- Bidder / Principal / Collaborator / Agent / Mill. Details to be furnished by the bidder.
Bidder shall submit all relevant documentation for Sl Nos 1 to 7.

Note-

1. Bidders can quote depending on their manufacturing capability. Bids will be considered only for those Enq Sl Nos that qualify PQR.
2. Only the bids fulfilling PQR will be considered for further Techno-Commercial evaluation.
3. Bidders proposing to avail Startup and MSE relaxations shall submit applicable documentary proof along with Pre-Qualification bid. In case the required documents are not submitted by the bidder, no relaxation will be provided. Relaxations are subject to bidder meeting technical and quality criteria of the PQR.
    a. For Startups - Certificate of Recognition by Department of Industrial Policy & Promotion.
    b. For MSE - UDHYAM Certificate shall be submitted.
4. Notwithstanding anything stated above, BHEL reserves the right to assess the capabilities and capacity of the bidder to perform the contract in the overall interest of BHEL.
5. BHEL reserves the right to check the authenticity of the PQ details furnished. In any case if the submitted details are found to be falsified, such erring vendors will be dealt as per extant guidelines of BHEL's Suspension of Business Dealings.

Annexure 1 to PQR - Experience List Format

Details of experience in supply of Seamless Forged Y Piece/Tees/lateral in F92 grade- For F92 items

Sl No	Product supplied (Tee / Y Piece / Lateral)	Specification	Purchase Order No	Purchase Order date	Size of item supplied (OD & Thk)	Weight of item supplied	Year of supply	Customer name	Customer contact email and no (if available)	List of supporting documents to be submitted (PO copy, MTC's, Invoice, Packing list, BL / LR)
1										

Enq- 4102100029 dt. 28.10.2021 - Seamless Forged Tees - F92
Techno-Commercial Terms

Sl No	BHEL requirement	Bidder response
1	Quotation no	
2	Quotation date	
3	Currency of quote (Foreign bidders shall quote only in foreign currency)	
4	Applicable GST % shall be indicated (Foreign bidders shall indicate "Not applicable")	
5	**Technical requirements-** 1) TDG 104 Rev 10 is applicable. 2) Quality Plan 7381QPC 20 is applicable for F92 Tees. 3) Raw material shall be sourced from approved suppliers as per QCP - 18 Rev 03 dt 19 07 2019 (or latest revision) . 4) Packing procedure shall be as per PC-PKG-01. 5) EP shall be as per DRG 3-80-300-19825/04 if not indicated explicitly in the drawing.	
6	**Flattening test & S4- etching test shall be done as per NTPC Patratu spec if Pipe SA335 P92 is used as raw material for Gr92 fittings. Otherwise, S3 and S4 will not be applicable. Bidder to confirm if applicable.**	
7	**Technical deviations (if any)-** Bidders may note that except for the deviations listed in the 'Enquiry Deviation Format', the bid shall be deemed to comply with all the requirement in the bidding documents and the bidders shall be required to comply with all terms, conditions and specifications of the bidding documents irrespective of any mention to the contrary, anywhere else in the bid. Deviations taken by vendors (if any) are subject to BHEL approval. If deviation format is not submitted by bidder, it will be construed that the bidder complies to all the technical requirements of BHEL without any deviation.	
8	**Bid validity-** 4 months from the date of Part I bid opening (Mandatory to accept else bid is liable for rejection)	
9	**Delivery period-** 6, 9 & 12 months from LOI / PO date as per the details mentioned in Price bid/List of items.	
10	**Delivery term-** 1. Foreign bidder - 'CFR' Chennai port (all inc of P&F, inspection charges, freight etc). All Inspection documents for review and witness as per approved QP shall be followed and charges shall be incl. 2. Indigenous bidder - 'FOR' BHEL Trichy / Site (all inc of P&F, F&I, testing, inspection charges etc).	
11	**Container detention period-** For foreign bidders, 21 days free container detention period for cargo clearance shall be provided.	
12	**Liquidated Damage clause-** 0.5% of the price for each week of delay upto a maximum of 10% of the price of delayed / undelivered portion. For the purpose of LD calculation, BL date / LR date will be considered respectively for import and indigenous bidders. **In case of deviation to BHEL's standard LD terms, loading will be applicable and will be limited to the extent to which it is not agreed to by the bidder.**	
13	**Evaluation & Ordering-** 1. Evaluation will be done on par for both indigenous and foreign bidders. For foreign bidders, inland freight from Chennai port to BHEL Trichy, miscellaneous charges as applicable and net customs duty shall be loaded on the quoted rates. For the purpose of evaluation, Exchange Rate (SBI TT Selling rate) as on the date of Part I bid opening will be considered. 2. Item wise ordering will be resorted to. 3. Minimum Order Quantity (MOQ) / Minimum Order Value (MOV) condition will not be accepted. **Bids of such bidders (if any) insisting for MOQ / MOV will be rejected.**	
14	**Payment term-** 1. Indigenous supplier- 100% payment after 60 days after receipt and acceptance of materials (site acknowledgement to be submitted in case of Direct to Site supplies). 2. Import supplier- 100% thru CAD after 60 days from the date of receipt of documents specified in PO at BHEL bank. 3. In case of any new import supplier who is not approved with BHEL Piping Centre for any of the Material Categories of Fittings / Forgings, payment term will be on CAD basis after 60 days from the date of receipt & acceptance of material.	
15	**Price Finalization through Reverse Auction-** Finalization of prices will be thru Reverse Auction after opening of Part II price bids .Bidder shall confirm acceptance for participation in Reverse Auction (refer Annexure A for details).	

16	**Cancellation / termination of contract, default / breach of contract and risk purchase-** As per BHEL's Standard Cost and Risk clause indicated in Annexure A enclosed. By submitting the bid, vendor explicitly accepts to BHEL's requirement. **Bids deviating from BHEL's standard condition will be rejected.**	
17	**NTPC approval -** PQR qualified and Techno-Commercially acceptable bidders will be taken up for NTPC approval (Whoever not approved by NTPC for tendered items). Such bidders will be required to submit NTPC sub-supplier questionnaire (enclosed for reference) upon intimation from BHEL. Price bids of only such PQR qualified, Techno-Commercially acceptable and NTPC approved bidders will be considered for price bid opening.	
18	**Purchase Preferences for the Enquiry-** If Make in India preference is applicable as per Annexure A to NIT, declaration format as per NIT shall be submitted. In the event of non-submission of declaration, purchase preference will not be extended to bidders.	
19	**Purchase Preferences for the Enquiry-** If MSE preference is applicable as per Annexure A to NIT, supporting documents as per NIT shall be submitted. In the event of non-submission of supporting documents, purchase preference will not be extended to bidders.	
20	All other terms and conditions other than those indicated above shall be as per Annexure A- General Terms and Conditions enclosed.	
21	General note- Any disparity to terms indicated above, Annexure A and bidders offer, only the agreed terms and conditions above / Annexure shall stand valid. Bidders terms and conditions which are in conflict will be ignored and will not be taken into consideration by BHEL.	

1.0 GENERAL

Materials shall meet Indian Boiler Regulations, (IBR) in addition to the latest version of SA105, SA 182 & Code Case 2179 (for SA182 F92) as on date specified in the Purchase Order (PO).

2.0 RAW MATERIAL

(a) The raw material used shall meet the respective specification and the test certificate shall be furnished.

(b) Raw material Steel for IBR forging items to be inspected at Mill & test certificate countersigned by IBR approved Authority, if the mill is not approved under IBR as well known steel maker.

(c) For SA 182 F91& F92 (Code Case 2179): The raw material shall be procured from the Mills listed in document ref.QCP:18(latest revision). For raw material sources not listed in QCP:18, credentials shall be submitted by the vendor along with offer for BHEL review and approval. Indigenous vendors shall procure the raw material for other than SA182 F91 & F92 (code case 2179) from IBR approved sources.

(d) For SA 105: Carbon: 0.25% max.
For SA182 F92: Si: 0.10-0.50%; Ni: 0.30 max and Cu: 0.25 max.

(e) SS & Duplex SS: All raw materials used in steel making including incoming scrap shall be checked by supplier to ensure freedom from radioactivity.

3.0 PROCESS

(a) Process of manufacture shall conform to applicable standards.

(b) Unless otherwise specified in the P.O, SA182 F11/12 items shall be supplied as per class 2 and SA182 F22 shall be of Class 3 only.

(c) For SA 182 F91& F92 (Code Case 2179): Steel for forging shall be check tested for product analysis at vendor's works and shall be witnessed by IBR / IBR authorised agency. The check test report along with Mill-TC shall be certified by IBR / IBR authorised agency.

(d) **Forging:** to ensure uniformity of structure & strength with reduction ratio in area 4: 1 min from ingot to final forging, close to final size & shape. Flow lines to be parallel to axis of openings. Forged items order to this TDC shall be forged to the nearest shape before machining to final dimensions as per respective drawing.

(e) **Blooms / Billets** used for forgings (Side Length, Dia>/= 50mm) shall be UT tested & for acceptance norm refer sl.5(j). For finished bars this can be done at Final stage.

(f) Dimensions shall be as per drawings indicated in Purchase Order.

4.0 HEAT TREATMENT

4.1 All items shall be heat treated as below:

SA 105	- Normalised
SA 182 F11/ F12/ F22	- Normalised & Tempered

Stainless Steel & Duplex Stainless Steel ------ Solution Annealed

4.2 SA182 F91 & F92 :-
Normalising Temp. : 1050°C - 1080°C (for wall thickness larger than 75 mm, accelerated cooling may be done to obtain a fully martensitic structure).
Tempering Temp. : 750°C - 780°C Soaking time: 2.5min/mm of thickness (1 hr min.), still air cooling.

5.0 TESTING

(a) Product analysis:- Product analysis shall be carried out on One piece / Heat / HT lot / Size.

(b) **Corrosion test:-** Corrosion test (IGC) shall be carried out on one piece / Heat / HT lot / Size for SS & Duplex SS items.

(c) **MPI (After Heat Treatment) :**100%: As per ASTM E 709. Linear Indications like cracks, folds & other injurious defects are unacceptable.
Dry MPI : CS, AS (other than F91, F92) : all sizes.
Wet MPI : SA182 F91, F92 : all sizes.

(d) **LPI (After Heat Treatment) :**100% for SS & Duplex SS as per ASTM E165, No linear indications acceptable.

(e) **SS & Duplex SS:** Finished forgings shall be checked for radioactive contamination and reported. Survey meter shall be used to measure at 5cm near the surface. Acceptance limits: Shall be less than 0.1 milli Rontgen (MR) per hr or I micro Sievert per hr.

(f) **Tension test:-**Tension test shall be carried out on one Test piece for each specification, heat, heat treatment lot and size.

(g) **Bend test:-** (a) Bend test for CS (SA 105) : One sample of 19 mm thick and 25mm width to be bent 180 deg around mandrel of radius 6.35mm.
(b) Bend test for AS (SA182): One Sample of 25.4 mm width and thickness = t to be bent 180 deg around mandrel of radius =1.5 t. Test on representative sample is also acceptable.

(h) **Photomicrograph test for F91 & F92 :-** Photomicrograph test shall be carried from a specimen of forging in the as finished condition for each individual size (OD & Thickness) from each heat per heat treatment batch. Acceptance norms - The Material shall be free from any micro fissures. Microstructure shall show tempered martensite and also to be examined for any grain growth. Photomicrograph with 500x (min) magnification along with Photomicrograph report to be provided. The actual magnification shall be indicated.

(i) **Hardness test: -** (i) For SA 182 F91 :- 100% of items; Value: 191-250 BHN
(ii) For SA 182 F92 :- 100% of items; Value: 196-250 BHN
(iii) For Duplex SS :- 100% of items; Value – 290 HBW max.
(iv) For other specn :- 10% of items; Value - As per specn
The hardness test values shall be indicated in the Test certificate.

(j) **Ultrasonic Test: -** All items shall be ultrasonically tested as per SA388 and acceptance norms shall be as per ASME Sec VIII Div .2 Cl. 3.3.4.

UT Qualification: - For Forged Bars/Rounds: OD = 40mm and above.
For others: OD >/= 200mm or Thickness >/= 6mm

6.0 POSITIVE MATERIAL IDENTIFICATION (PMI) FOR ALLOY STEEL FITTINGS.

Each alloy steel item shall be checked for the correctness of the material by using X-ray fluorescence principle or spark emission spectrography.

7.0 WORKMANSHIP, FINISH AND REPAIR

All items shall have smooth, workman like finish, and to be free from scale & defects like laps, seams, folds, cracks, etc. Pickled & Passivated as per ASTM A380 for SS & Duplex SS items. Surface defects can be removed by mechanical means and defective areas smoothly dressed up with the adjacent surface. Minimum dimension after repair shall meet drawing / Specification. Repairs by fusion welding are prohibited.

8.0 PAINTING, COLOUR CODING, MARKING, PACKING & END PROTECTION

8.1 **PAINTING: -**

Fittings supplied to BHEL's Stores: All items except SS & Duplex SS to be applied with resin type rust preventive coating with visibility to punched and stenciled details on outside.

Fittings supplied directly to BHEL's Sites(DTS):

a) **Surface preparation:** Blast cleaning
b) **Primer coat:** One coat of 60 microns of In-Organic Ethyl Zinc Silicate primer.
c) **Finish coat:** Two coats of 20 microns each of Heat Resistance Aluminium paint to IS13183 Gr-1.
d) **Total DFT:** 100 microns minimum.
e) **Shade:** Aluminium -- for all fittings.

The internal surface shall be protected with rust preventive coating or rust inhibitor.

SS & Duplex SS items to be surface treated as per ASTM A380 both inside and outside.

8.2 **COLOUR CODING:** All items shall be colour coded circumferentially at ends as given below.

SA105	=	Blue
SA182 F11	=	Green & White
SA182 F12	=	Black & Red
SA182 F22	=	Blue & Red
SA182 F91	=	Brown & Red
SA182 F92	=	Brown & Blue
SA182 F316	=	Black & Blue
SA182 F316L	=	Blue, Brown & Yellow
SA182 UNS32205 (Duplex Stainless Steel)	=	Red, White & Green

8.3 **MARKING** (In English only) **:-**

8.3.1 The items dispatched to **BHEL Stores** shall be hard punched / etched with Material code, Heat number, material specification, maker`s emblem, Inspectors seal and Statutory authorities seal (as applicable).
In addition, the above details along with size shall be paint stencilled on the fittings.

8.3.2 The items dispatched directly to project site as **DTS** shall be hard punched and paint stencilled with DU code (14-digit work order du detail) as given by purchase in addition to marking done as per para 8.3.1.

8.4 **PACKING AND END PROTECTION:** Machined ends of the items shall be well protected using end caps and shall be suitably packed in box / crate to avoid transit & other damages.

9.0 INSPECTION & CERTIFICATION (In English only): -

9.1 All items are to be Inspected at the manufacturer's works by the Inspection agencies / authorities as per IBR and as indicated in the P.O. IBR Forms shall be submitted as indicated below.

A) Well-Known Forger: -

(i) *Finished Fittings:* No further fabrication like Machining/Cutting at shop: Form IIIC.

(ii) *Semi-Finished Fittings:* Form IIIG signed by Forger.

B) Not Well-Known Forger: -

(i) *Finished Fittings:* No further fabrication like Machining/Cutting at shop: Form IIIC.

(ii) *Semi-Finished Fittings:* Form IIIG – counter signed by IBR authorities.

The above IBR forms shall be submitted as applicable along with the Work Test Certificate and shall include the following.

1. Test Certificate Number, Manufacturer Name & date.
2. BHEL P.O Number & Amendment Number (if any)
3. BHEL P.O. Serial Number
4. BHEL TDC Number
5. Size-wise Quantity
6. Specification, Grade & Year of code.
7. Heat/Melt Number
8. Steel making / forming process
9. Ladle and product Analysis of Raw Material.
10. IBR approved certificate for manufacturing creep resistance steel in case of indigenous steel makers.

*11. Product analysis report.
*12. Tensile Test report
*13. Bend Test report.
*14. Intergranular corrosion test report for SS & Duplex SS
*15. Measured radioactivity levels shall be reported in the Mill test certificate (Not to be recorded in IBR Form).
*16. Repair details if any, certified copy of TC for starting material.
*17. Guarantee of HTP shall be given in the test certificate as follows if hydro test is not carried out: - "Forgings are capable of with standing without failure, breakage or impairment of their serviceability a hydrostatic test pressure equal to that prescribed for the specified matching pipe of equivalent material".

*Details furnished in the Test certificate in lieu of chart/report is acceptable.

9.2 The following reports shall be **furnished separately** along with the Form III C/G & MTC indicated in para 9.1 above.

i. NDE reports for VT, LPI, MPI, UT (Reports in soft copy + hard copy).
ii. Positive Material identification (PMI) report for Alloy steel.
iii. Heat Treatment Chart.
iv. Hardness Test report.
v. Photomicrograph test report along with photomicrograph with minimum 500 x magnifications.
vi. Dimensional report (as built drawing with dimensions)

10.0 AUDIT CHECKS AT BHEL

BHEL reserves the right to carry out audit checks for chemistry, HT condition, mechanical test and NDT on representative test bars or job.
Supplies found defective during check or subsequent processing at BHEL are liable for rejection.

11.0 Records of Revisions:-

Revision 02 : Material specification SA 182 F316 added.

Revision 03 : (i) Para 4.0, 6.0 included.
(ii) Para 5.0 (b),(c),(h),(j), 8.0 and 9.0 (17) are revised.

Revision 04 : (i) New material specification SA 182 F92 added.
(ii) Para 1.0, 3.0, 4.2, 5 (f), (g) & 8.2 are revised.
(iii) Para 5 (a) to (h) are modified for better clarity.

Revision 05 : (i) Para 10.0 added.
(ii) Para 2 (c), 3.0, 8.2, 8.3.2 & 9.0 are revised.
(iii) Para 5 (c), 5 (d) & 5 (i) are modified for better clarity.

Revision 06 : (i) Para 2 (b), 3 (e),(g) & 9.0 are revised.
(ii) Para 4.1, 4.2, 5(h), 6.0, 8.1, 8.2, 8.3 & 8.4 are modified for better clarity.

Revision 07 : (i) Para 3 (e) deleted-(Creep Test (Type Test) requirement), further clauses renumbered.
(ii) Para 9.0 revised.

Revision 08 : (i) Para 2.0(b), 3.0(d) & 5.0(g) are revised.
(ii) Para 4.2 modified for better clarity.

Revision 09 : (i) Items : Forged Y-Piece & Forged-Tee are added.
(ii) Para 2.0(b)(e), 5.0(e) & 9.2 are added.
(iii) Para 3.0(e) & 9.0 modified for better clarity.

Revision 10 : (i) Duplex Stainless Steel (UNS32205) added and relevant technical requirements 2(e), 4.1, 5.0(b)(d)(e)&(i), 7.0,8.1 & 9.1(14) are indicated.
(ii) Para 5.0(j) & 8.1 revised.
(iii) Para 9.1 modified w.r.t. IBR form requirements for forgings.

Vivekananda Yellu/ QA	Rajitha K / MM	C. Karunakaran / Engg	P Ravi Shankar / Quality
Prepared by	Reviewed by		Approved by

ENDORSEMENT SHEET FOR DRAWING / DOCUMENT

TO BE FILLED IN BY SUPPLIER AT TIME OF SUBMISSION

Project Name	**PATRATU STPP PHASE-I – (3X 800 MW)**
Contract No:	**CS-9585-001-2** **BHEL WORK ORDER NOS:- 7381, 7382, 7383, 7384, 7385 (MAIN BOILER) & 7386(AUX.BOILER)**
Package name	EPC PACKAGE
Main Supplier	BHEL, Piping Centre, Chennai
Manufacturer Name	NTPC Approved Sub-Contractor and Sub-Vendors
Project/package Specific document	BHEL QP ref. : 7381:QPC:20:Rev 00.Date: 25.06.2018
	NTPC ref. : 9585-001-102-QVM-Q-240
Drawing title	Quality Plan for SEAMLESS BW FITTINGS - Gr-91/92 MATERIAL.
Reference Project Name	TELANGANA STPP PHASE-I (2X 800 MW)
Reference Contract No:	CS-9591-101-2
Reference Package name	SG PACKAGE
Reference Main Supplier	BHEL, Piping Centre, Chennai
Reference Manufacturer Name	NTPC Approved Sub-Contractor and Sub-Vendors
Reference Project/package document	BHEL QP ref.: 7313:QPC:19:Rev 02. Date: 21.05.2018
	NTPC Doc No.: 9591-102-102-QVM-Q-001A Rev 02. Date: 04.06.2018
Reference Drawing title	Quality plan for SEAMLESS BW FITTINGS - Gr-91/92 MATERIAL.

i) ☑ Certified that the item /component is identical to that considered for reference document approval.

ii ☐ That there are minor changes in the item / component with respect to that considered for reference document approval and the same affect the reference document slightly as indicated below.

SIGN: (Main Supplier)

DATE: 25-06-2018

NTPC (Approved by/Date/Seal)

BHEL-UNIT: BHEL, Piping Centre, Chennai

बी एच ई एल BHEL	CONTRACTOR'S NAME & ADDRESS BHEL PIPING CENTRE, CHENNAI SUPPLIED BY NTPC APPROVED SUB-VENDORS	MANUFACTURING QUALITY PLAN **ITEM :SEAMLESS BW FITTINGS CONFORMING TO ASME SA234 WP91, ASTM A234WP92 & ASME SA182 F91/F92 (BOUGHT OUT ITEM)** **System : Power Cycle Piping** BHEL Customer No's : 7313, 7314, 7325 (MAIN BOILER) & 7315(AUX.BOILER)	QP No: 7313:QPC:19 Rev: 02 Dt:21.05.2018
			PROJECT : TELANGANA STPP PHASE-I (2X 800 MW) **PACKAGE** : SG Package **CONTRACT No.**: CS-9591-101-2 MAIN-SUPPLIER : BHEL, Piping centre

S.No	COMPONENT & OPERATIONS	CHARACTRISTICS	CLASS	TYPE OF CHECK	QUANTUM OF CHECK		REFERENCE DOCUMENT #	ACCEPTANCE NORMS	FORMAT OF RECORDS		AGENCY			REMARKS
					M	C/N					M	C	N	
1	2	3	4	5	6a	6b	7	8	9	D*	** 10			11
1.0	**Raw Materials & Fittings shall be procured from NTPC approved Sources. The Test Certificate received from RM manufacturer shall meet IBR requirements.**													
1.1	**Seamless Pipe/Forging**	**a) Chemical Composition, Mechanical Properties**	**Major**	**Verification of MTC**	**100%**	**100%**	**ASME SA335P91/P92 ASME SA182F91/F92 For Grade 92 : Ni-03%Max and Cu-025%Max**		**MTC**	**X**	**P**	**V**	**V**	**MTC - Mill Test Certificate Refer Note 01**
		b) UT Condition	**Major**	**Verification of MTC**	**100%**	**100%**	**## For P92 :** UT as per EN10246:7 1996 or equivalent, with longitudinal notch of 5% epth of thickness (min 0.3mm and max. 1.5mm); **For F92 :** UT as per SA388 with Cl.3.3.4 of ASME Sec-VIII, Div.2 for Forging/Bars of dia or Thk >50mm			**X**	**P**	**V**	**V**	**## : Hydro/UT for other material grades**
		c) Hardness test	**Major**	**Verification of MTC**	**100%**	**100%**	**ASME SA335P91/P92 ASME SA182F91/F92**			**X**	**P**	**V**	**V**	
		d) Dimensions Outer Dia.,Thk.etc	**Major**	**Measurement**	**100%**	**100%**	**ASME SA335P91/P92 ASME SA182F91/F92**		**HC**	**X**	**P**	**V**	**V**	
		e) Material confirmation Test (Chemical)	**Major**	**Spectro / X-ray fluoroscence**	**100%**	**100%**	**ASME SA335P91/P92 ASME SA182F91/F92**		**PMI Report**	**X**	**P**	**W****	**V**	**W** : Witness by IBR**
2.0	**IN PROCESS INSPECTION**													
2.1	**Material receiving inspection**	**Marking & transfer of identification**	**Major**	**Visual**	**100%**	**--**			**HC**	**X**	**P**	**V**	**V**	**HC : History card Refer Note 02**
2.2	**Design Proof Test (only for Formed Fittings)**	**Qualification of Fittings**	**Major**	**Burst Test**	**100%**	**100%**	**As per ASME B16.9 / applicable design code**		**Internal report**	**X**	**P**	**V/W***	**V**	**W*: Witness required if report is not available**
2.3	**Fitting Forming Procedure**	**Procedure qualification**	**Major**	**Review**	**100%**	**100%**	**ASME SA234WP91/ASTM A234WP92 ASME SA182F91/F92**		**$Appd.Procedure**	**X**	**P**	**V**	**V**	**$ Vendor's procedure to be approved by BHEL**

VIVEKANANDA YELLU Dy.Mgr /QA	P RAVI SHANKAR AGM/Q	LEGEND: * RECORDS, INDENTIFIED WITH "TICK" (**X**) SHALL BE ESSENTIALLY INCLUDED BY SUPPLIER IN QA DOCUMENTATION. ** M: MANUFACTURER/SUB-SUPPLIER, C: THIRD PARTY INSPECTING AGENCY APPROVED BY IBR&BHEL, N: NTPC; P: PERFORM, W: WITNESS, V: VERIFICATION & R: REVIEW AS APPROPRIATE CHP: NTPC SHALL IDENTIFY IN COLOUM 'N' AS 'W' #: NTPC INSPECTION ENGINEER TO CHECK,APPROVAL DATE/REVISION NO. OF REF.DOCUMENTS AT THE TIME OF INSPECTION	**NTPC**	DOC. NO. 9591-102-102-QVM-Q-001A REV….. CAT…
MAIN-SUPPLIER	MAIN-SUPPLIER			
SIGNATURE	PAGE 01 OF 04		FOR NTPC USE:	REVIEWED BY / APPROVED BY / APPROVAL SEAL

बी एच ई एल BHEL	CONTRACTOR'S NAME & ADDRESS BHEL PIPING CENTRE, CHENNAI SUPPLIED BY NTPC APPROVED SUB-VENDORS	MANUFACTURING QUALITY PLAN **ITEM :SEAMLESS BW FITTINGS CONFORMING TO ASME SA234 WP91, ASTM A234WP92 & ASME SA182 F91/F92 (BOUGHT OUT ITEM)** **System : Power Cycle Piping** BHEL Customer No's : 7313, 7314, 7325 (MAIN BOILER) & 7315(AUX.BOILER)	QP No: 7313:QPC:19 Rev: 02 Dt:21.05.2018

PROJECT : TELANGANA STPP PHASE-I (2X 800 MW)
PACKAGE : SG Package
CONTRACT No.: CS-9591-101-2
MAIN-SUPPLIER : BHEL, Piping centre

S.No	COMPONENT & OPERATIONS	CHARACTRISTICS	CLASS	TYPE OF CHECK	QUANTUM OF CHECK		REFERENCE DOCUMENT #	ACCEPTANCE NORMS	FORMAT OF RECORDS		AGENCY			REMARKS
					M	C/N					M	C	N	
1	2	3	4	5	6a	6b	7	8	9	D*	** 10			11
2.4	Forming of fittings	Process parameters	Critical	Temperature, Measurement & Visual	100%	--	Appd.Procedure		Internal report	X	P	V	V	
2.5	Post forming/forging Heat Treatment	Rate of Heating, Rate of Cooling & Soaking time	Critical	Temp & Time graph	100%	100%	Refer Note 03		HT Chart	X	P	R	R	Refer Note 03
2.6	Test Piece Marking	Selection of Test coupons	Major	Measurement & Marking	One Sample / Heat / Size/ HT Batch	--	As per ASTM A370		Internal report	X	P	W	V	Refer Note 02 & Refer Note 07
3.0	TESTS													
3.1	Chemical properties	Product Analysis	Major	Chemical Composition	One Sample / Heat / Size	One Sample / Heat / Size	ASME SA234WP91/ASTM A234WP92 ASME SA182F91/F92		Test Report	X	P	W**	V	W** : Witness by IBR
3.2	Mechanical properties	YS, UTS, % Elongation (Mandatory)	Major	Tensile Strength,	One Sample / Heat / Size/ HT Batch	One Sample / Heat / Size/ HT Batch	ASME SA234WP91/ASTM A234WP92 ASME SA182F91/F92		Test Report	X	P	W**	V	Refer Note 04
3.3	Hardness test	Hardness	Major	Measurement	100%	10% / 10%	ASME SA234WP91/ASTM A234WP92 ASME SA182F91/F92		Test Report	X	P	W	W	
3.4	NDE	(a) Volumetric Defect	Major	UT#	100%	10% / 10%	ASME SA388	ASME SecVIII Div-2, Cl3.3.4	Test Report	X	P	W	W	# : For dia>=200mm 100% witness by BHEL & 10% by NTPC
		(b) Sub-surface Defect	Critical	WET MPI	100%	10% / 10%	ASTM E709	ASME B31.1 Cl. 136.4.3	Test Report	X	P	W	W	
3.5	Photomicrographic test	Microstructure	Critical	Insitu Micro	One Sample / Heat / Size/ HT Batch	One Sample / Heat / Size/ HT Batch	No micro fissures. Microstructure shall show tempered martensite. Grain growth if any has to be examined further. For P92 : Delta Ferrite - 3%Max.		Test Report & Photomicrograph (Magnification at 500x minimum)	X	P	W	V	Refer Note 08

VIVEKANANDA YELLU Dy.Mgr /QA	P RAVI SHANKAR AGM/Q	LEGEND: * RECORDS, INDENTIFIED WITH "TICK" (X) SHALL BE ESSENTIALLY INCLUDED BY SUPPLIER IN OA DOCUMENTATION. ** M: MANUFACTURER/SUB-SUPPLIER, C: THIRD PARTY INSPECTING AGENCY APPROVED BY IBR&BHEL, N: NTPC; P: PERFORM, W: WITNESS, V: VERIFICATION & R: REVIEW AS APPROPRIATE CHP: NTPC SHALL IDENTIFY IN COLOUM 'N' AS 'W' #: NTPC INSPECTION ENGINEER TO CHECK,APPROVAL DATE/REVISION NO. OF REF.DOCUMENTS AT THE TIME OF INSPECTION	NTPC	DOC. NO. 9591-102-102-QVM-Q-001A REV….. CAT…
MAIN-SUPPLIER	MAIN-SUPPLIER			
SIGNATURE	PAGE 02 OF 04		FOR NTPC USE:	REVIEWED BY / APPROVED BY / APPROVAL SEAL

	CONTRACTOR'S NAME & ADDRESS BHEL PIPING CENTRE, CHENNAI SUPPLIED BY NTPC APPROVED SUB-VENDORS	MANUFACTURING QUALITY PLAN **ITEM :SEAMLESS BW FITTINGS CONFORMING TO ASME SA234 WP91, ASTM A234WP92 & ASME SA182 F91/F92 (BOUGHT OUT ITEM)** **System : Power Cycle Piping** BHEL Customer No's : 7313, 7314, 7325 (MAIN BOILER) & 7315(AUX.BOILER)	QP No: 7313:QPC:19 Rev: 02 Dt:21.05.2018	**PROJECT** : TELANGANA STPP PHASE-I (2X 800 MW) **PACKAGE** : SG Package **CONTRACT No.**: CS-9591-101-2 MAIN-SUPPLIER : BHEL, Piping centre

S.No	COMPONENT & OPERATIONS	CHARACTRISTICS	CLASS	TYPE OF CHECK	QUANTUM OF CHECK		REFERENCE DOCUMENT #	ACCEPTANCE NORMS	FORMAT OF RECORDS		AGENCY			REMARKS
					M	C/N					M	C	N	
1	2	3	4	5	6a	6b	7	8	9	D*	** 10			11
3.6	First Off Trail (FOT)	Ovality, Thicknning & other dimensions	Major	Measurement	100%	100%	Drawings & applicable standards		FOT Report	X	P	W	V	
4.0	**FINAL INSPECTION**													
4.1	Dimensional Inspection	Surface check, Bend angle, Radius, End-to-end dimn, Ovality, Thickness, Wrinkles, d1 at ends, Edge preparation & other dimensions as per Drg.	Major	Measurement	100%	100%	ASME B16.9, BHEL Drg.. & P.O.		Report	X	P	W	W	
4.2	Positive Material Identification	Chemical check	Critical	Spectro / X-ray fluoroscence	100%	100%	ASME SA234WP91/ASTM A234WP92 ASME SA182F91/F92		Test Report	X	P	W	V	Chemical properties shall meet the requirements of Sl.No.1.1(g) above
4.3	Marking & Identification	Marking / Color coding	Major	Visual	100%	100%	Refer Note 12		Report	X	P	V	V	Refer Note 12
4.4	Surface Protection & Painting	Appearance & DFT		Visual & Measurement	100%	100%	Project Specific NTPC approved Painting Scheme		Report	X	P	W	V	Refer Note 13
4.5	Preservation & Packing	End Protection	Major	Visual	100%	100%	Refer Note 13		Report	X	P	V	V	Refer Note 14
5.0	**DOCUMENTATION**													
5.1	Inspection clearance	(a) IBR Certification	Major	All tests as per IBR	100%	100%	IBR		FORM-IIIC	X	P	V	--	
		(b) Documentation	Major	Verification	100%	100%	All reports as required in this QAP		Report	X	P	V	V	
5.2	Despatch Clearance	Despatch Clearance	Major	Verification	100%	100%			MDCC	X	P	V	CHP	Refer Note 11

VIVEKANANDA YELLU Dy.Mgr /QA	P RAVI SHANKAR AGM/Q	LEGEND: * RECORDS, INDENTIFIED WITH "TICK" (X) SHALL BE ESSENTIALLY INCLUDED BY SUPPLIER IN QA DOCUMENTATION. ** M: MANUFACTURER/SUB-SUPPLIER, C: THIRD PARTY INSPECTING AGENCY APPROVED BY IBR&BHEL, N: NTPC; P: PERFORM, W: WITNESS, V: VERIFICATION & R: REVIEW AS APPROPRIATE CHP: NTPC SHALL IDENTIFY IN COLOUM 'N' AS 'W' #: NTPC INSPECTION ENGINEER TO CHECK,APPROVAL DATE/REVISION NO. OF REF.DOCUMENTS AT THE TIME OF INSPECTION	NTPC	DOC. NO. 9591-102-102-QVM-Q-001A REV..... CAT...
MAIN-SUPPLIER	MAIN-SUPPLIER			
SIGNATURE	PAGE 03 OF 04		FOR NTPC USE:	REVIEWED BY / APPROVED BY / APPROVAL SEAL

	CONTRACTOR'S NAME & ADDRESS BHEL PIPING CENTRE, CHENNAI SUPPLIED BY NTPC APPROVED SUB-VENDORS	MANUFACTURING QUALITY PLAN **ITEM :SEAMLESS BW FITTINGS CONFORMING TO ASME SA234 WP91, ASTM A234WP92 & ASME SA182 F91/F92 (BOUGHT OUT ITEM)** **System : Power Cycle Piping** BHEL Customer No's : 7313, 7314, 7325 (MAIN BOILER) & 7315(AUX.BOILER)	QP No: 7313:QPC:19 Rev: 02 Dt:21.05.2018	**PROJECT** : TELANGANA STPP PHASE-I (2X 800 MW) **PACKAGE** : SG Package **CONTRACT No.**: CS-9591-101-2 MAIN-SUPPLIER : BHEL, Piping centre

S.No	COMPONENT & OPERATIONS	CHARACTRISTICS	CLASS	TYPE OF CHECK	QUANTUM OF CHECK		REFERENCE DOCUMENT #	ACCEPTANCE NORMS	FORMAT OF RECORDS		AGENCY			REMARKS
					M	C/N					M	C	N	
1	2	3	4	5	6a	6b	7	8	9	D*	** 10			11

NOTES:

1.0 The raw materials shall be as per drawing and NTPC Technical Specifications and to be procured from NTPC approved vendors.

2.0 Seal transfer on pieces to be cut shall be done by IBR inspector.

3.0 **POST FORMING / FORGING HEAT TREATMENT :-**

Normalise at 1050 - 1080 deg.C & Temper at 750-780 deg.C

Normalising and Tempering shall be carried out within 72 hours after completion of forming.The items shall be kept dry and stress free. The temperature shall be brought down to 0 to 100 deg.C after hot forming before normalizing and also after normalizing before tempering. Normalising and tempering of Gr91/Gr92 shall be done encompassing the entire component. Soaking shall be 1Hrs minimum.

4.0 Chemical & Mechanical tests shall be performed at in-house or reputed laboratories.

5.0 All NDE procedures shall be submitted to BHEL for review. NDE procedures shall have Level-III certified personnel approval incase of in-house. Incase of non-availability of inhouse facility NDE shall be performed by reputed laboratories.

6.0 Items shall be visually checked. No hard scales shall be present on inside & outside surfaces.

7.0 Gas cutting & Plasma cutting are prohibited for Gr91/Gr92 material. Repair by welding is prohibited.

8.0 Three replicas in one fitting. Actual magnification shall be indicated in the photomicrograph. Photomicrographs shall be provided as records for review & acceptance and future in-service reference. Delta Ferrite <or=3%,when measured as per VD TUV1272 for P92 fittings

9.0 All items shall be inspected and cleared by BHEL, IBR authorities & NTPC.

10.0 Necessary IBR Requirements shall be fulfilled and IBR documents to be submitted.

~~**11.0** The Sub Vendor shall co-ordinate with NTPC and obtain MDCC before despatch of finished material and same shall be furnished to BHEL~~.

12.0 The finished components shall be punched with DU code (14 digit work order du details),Heat number, material specification, maker`s emblem, Inspectors seal and Statutory authorities seal. In addition, the DU code, Heat no. and Material specification shall also be paint stencilled. **Colour Coding : Gr91** - Brown & Red; **Gr92** - Brown & Blue

13.0 Surveillance of Surface preparation, adhesion,Painting process & DFT by NTPC inspector.

14.0 Machined ends shall be well protected using end caps and suitably packed to avoid transit & other damages. Tack welding is prohibited.

VIVEKANANDA YELLU Dy.Mgr /QA	P RAVI SHANKAR AGM/Q	LEGEND: * RECORDS, INDENTIFIED WITH "TICK" (X) SHALL BE ESSENTIALLY INCLUDED BY SUPPLIER IN QA DOCUMENTATION. ** M: MANUFACTURER/SUB-SUPPLIER, C: THIRD PARTY INSPECTING AGENCY APPROVED BY IBR&BHEL, N: NTPC; P: PERFORM, W: WITNESS, V: VERIFICATION & R: REVIEW AS APPROPRIATE CHP: NTPC SHALL IDENTIFY IN COLOUM 'N' AS 'W' #: NTPC INSPECTION ENGINEER TO CHECK,APPROVAL DATE/REVISION NO. OF REF.DOCUMENTS AT THE TIME OF INSPECTION	**NTPC**	DOC. NO. 9591-102-102-QVM-Q-001A REV….. CAT…
MAIN-SUPPLIER	MAIN-SUPPLIER			
SIGNATURE	PAGE 04 OF 04		FOR NTPC USE:	REVIEWED BY / APPROVED BY / APPROVAL SEAL

429-024

PURCHASE / MM / BOI
ENQUIRY DEVIATION

		PAGE	
SCHEDULE OF DEVIATION TO BOI ENQUIRY NO:	4102100029	DATE	28.10.2021
DESCRIPTION	Forged Tees - F92		
SPECIFICATION	TDG 104 Rev 10 7381 QPC20		
Drawing No	As enclosed with tender		
QUALITY PLAN	7381 QCP 20		
PACKING PROCEDURE	PC-PKG-01 Rev 00		

DOCUMENT REFERENCE	BHEL CALLED FOR	FIRM'S ALTERNATIVE OFFER

CERTIFIED THAT OTHER THAN THE ABOVE DEVIATIONS, WE ARE ACCEPTING ALL THE OTHER SPECIFICATIONS AND REQUIREMENTS IN FULL TO YOUR ENQUIRY.

STATION:

DATE: SIGNATURE OF FIRM'S REPRESENTATIVE FIRM SEAL

NOTE 1. Deviations should be taken only in the extreme case.
2. If necessary, use additional sheets with page control number.

PACKAGING INSTRUCTIONS FOR PIPING COMPONENTS
PC: PKG: 01

Revision summary

Rev No	Revision Details	Issued on
00	Fresh issue	28-05-2014

Prepared by	Reviewed & Approved by
S.ARUN KUMAR	K.VEDAPRASAD

Contents

1. Scope
2. Packaging
3. Criteria for Selection of Packaging
4. Types of packaging
5. Sling protections
6. Marking and Labelling
7. Packing list
8. General Instructions for packaging
9. Reference drawings
10. Cautionary symbols
11. Packing reference table
12. Check list

1. SCOPE

This procedure elicits the general requirements to be complied with for packaging of piping components. The packaging is intended to preserve and protect the contents.

The handling, storage, cleaning, packaging, and preservation of items shall be controlled to prevent damage or loss and to minimize deterioration.

2. PACKAGING

This procedure contains requirements for packaging of items for protection against corrosion, contamination, physical damage, or any effect that would lower the quality or cause the components to deteriorate during the time they are shipped and stored at sites.

Items shall be inspected for cleanliness immediately before packaging. Dirt, oil, residue, metal chips or other forms of contamination shall be removed.

Adequate protection shall be provided against mechanical damage and atmospheric corrosion in transit and, for equipment suitable for outside storage, for prolonged storage at the site prior to installation.

Water proof barrier material – high density polythene shall be used as a resistant to grease and water; it shall protect items from airborne and windblown soils.

Desiccants like silica gel to be used inside pipe components. Silica gel shall conform to IS 3401.The gel is to be packed in sachets placed at different positions inside the components for absorbing moisture. The quantity of silica gel shall be adequate for storage period of one year.

Components to be placed in such a way that metal to metal contact is avoided.

For mechanical components, (1) all openings shall be covered or plugged with substantial (1/2 inch minimum thick) one piece plywood or metal closures, securely fastened and suitable for prolonged exposure prior to final installation; (2) all tapped openings in equipment shall be plugged with plastic plugs to protect internal threads; and (3) all welding end connections shall be provided with adequate weld bevel protectors to protect from corrosion and physical damage.

Austenitic stainless steel and nickel-based alloy materials shall be handled in such a manner that they are not in direct contact with carbon steel materials or with materials containing halogen, sulphur, zinc and lead.

Each components/item of stainless steel materials should be wrapped with high density polythene.

All equipment shall be packed, securely anchored (skid mounted when required) and weather protected for the shipment method adopted.

Temporary bracing or supports, marked and tagged for removal after equipment installation, shall be provided to prevent damage during shipment and shall be painted bright, fluorescent yellow.

3. Criteria for Selection of Packaging:

Packages are to be made according to categories listed in Table-6 (see page – 24), depending on the type of materials and size.

4. TYPES OF PACKAGING:

4.1 CRATES

- These are to be made of seasoned wood and are intended for packaging heavy materials Viz., straight pipes and pipes with attachments.
- The crates are to be lined with hi-density polythene, to prevent entry of moisture.
- The dimensions of the crates are to be restricted to 20 x5x5 feet.
- Pipes up to OD 350mm are to be crated.
- Pipes are to be stacked inside the crate so that the weight of the pipe does not rest on branch stubs or carrier plates.
- Contents of the crate should not come in contact with each other or with the crating, and should be adequately cushioned to preserve the painting.
- The gross weight of the crate should not exceed 2 Tons.
- For further instructions refer ASTM D6039 Standard Specification for Open and Covered wood Crates.

WOODEN CRATE

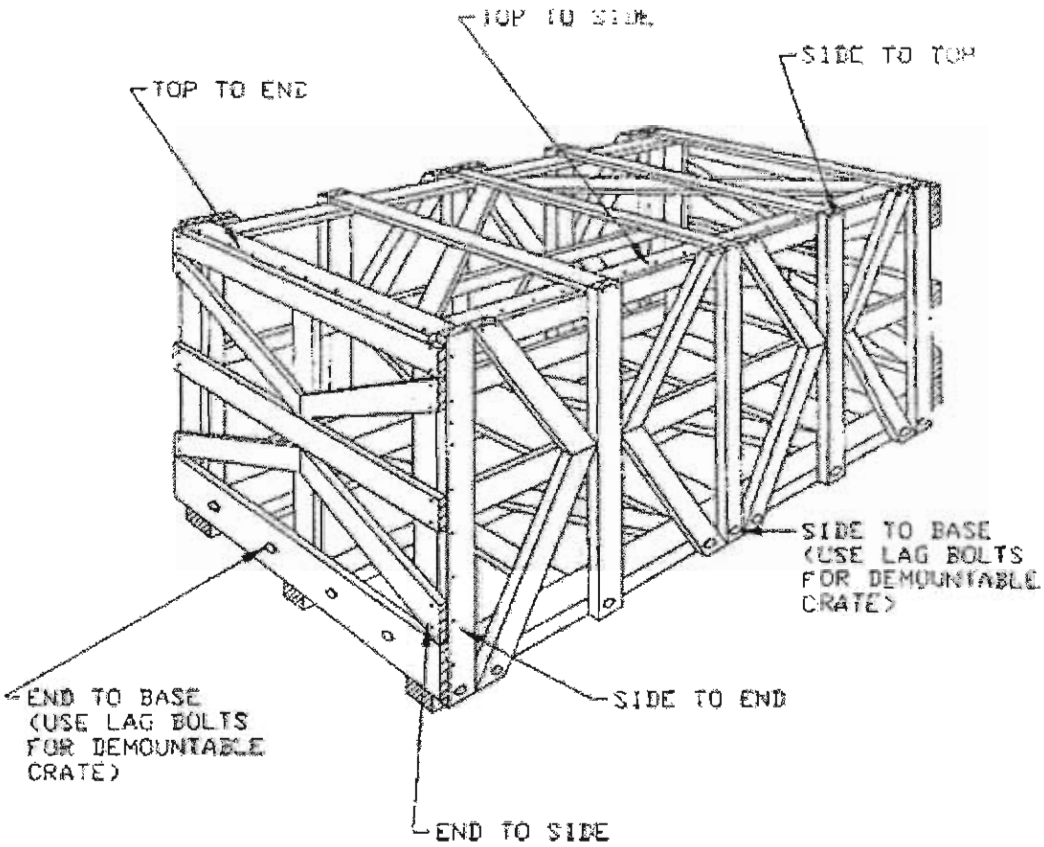

Max Net Load (KGS)	Length (mm)	Width (mm)	Height (mm)
2000	6096	1524	1524

All the dimensions shown in the above table are maximum inside dimensions.

4.3 SADDLES

- Saddles are defined as profiled supports made of wood, and are used to cradle and support Tanks, pipe bends and pressure vessels.
- Ensure that the end chamfering of the bends are duly protected for the transit.
- Tanks are to be completely drained and dried.
- Adequate amount of the specified desiccant is to be placed inside the tank/ vessel.
- Ensure that all openings are covered and /or plugged.

4.4 CASES

- Other components such as fittings and Mitres are to be packed inside wooden cases.
- The insides of the cases are to be lined with hi-density polythene.
- Air vents to be provided in the cases for ventilation.
- Components to be placed in such a way that metal to metal contact is avoided.
- Small components like Fasteners, gaskets are to be packed in high density polythene covers and placed inside the wooden cases.
- Holes to be provided in the case floor to act as drains.

4.5 BUNDLES

- Bundles are transportable units where a large number of straight pipes of the same diameter and even lengths are arranged securely and are fit to be lifted by cranes and also stacked.
- Pipe ends should be covered fully with plastic end caps.
- Pipes can be bundled only when they can bear the stack compression load without additional support.
- Clamps made of wood or steel clamps with wooden inserts are to be used.
- Clamps must be locked firmly so that the pipes cannot slide out of bundle.
- Bundle must be held together by at least three sets of clamps as indicated in the diagram.

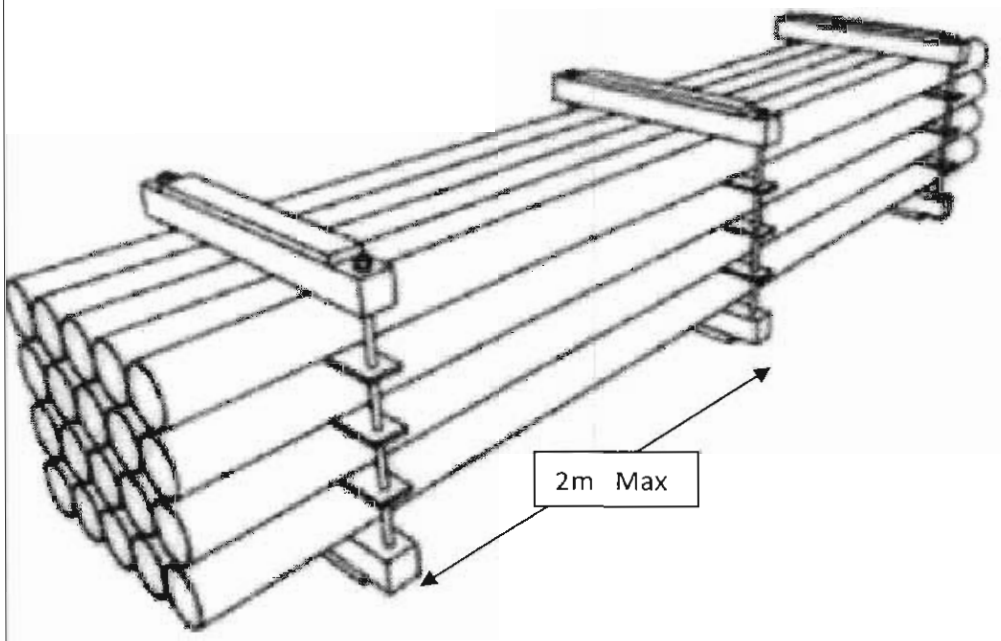
2m Max

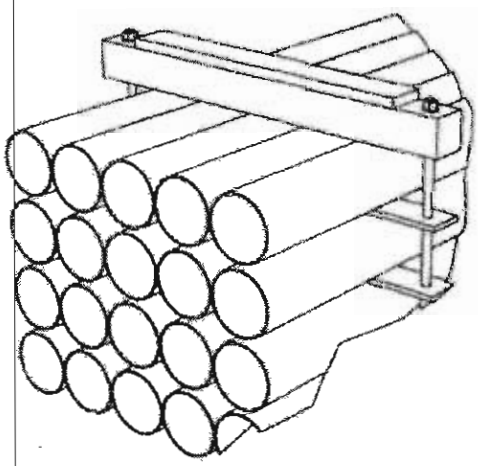

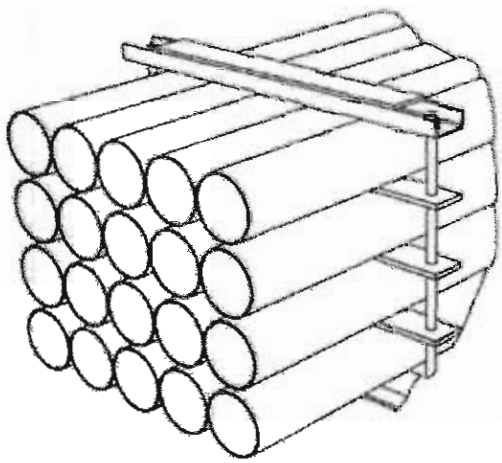

5. SLING PROTECTIONS

The lifting points of the case or crate or bundle must be equipped with sling protections suitable to the respective package gross weight.

6. MARKING AND LABELLING

Components and their containers shall be identified by marking. Shipping marks shall be on all sides of package. The shipping marks shall be at least 3 inches high where space permits. Markings are to be in black paint or ink depending on shade of the package surface.

Cautionary symbols to be stencilled in red waterproof paint or ink.

7. PACKING LIST

One complete packing list inside a watertight envelope must be affixed outside of each package and be covered by sheet metal. One more copy of the packing slip wrapped in polyethylene bag is to be kept inside the box at the pertinent place.

8. General Instructions for packaging

- The quantity of Slides / Runners is selected depending upon the weight and over-all dimension of the Load, to be carried. Table-1 and 2 details out the number of Slides, length and cross sections of the Slides to be provided with their carrying capacity.
- The construction of bottom frame is as shown in the Figure-2.
- The construction of the top frame is, as shown in the figure -3.
- Thickness of the boards, used for sheathing for the top, sides and end panels, shall be 25 mm.
- The top of the Box consist of Beam supported on top traverse bar and sheathing, as shown in the figure- 3.
- The dimension of items 1, 2 f figure - 3 shall be as table - 3.
- Diagonal braces shall be used in packing cases with height, exceeding 600 mm as shown in the figure- 4.
- The angle between the lower (or) upper horizontal supports and diagonal braces, shall be in the range of 20° to 60° and if possible, this angle preferably be kept at 45°.
- If the height of the box exceeds more than 1400 mm the diagonal braces, shall cross each other and when this dimension exceeds 1800mm additional horizontal supports shall be provided as shown in figure-5 and figure- 6.
- Size of upper and lower horizontal supports and vertical supports, shall be as per Table 4 refer figure 7, 8, 9 & 10 for the arrangement.
- The cross section of end traverses bar (item -1) and thickness of bottom boards (item-2), shall be used as per table - 5.
- All boxes measuring more than 600 mm height shall be constructed by assembling end, side and top shook's on a bottom, forming a complete enclosed Box (refer figure-11).
- Angle iron cleats shall be used for strengthening the joints, as indicated in figure -12.
- Boxes will be strengthened by steel bands to withstand transit damages.

9. Reference drawings

1. SLIDE
2. LONGITUDINAL UNDER SLIDE BOARD.
3. BOTTOM BOARD
4. CARRIER TRAVERSE BAR
5. INTERMEDIATE VERTICAL SUPPO
6. HORIZONTAL BRACING
7. DRAINAGE HOLES
8. BATTEN
9. SLING PLATE
10. NUT BOLT WASHER
11. END TRAVERSE BAR
12. WATER PROOF LINING OF BITUMANISED PAPER
13. VERTICAL SUPPORTS
14. END SHETING BOARD
15. SIDE SHEATING BOARD
16. TOP SHEATING BOARD
17. LONGITUDINAL SUPPORT
18. TOP HORIZONTAL BEAN
19. TOP SHEATING BOARD
20. TOP CORNER STRIPS (FOR STRENGTHENING)
21. OUT SIDE DOCUMENTS CONTAINER.

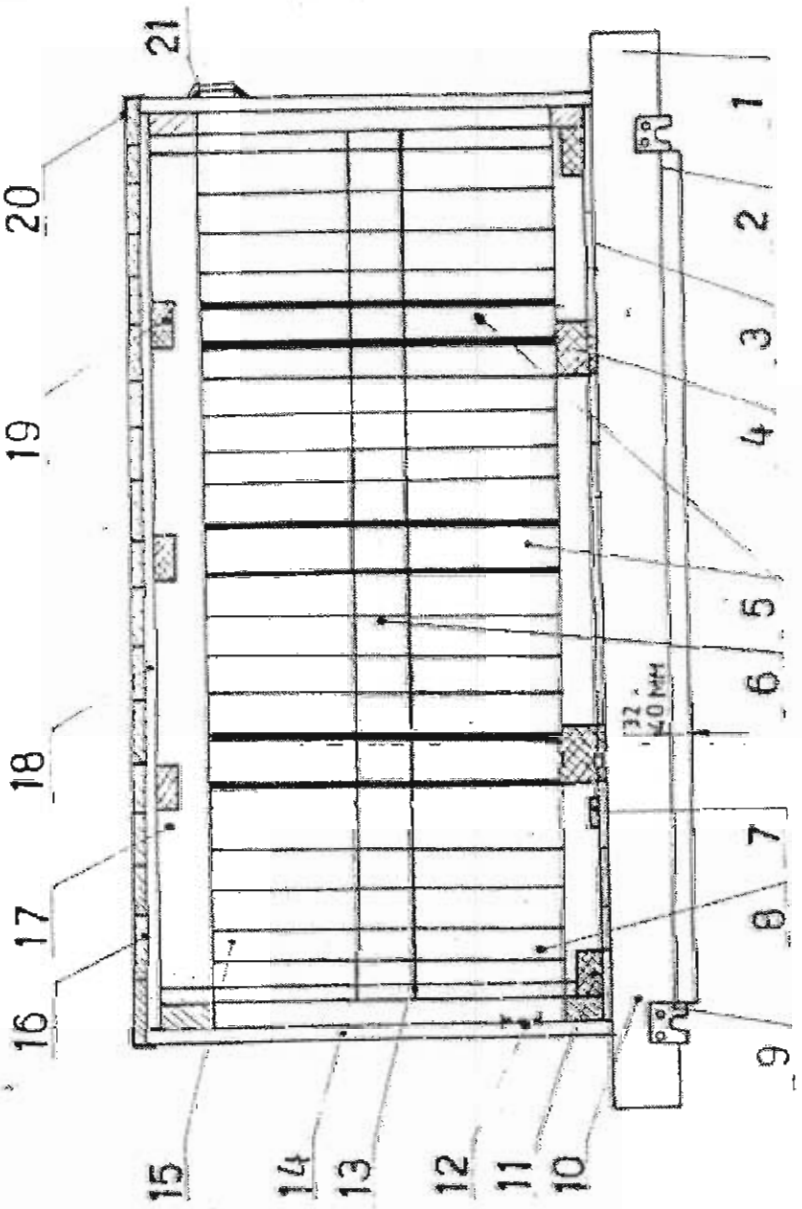

FIG. 1

NOMENCLATURE OF PARTS OF PACKING

BOTTOM FRAME ARRANGEMENTS FOR TYPES

633, 654, 966, 1296, 1122, 1144, 1399, 1577

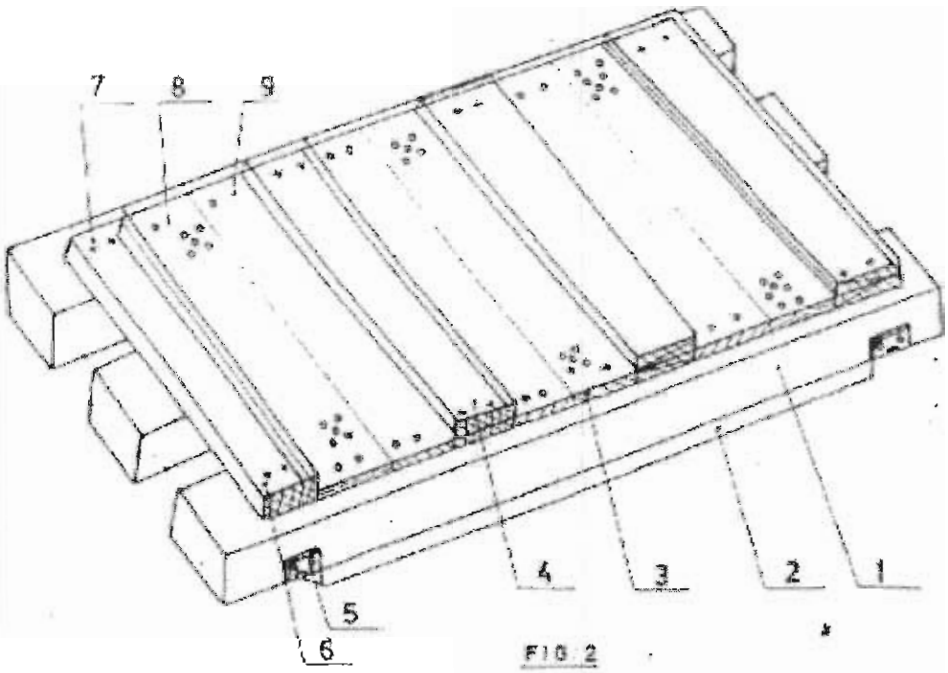

FIG 2

1. SLIDE
2. UNDER SLIDE BOARD
3. BOTTOM BOARD
4. CARRIER TAVERSE BAR
5. SLING PLATE
6. TRAVERSE BAR
7. BOLT, NUT & WASHER
8. DRAINAGE HOLES
9. NAILS

TOP FRAME ARRANGEMENT FOR TYPES

633, 654, 966, 1296, 1122, 1144, 1399 & 1577

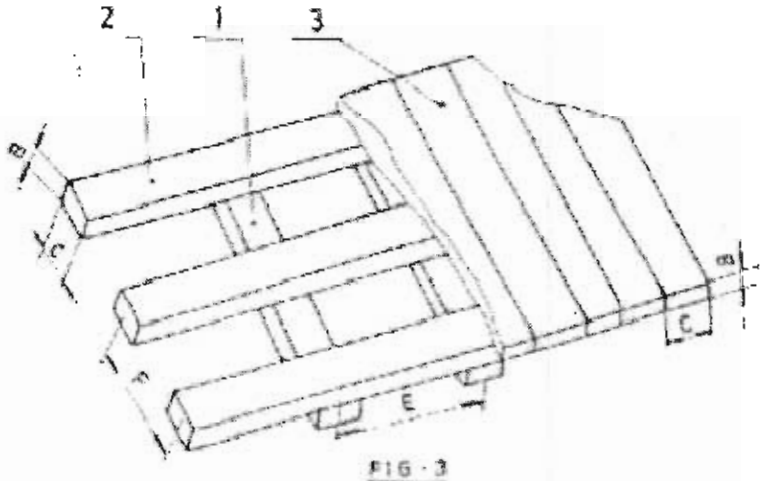

FIG-3

1 - Traverse Bars

2 - Horizontal Sears

3 - Top Board

PROVISION OF DIAGONAL BRACING ARRANGEMENT

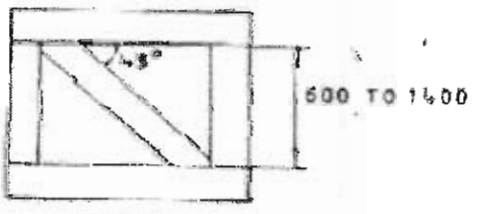

FIG-4

ARRANGEMENT OF DIAGONAL BRACING & HORIZONTAL SUPPORT

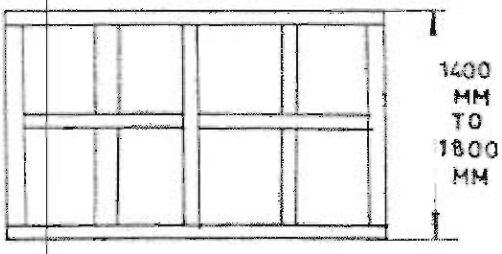

FIG. 5

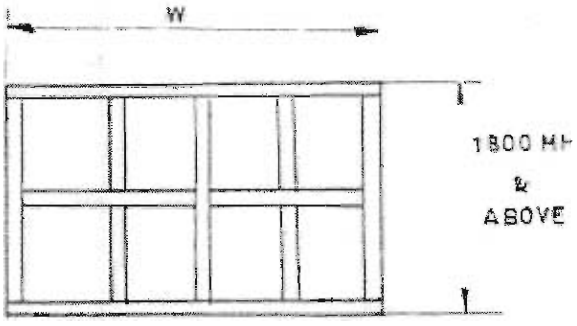

FIG. 6

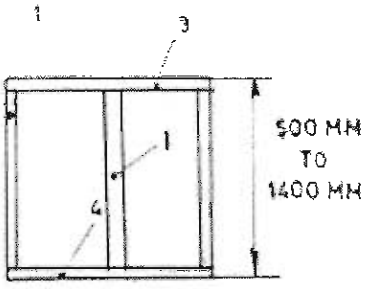

FIG : 7

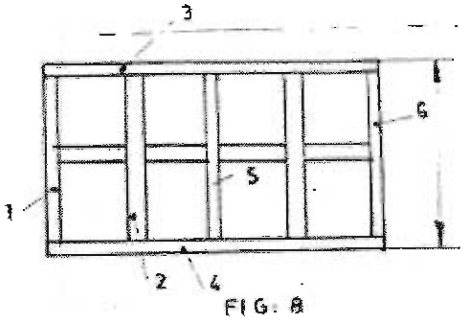

FIG. 8

1. VERTICAL SUPPORT

3. UPPER HORIZONTAL SUPPORT

4. LOWER HORIZONTAL SUPPORT

1,2,5, 6 - VERTICAL SUPPORT

3 - UPPER HORIZONTAL SUPPORT

4 - LOWER HORIZONTAL SUPPORT

ARRANGEMENT OF DIAGONAL BRACING AND HORIZONTAL SUPPORT

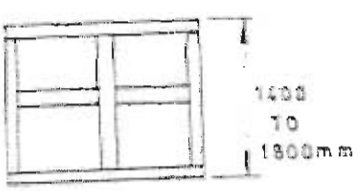

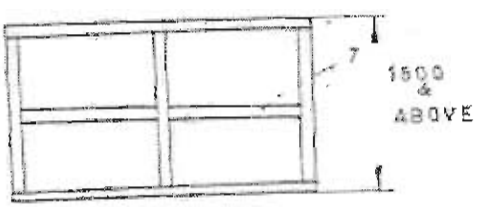

7 – MIDDLE HORIZONTAL SUPPORT

ARRANGEMENT OF PACKING CASE

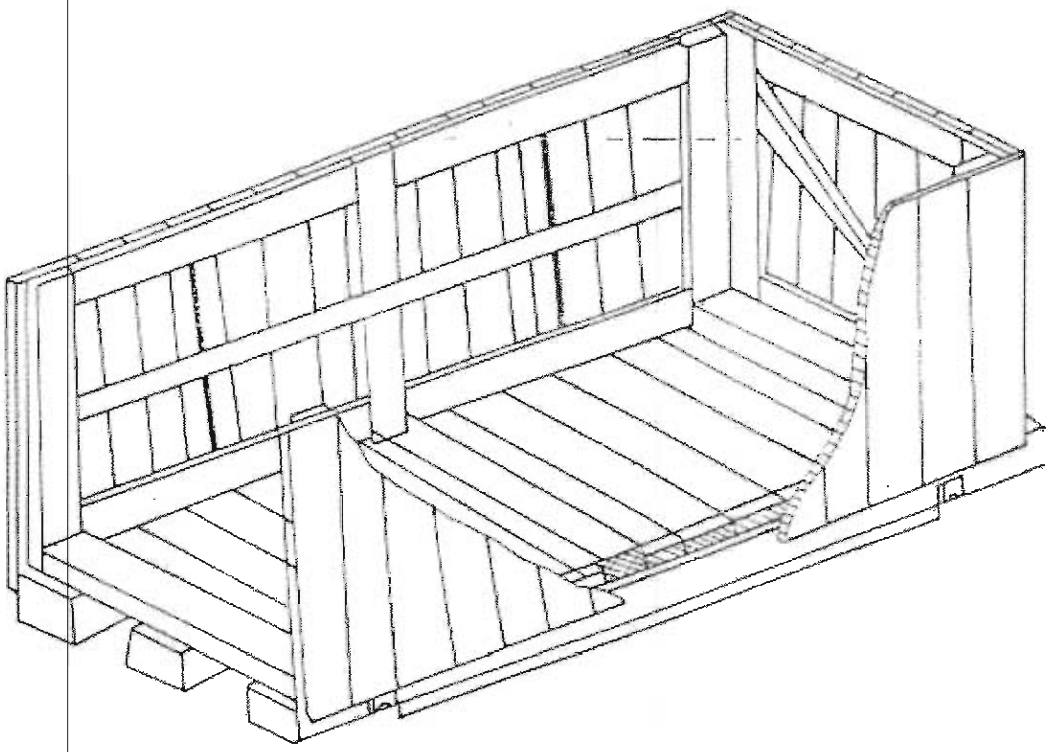

FIG : 11

ARRANGEMENT OF ANGLE IRON CLEATS

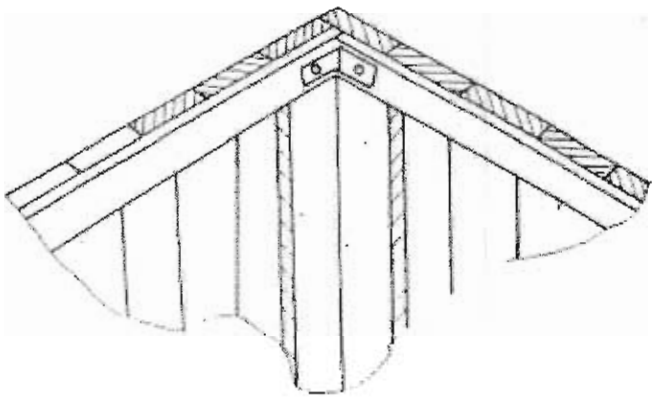

FIG : 12

ARRANGEMENT OF C-CLAMPS AROUND CASES

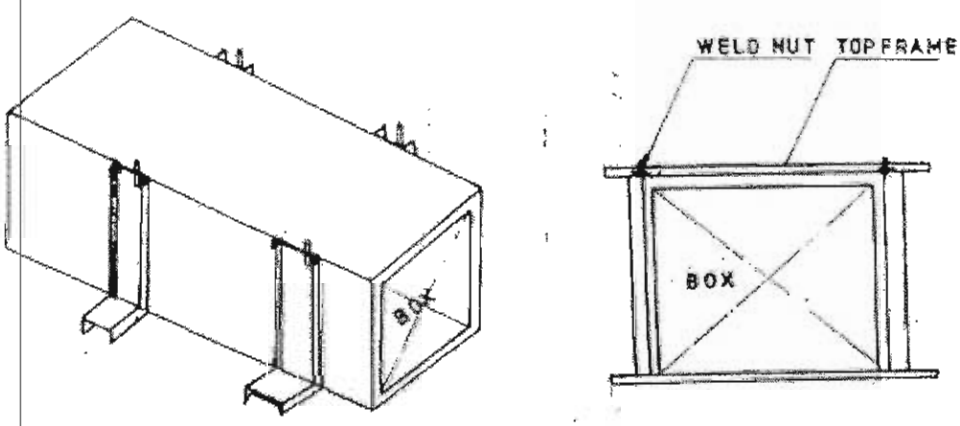

FIG:13

ARRANGEMENT OF SLING - PLATE ON CASES

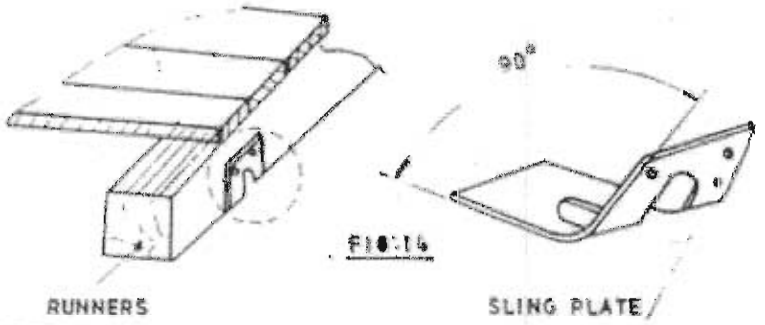

FIG:14

ARRANGEMENT OF SMALL CASES

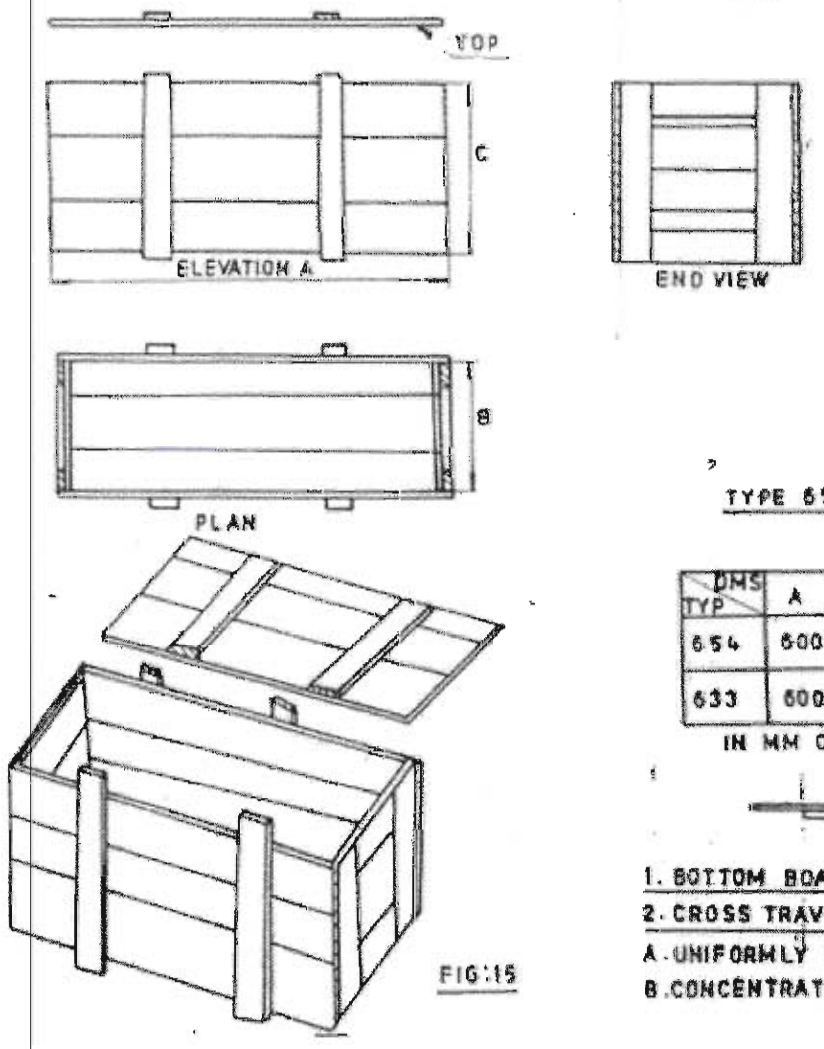

FIG:15

TYPE 654, 633

DMS / TYP	A	B	C
654	600	500	400
633	600	300	300

IN MM ONLY

1. BOTTOM BOARD
2. CROSS TRAVERS BOARD

A - UNIFORMLY DISTRIPUTED
B - CONCENTRATED LOAD

The sizes of boxes given below are indicative. Actual sizes may vary according to size and positioning of component inside.

ANNEXURE – A

WOODEN BOXES

TYPE	L X B X H (MM)	CARRYING CAPATCITY IN KGS
633	600x300x300	200
654	600x500x400	500
966	900x600x600	1000
1296	1200x900x600	2000
1122	100x200x200	300
1144	110x400x400	300
1399	1300x900x900	2500
1577	1500 X 700 X 700	1500

TABLE - 1

No. of slides	Length of slides	Weight in (kgs)	Types of loading
2	600 - 1800 mm	0 - 1000	Two slides for central loading near the ends or uniformly distributes load.
3	1801 - 2500 mm	1001 – 5000	Three slides with load concentrates near the end or uniformly distributed load.

TABLE - 2

LOAD	Length of slides						
	600	800	1000	1200	1300	1500	2000
	CROSS SECTION B x C				b c		
500	30 x 100	30 x 100	30 x 100	30 x 100	30 x 100	30 x 100	30 x 100
800	30 x 100	30 x 100	100 x 100	100 x 100	100 x 100	100 x 100	100 x 100
1000	30 x 100	100 x 100	100 x 100	100 x 100	100 x 100	100 x 100	100 x 100
1500	100 x 100	100 x 100	100 x 100	100 x 100	100 x 100	100 x 100	100 x 100
2000	100 x 100	100 x 100	100 x 100	100 x 100	100 x 100	100 x 100	100 x 100
2500	100 x 100	100 x 100	100 x 100	100 x 100	100 x 100	120 x 150	120 x 150
3000	100 x 100	120 x 150	120 x 150	120 x 150	120 x 150		

TABLE – 3

Distance between top horizontal scans dim 'f'	Distance between the axis of the traverse bar dimension 'E' in fig -3				
	500	600	700	800	900
	Size b x c				
700 – 1000 mm	30 x 100	30 x 100	30 x 100	30 x 100	30 x 100

TABLE-4

End and side panels	Width of the panels	Distance Between Longitudinal Support DIM 'D'						
		600	800	1000	1200	1400	1600	1800
		Cross section (b x c) Item 1 to 7						
Fig - 7	600 to 1200	30 x 100	30 x 100	30 x 100	30 x 130	30 x 130	30 x 130	30 x 130
Fig - 8	1201 to 1600	30 x 130	30 x 130	30 x 130	30 x I30	30 x 130	30 x 130	30 x 130
Fig - 9	1601 to 2000	30 x 130	30 x 130	30 x 130	30 x 130	30 x 130	30 x 130	30 x 130
Fig - 10	2001 to 3000	30 x 130	30 x 130	30 x 130	30 x 130	30 x 130	30 x 130	40 x 150
	3001 to 4000	30 x 130	30 x 130	40 x 150	40 x 150	40 x 150	40 x 150	40 x 150

TABLE-5

BOTTOM TRAVERSE:

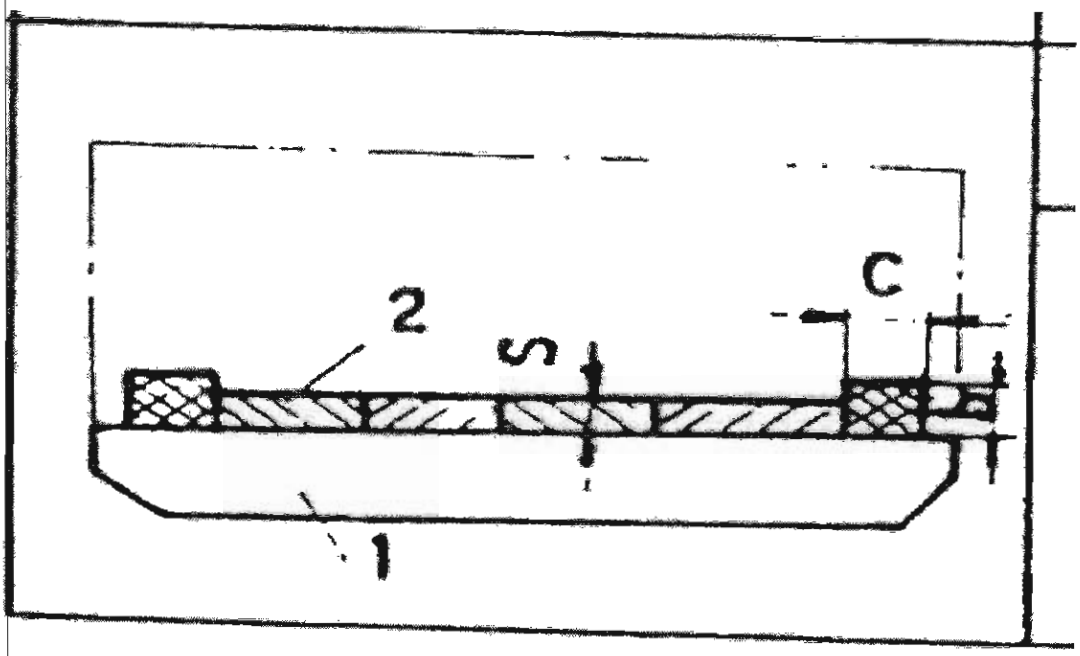

Cross section of end traverse bar item 1 fig. X and thickness of bottom board (item – 2)			
Load in kg	Width of the box	Cross section	S
Up to 3000	Above 1000 mm	100 x 100	25

10. Cautionary symbols

FRAGILE, HANDLE WITH CARE

PROTECT FROM HEAT AND RADIOACTIVE SOURCES

USE NO HOOKS

NOTE. The design of heavy goods packages cannot always resist top lifting by grabhooks.

KEEP DRY

NOTE. Not all cases have waterproof internal liners; plywood used in the construction may not have a waterproof glueline.

THIS WAY UP

NOTE. Certain lengths of small cases make it difficult to distinguish top from bottom.

CENTRE OF GRAVITY

NOTE. This should be stencilled as a minimum on the two longest case sides (this information will normally be supplied by the manufacturer of the item(s) packed).

KEEP AWAY FROM HEAT

STACKING LIMITATION

NOTE. The maximum load in kilograms should be marked above the arrow.

International 'sling here' symbol

11. Packing Reference Table

TABLE-6

No	Packing Method -> / Description	Wooden Crates	Bundles	Saddle supports	HD Polythene Sheet Wrapping	Wooden boxes (Cases)	Spider	Remarks
1	Straight Pipes	✓	✓					Crates for random length
2	Pipes with attachments	✓						
3	Pipes with Fittings	✓						
4	Tanks			✓				
5	Mitre bends			✓		✓		Saddle or cases to be used
6	Fasteners					✓		
7	Hanger components					✓		
8	Clamps					✓		
9	Fittings >nb200/ Flanges					✓		Fittings <200 shall be packed in boxes
10	Plates(Cut to size)					✓		
11	SS Pipes		✓		✓			Wrap SS pipes before bundling
12	SS fittings / Flanges	✓				✓		Fittings <200 shall be packed in boxes
15	SS Fasteners					✓		
16	CW piping(>900mm)						✓	To maintain circularity of pipes
17	CW fittings(>900mm)						✓	
18	CW fittings(<900mm)							
19	Structurals(<200mm)		✓					

12. CHECK LIST

S No	VENDOR TO PROVIDE DETAILS	
1	On despatch of components/items , vendor has to provide the following information for each package of despatched items: 1. Contents of package (Packing list) 2. Corrosion Prevention: Rust-preventive coating /protective painting/Silica gel/ other corrosion inhibitors (please mention) 3. Lifting Instructions: Crane using slings/Fork lift/any other means (please mention) 4. Dimensions (LxBxH) mm: 5. Gross Weight (Kgs): 6. Net Weight (kgs):	
S No	**VENDOR TO CONFIRM**	
1	Where ever items are despatched as a bundle, they should be clamped together with bolted timber block clamps or bolted steel section clamps with timber block inserts. Adequate number of clamps should be provided along the length of the bundle with sufficient projection of the clamps beyond the width and height of the bundle.	
2	Only such materials which can withstand corrosion and environmental conditions are allowed to be packed in wooden crates or bundles.	
3	In case of wooden packing, planks of 20-25 mm thick and 100-150mm wide needs to be suitably placed at close intervals for giving rigidity to packing appropriately.	
4	Wood used for packing should be seasoned & shall be free of termites.	
5	Damages, if any, resulting due to improper/inadequate packing will be to vendors account. It will be the responsibility of the vendor to identify suitable and adequate packing for his supplies to protect it from damage and/or deterioration during storage, stacking, transport and handling.	
6	All packing should be suitable for loading/unloading by cranes/forklifts & suitable for transport by road. Suitable marking should be made on the packing indicating the lifting positions.	

Enquiry 4102100029 dt 28-10-2021- LIST OF ITEMS FOR UNPRICED BID SUBMISSION												
Enq Sl No	Material Code	Description	Project	Proposed delivery Period	Fitting Type	Methrod of construction	Applicable drawing no	Applicable TDC	Applicable Quality Plan	Net qty (Nos)	Quoted / Regretted	Currency of quote
1	925051610000	BW EQT OD33.4X4.55-SA182F92	Patratu Unit-1, 2 & 3 (Qty 2 No.s for each Unit)	6 Months from PO/LOI date- 4 No. 12 Months from PO/LOI date- 2 No.	Tees	Seamless	3-80-452-33625/01	TDG 104 Rev 10	7381QPC20	6.00		
2	925051620000	BW EQT OD33.4X9.09-SA182F92	Patratu Unit-1, 2 & 3 (Qty 5 No.s for each Unit)	6 Months from PO/LOI date- 10 No. 9 Months from PO/LOI date- 5 No.	Tees	Seamless	3-80-452-33624/01	TDG 104 Rev 10	7381QPC20	15.00		
3	925051600000	BW UEQT OD60.3X5.54/OD33.4X4.55 SA182F92	Patratu Unit-1, 2 & 3 (Qty 5 No.s for each Unit)	6 Months from PO/LOI date- 10 No. 9 Months from PO/LOI date- 5 No.	Tees	Seamless	3-80-452-33623/02	TDG 104 Rev 10	7381QPC20	15.00		
4	925051830000	BW EQT ID365X104 SA182F92	Patratu Unit-1, 2 & 3 (Qty 2 No.s for each Unit)	6 Months from PO/LOI date	Tees	Seamless	3-80-300-34676-R00	TDG 104 Rev 10	7381QPC20	6.00		

Note-

1. Evaluation and ordering will be done itemwise.
2. Unit rate to be quoted-
   a. For foreign bidder- 'CFR' Chennai port (all incl. of P&F, inspection charges inclusive of witness/review stages as per QP, freight etc)
   b. For indigenous bidder- 'FOR' BHEL Trichy / Site basis (all incl. of P&F, F&I, inspection charges etc)
3. For foreign bidders, prevailing incidental charges for import purchase (presently @2.75%) and net customs duty (presently @5.5%) will be applicable on the rate quoted.
4. SBI TT Selling rate as on the date of Part I opening will be considered for foreign bidder.

Annexure A – General Terms & Conditions –Enquiry 4102100029 dt 28-10-2021

1. PURCHASE PREFERENCE FOR MAKE IN INDIA

"For this procurement, the local content to categorize a supplier as a Class I local supplier/ Class II local Supplier/ Nonlocal Supplier and purchase preference to Class I local supplier, is as defined in Public Procurement (Preference to Make in India), Order 2017 dated 04.06.2020 issued by DPIIT. In case of subsequent orders issued by the nodal ministry, changing the definition of local content for the items of the NIT, the same shall be applicable even if issued after issue of this NIT, but before finalization of contract / PO / WO against this NIT". In the event of any Nodal Ministry prescribing higher or lower percentage of purchase preference and / or local content in respect of this procurement, same shall be applicable.

'Local content' means the amount of value added in India which shall, unless otherwise prescribed by the Nodal Ministry, be the total value of the Item procured (excluding net domestic indirect taxes) minus the value of imported. Content in the item (including all customs duties) as a proportion of the total value, in percent.
'Class-I local supplier' means a supplier or service provider, whose goods, services or works offered for procurement, has local content equal to or more than 50%, as defined under this Order.
'Class-Il local supplier' means a supplier or service provider, whose goods, services or works offered for procurement, has local content more than 20% but less than 50%, as defined under this Order.
'Non-Local supplier' means a supplier or service provider, whose goods, services or works offered for procurement, has local content less than or equal to 20%, as defined under this Order.

In case item is divisible, following procedure will be followed-

- Among all qualified bids, the lowest bid will be termed as L1. If L1 is 'Class-I local supplier', the contract for full quantity will be awarded to L 1.
- If L1 bid is not a 'Class-I local supplier', 50% of the order quantity' shall be awarded to L1. Thereafter, the lowest bidder among the 'Class-I local supplier' will be invited to match the L1 price for the remaining 50% quantity subject to local supplier's quoted price falling within the margin purchase preference, and contract for that quantity shall be awarded to 'Class-I local supplier' subject to matching the L 1 price. In case such lowest eligible 'Class-I local supplier' fails to match the L1 price or accepts less than the offered quantity, the next higher 'Class-I local supplier' within the margin of purchase preference shall be invited to match the L1 price for remaining quantity and so on, and contract shall be awarded accordingly. In case some Quantity is still left uncovered on Class-I local suppliers, then such balance quantity may also be ordered on the L 1 bidder.

In case item is not divisible, following procedure will be followed-

- Among all qualified bids, the lowest bid will be termed as L1. If L1 is from a 'Class-I local supplier', the contract will be awarded to L1.
- If L1 is not from a local supplier, the lowest bidder among the 'Class-I local supplier', will be invited to match the L1 price subject to 'Class-I local supplier's' quoted price falling within the margin of purchase preference, and the contract shall be awarded to such 'Class-I local supplier' subject to matching the L1 price.
- In case such lowest eligible 'Class-I local supplier' fails to match the L1 price, the 'Class-I local supplier' with the next higher bid within the margin of purchase preference shall be invited to match the L1 price and so on and contract shall be awarded accordingly. In case none of the 'Class-I local supplier' within the margin of purchase preference matches the L1 price, then the contract may be awarded to the L1 bidder.
- Any item wherein the net quantity is less than 2 (i.e. if qty is 1 No.) will be considered as not divisible for the purpose of operating purchase preference.

- The 'Class-I local supplier'/ 'Class-II local supplier' at the time of tender, bidding or solicitation shall be required to provide self-certification on their letter head certified by the authorized signatory of the bidder that the item offered meets the minimum local content and shall give details of the location(s) at which the local value addition is made.
- In cases of procurement for a value in excess of Rs. 10 crores, the local supplier shall be required to provide a certificate from the statutory auditor or cost auditor of the company (in the case of companies) or from a practicing cost accountant or practicing chartered accountant (in respect of suppliers other than companies) giving the percentage of local content.
- False declarations will be in breach of the Code of Integrity under Rule 175(1)(i)(h) of the General Financial Rules for which a bidder or its successors can be debarred for up to two years as per Rule 151 (iii) of the General Financial Rules along with such other actions as may be permissible under law.
- A supplier who has been debarred by any procuring entity for violation of this order shall not be eligible for preference for procurement by any other procuring entity for the duration of the debarment. The debarment for such other procuring entities shall take effect prospectively from the date on which it comes to the notice of other procurement entities, the debarment takes effect prospectively from the date of uploading on the website(s) of The Department of Expenditure, GOI in such a manner that ongoing procurements are not disrupted.
- The onus of submission of appropriately certified documents lies with the bidder and BHEL shall not have any liability to verify the contents and will not be responsible for the same. However, in case BHEL has any reason to doubt the authenticity of the Local Content, BHEL reserves the right to obtain the complete back up calculations before award of contract failing which the bid shall be rejected.
- "Class-II local supplier" will not get purchase Preference in any procurement.
- **Document certifying local content and penal action in case of wrong declaration by suppliers**.

2. REVERSE AUCTION

"*BHEL shall be resorting to Reverse Auction (RA) (Guidelines as available on www.bhel.com) for this tender. RA shall be conducted among all the techno-commercially qualified bidders.*

Price bids of all techno-commercially qualified bidders shall be opened and same shall be considered as initial bids of bidders in RA. In case any bidder(s) do(es) not participate in online Reverse Auction, their sealed envelope price bid along with applicable loading, if any, shall be considered for ranking."

3. PURCHASE PREFERENCE FOR MSE SUPPLIERS.

- Purchase preference for local MSE's quoting in the tender will be 25%.
- Within the 25% reservation for local MSE's, 3% reservation will be applicable for women owned MSE's and 6.25% reservation will be applicable for MSE's owned by SC / ST.
- Payment for MSE Indigenous vendors will be as per MSMED Act, 2006

Document to be submitted as proof of MSE.

MSE suppliers can avail the intended benefits only if they submit ***UDHYAM CERTIFICATE*** along with the offer.
Non submission of documents will lead to consideration of their bid at par with other bidders. No benefit shall be applicable for the Enquiry if any deficiency in the above required documents are not submitted before price bid opening.

However, credentials of all MSE suppliers will be verified before considering the intended benefits for MSE suppliers at the time of tender evaluation.

In case item is not divisible, following procedure will be followed-

- Among all qualified bids, the lowest bid will be termed as L1. If L1 is from a MSE supplier, the contract will be awarded to L1.
- If L1 is not from a MSE supplier, the lowest bidder among the MSE suppliers, will be invited to match the L1 price subject to MSE supplier's quoted price falling within the margin of purchase preference, and the contract shall be awarded to such MSE supplier subject to matching the L1 price.
- In case such lowest eligible MSE supplier fails to match the L1 price, the MSE supplier with the next higher bid within the margin of MSE preference shall be invited to match the L1 price and so on and contract shall be awarded accordingly. In case none of the MSE suppliers within the margin of purchase preference matches the L1 price, then the contract may be awarded to the L1 bidder.
- Any item wherein the net quantity is less than 2 (i.e. if qty is 1 No.) will be considered as not divisible for the purpose of operating purchase preference.

Note: - In case of L1 vendor is having any one of MSE OR Make in India preference, but vendor is falling in MSE/MII price range with both MSE and Make in India preference then quantity will be counteroffered to the vendor who is giving both the preferences.

4. BHEL STANDARD GUARANTEE CLAUSE

The materials are to be guaranteed for satisfactory performance for a period of 24 months from the date of dispatch or 18 months from the date of commissioning / putting into use whichever is earlier and if any defect is noticed during the above period, the same shall be rectified / replaced free of cost on FOR destination basis within a reasonable time, maximum limited to the agreed delivery period. To this effect a guarantee certificate should be sent along with the dispatch documents in the event of an order.

5. Force Majeure

If at any time during the continuance of this contract the performance in whole or part by either party of any obligation under this contract shall be prevented or delayed by reason of war, hostilities ,acts of public enemy, civil commotions, sabotage, fire, flood, explosion, epidemic, quarantine restrictions or acts of God(here in referred to as events), then provided the notice of the happenings of any such event is given by either party to other party within 21(twenty one)days from the date of occurrence thereof, either party shall reason of such event, not be entitled to terminate this contract nor shall either party have any claim for damages against other in respect of such non-performance and delay in performance and delivery under the contract shall be resumed soon as practicable after such event has come to an end or ceased to exist and the decision of the BHEL as to whether the deliveries, have been so resumed or not shall be final and conclusive. If the performance in whole or part of any obligation under the contract is for extension of time shall be granted for periods, considered reasonable by the Vendor to the BHEL subject to prompt notification by the Vendor to the BHEL of the particulars of the events and supply to the BHEL if required of any supporting evidence. Any waiver of time in respect of particular part and thereof shall not be deemed to be a waiver of time in respect of remaining deliveries.

6. **Arbitrations & Conciliation**

Resolution of Disputes:

The Parties agree that if at any time (whether before, during or after the arbitral or judicial proceedings), any Disputes (which term shall mean and include any dispute, difference, question or disagreement arising in connection with construction, meaning, operation, effect, interpretation or breach of the contract/tender which the Parties are unable to settle mutually), arise inter-se the Parties, the same may, be referred by either party to Conciliation to be conducted through Independent Experts Committee to be appointed by competent authority of BHEL from the BHEL Panel of Conciliators.

The proceedings of Conciliation shall broadly be governed by Part-III of the Arbitration and Conciliation Act 1996 or any statutory modification thereof.

Notes:

No serving or a retired employee of BHEL/Administrative Ministry of BHEL shall be included in the BHEL Panel of Conciliators.

Any other person(s) can be appointed as Conciliator(s) who is/are mutually agreeable to both the parties from outside the BHEL Panel of Conciliators.

The proceedings of Conciliation shall broadly be governed by Part-III of the Arbitration and Conciliation Act 1996 or any statutory modification thereof and as provided in Annexure X to this Enquiry Conditions.

The Annexure together with its appendices will be treated as if the same is part and parcel hereof and shall be as effectual as if set out herein in these Enquiry Conditions.

Except as provided elsewhere in this Contract, in case amicable settlement is not reached between the parties, in respect of any dispute or difference; arising out of the formation, breach, termination, validity or execution of the Contract; or, the respective rights and liabilities of the Parties; or, in relation to interpretation of any provision of the Contract ; or , in any manner touching upon the Contract, then, either Party may , by a notice in writing to other Party refer such dispute or difference to sole arbitration of an arbitrator appointed as per the Arbitration and Conciliation Act, 1996 (India) or statutory modification or re-enactment thereof and the rules made thereunder and for the time being in force .

The Arbitrator shall pass a reasoned award and the award of the Arbitrator shall be final and binding upon the parties. Subject as aforesaid, the provision of Arbitration & Conciliation Act 1996 (India) or statutory modification or re-enactment thereof and the rules made thereunder and for the time being in force shall apply to the arbitration proceeding under this clause.

The seat of arbitration shall be Chennai, Tamil Nadu, India. The cost of arbitration shall be borne as per the award of the Arbitrator. Subject to arbitration in terms of clause above, the Courts at Chennai, Tamil Nadu, India shall have exclusive jurisdiction over any matter arising out of or in connection with this Contract.

Notwithstanding the existence or any dispute or difference and/or reference for the arbitration, the vendor shall proceed with and continue without hindrance the performance of its obligation under this Contract with due diligence and expedition in a professional manner except where the Contract has been terminated by either Party in terms of this Contract.

In Case of Contract with Public Sector Enterprise (PSE) or a Government Department, the following shall be applicable:
In the event of any dispute or difference relating to the interpretation and application of the provisions of commercial contract(s) between Central Public Sector Enterprises (CPSEs)/Port Trusts inter se and also between CPSEs and Government Departments/Organizations (Excluding disputes concerning Railways, Income Tax, Customs & Excise Departments, such dispute or difference shall be taken up by either party for resolution through AMRCD as mentioned in DPE OM No. 4(1)/2013 –DPE (GM)/FTS-1835 dated 22-05-2018.

7. Laws Governing the Contract:

a. The contract shall be governed by the Laws of the Government of India in force.
b. Irrespective of the place of execution of the contract, place of delivery, place of payment under the contract, the contract shall be deemed to have been made at the place at which the Acceptance of the tender has been issued.

8. Jurisdiction of the Court

The Courts of the place from where the acceptance of the tender has been issued shall alone have jurisdiction to decide any dispute arising out of or in respect of the contract.

9. Non-Disclosure Agreement (NDA)

The bidders shall enter into the Non-disclosure agreement totally voluntarily, with full knowledge of its meaning and without duress. (Format attached).

10. "**Price to be firm** during the execution of scope of work".

11. **Cartel Formation**:

All the firms should desist from forming cartel as the practice is prohibited under Section 3(3) (a) & (d) of the competition Act 2002.

If any such instance is observed during this tender will attract disciplinary action as per BHEL policies.

12.CANCELLATION / TERMINATION OF CONTRACT, DEFAULT / BREACH OF CONTRACT AND RISK PURCHASE

In case of abnormal delays (beyond the maximum late delivery period as per Penalty clause) in supplies / defective supplies or non-fulfilment of any other terms and conditions given in Purchase Order as enumerated subsequently in this clause, Purchaser shall be entitled to cancel the Order / Contract either in whole or portion thereof without compensation to Seller / Contractor and if the Purchaser so desires, may procure upon such terms and in such manner as deemed appropriate, stores not so delivered or others of similar description where stores exactly complying with particulars are not, in the opinion of the Purchaser, which shall be final, readily procurable, at the risk and cost of the Seller / Contractor and the Seller / Contractor shall be liable to the Purchaser for any excess costs provided that the Seller / Contractor shall continue the performance of the Order / Contract to the extent not cancelled under the provisions of

this clause. The Seller / Contractor shall on no account be entitled to any gain on such repurchases. If bidder does not agree to the above Risk Purchase Clause, BHEL reserves the right to reject the offer.

Risk & Cost Clause, in line with Conditions of Contract may be invoked in any of the following cases:

a. Contractor / supplier's poor progress of the work vis-à-vis execution timeline as stipulated in the Contract, backlog attributable to contractor/ supplier including unexecuted portion of work / supply does not appear to be executable within balance available period (#) considering its performance of execution.
b. Withdrawal from or abandonment of the work by contractor before completion of the work as per contract.
c. Non completion of work / Non-supply by the Contractor / supplier within scheduled completion / delivery period as per Contract or as extended from time to time, for the reasons attributable to the contractor / supplier.
d. Termination of Contract on account of any other reason (s) attributable to Contractor / Supplier.
e. Assignment, transfer, subletting of Contract without BHEL's written permission resulting in termination of Contract or part thereof by BHEL.
f. Non-compliance to any contractual condition or any other default attributable to Contractor / Supplier.

Risk and Cost amount against Balance Work

Risk & Cost Amount= **[(A-B) + (A x H/100)]**

Where,

A= Value of Balance scope of Work / Supply (*) as per rates of new contract

B= Value of Balance scope of Work / Supply (*) as per rates of old contract being paid to the contractor / supplier at the time of termination of contract i.e. inclusive of PVC & ORC, if any.

H= Overhead Factor to be taken as 5

In case (A-B) is less than 0 (zero), value of (A-B) shall be taken as 0 (zero).

***(Balance scope of work / supply)**

Difference of Contract Quantities and Executed Quantities as on the date of issue of Letter for 'Termination of Contract', shall be taken as balance scope of Work / Supply for calculating risk & cost amount.

Contract quantities are the quantities as per original contract. If, Contract has been amended, quantities as per amended Contract shall be considered as Contract Quantities.

Items for which total quantities to be executed have exceeded the Contract Quantities based on drawings issued to contractor from time to time till issue of Termination letter, then for these items total Quantities as per issued drawings would be deemed to be contract quantities.

Substitute / extra items whose rates have already been approved would form part of contract quantities for this purpose. Substitute / extra items which have been executed but rates have not been approved, would also form part of contract quantities for this purpose and rates of such items shall be determined in line with contractual provisions.

However, increase in quantities on account of additional scope in new tender shall not be considered for this purpose.

Note: In case portion of work is being withdrawn, contract quantities pertaining to portion of work withdrawn shall be considered as 'Balance scope of work / supply' for calculating Risk & Cost amount.

LD against delay in executed work / supply in case of Termination of Contract in case of Risk and Cost Option

LD against delay in executed work / supply shall be calculated in line with LD clause of the contract for the delay attributable to contractor / supplier. For limiting maximum LD value, contract value shall be taken as Executed Value of work / supply.

Method for calculation of "LD against delay in executed work / supply" is given below.

a. Let the time period from scheduled date of start of work till termination of contract excluding the period of Hold (if any) not attributable to contractor / supplier= T1
b. Let the value of executed work / supply till the time of termination of contract= X
c. Let the Total Executable Value of work / supply for which inputs / fronts were made available to contractor / supplier and were planned for execution till termination of contract= Y
d. Delay in executed work / supply attributable to contractor/supplier i.e. T2= (1- X/Y) * T1
e. LD shall be calculated in line with LD clause of the Contract for the delay attributable to contractor / supplier taking "X" as Contract Value and "T2" as delay attributable to contractor / supplier.

Note: In case portion of work / supply is withdrawn, no LD shall be applicable for portion of work / supply withdrawn.

Recovery from Supplier

Recoveries from contractor / supplier on whom risk & cost has been invoked shall be made from the following:

a. Dues available in the form of Bills payable to contractor / supplier, SD, BG's against the same contract.
b. Dues payable to contractor / supplier against other contracts in the same Region / Unit / Division of BHEL.
c. Dues payable to contractor / supplier against other contracts in the different Region / Unit / division of BHEL.
d. Legal Options for recovery of dues payable by the supplier / contractor.

13.SUSPENSION OF BUSINESS DEALING

In order to protect the commercial interests of BHEL, it becomes necessary to take action against suppliers / contractors by way of suspension of business dealings, who either fail to perform or are in default without any reasonable cause, cause loss of business / money / reputation, indulge in malpractices, cheating, bribery, fraud or any other misconduct or formation of cartels so as to influence the bidding process or influence the price etc. Suspension of Business Dealings could be in the form of "Hold" or "Banning" a supplier / contractor or a bidder or an applicant for registration as a registered supplier. For this purpose, the abridged version of guidelines hoisted at website http://www.bhel.com/vender_registration/vender.php (Suspension of business dealings with suppliers / contractors) is being followed across all BHEL units. Vendors shall keep themselves aware of these guidelines before submission of their bid.

14.FRAUD PREVENTION POLICY

The Bidder along with their associates / collaborators / sub-contractors / sub-vendors / consultants / service providers shall strictly adhere to BHEL fraud prevention policy displayed on BHEL website at www.bhel.com/pdf/BHEL Fraud Prevention Policy.pdf and shall immediately bring to the notice of BHEL management about any fraud or suspected fraud as soon as it comes to their notice.

15.FORWARDING OF TEST CERTIFICATES & INSPECTION REPORTS

Test certificates (TC) along with Inspection Reports (IR) as called for in the TDC (Three ink signed originals) / approved Quality Plan shall be sent to Manager / Purchase (Fittings), BHEL Piping Centre immediately after the shipment / dispatch of items. Forthcoming section may please be refereed for detailed list of documents to be submitted to respective agencies in BHEL.

TC & IR shall be furnished for each batch of shipment / dispatch. If entire PO quantity is manufactured in one lot but dispatched in phased manner, original "IBR Form" should be submitted with the first consignment. For subsequent consignments, attested Xerox copy of IBR along with copies of TC and IR indicating invoice detail against which original TC and IR was handed over to BHEL shall be submitted. Soft copies of the all the test certificates shall also be submitted through email.
Year of code for the technical standards shall be latest and the specific year shall be indicated in the MTC's as well as applicable IBR Forms.

Additionally foreign vendors shall indicate the item description as "Boiler Components- Fittings" in all the dispatch documents like Bill of Lading, Invoice, Packing list, Country of origin certificate etc. Vendor shall negotiate the documents with bank only "For the net shipment value" (ie. invoice value excluding the LD value).

16.PAYMENT DOCUMENTS

In case of indigenous vendors

Payment shall be made against submission of the following documents-

a. Original GST compliant invoice and 2 copies of the same.
b. Original site acknowledged Lorry Receipt (Goods Receipt (GR) date for in case of BHEL Trichy stores).
c. Original inspection report and all original documents as called for in TDC / approved QP.

If one original certificate / LR is applicable for more than one invoice quantity / invoice, Xerox copy is acceptable with original correlation details on the Xerox copy with attestation by suppliers Quality in charge.
GST compliance-

a. Response to Tenders for Indigenous supplier will be entertained only if the vendor has a valid GST registration No (GSTIN) which should be clearly mentioned in the offer. If the dealer is exempted from GST registration, a declaration with due supporting documents need to be furnished for considering the offer. Dealers under composition scheme should declare that he is a composition dealer supported by the screen shot taken from GST portal. The dealer has to submit necessary documents if there is any change in status under GST.
b. Supplier shall mention their GSTIN in all their invoices (incl. credit Notes, Debit Notes) and invoices shall be in the format as specified/prescribed under GST laws. Invoices shall necessarily contain Invoice number (in case of multiple numbering system is being followed for billing like SAP invoice no, commercial invoice no etc., then the Invoice No. which is linked/uploaded in GSTN network shall be clearly indicated), Billed to party (with GSTIN) & Shipped to party details, item description as per PO, Quantity, Rate, Value, applicable taxes with nomenclature (like IGST, SGST, CGST & UTGST) separately, HSN/ SAC Code, Place of Supply etc.

c. All invoices shall bear the HSN Code for each item separately (Harmonized System of Nomenclature)/ SAC code (Services Accounting Code).

d. Invoices will be processed only upon completion of statutory requirement and further subject to following:
   - Vendor declaring such invoice in Form GST ANX-1
   - Receipt of Goods or Services and Tax invoice by BHEL

e. As the continuous uploading of tax invoices in GSTN portal (in GST ANX-1) is available for all (i.e. both Small & Large) tax payers under proposed new GST Return System, all invoices raised on BHEL may be uploaded

immediately in GST portal on dispatch of material /rendering of services. The supplier shall ensure availability of Invoice in GST portal before submission of invoice to BHEL. Invoices will be admitted by BHEL only if the invoices are available in GSTN portal (in BHEL's GST ANX-2).

f. In case of discrepancy in the data uploaded by the supplier in the GSTN portal or in case of any shortages or rejection in the supply, then BHEL will not be able to avail the tax credit and will notify the supplier of the same. Supplier has to rectify the data discrepancy in the GSTN portal or issue credit note or debit note (details also to be uploaded in GSTN portal) for the shortages or rejections in the supplies or additional claims, within the calendar month informed by BHEL.

g. In cases where invoice details have been uploaded by the vendor but failed to remit the GST amount to GST Department (Form PMT-08 or Form GST RET-01 to be submitted) within stipulated time, then GST paid on the invoices pertaining to the month for which GST return not filed by the vendor will be recovered from the vendor along with the applicable interest(currently 24% p.a) and all subsequent bills of the vendor will not be processed till filing of the GST return by the vendor

h. In case GST credit is denied to BHEL due to non-receipt or delayed receipt of goods and/ or tax invoice or expiry of timeline prescribed in GST law for availing such ITC, or any other reasons not attributable to BHEL, GST amount claimed in the invoice shall be disallowed to the vendor.

i. Where any GST liability arising on BHEL under Reverse Charge (RCM), the vendor has to submit the invoices to BHEL well within the timeline prescribed in GST Law, to enable BHEL to discharge the GST liability. If there is a delay in submission of invoice by the vendor resulting in delayed payment of GST by BHEL along with Interest, then such Interest payable or paid shall be recovered from the vendor.

j. Under GST regime, BHEL has to discharge GST liability on LD recovered from suppliers/contracts. Hence applicable GST shall also be recoverable from suppliers/contractors on LD amount. For this Tax Invoice will be issued by BHEL indicating the respective supply invoice number.

k. GST TDS will be deducted as per Section 51 of CGST Act 2017 and in line with Notification 50/2018 – Central Tax dated 13.09.2018. GST TDS certificate which will be generated in GST portal subsequent to vendor accepting the TDS deduction in the GST portal, will be issued to the vendor.

In case of foreign vendors

Payment shall be made against presentation of the following documents thru bank-

a. Original Bill of Lading (BL).
b. Original Invoice.
c. Packing List.
d. Country of origin certificate.

The following documents shall be forwarded to DGM / Purchase directly-

a. Original inspection report.
b. Original test certificates.
c. Guarantee certificate.

17.FORWARDING OF DISPATCH DOCUMENTS (APPLICABLE FOR FOREIGN VENDORS)

Dispatch documents and Test Certificates shall be forwarded as indicated below (details indicated are as applicable as on date and any revision to the same shall be communicated along with PO)-

1. BHEL Regional Operating Division (ROD)-

Copy of Invoice, Bill of Lading, Packing List, Country of origin certificate, Test Certificate (selected documents namely TPI covering letter, IBR Form IIIC and MTC only) to be mailed to the following persons in BHEL ROD for material clearance at Chennai Port-

1. R.B.Maheshwari, Deputy Manager/ROD Chennai / Phone no – 044 24589844 /rbmaha@bhel.in
2. S P Velmurugan, Dy. Engineer /BHEL, ROD(MS) /044-24589845/ vels@bhel.in
3. A Srinivasalu / 04424374329/ asvasalu@bhel.in

Mail copy mail shall also be sent to the following persons in Piping Centre.

a. Mr Indrajit Biswas – ibiswas@bhelin
b. Mrs Priya Balaji – pb@bhel.in
c. Mr V Sundaram – vsundaram@bhel.in
d. Mrs M Ramya – mramya@bhel.in

Copy of above referred dispatch documents shall also be sent to R.B.Maheshwari, BHEL ROD thru courier. The address of ROD division will be in BHEL Purchase Order.

All dispatch documents including BL shall be signed by competent authorities.

2. BHEL Piping Centre-

Copy of Invoice, Bill of Lading, Packing List, Country of origin certificate, Credit note for LD value (if LD is applicable) shall be mailed to the following persons at BHEL Piping Centre, Chennai-

a. Mr Indrajit Biswas – ibiswas@bhelin
b. Mrs Priya Balaji – pb@bhel.in
c. Mr V Sundaram – vsundaram@bhel.in

Copies of Invoice, Bill of Lading, Packing List, Country of origin certificate, Credit note for LD value (if LD is applicable) along with one complete set of Original Test Certificates along with one copy shall be sent thru courier to Mr Indrajit Biswas, Manager / Purchase, Piping Centre, Chennai.

Scanned copies of complete set of Test Certificates (TPI covering letter, IBR Form IIIC, MTC and all Inspection reports as called for in BHEL TDC / approved QP) shall be mailed to-

a. Mr Indrajit Biswas – ibiswas@bhelin
b. Mrs Priya Balaji – pb@bhel.in
c. Mr V Sundaram – vsundaram@bhel.in

3. Bank-

Three sets of original Invoice & Packing list, one set of original Bill of Lading and Country of origin certificate, Credit note for LD value (if LD is applicable) along with one complete set of Test Certificate shall be forwarded thru Bank. The documents shall be negotiated with Bank only for the 'Net shipment value'. Net Shipment Value = Invoice value – LD value.

18.BILL OF ENTRY FILING (APPLICABLE FOR FOREIGN VENDORS)

Indian Customs has imposed a penalty on late filing of Bill of Entries (Air / Sea Shipments) by the importer @ INR 5,000/- per day (for Initial 03 days) & INR 10,000/- per day (thereafter). The maximum free time allowed for filing Bill of Entry is 24 hrs from the time of arrival of cargo at final port of discharge. The amount indicated is as prevailing on date. The actual penalty amount as prevailing on the date clearance shall be levied on the vendor if applicable.

The vendor should furnish the Non-Negotiable Documents (Air Way Bill / Bill of Lading, Error free Commercial Invoice, Packing List, Certificate of Origin) by mail and by post / courier to BHEL well in advance (ie. minimum 5 days prior to landing in case of sea and 2 days prior to landing in case of Air) at final port of discharge.

Vendor will be held responsible for the penalty arising against the late filing of Bill of entry due to-

a. Non-availability of Non-Negotiable Documents (NND's) before the cargo arrival
b. Discrepancy in documents
c. Short landing of consignments (For shipments on CFR Chennai Port)

For all shipments for the contracts (PO's) finalized on CFR Chennai Port basis-

a. Delivery Orders involving multiple agencies like liners / freight forwarders are not allowed. There must be a single agency office at the final discharge Port (Chennai) for issuing the Delivery Order to BHEL.
b. Detention / demurrage charges arising due to the delay in collection of Delivery Orders from multiple agencies of liner / freight forwarder also whose offices are not at available Chennai, the same amount will be deducted from vendor's bills only.
c. Bill of Lading should clearly endorse the detention free period and the same should be honoured by the freight forwarder and liner. Detention / demurrage if any due to non-acceptance of detention free period indicated in bill of lading will be to vendors account only.

Apart from the normal charges like Terminal Handling Charges, Container cleaning Charges, Delivery Order Charges at final port of discharge, other charges* indicated in delivery order will not be borne by BHEL. The liner / freight forwarders should be properly communicated by the vendor not to claim such charges for issuing Delivery Order. If the liner / freight forwarder claims such charges in their invoices, the same amount will be deducted from the vendor bills without any prior intimation in order to avoid the delay in Customs clearance.

*The likely additional / hidden costs or other charges (not payable by BHEL) as indicated above are-

a. CIC - Container Imbalance Charges / Surcharges
b. EIC - Equipment Imbalance Charge / Surcharges
c. CAF - Container / Currency Adjustment Factor
d. BAF - Bunker adjustment Factor
e. RDS - Rupee Depreciation Surcharge
f. CDS - Currency Depreciation Surcharge
g. ISPS - International Ship and Port Facility Security charges
h. OHS - Origin handling Charges
i. Port Congestion Charges
j. Interim surcharge
k. Chennai Trade charge

Declaration to be issued on Company letter head

In line with Government Public Procurement Order (Preference to Make in India) Order (PPP-MII Order), 2017 vide No. P-45021/2/2017-PP (BE-II) dated 04.06.2020, issued by DPIIT, Ministry of Commerce and Industry, we hereby certify that we, ……. (Supplier name) are

a) 'Class-I local supplier' meeting requirement of local content equal to or more than 50%,
b) 'Class-II local supplier' meeting requirement of local content more than 20% but less than 50%,
c) "Non-Local Supplier" meeting requirement of local content less than or equal to 20%.

(Strike off whichever is not applicable)

As defined under above referred Order for the following Enquiry Item Sl Nos of BHEL Enquiry No 4102100029 dt 28.10.2021.

- Enquiry Item No./(s) -

Details of location at which local value addition will be made is as follows:

…….

…….

By issuing this declaration, we understand and are in acceptance to the following-

- False declarations will be in breach of the Code of Integrity under Rule 175(1)(i)(h) of the General Financial Rules for which a bidder or its successors can be debarred for up to two years as per Rule 151 (iii) of the General Financial Rules along with such other actions as may be permissible under law.
- In case of debarment by any procuring entity for violation of the provisions of the Public Procurement (Preference to Make in India), Order 2017 we shall not be eligible for preference for procurement by any other procuring entity for the duration of the debarment. The debarment for such other procuring entities shall take effect prospectively from the date on which it comes to the notice of other procurement entities, the debarment takes effect prospectively from the date of uploading on the website(s) of The Department of Expenditure, GOI in such a manner that ongoing procurements are not disrupted.
- We undertake the onus of responsibility of submission of appropriately certified documents. We understand that BHEL is not at liability to verify the contents and will not be responsible for the declaration made by us. However, in case BHEL has any reason to doubt the authenticity of the local content, BHEL reserves the right to obtain the complete back up calculations before award of contract and we are liable to submit the same if requested by BHEL. We also understand that our bid is liable for rejection in case we fail to submit the details as requested by BHEL.

Seal and Signature of authorized signatory

Special Note-

In cases of procurement for a value in excess of Rs. 10 crores, the local supplier shall be required to provide a certificate from the statutory auditor or cost auditor of the company (in the case of companies) or from a practicing cost accountant or practicing chartered accountant (in respect of suppliers other than companies) giving the percentage of local content.

FIRST ANGLE PROJECTION(ALL DIMENSIONS IN MILLIMETRES)

CAUTION THE INFORMATION ON THIS DOCUMENT IS THE PROPERTY OF BHARAT HEAVY ELECTRICALS LIMITED. IT MUST NOT BE USED DIRECTLY OR INDIRECTLY IN ANY WAY DETRIMENTAL TO THE INTEREST OF THE COMPANY

DRAWING No 3-80-452-33625

12.5

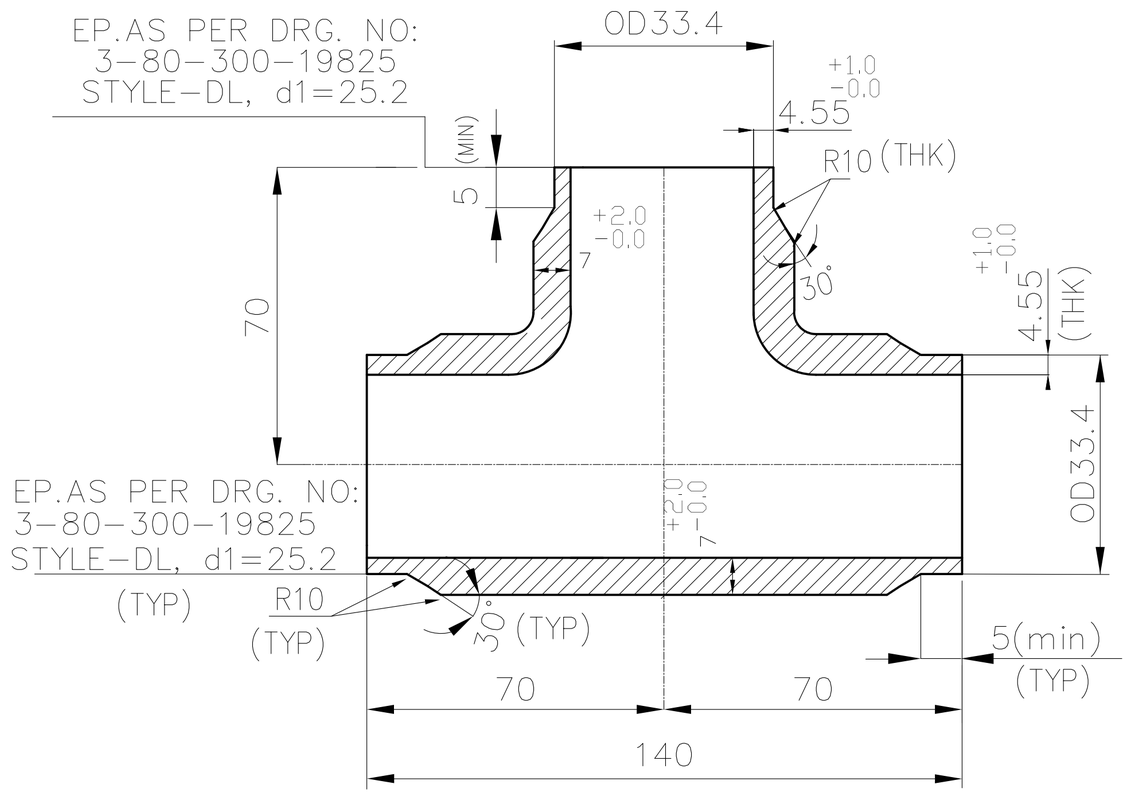

NOTES :-

01. DESIGN PRESSURE : 68.8 kg/sq.cm.(g)
02. DESIGN TEMPERATURE : 608° C
03. ALL DIMENSIONS ARE FINISHED DIMENSIONS.
04. MANUFACTURING, INSPECTION AND TESTING SHALL BE AS PER IBR, ASME B16.9 AND SA182
05. FITTING TO COMPLY WITH ASME B16.9 AND DIMENSIONS ARE AS PER THIS DRAWING.
06. FOLLOW TDG:104 (LATEST VERSION)
07. WEIGHT GIVEN IN BOM IS INDICATIVE ONLY.

    VENDOR SHALL SUBMIT FINAL DRG WITH DIMENSIONS & ACTUAL WEIGHT FOR APPROVAL BEFORE MANUFACTURING.
08. CONSTRUCTION SHALL BE SEAMLESS

ITEM NO.	DESCRIPTION	DRAWING NO.	ITEM NO. / VAR NO.	MATERIAL CODE / MATERIAL SPEC.	A / C	UNIT WT. / QTY.
01	BW EQUAL TEE OD33.4X4.55	3-80-452-33625		92 505 161 0000 / SA 182 F92	A	1,170 / 1

TYPE OF PRODUCT OR NAME OF CUSTOMER/PROJECT

BHARAT HEAVY ELECTRICALS LTD., PIPING CENTRE, CHENNAI 600 017

	NAME	SIGN	DATE	NO OF ITEMS
DRN	P SURESH		15.05.17	
CHD	R SESHAGIRI		15.05.17	
APPD	R SESHAGIRI		15.05.17	

REV	DATE	ALTD :	REV	DATE	ALTD : P SURESH
02		APPD :	01	01.08.17	APPD : R SESHAGIRI

NOTE NOS. 01,04 MODIFIED

REVISIONS ARE INDICATED AS 01

DEPT.	GRADE OF UN TOL. DIM	SCALE	WEIGHT (Kg).	BHEL PO REF.NO:	ITEM No.
CODE	C/M/F	N.T.S.			

TITLE: **BW EQUAL TEE** (OD33.4X4.55-SA182F92)

CARD CODE: U 01

DRAWING No. **3-80-452-33625**

REV **01**

SIZE A3

FIRST ANGLE PROJECTION(ALL DIMENSIONS IN MILLIMETRES)

CAUTION THE INFORMATION ON THIS DOCUMENT IS THE PROPERTY OF BHARAT HEAVY ELECTRICALS LIMITED. IT MUST NOT BE USED DIRECTLY OR INDIRECTLY IN ANY WAY DETRIMENTAL TO THE INTEREST OF THE COMPANY

DRAWING No 3-80-452-33624

12.5

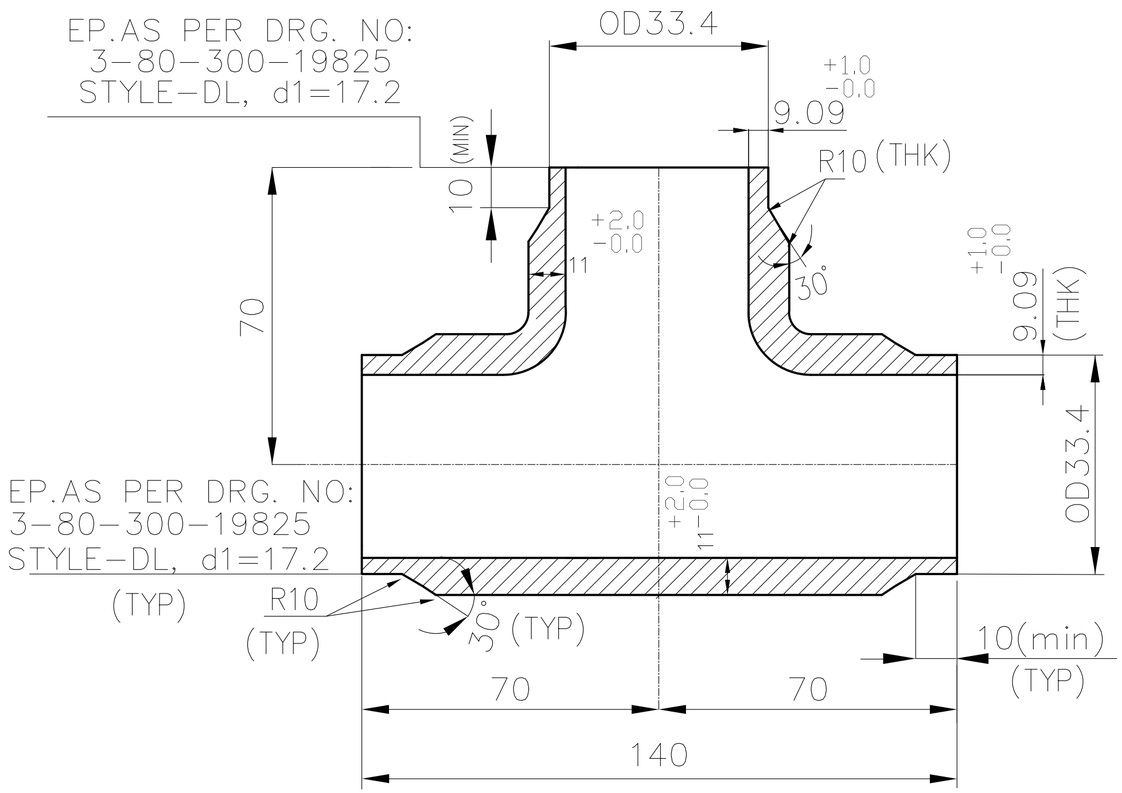

NOTES :-

01. DESIGN PRESSURE : 297 kg/sq.cm.(g)
02. DESIGN TEMPERATURE : 608° C
03. ALL DIMENSIONS ARE FINISHED DIMENSIONS.
04. (01) MANUFACTURING, INSPECTION AND TESTING SHALL BE AS PER IBR, ASME B16.9 AND SA182
05. FITTING TO COMPLY WITH ASME B16.9 AND DIMENSIONS ARE AS PER THIS DRAWING.
06. FOLLOW TDG:104 (LATEST VERSION)
07. WEIGHT GIVEN IN BOM IS INDICATIVE ONLY. VENDOR SHALL SUBMIT FINAL DRG WITH DIMENSIONS & ACTUAL WEIGHT FOR APPROVAL BEFORE MANUFACTURING.
08. CONSTRUCTION SHALL BE SEAMLESS

ITEM NO.	DESCRIPTION	DRAWING NO.	ITEM NO. / VAR NO.	MATERIAL CODE / MATERIAL SPEC.	A / C	UNIT WT. / QTY.
01	BW EQUAL TEE OD33.4X9.09	3-80-452-33624		92 505 162 0000 / SA 182 F92	A	1,430 / 1

TYPE OF PRODUCT OR NAME OF CUSTOMER/PROJECT

BHARAT HEAVY ELECTRICALS LTD., PIPING CENTRE, CHENNAI 600 017

	NAME	SIGN	DATE	NO OF ITEMS
DRN	P SURESH		15.05.17	
CHD	R SESHAGIRI		15.05.17	
APPD	R SESHAGIRI		15.05.17	

DEPT.	GRADE OF UN TOL. DIM	SCALE	WEIGHT (Kg).	BHEL PO REF.NO:	ITEM No.
CODE	C/M/F	N.T.S.			

TITLE: BW EQUAL TEE (OD33.4X9.09-SA182F92)

CARD CODE: U 01

DRAWING No. 3-80-452-33624

REV 01

REV	DATE	ALTD :	REV	DATE	ALTD : P SURESH
02		APPD :	01	17.08.17	APPD : R SESHAGIRI

NOTE NO. 04 MODIFIED

REVISIONS ARE INDICATED AS (01)

SIZE A3

FIRST ANGLE PROJECTION(ALL DIMENSIONS IN MILLIMETRES)

CAUTION THE INFORMATION ON THIS DOCUMENT IS THE PROPERTY OF BHARAT HEAVY ELECTRICALS LIMITED. IT MUST NOT BE USED DIRECTLY OR INDIRECTLY IN ANY WAY DETRIMENTAL TO THE INTEREST OF THE COMPANY

DRAWING No 3-80-452-33623

12.5

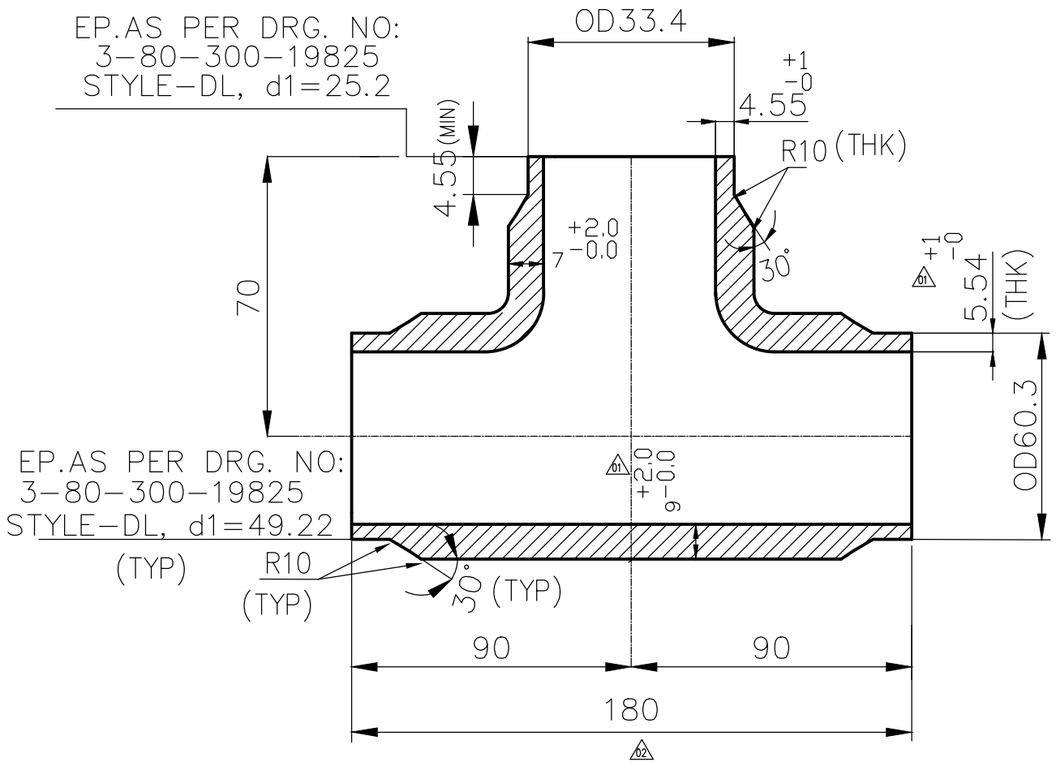

NOTES :-

01. DESIGN PRESSURE : 68.8 kg/sq.cm.(g)
02. DESIGN TEMPERATURE : 608° C
03. ALL DIMENSIONS ARE FINISHED DIMENSIONS.
04. MANUFACTURING, INSPECTION AND TESTING SHALL BE AS PER IBR, ASME B16.9 AND SA182
05. FITTING TO COMPLY WITH ASME B16.9 AND DIMENSIONS ARE AS PER THIS DRAWING.
06. FOLLOW TDG:104 (LATEST VERSION)
07. WEIGHT GIVEN IN TITLE BLOCK IS INDICATIVE ONLY. ACTUAL WEIGHT TO BE FURNISHED BY FITTING SUPPLIER.
08. CONSTRUCTION SHALL BE SEAMLESS

ITEM NO.	DESCRIPTION	DRAWING NO.	ITEM NO. / VAR NO.	MATERIAL CODE / MATERIAL SPEC.	A / C	UNIT WT. / QTY.
01	BW UNEQUAL TEE 0D60.3X5.54/0D33.4X4.55	3-80-452-33623		92 505 160 0000 / SA 182 F92	A	1.652 / 1

TYPE OF PRODUCT OR NAME OF CUSTOMER/PROJECT

BHARAT HEAVY ELECTRICALS LTD., PIPING CENTRE, CHENNAI 600 017

	NAME	SIGN	DATE	NO OF ITEMS
DRN	P SURESH		21.04.17	
CHD	R SESHAGIRI		21.04.17	
APPD	R SESHAGIRI		21.04.17	

DEPT.	GRADE OF UN TOL. DIM	SCALE	WEIGHT (Kg).	BHEL PO REF.NO:	ITEM No.
CODE	C/M/F	N.T.S.	~1.652		

TITLE: BW UNEQUAL TEE 0D60.3X5.54/0D33.4X4.55-SA182F92)

CARD CODE: U 01

DRAWING No. 3-80-452-33623

REV 02

REV	DATE	ALTD :	APPD :	REVISIONS
02	11.02.21	RAVI KUMAR	TRINADHA RAO	LENGTH CORRECTED — REVISIONS ARE INDICATED AS 02
01	04.05.18	P SURESH	R SESHAGIRI	DESIGN PRESSURE CHANGED. MATERIAL CODE DESCRIPTION CHANGED. — REVISIONS ARE INDICATED AS 01

SIZE A3

FIRST ANGLE PROJECTION(ALL DIMENSIONS IN MILLIMETRES)

CAUTION THE INFORMATION ON THIS DOCUMENT IS THE PROPERTY OF BHARAT HEAVY ELECTRICALS LIMITED. IT MUST NOT BE USED DIRECTLY OR INDIRECTLY IN ANY WAY DETRIMENTAL TO THE INTEREST OF THE COMPANY

DRAWING No 3-80-300-34676

12.5

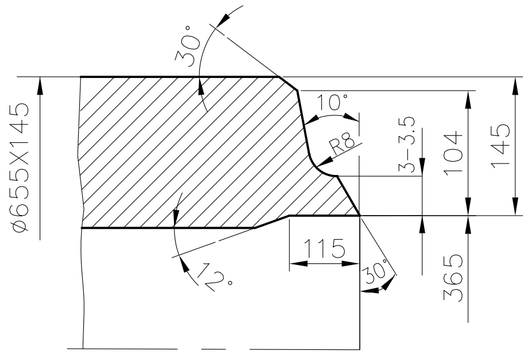

DETAIL-A

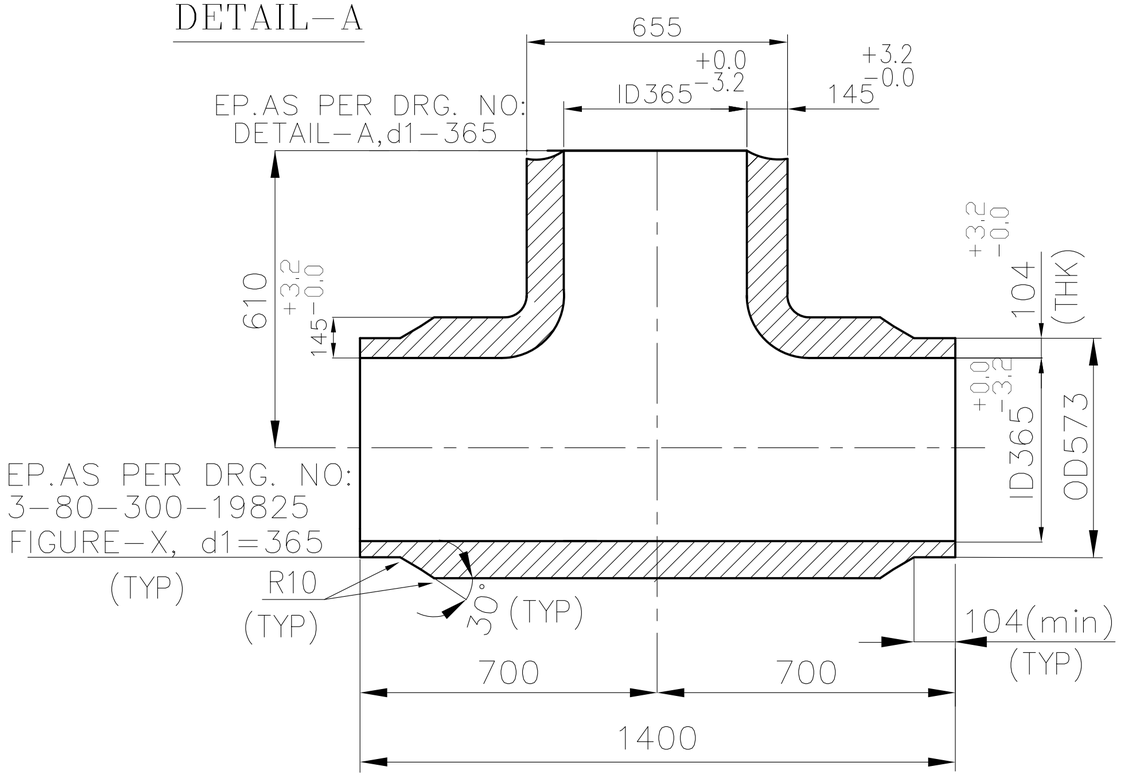

NOTES :-

01. DESIGN PRESSURE : 298 kg/sq.cm.(g)
02. DESIGN TEMPERATURE : 608° C
03. ALL DIMENSIONS ARE FINISHED DIMENSIONS.
04. MANUFACTURING, INSPECTION AND TESTING SHALL BE AS PER IBR, ASME B16.9 AND SA182
05. FITTING TO COMPLY WITH ASME B16.9 AND DIMENSIONS ARE AS PER THIS DRAWING.
06. FOLLOW TDG:104 (LATEST VERSION)
07. WEIGHT GIVEN IN TITLE BLOCK IS INDICATIVE ONLY. VENDOR SHALL SUBMIT FINAL DRAWING WITH DIMENSIONS AND ACTUAL WEIGHT FOR APPROVAL BEFORE MANUFACTURING.
08. CONSTRUCTION SHALL BE SEAMLESS

ITEM NO.	DESCRIPTION	DRAWING NO.	ITEM NO. / VAR NO.	MATERIAL CODE / MATERIAL SPEC.	A / C	UNIT WT. / QTY.
01	BW EQT ID365X104	3-80-300-34676		92 505 183 0000 / SA 182 F92	A	1480,000 / 1

TYPE OF PRODUCT OR NAME OF CUSTOMER/PROJECT

BHARAT HEAVY ELECTRICALS LTD., PIPING CENTRE, CHENNAI 600 017

	NAME	SIGN	DATE	NO OF ITEMS
DRN	RP SINGH		19.10.18	
CHD	KONDAPA NAIDU		19.10.18	
APPD	R.SESHAGIRI		19.10.18	

DEPT. / CODE	GRADE OF UN TOL. DIM	SCALE	WEIGHT (Kg).	BHEL PO REF.NO:	ITEM No.
	C/M/F	N.T.S.	~1480		

TITLE **BW EQT** (ID365X104-SA182F92)

CARD CODE U 01

DRAWING No. **3-80-300-34676**

REV **00**

REV	DATE	ALTD : / APPD :	REV	DATE	ALTD : / APPD :
02			01		

SIZE A3

CORPORATE QUALITY ASSURANCE
SUB-VENDOR QUESTIONNAIRE

i.	Item/Scope of Sub-contracting			
ii.	Address of the registered office	Details of Contact Person (Name, Designation, Mobile, Email)		
iii.	Name and Address of the proposed Sub-vendor's works where item is being manufactured	Details of Contact Person: (Name, Designation, Mobile, Email)		
iv.	Annual Production Capacity for proposed item/scope of sub-contracting			
v.	Annual production for last 3 years for proposed item/scope of sub-contracting			
vi.	**Details of proposed works**			
1.	Year of establishment of present works			
2.	Year of commencement of manufacturing at above works			
3.	Details of change in Works address in past (if any)			
4.	Total Area			
	Covered Area			
5.	Factory Registration Certificate	Details attached at Annexure – F2.1		
6.	Design/ Research & development set-up (No. of manpower, their qualification, machines & tools employed etc.)	Applicable / Not applicable if manufacturing is as per Main Contractor/purchaser design) Details attached at Annexure – F2.2 (if applicable)		
7.	Overall organization Chart with Manpower Details (Design/Manufacturing/Quality etc)	Details attached at Annexure – F2.3		
8.	After sales service set up in India, in case of foreign sub-vendor (Location, Contact Person, Contact details etc.)	Applicable / Not applicable Details attached at Annexure – F2.4		
9.	Manufacturing process execution plan with flow chart indicating various stages of manufacturing from raw material to finished product including outsourced process, if any	Details attached at Annexure – F2.5		

10.	**Quality Control exercised during receipt of raw material/BOI, in-process , Final Testing, packing**	**Details attached at Annexure – F2.6**
11.	**Manufacturing facilities** **(List of machines, special process facilities, material handling etc.)**	**Details attached at Annexure – F2.7**
12.	**Testing facilities** **(List of testing equipment)**	**Details attached at Annexure – F2.8**
13.	**If manufacturing process involves fabrication then-** **List of qualified Welders** **List of qualified NDT personnel with area of specialization**	**Applicable / Not applicable** **Details attached at Annexure – F2.9** **(if applicable)**
14.	**List of out-sourced manufacturing processes with Sub-Vendors' names & addresses**	**Applicable / Not applicable** **Details attached at Annexure. –F2.10** **(if applicable)**
15.	**Supply reference list including recent supplies**	**Details attached at Annexure – F2.11** **(as per format given below)**

Project/ package	*Customer Name*	*Supplied Item (Type/Rating/Model /Capacity/Size etc)*	*PO ref no/date*	*Supplied Quantity*	*Date of Supply*

16.	**Product satisfactory performance feedback letter/certificates/End User Feedback**	**Attached at annexure - F2.12**
17.	**Summary of Type Test Report (Type Test Details, Report No, Agency, Date of testing) for the proposed product (similar or higher rating)** **Note:- Reports need not to be submitted**	**Applicable / Not applicable** **Details attached at Annexure – F2.13** **(if applicable)**
18.	**Statutory / mandatory certification for the proposed product**	**Applicable / Not applicable** **Details attached at Annexure – F2.14** **(if applicable)**
19.	**Copy of ISO 9001 certificate** **(if available)**	**Attached at Annexure – F2.15**
20.	**Product technical catalogues for proposed item (if available)**	**Details attached at Annexure – F2.16**

Name:		**Desig:**		**Sign:**		**Date:**	

Company's Seal/Stamp:-

BHARAT HEAVY ELECTRICALS LIMITED
PIPING CENTRE, PURCHASE
BHEL / CHENNAI – 600 017

THIRD PARTY NON-DISCLOSURE AGREEMENT

I, _____, on behalf of the _____ (Name of Company), acknowledge that the information received or generated, directly or indirectly, while working with BHEL, Piping Centre, Chennai on contract is confidential and that the nature of the business of the BHEL, Piping Centre, Chennai is such that the following conditions are reasonable, and therefore:

I warrant and agree as follows:

I, or any other personnel employed or engaged by our company, agree not to disclose, directly or indirectly, any information related to the BHEL, Piping Centre, Chennai Without restricting the generality of the foregoing, it is agreed that we will not disclose such information consisting but not necessarily limited to:

- Technical information: Methods, drawings, processes, formulae, compositions, systems, techniques, inventions, computer programs/data/configuration and research projects.
- Business information: Customer lists, project schedules, pricing data, estimates, financial or marketing data.

On conclusion of contract, I, or any other personnel employed or engaged by our company shall return to BHEL, Piping Centre, Chennai all documents and property of BHEL, Piping Centre, Chennai, including: drawings, blueprints, reports, manuals, computer programs/data/configuration, and all other materials and all copies thereof relating in any way to BHEL, Piping Centre, Chennai's business, or in any way obtained by me during the course of contract. I further agree that I, or any others employed or engaged by our company shall not retain copies, notes or abstracts of the foregoing.

This obligation of confidence shall continue after the conclusion of the contract also.

I acknowledge that the aforesaid restrictions are necessary and fundamental to the business of the BHEL, Piping Centre, Chennai and are reasonable given the nature of the business carried on by the BHEL, Piping Centre, Chennai I agree that this agreement shall be governed by and construed in accordance with the laws of country.

I enter into this agreement totally voluntarily, with full knowledge of its meaning, and without duress.

Dated at _____, this ____ day of _____, 20__.

Name

Company

Signature

बी एच ई एल BHEL	**Bharat Heavy Electricals Limited, Piping Centre, Chennai.** List of raw material sources for SA182 F91 (Indigenous & Foreign)	QCP:18 Rev: 03 Date:19.07.2019 Page 1 of 2

S. No	Vendor Name	Material	Location
AA)	**Indigenous Sources**		
1	Saarloha Advance Materials Private Limited, Pune, Maharastra	F91 & F92	INDIA
2	RMG Alloy Steel Limited, Baruch, Gujarat	F91	INDIA
3	Star Wire, Faridabad	F91	INDIA
4	UP Steels, Muzafarnagar	F91	INDIA
5	Alloy Steel Plant, Durgapur	F91	INDIA
6	Mishra Datu Nigam Limited, Midhani, Hyderabad	F91	INDIA
BB)	**Foreign Sources**		
7	A.C.P. S.r.l	F91 & F92	ITALY
8	Abs Spa	F91 & F92	ITALY
9	Acciaieria Bertoli Safau S.p.A	F91 & F92	ITALY
10	Acciaieria Fonderia Cividale S.p.A	F91 & F92	ITALY
11	Acciaieria Valbruna S.p.A	F91 & F92	ITALY
12	Afar spa	F91 & F92	ITALY
13	Ascometal (Asco Industries)	F91 & F92	ITALY
14	Aso Siderurgica S.r.l	F91 & F92	ITALY
15	Aubert & Duval	F91 & F92	ITALY
16	Baosteel Special Metals Co Ltd, Shanghai	F91 & F92	CHINA
17	Bohler Uddeholm	F91 & F92	ITALY
18	Breitenfeld Edelstahl AG	F91 & F92	AUSTRIA
19	Celsa Huta Ostrowiec SP. Z 0. 0.	F91 & F92	ITALY
20	Cogne Acciai Special S.p.A,	F91 & F92	ITALY
21	Coprosider ISF spa	F91 & F92	ITALY
22	Deutsche Edelstahlwerke GMBH	F91 & F92	GERMANY
23	Esia Fucine	F91 & F92	ITALY
24	Foc Ciscato	F91 & F92	ITALY
25	Forge Fedriga	F91 & F92	ITALY
26	Forge Monchieri spa	F91 & F92	ITALY
27	Forge Nicromo SRL	F91 & F92	ITALY
28	Forgiatura Marcora	F91 & F92	ITALY
29	Forgiatura Moderna Arese	F91 & F92	ITALY
30	Forgiatura Morandini	F91 & F92	ITALY
31	Forgiatura Vienna	F91 & F92	ITALY
32	Friulforgia Srl	F91 & F92	ITALY
33	Gloria Material Technology Corp	F91 & F92	TAIWAN
34	Gruppo Cividale	F91 & F92	ITALY
35	Industeel	F91 & F92	FRANCE
36	Inosmann	F91 & F92	ITALY
37	Inox Fucine	F91 & F92	ITALY
38	Italfond S.p.A	F91 & F92	ITALY
39	La Forgia Di Bollate	F91 & F92	ITALY

Prepared by : 19/7/19	Reviewed by : 19/07/19	Approved by: 19/7/19
Karthikeyan V, Dy.Engr/QA	Nanthini J, Dy. Mgr/QA	Panneer Selvam G, AGM/MM & Q

बी एच ई एल BHEL	**Bharat Heavy Electricals Limited, Piping Centre, Chennai.** List of raw material sources for SA182 F91 (Indigenous & Foreign)	QCP:18 Rev: 03 Date:19.07.2019 Page 2 of 2

S. No	Vendor Name	Material	Location
40	Lucchini RS S.p.A, Foroni S.p.A	F91 & F92	ITALY
41	Metalcam spa	F91 & F92	ITALY
42	MT Acciai S.r.L	F91 & F92	ITALY
43	NLMK Verona S.p.A	F91 & F92	ITALY
44	Olifer ACP spa	F91 & F92	ITALY
45	Olifer, Cogne	F91 & F92	ITALY
46	Pilsen Steel	F91 & F92	ITALY
47	Rubiera Special Steel S.p.A	F91 & F92	ITALY
48	Sider Plating Scaiigera	F91 & F92	ITALY
49	Società ED Indirizzo	F91 & F92	ITALY
50	Special Flanges SRL	F91 & F92	ITALY
51	Stahlwerk Bous GmBH	F91 & F92	GERMANY
52	Valforge SRL	F91 & F92	ITALY
53	Veronal steel	F91 & F92	ITALY
54	Vitkovice Heavy Machinery	F91 & F92	ITALY
55	Xincheng Special Steel Co Ltd, Jiangsu	F91 & F92	CHINA

Record of Revision

Rev 00:	Fresh Issue	01.12.2013
Rev 01:	Heading Modified, Sources added based on MOM between BHEL, Trichy & NTPC - May 2014, NTPC approval letter for Chinese pipe makers.	21.09.2017
Rev 02:	Heading Modified, Sources added based on Enq.4101700030 dt:24.07.2017 vendor responses for F92 raw material sources.	25.04.2018
Rev 03:	Indigenous raw material source - S.no: 1 & 2 Vendor name changed based on name change request from vendor through Purchase dept	17.07.2019

Note: The raw material TC's shall be procured to meet IBR requirements and shall be in English only.

Prepared by : 19/7/19	Reviewed by : 19/07/19	Approved by: 19/7/19
Karthikeyan V, Dy.Engr/QA	Nanthini J, Dy. Mgr/QA	Panneer Selvam G, AGM/MM & Q