BHARAT HEAVY ELECTRICALS LIMITED,
TIRUCHIRAPPALLI 620 014
OUTSOURCING DEPARTMENT

NIT: 2024OSB051

NIC TENDER ID: 2025_BHEL_45981_1

CORRIGENDUM

Kindly note the following points w.r.t NIT 2024OSB051.

1. Standard raw material supply details (length) - Pipes will be supplied in lengths 4 M to 6 M based on procurement against individual PGMAs. Tubes will be supplied in the range of 10 M to 12 M, Rods will be supplied as 6 m, Hollow Forgings with machining allowance, Fittings with machining allowance, Plates for attachment as bits or full plate. Vendor has to prepare/machine as per drawing from above raw materials.
2. Weight of headers in below drawings Nos.:
   i. 0-10-135-01960-1-0 = 18,613 Kg
   ii. 0-10-184-01948-0-0 = 4510 Kg
   iii. 0-15-136-00418-1-0 = 20,607 Kg
3. All Headers need to be hydro tested at shop irrespective of note in the assembly Drawing.
4. Guidelines for keeping extra length for hydro testing of headers & nozzles - Normally extra length of 30 mm will be provided in tubes for hydro dummy welding. For Nozzle and Pipes dummy will be welded inside the finished pipe/nozzle. After shop hydro test, these dummies will be removed by gas cutting and grinding followed by LPI without damaging parent material.
5. Participating Bidders to refer the Bill of Quantities are as per Bill of materials list available in Assembly drawings as per tender.
6. Arranging of VCI Pellets is in vendor's scope
7. Butt joints shall be made as per the pipe lengths issues by BHEL. NO Joints are allowed in tubes. Pipe Shop butt joint's Edge preparation to be carried out EP style given in assy. Drawing only.
8. A sample photo for Erosion Shield Attached herewith.

9. Local SR by induction heating is acceptable for butt joints. However, appropriate controls as defined in the QCP:001/latest revision shall be adopted by the sub-contractor. It is also understood that after complete stub welding, the header will be put in furnace for final PWHT.
10. Part Drawings and Arrangement of Attachment Drawings as per **Annexure-B** are attached.
11. Load Distribution % is revised as per **Section I(A) - List of RSs [REVISED]**
12. List of Approved NDT Agencies as mentioned in the tender to be complied. Deviation is not acceptable.
13. Radiography shall be taken using Cobalt 60 or any other high energy source like LINAC.
14. BOW BEND to be removed by using Manual Hot Correction.

NOTE:

***

Participation by a vendor will be considered as acceptance of all Terms & Conditions, including any corrigendum

SAMPLE PHOTO OF EROSION SHIELD

NIT 2024OSB051
Section I(A) - List of RSs [REVISED]

SL. No.	RATE SCHEDULE (RS)	RATE SCHEDULE (RS) DESCRIPTION	No. of Headers	UoM	Weight (MT)	Load Distribution as a % of Weight	Approx. Material Value	Applicability of "Extra Joints"	Pre-Qualification Requirement (PQR)	Remarks (Quoted rate shall be exclusive of GST)	Tolerance
1	RS01	Carbon Steel Headers	80	MT	1,140	**L01: 30%** **L02: 20%** **L03: 20%** **L04: 10%** **L05: 10%** **L06: 10%**	Rs. 1325 Lakhs	NO	PQR to be filled by Vendor as per Annexure A	Rate to be quoted in **Rs. per MT**	± 10%
2	RS02	Low Alloy Steel P12 Headers	180	MT	2,090	**L01: 30%** **L02: 20%** **L03: 20%** **L04: 10%** **L05: 10%** **L06: 10%**	Rs. 5771 Lakhs	NO	PQR to be filled by Vendor as per Annexure A	Rate to be quoted in **Rs. per MT**	± 10%
				Total	**3,230**						

Note:	
1	L02: Second Best Bidder L03: Third Best Bidder L04: Fourth Best Bidder L05: Fifth Best Bidder L06: Sixth Best Bidder
2	**Rate** Quoted by Vendor shall be **exclusive of GST**. GST will be paid as Extras.
3	**Vendor to Quote including Paint Rate**

NIT 2024OSB051
[Annexure-B: List of Part Drawings]

S.No.	DRAWING NO
1	0-19-763-02594
2	0-19-783-02582
3	0-19-793-02585
4	1-05-227-01980
5	1-05-231-01979
6	1-05-251-01977
7	1-05-330-01984
8	1-05-350-01988
9	1-10-176-01818
10	1-10-191-01809
11	1-19-701-02979
12	1-19-753-02984
13	1-19-783-02983
14	1-19-793-02982
15	2-10-135-00617
16	2-15-136-00125
17	2-15-136-00126
18	3-05-137-01296
19	3-05-155-01265
20	3-05-231-01108
21	3-10-135-10024
22	3-10-135-10025
23	3-10-135-10058
24	3-10-135-10106
25	3-10-176-10021
26	3-10-176-10104
27	3-10-183-10088
28	3-10-184-10090
29	3-10-184-10091
30	3-10-191-10087
31	3-10-235-10149
32	3-10-284-10107
33	3-15-136-02520
34	3-19-753-05183
35	4-05-137-03122
36	4-05-137-03218
37	4-05-137-03219
38	4-05-231-03213
39	4-05-251-03139
40	4-05-251-03211

NIT 2024OSB051
[Annexure-B: List of Part Drawings]

S.No.	DRAWING NO
41	4-05-251-03212
42	4-05-327-03138
43	4-05-327-03217
44	4-05-330-03216
45	4-10-135-06771
46	4-10-135-06897
47	4-10-135-06898
48	4-10-176-06896
49	4-10-183-06882
50	4-10-183-06883
51	4-10-184-06886
52	4-10-191-06881
53	4-10-235-06907
54	4-10-235-06908
55	4-10-235-06909
56	4-10-284-06900
57	4-10-284-06901
58	4-19-701-08332

CORPORATE DRG ID:TP-DG-0-19-763-02594/01

DRAWING NO: 0-19-763-02594

FOR TOLERANCES OF UNTOLERANCED DIMENSIONS DURING MANUFACTURE REFER PLANT STD. NO TP 023 0299

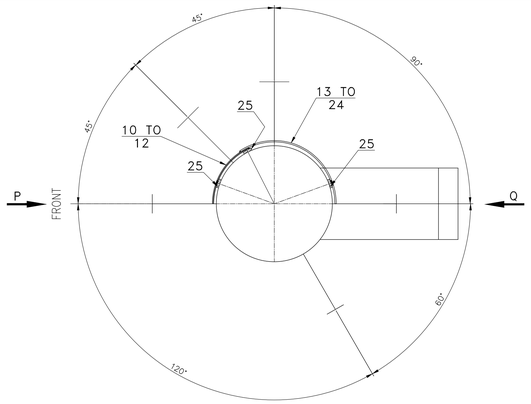

ECON. JUNCTION HEADER(E-07B)

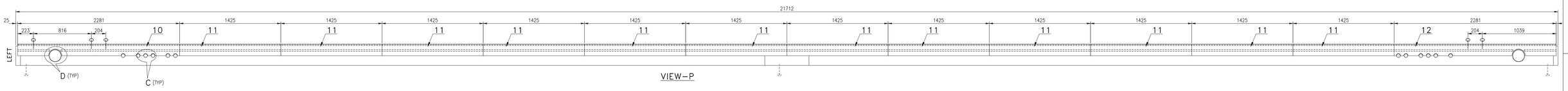

VIEW–P

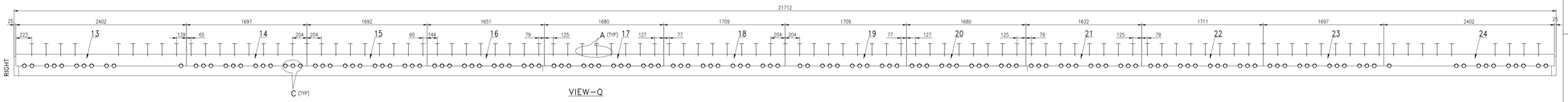

VIEW–Q

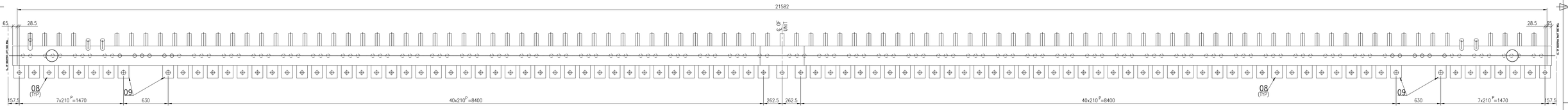

LUG ATTACHMENT

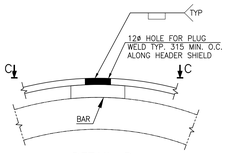

DETAIL–P

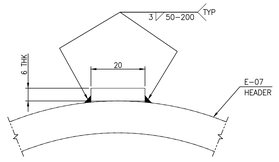

WELDING DETAIL OF HEADER BAR ON HEADER
TYP. ALL BAR LOCATIONS

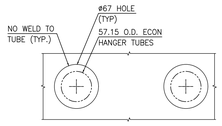

DETAIL–A

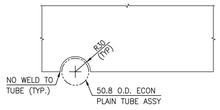

DETAIL–C

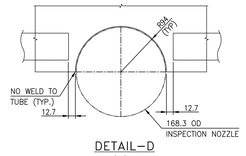

DETAIL–D
TYP. (2) PLCS

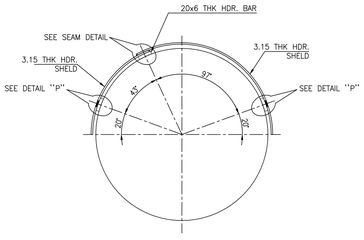

TYP. WELDING DETAIL OF HEADER SHIELD

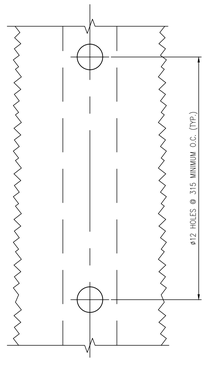

VIEW–CC

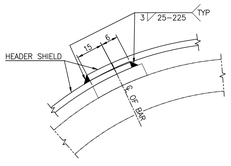

SEAM DETAIL
TYP. AT ALL SEAMS

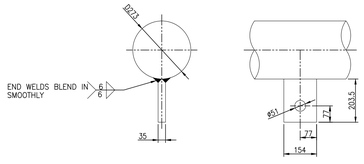

DETAIL OF ITEM No.08

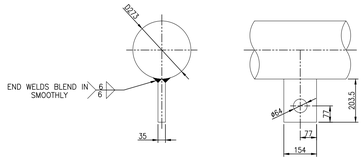

DETAIL OF ITEM No.09

NOTES:

01. THIS DRAWING SHOULD READ ALONG WITH DRG No: 0-19-763-02593
02. MINIMUM GAP OF 12.7MM TO BE MAINTAINED ON EITHER SIDE OF TUBE,WHILE WELDING HEADER BAR.

REV	DATE	ALTERED : SHEEBA S
01	21.9.24	CHD: & APPD : N NIRMAL
ZONE		DRAWING UPDATED.

CAUTION: The information in this document is the property of BHARAT HEAVY ELECTRICALS LTD. It may not be used directly or indirectly in any way detrimental to the interest of the company.

TYPE OF PRODUCT OR NAME OF CUSTOMER/PROJECT

Bharat Heavy Electricals Ltd
UNIT: HIGH PRESSURE BOILER PLANT
TIRUCHIRAPALLI – 620014

	NAME	SIGNATURE	DATE
DRN	SHEEBA S		30.08.2024
CHD	R.DHANANJAYAN		03.09.2024
APPD	N.NIRMAL		03.09.2024

355–052

DEPT	PD	ALL DIMENSIONS ARE IN MM	PROJECTION	SCALE	WEIGHT (Kg)
CODE	121			N.T.S	——

REF TO ASSY / OLD DWG
PPA MODEL: E-07 ,0-19-763-02593
0-00-027-35405,3-PP-SAN-38293

TITLE: ARRANGEMENT OF ATTACHMENT ON ECON.JUNCTION HEADER (E-07B)

DRAWING NO : 0-19-763-02594 REV 01

CORPORATE DRG ID:TP-DG-0-19-763-02594/01

CORPORATE DRG ID:TP-DG-0-19-783-02582/01

DRAWING NO: 0-19-783-02582

FOR TOLERANCES OF UNTOLERANCED DIMENSIONS DURING MANUFACTURE REFER PLANT STD. NO TP 023 0299

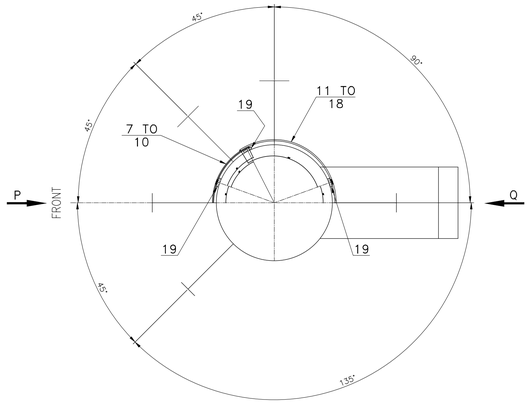

ECON. JUNCTION HEADER(E-07C)

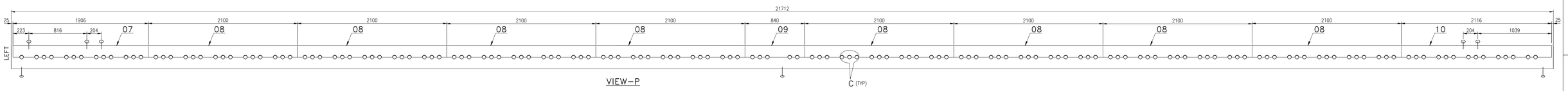

VIEW–P

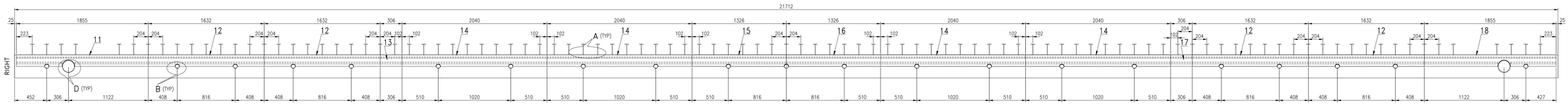

VIEW–Q

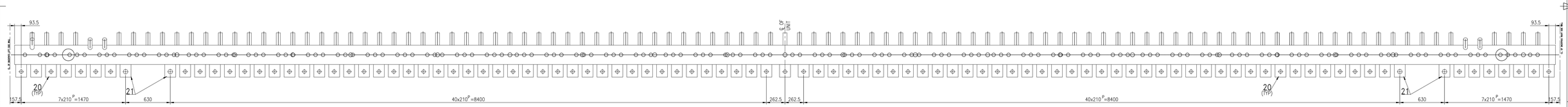

LUG ATTACHMENT

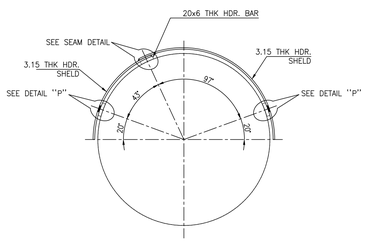

TYP. WELDING DETAIL OF HEADER SHIELD

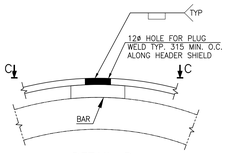

DETAIL–P

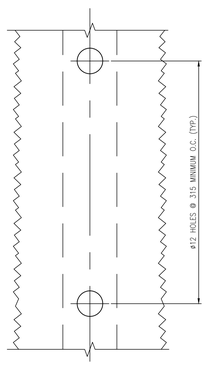

VIEW–CC

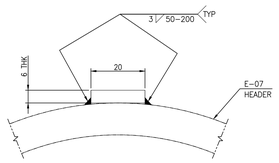

WELDING DETAIL OF HEADER BAR ON HEADER
TYP. ALL BAR LOCATIONS

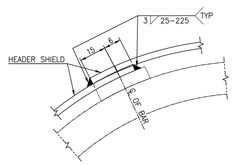

SEAM DETAIL
TYP. AT ALL SEAMS

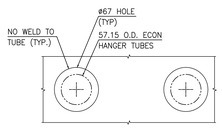

DETAIL–A

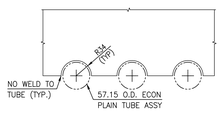

DETAIL–B

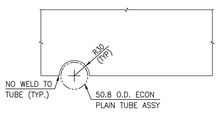

DETAIL–C

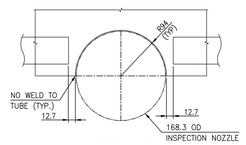

DETAIL–D
TYP. (2) PLCS

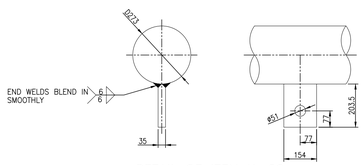

DETAIL OF ITEM No.20

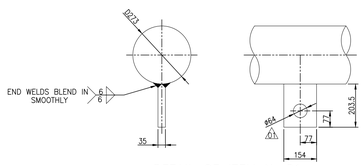

DETAIL OF ITEM No.21

NOTES:

01.THIS DRAWING SHOULD READ ALONG WITH DRG No: 0–19–783–02581
02.MINIMUM GAP OF 12.7MM TO BE MAINTAINED ON EITHER SIDE OF TUBE,WHILE WELDING HEADER BAR.

REV	DATE	ALTERED : SHEEBA S
01	28.9.24	CHD & APPD : N.NIRMAL
ZONE		HOLE SIZE CORRECTED.

CAUTION: The information in this document is the property of BHARAT HEAVY ELECTRICALS LTD and is to be used directly or indirectly in the interest of the company only.

TYPE OF PRODUCT OR NAME OF CUSTOMER/PROJECT

Bharat Heavy Electricals Ltd
UNIT: HIGH PRESSURE BOILER PLANT
TIRUCHIRAPALLI – 620014

	NAME	SIGNATURE	DATE
DRN	SHEEBA S		16.08.2024
CHD	N.NIRMAL		27.08.2024
APPD	N.NIRMAL		27.08.2024

DEPT	PROJECTION	SCALE	WEIGHT (Kg)	REF TO ASSY / OLD DWG
pp		N.T.S	——	PPA MODEL: E–07 ,0–19–783–02581 0–00–027–35405,3–PP–SAN–38293
CODE 121	ALL DIMENSIONS ARE IN MM			

TITLE: ARRANGEMENT OF ATTACHMENT ON ECON.JUNCTION HEADER (E–07C)

DRAWING NO : 0–19–783–02582 REV 01

CORPORATE DRG ID:TP-DG-0-19-783-02582/01

CORPORATE DRG ID:TP-DG-0-19-793-02585/01

DRAWING NO: 0-19-793-02585

FOR TOLERANCES OF UNTOLERANCED DIMENSIONS DURING MANUFACTURE REFER PLANT STD. NO TP 023 0299

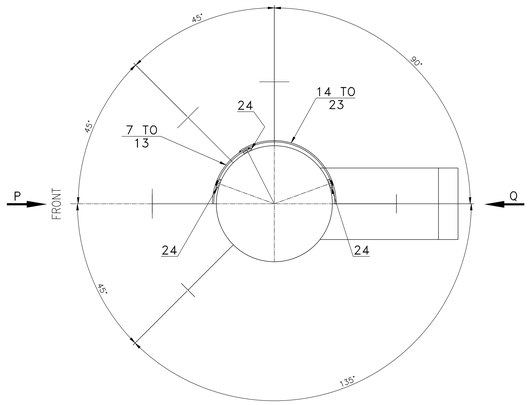

ECON. JUNCTION HEADER(E-07D)

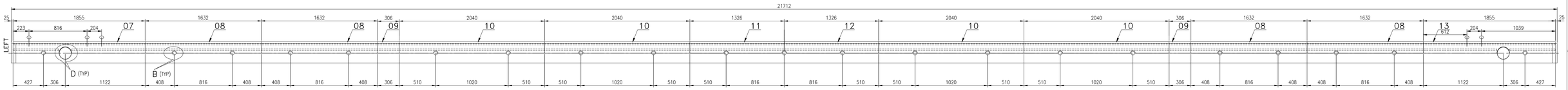

VIEW-P

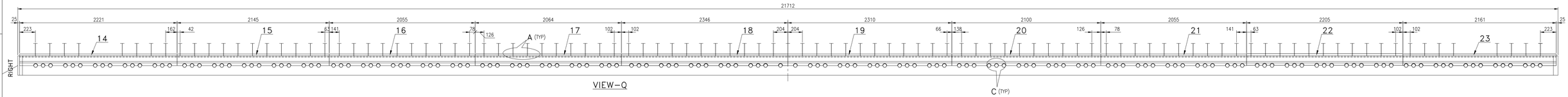

VIEW-Q

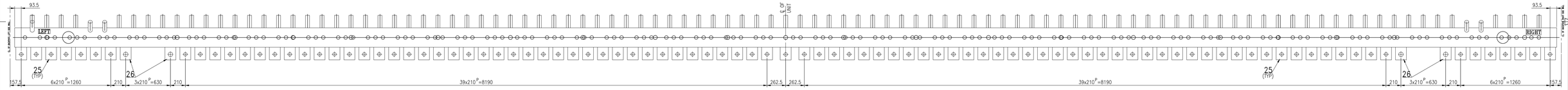

LUG ATTACHMENT

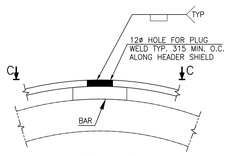

DETAIL-P

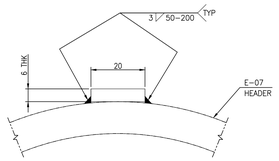

WELDING DETAIL OF HEADER BAR ON HEADER
TYP. ALL BAR LOCATIONS

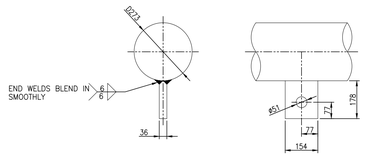

DETAIL OF ITEM No.25

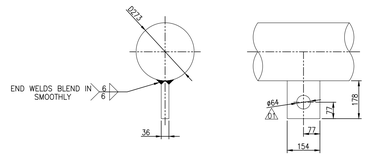

DETAIL OF ITEM No.26

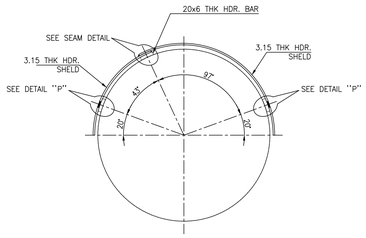

TYP. WELDING DETAIL OF HEADER SHIELD

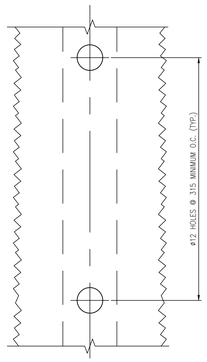

VIEW-CC

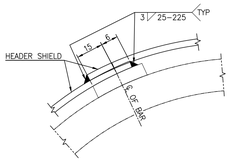

SEAM DETAIL
TYP. AT ALL SEAMS

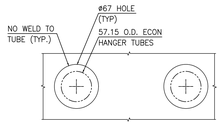

DETAIL-A

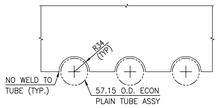

DETAIL-B

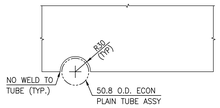

DETAIL-C

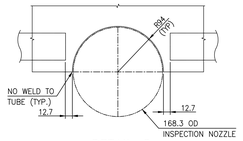

DETAIL-D
TYP. (2) PLCS

NOTES:

01.THIS DRAWING SHOULD READ ALONG WITH DRG No: 0-19-793-02584
02.MINIMUM GAP OF 12.7MM TO BE MAINTAINED ON EITHER SIDE OF TUBE,WHILE WELDING HEADER BAR.

REV	DATE	ALTERED : SHEEBA S
01	28.9.24	CHD & APPD : N.NIRMAL
ZONE		HOLE SIZE CORRECTED.

CAUTION: The information on this document is the property of BHARAT HEAVY ELECTRICALS LTD and must be used directly or indirectly for the benefit of any other party or for any other purpose.

TYPE OF PRODUCT OR NAME OF CUSTOMER/PROJECT

Bharat Heavy Electricals Ltd
UNIT: HIGH PRESSURE BOILER PLANT
TIRUCHIRAPALLI – 620014

	NAME	SIGNATURE	DATE
DRN	SHEEBA S		13.08.2024
CHD	N.NIRMAL		28.08.2024
APPD	N.NIRMAL		28.08.2024

DEPT	PP	ALL DIMENSIONS ARE IN MM	PROJECTION	SCALE	WEIGHT (Kg)	REF TO ASSY / OLD DWG
CODE	121			N.T.S	——	PPA MODEL: E-07 ,0-19-783-02584 0-00-027-35405,3-PP-SAN-38293

TITLE: ARRANGEMENT OF ATTACHMENT ON ECON.JUNCTION HEADER (E-07D)

DRAWING NO : 0-19-793-02585 REV 01

CORPORATE DRG ID:TP-DG-0-19-793-02585/01

DRAWING NO: 1-05-227-01980
CORPORATE DRG ID:TP-DG-1-05-227-01980/00

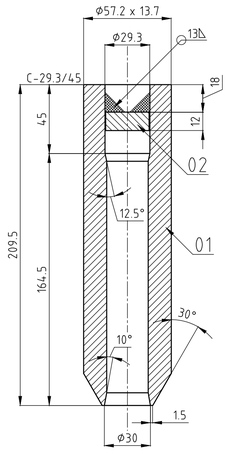

VAR-01: NIPPLE

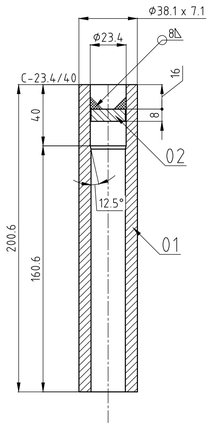

VAR-02: NIPPLE

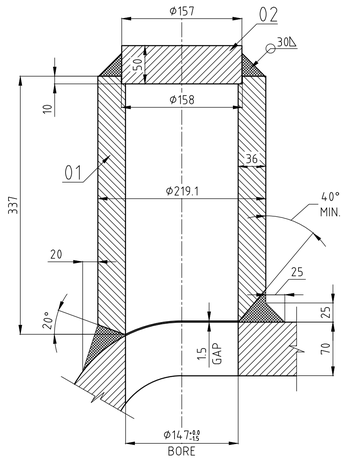

VAR-03: NOZZLE

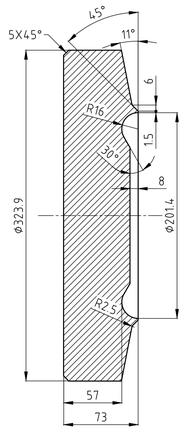

VAR-04: END COVER

NOTES:

1. DESIGN, MANUFACTURE AND INSPECTION AS PER IBR.
2. FOR DESIGN PARAMETERS REFER ASSEMBLY DRAWING.

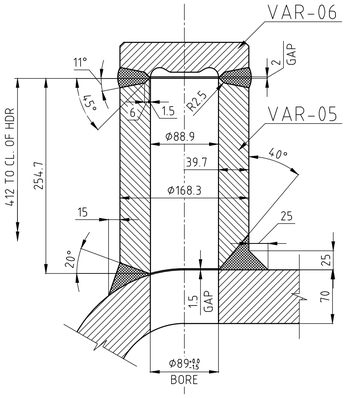

VAR-05: INSPECTION NOZZLE

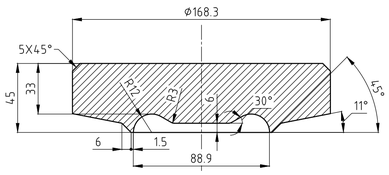

VAR-06: END COVER

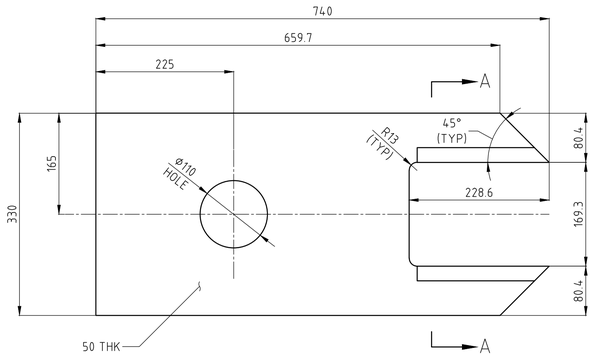

VAR-07: LUG

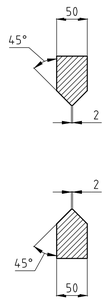

SECTION-AA

VARIANT NUMBER	ITEM NUMBER	DESCRIPTION	STD	DRAWING NUMBER	ITEM NO / VAR NO	MATERIAL CODE / MATERIAL SPECN	A/C/P / DI	UNIT /	UNIT WEIGHT / QUANTITY	GS	ZONE
09		PIPE Φ168.3 x 18.26 345.6 LONG			150904626000 SA335P12		C		23.300		
08		BEARING PLATE PL. 6 x 250 x 250			150422770000 SA387GR12CL2		C		2.490		
07		LUG PL. 50 x 330 x 740			150422860000 SA387GR12CL2		C		74.000		
06		FLAT END COVER Φ168.3; T = 33 (MIN.)			920701760000 SA182F12CL2		A		6.310		
05		INSPECTION NOZZLE Φ168.3; T=39.7(MIN.)			920846970000 SA182F12CL2		A		32.060		
04		FLAT END COVER Φ323.9; T=57 (MIN.)			920701980000 SA182F12CL2		A		40.200		
	02	PLATE 50 Φ157			150422860000 SA387GR12CL2		C		7.590 1		
	01	NOZZLE Φ219.1 T = 36.0 (MIN.)			920841790000 SA182F12CL2		A		54.780 1		
03		NOZZLE Φ219.1				WELDMENT			62.370		
	02	PLATE 8 Φ22.4			150422780000 SA387GR12CL2		C		0.024 1		
	01	TUBE Φ38.1 x 7.1 200.6 LONG			154890210001 SA213T22		A		1.140 1		
02		NIPPLE Φ38.1				WELDMENT			1.164		
	02	PLATE 12 Φ28.3			150422800000 SA387GR12CL2		C		0.060 1		
	01	TUBE Φ57.2 x 13.7 209.5 LONG			151892130001 SA213T22		A		3.220 1		
01		NIPPLE Φ57.2				WELDMENT			3.280		

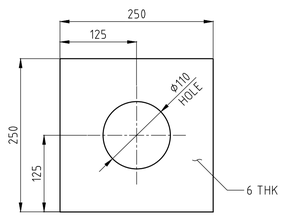

VAR-08: BEARING PLATE

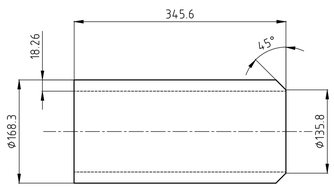

VAR-09: PIPE

REV	DATE	ALTERED :
01		CHD & APPD :
ZONE		

CAUTION: The information on this document is the property of BHARAT HEAVY ELECTRICALS LTD. It must not be used directly or indirectly in any way detrimental to the interest of the company.

TYPE OF PRODUCT
OR NAME OF
CUSTOMER/PROJECT

Bharat Heavy Electricals Ltd
UNIT: HIGH PRESSURE BOILER PLANT
TIRUCHIRAPALLI – 620014

355-053

	NAME	SIGNATURE	DATE
DRN	SAIKUMAR		24.03.2024
CHD	DHANANJAYAN		27.03.2024
APPD	NIRMAL RAJ		29.03.2024

DEPT	ALL DIMENSIONS ARE IN MM	PROJECTION	SCALE	WEIGHT (Kg)	REF TO ASSY / OLD DWG
PP			NTS	---	
CODE 121					

TITLE
DETAILS OF FURNACE
REAR OUTLET HEADER

DRAWING NO : 1-05-227-01980
REV 00

CORPORATE DRG ID:TP-DG-1-05-227-01980/00

DRAWING NO. 1-05-231-01979

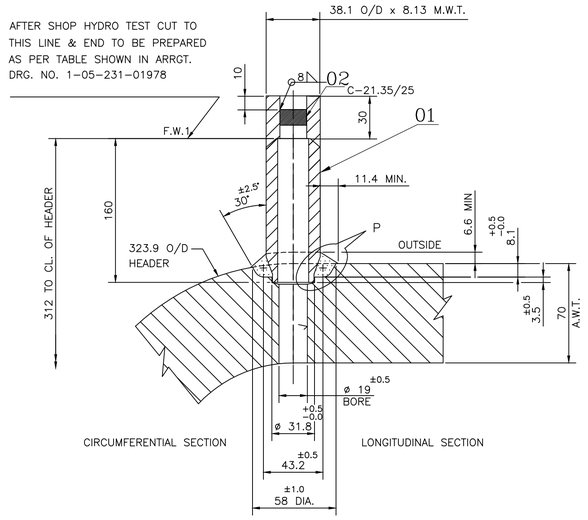

WELD DETAIL OF NIPPLE

VAR NO:01

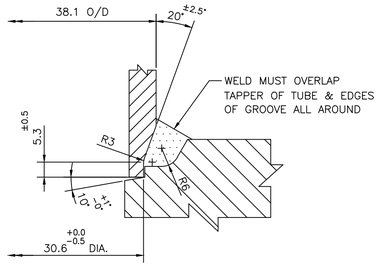

ENLARGED DETAIL 'P'

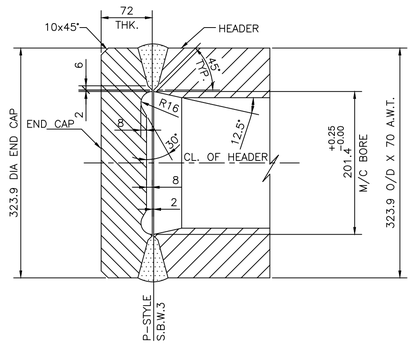

WEL DETAIL OF HEADER END CAP

FOR TOLERANCES OF UNTOLERANCED
DIMENSIONS DURING MANUFACTURE
REFER PLANT STD. NO TP 023 0299

GENERAL NOTES :

1.THIS DRG SHOULD BE READ ALONG WITH ASSEMBLY DRG NO 1-05-231-01978

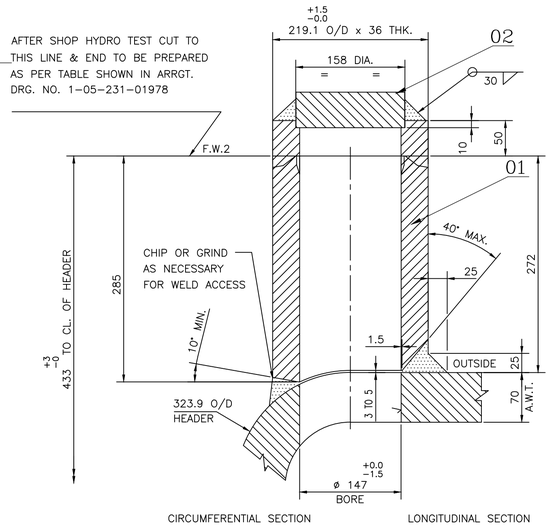

WELD DETAIL OF NOZZLE

VAR NO:02

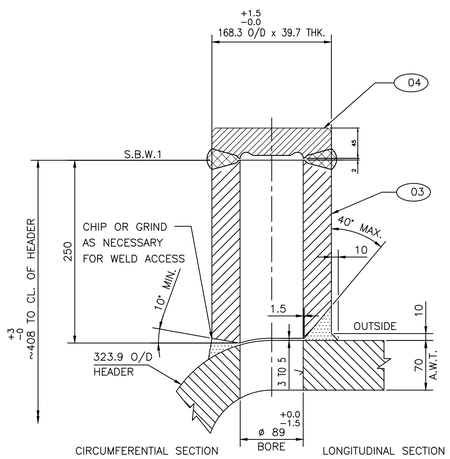

WELD DETAIL OF INSPECTION NOZZLE VAR NO:03

AND END CAP FOR INSPECTION NOZZLE VAR NO:04

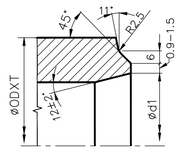

DETAIL-P

P-STYLE

WELD STYLE	"d1" VALUE
OPTIONAL JOINT	201.4
S.B.W.1	88.9
S.B.W.3	201.4

VARIANT NUMBER	ITEM NUMBER	DESCRIPTION	STD	DRAWING NUMBER	ITEM NO / VAR NO	MATERIAL CODE / MATERIAL SPECN	A/C/P	UNIT / DI	UNIT WEIGHT / QUANTITY	GS	ZONE
04		FLAT END COVER D168.3X45(NOM)		3-05-231-01108		92 070 176 0000 / SA182 F12 CL2	A		5.800 / 1		
03		INSPECTION NOZZLE D168.3X39.7				92 084 697 0000 / SA182 F12 CL2	A		31.470 / 1		
	02	PLATE D157; 50 THK				15 942 119 0000 / SA 515 Gr70	C		7.200 / 1		
	01	PIPE D219.1x36 285+50 LONG				92 084 179 0000 / SA182 F12 CL12	A		51.920 / 1		
02		NOZZLE				WELDMENT			59.120 / 1		
	02	PLATE-16; D20				15 942 112 0000 / SA 515 Gr70	C		0.360 / 1		
	01	TUBE D38.1; 8.13 THK 160+30 LONG				15 489 352 0001 / SA 213 T22	A		1.210 / 1		
01		NIPPLE				WELDMENT			1.570 / 1		

REV	DATE	ALTERED :
01		CHD & APPD :
ZONE		

CAUTION: The information on this document is the property of BHARAT HEAVY ELECTRICALS LTD. It must not be used directly or indirectly in any way detrimental to the interest of the company.

TYPE OF PRODUCT
OR NAME OF
CUSTOMER/PROJECT

Bharat Heavy Electricals Ltd
UNIT: HIGH PRESSURE BOILER PLANT
TIRUCHIRAPALLI - 620014

	NAME	SIGNATURE	DATE
DRN	SHEEBA S		23.06.18
CHD	NIRMAL		27.06.18
APPD	SAK		27.06.18

355-053

DEPT PP
CODE 121
ALL DIMENSIONS ARE IN MM
PROJECTION
SCALE N.T.S
WEIGHT (Kg) ---
REF TO ASSY / OLD DWG 1-05-231-01831

TITLE DETAIL OF FURN. UPPER FRONT OUTLET HEADER (CIRCUIT NO. F-05)

DRAWING NO : 1-05-231-01979

REV 00

DRAWING NO. 1-05-251-01977

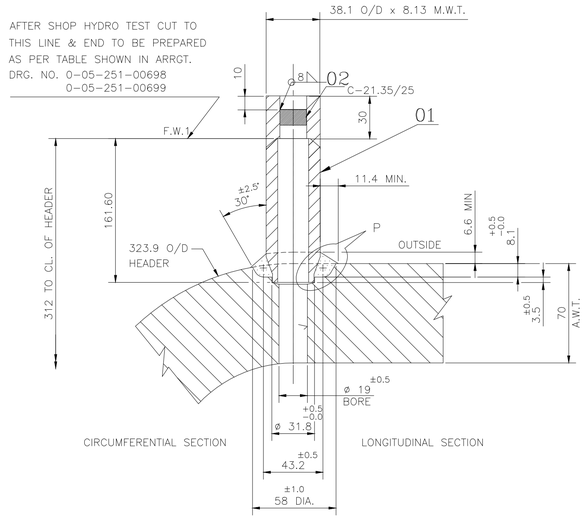

WELD DETAIL OF NIPPLE

VAR NO:01

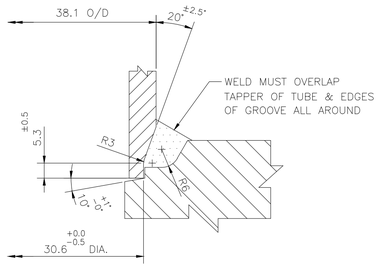

ENLARGED DETAIL 'P'

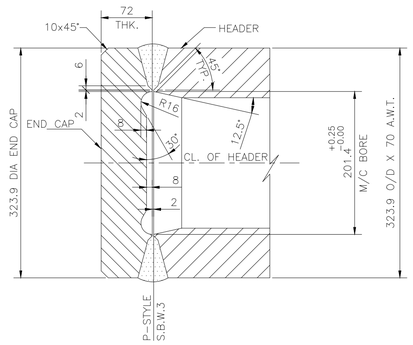

WELD DETAIL OF HEADER END CAP

FOR TOLERANCES OF UNTOLERANCED
DIMENSIONS DURING MANUFACTURE
REFER PLANT STD. NO TP 023 0299

GENERAL NOTES :

1.THIS DRG SHOULD BE READ ALONG WITH ASSEMBLY DRG NO 1-05-251-00698,
1-05-251-00699

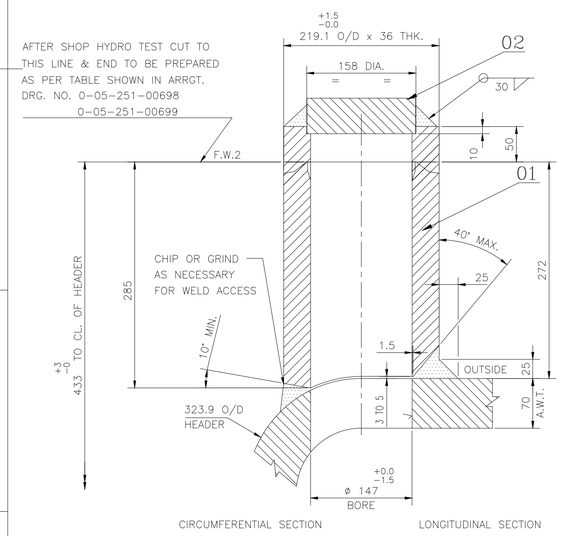

WELD DETAIL OF NOZZLE

VAR NO:02

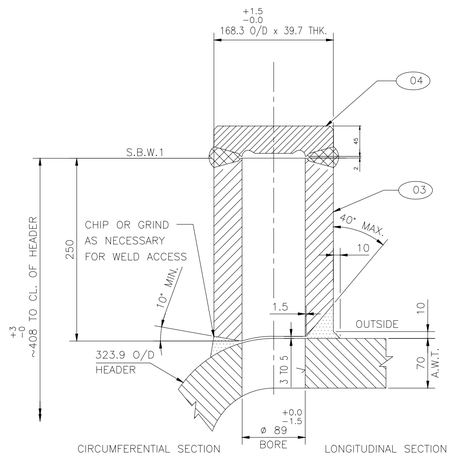

WELD DETAIL OF INSPECTION NOZZLE VAR NO:03

AND END CAP FOR INSPECTION NOZZLE VAR NO:04

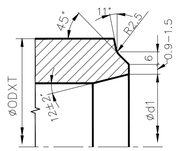

DETAIL-P

P-STYLE

WELD STYLE	"d1" VALUE
OPTIONAL JOINT	201.4
S.B.W.1	88.9
S.B.W.	201.4

VARIANT NUMBER	ITEM NUMBER	DESCRIPTION	STD	DRAWING NUMBER	ITEM NO / VAR NO	MATERIAL CODE / MATERIAL SPECN	A/C/P	UNIT / DI	UNIT WEIGHT / QUANTITY	GS	ZONE
	04	FLAT END COVER D168.3X45(NOM)		3-05-231-01108		92 070 176 0000 / SA182 F12 CL2	A		5.800 / 1		
	03	INSPECTION NOZZLE D168.3X39.7				92 084 697 0000 / SA182 F12 CL2	A		36.950 / 1		
	02	PLATE D157; 50 THK				15 942 119 0000 / SA 515 Gr70	C		7.200 / 1		
	01	PIPE D219.1x36 285+50 LONG				92 084 179 0000 / SA182 F12 CL12	A		51.920 / 1		
02		NOZZLE				WELDMENT			59.120 / 1		
	02	PLATE D20; 16 THK				15 942 112 0000 / SA 515 Gr70	C		0.360 / 1		
	01	TUBE D38.1; 8.13 THK 161.6+30 LONG				15 494 010 0001 / SA 213 T12	A		1.100 / 1		
01		NIPPLE				WELDMENT			1.460 / 1		

REV	DATE	ALTERED :
01		CHD & APPD :
ZONE		

CAUTION: The information on this document is the property of BHARAT HEAVY ELECTRICALS LTD. It must not be used directly or indirectly in any way detrimental to the interest of the company.

TYPE OF PRODUCT
OR NAME OF
CUSTOMER/PROJECT

Bharat Heavy Electricals Ltd
UNIT: HIGH PRESSURE BOILER PLANT
TIRUCHIRAPALLI - 620014

355-053

	NAME	SIGNATURE	DATE
DRN	DHANANJAYAN		26.03.24
CHD	NIRMAL		27.03.24
APPD	NIRMAL		27.03.24

DEPT PP | CODE 121 | ALL DIMENSIONS ARE IN MM | PROJECTION | SCALE N.T.S | WEIGHT (Kg) --- | REF TO ASSY / OLD DWG

TITLE: DETAIL OF FURN. UPPER SIDE OUTLET HEADERS (CIRCUIT NO. F-20)

DRAWING NO : 1-05-251-01977 | REV 00

DRAWING NO: 1-05-330-01984
CORPORATE DRG ID:TP-DG-1-05-330-01984/01

FOR TOLERANCES OF UNTOLERANCED DIMENSIONS DURING MANUFACTURE REFER PLANT STD. NO TP 023 0299

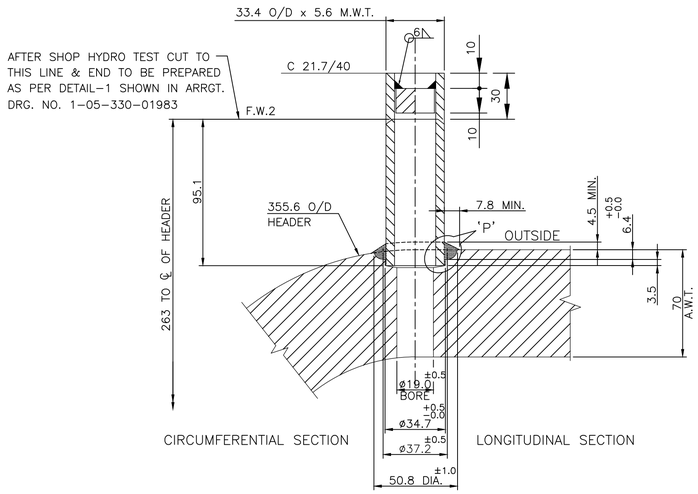

WELD DETAIL OF NIPPLE
VAR. NO. : 01

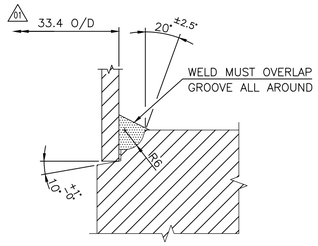

ENLARGE DETAIL 'P'

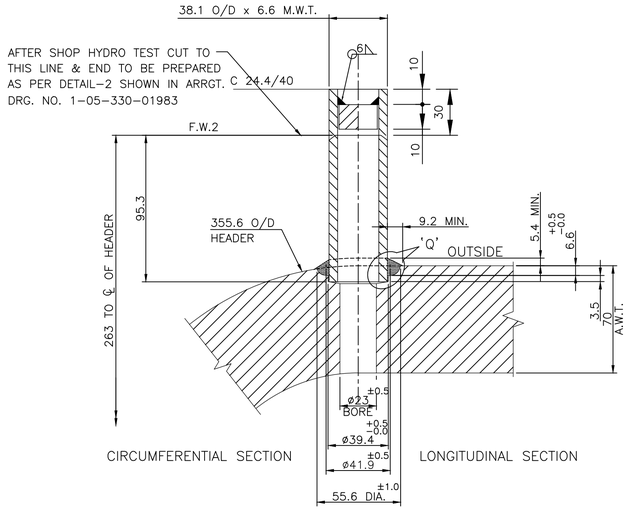

WELD DETAIL OF NIPPLE
VAR. NO. : 02

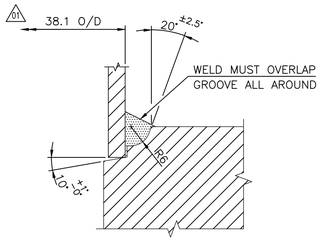

ENLARGE DETAIL 'Q'

NOTES:-

01. THIS DRAWING SHOULD BE READ ALONG WITH ASSY DRG NO: 1-05-330-01818

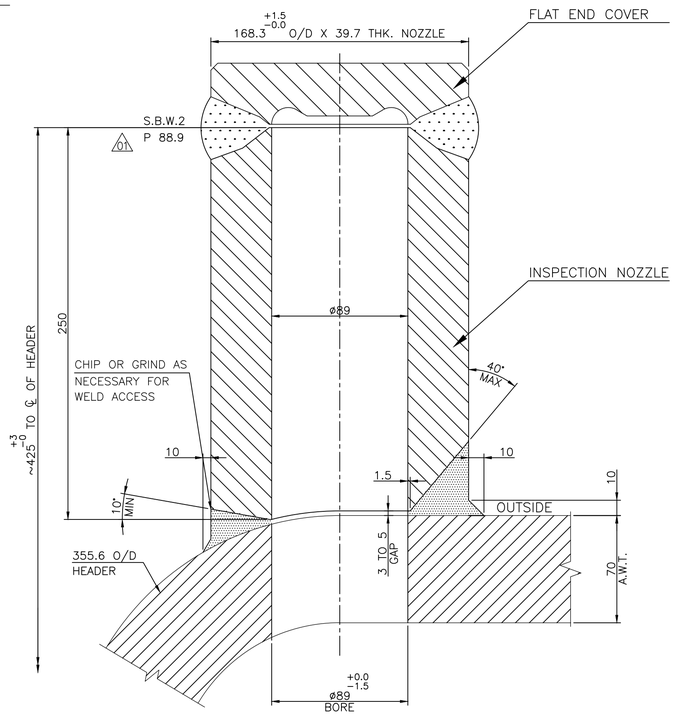

WELD DETAIL OF INSPECTION NOZZLE VAR. NO. : 04

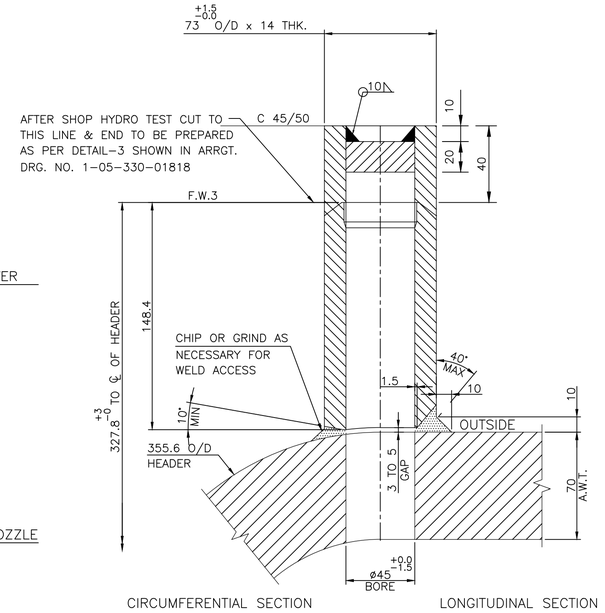

WELD DETAIL OF DRAIN NOZZLE
VAR. NO. : 05

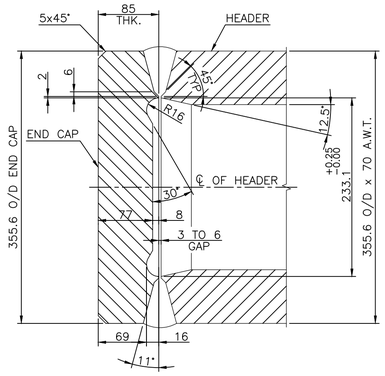

WELD DETAIL OF S.B.W.1 (FLAT END COVER)
VAR. NO. : 03

VARIANT NUMBER	ITEM NUMBER	DESCRIPTION	STD	DRAWING NUMBER	ITEM NO / VAR NO	MATERIAL CODE / MATERIAL SPECN	A/C/P	DI	UNIT WEIGHT / QUANTITY	GS	ZONE
	02	PLATE 20; D43				159421120000 / SA515GR70	C		0.300 / 1		
	01	NOZZLE D73X14 148.4+40 LONG				920841990000 / SA182F12CL2	A		15.000 / 1		
05		DRAIN NOZZLE				WELDMENT	A		15.300		
	04	INSPECTION NOZZLE D168.3X39.7(MIN)				92 084 697 0000 / SA182F12CL2	A		36.950		
	03	FLAT END COVER D355.6X69(MIN)				92 070 199 0000 / SA182F12CL2	A		70.67		
	02	PLATE 10; D23.4				150423530000 / SA515GR70	C		0.040 / 1		
	01	TUBE D38.1X6.6 95.3+30 LONG				154940201001 / SA213T12	A		0.670 / 1		
02		NIPPLE D38.1X6.6				WELDMENT	A		0.710		
	02	PLATE 8; D20.7				159422220000 / SA515GR70	C		0.020 / 1		
	01	TUBE D33.4x5.6 95.1+30 LONG				154940970501 / SA213T12	A		0.560 / 1		
01		NIPPLE D33.4X5.6				WELDMENT	A		0.580		

REV	DATE	ALTERED :R.SAI KR
01	12.08.24	CHD & APPD R.DHANANJAYAN
ZONE	DRAFTING ERROR CORRECTED.	

CAUTION: The information on this document is the property of BHARAT HEAVY ELECTRICALS LTD. It must not be used directly or indirectly in any way detrimental to the interest of the company.

TYPE OF PRODUCT OR NAME OF CUSTOMER/PROJECT

Bharat Heavy Electricals Ltd
UNIT: HIGH PRESSURE BOILER PLANT
TIRUCHIRAPALLI – 620014

355-053

	NAME	SIGNATURE	DATE
DRN	DHANANJAY		27.04.24
CHD	DHANANJAY		27.04.24
APPD	NIRMALRAJ		27.04.24

DEPT PP | CODE 121 | ALL DIMENSIONS ARE IN MM | PROJECTION | SCALE N.T.S | WEIGHT (Kg) -- | REF TO ASSY / OLD DWG 1-05-330-01819

TITLE: DETAIL OF FURNACE INTERMEDIATE FRONT HEADER (CIRCUIT No: F-03)

DRAWING NO : 1-05-330-01984 | REV 01

CORPORATE DRG ID:TP-DG-1-05-330-01984/01

DRAWING NO: 1-05-350-01988

FOR TOLERANCES OF UNTOLERANCED DIMENSIONS DURING MANUFACTURE REFER PLANT STD. NO TP 023 0299

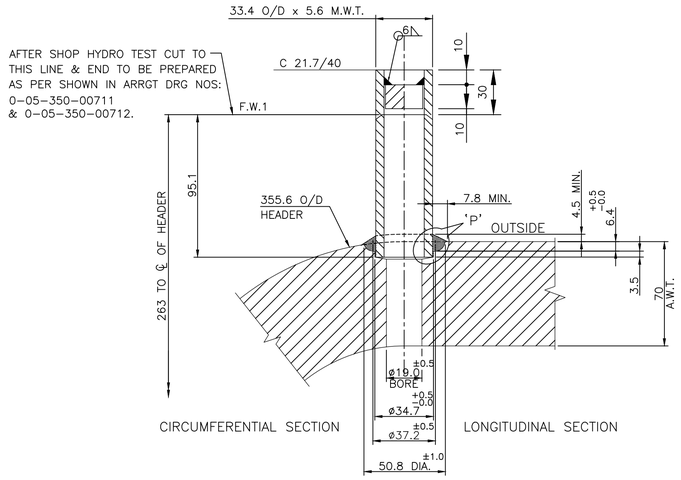

WELD DETAIL OF NIPPLE
VAR. NO. : 01

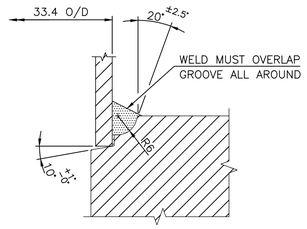

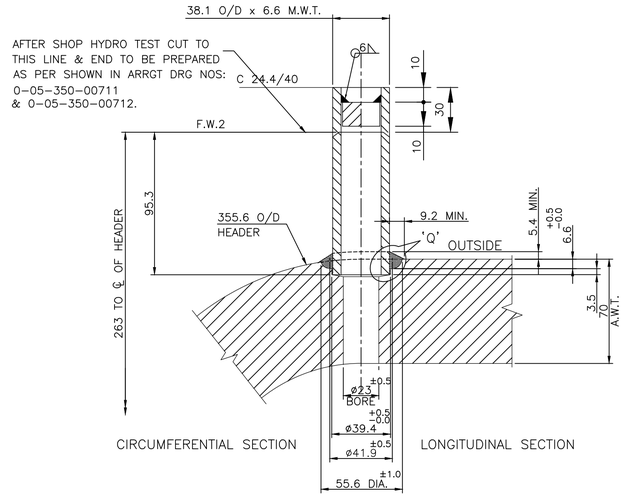

WELD DETAIL OF NIPPLE
VAR. NO. : 02

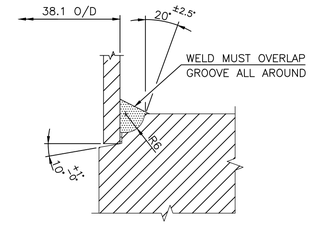

NOTES:-

01. THIS DRAWING SHOULD BE READ ALONG WITH ASSY DRAWING NOS: 0-05-350-00711 & 0-05-350-00712.

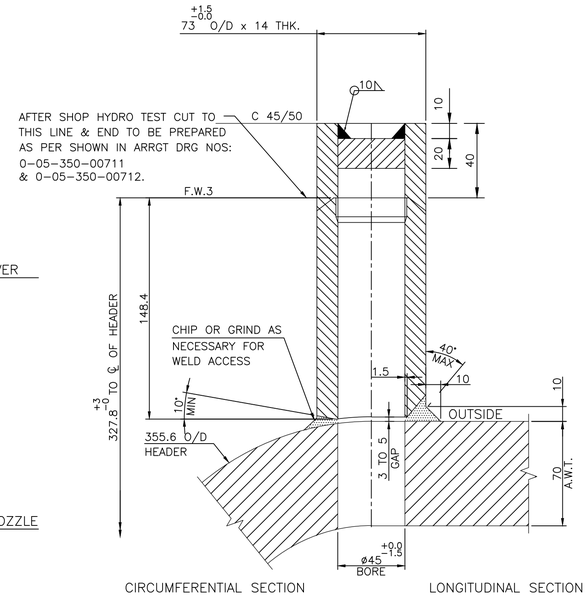

WELD DETAIL OF DRAIN NOZZLE
VAR. NO. : 04

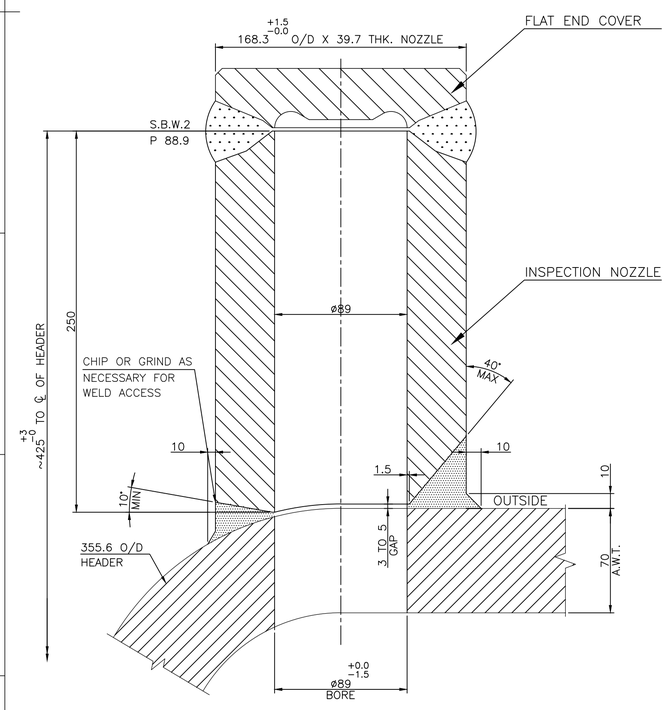

WELD DETAIL OF INSPECTION NOZZLE VAR. NO. : 03

VARIANT NUMBER	ITEM NUMBER	DESCRIPTION	STD	DRAWING NUMBER	ITEM NO / VAR NO	MATERIAL CODE / MATERIAL SPECN	A/C/P	UNIT / DI	UNIT WEIGHT / QUANTITY	GS	ZONE
	02	PLATE 20; D43			159421120000	SA515GR70	C		0.300 / 1		
	01	NOZZLE D73X14 148.4+40 LONG			920841990000	SA182F12CL2	A		15.000 / 1		
04		DRAIN NOZZLE				WELDMENT	A		15.300		
03		INSPECTION NOZZLE D168.3X39.7(MIN)			92 084 697 0000	SA182F12CL2	A		36.950		
	02	PLATE 10; D23.4			150423530000	SA515GR70	C		0.040 / 1		
	01	TUBE D38.1X6.6 95.3+30 LONG			154940201001	SA213T12	A		0.670 / 1		
02		NIPPLE D38.1X6.6				WELDMENT	A		0.710		
	02	PLATE 8; D20.7			159422220000	SA515GR70	C		0.020 / 1		
	01	TUBE D33.4x5.6 95.1+30 LONG			154940970001	SA213T12	A		0.506 / 1		
01		NIPPLE D33.4X5.6				WELDMENT	A		0.526		

REV	DATE	ALTERED :
01		CHD & APPD :
ZONE		

CAUTION: The information on this document is the property of BHARAT HEAVY ELECTRICALS LTD. It must not be used directly or indirectly in any way detrimental to the interest of the company.

TYPE OF PRODUCT OR NAME OF CUSTOMER/PROJECT

Bharat Heavy Electricals Ltd
UNIT: HIGH PRESSURE BOILER PLANT
TIRUCHIRAPALLI – 620014

355-053

	NAME	SIGNATURE	DATE
DRN	NITIN TIRKEY		30.05.24
CHD	DHANANJAYAN		31.05.24
APPD	N NIRMAL RAJ		31.05.24

DEPT PP | CODE 121 | ALL DIMENSIONS ARE IN MM | PROJECTION | SCALE N.T.S | WEIGHT (Kg) -- | REF TO ASSY / OLD DWG 1-05-330-01984

TITLE: ATTACHMENT DETAIL OF FURNACE INTERMEDIATE SIDE HEADER (F-18)

DRAWING NO : 1-05-350-01988 | REV 00

DRAWING NO: 1-10-176-01818

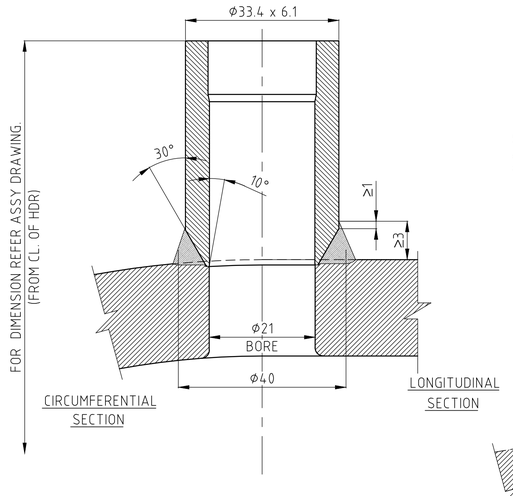

VAR-01

(Φ33.4 X 6.1)

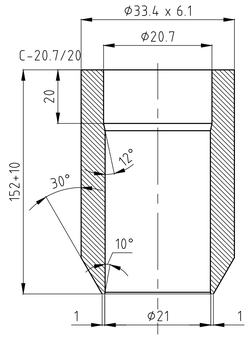

DETAIL OF NIPPLE MACHINING

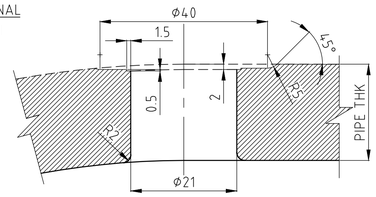

DETAIL OF DRILLING IN HEADER PIPE

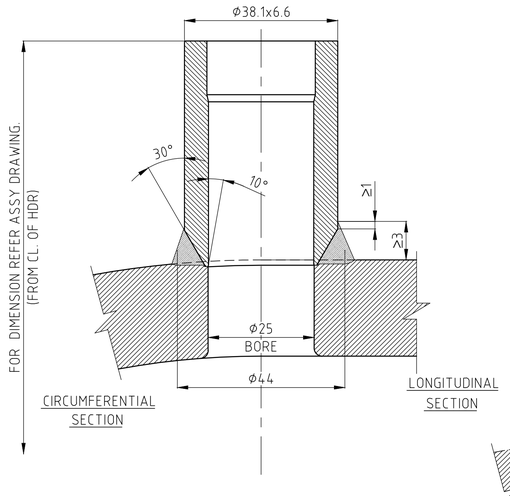

VAR-02

(Φ38.1 X 6.6)

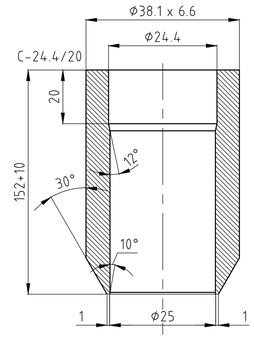

DETAIL OF NIPPLE MACHINING

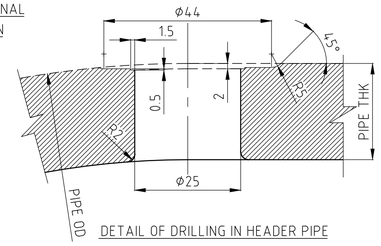

DETAIL OF DRILLING IN HEADER PIPE

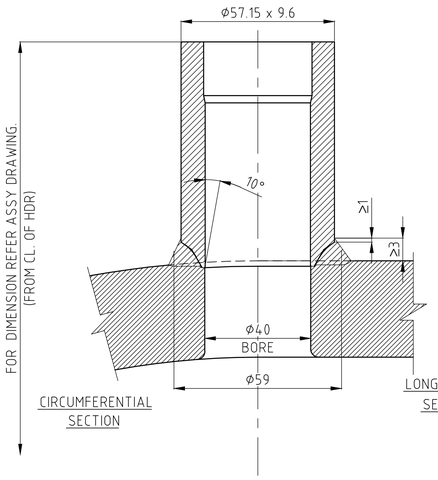

VAR-03

(Φ57.15 X 9.6)

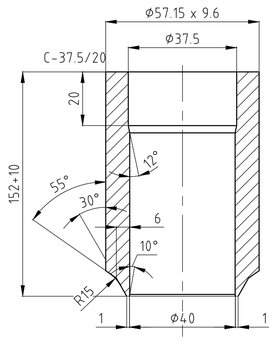

DETAIL OF NIPPLE MACHINING

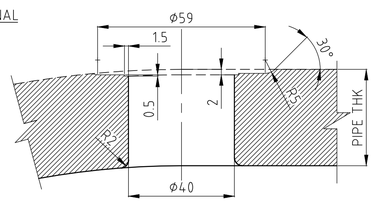

DETAIL OF DRILLING IN HEADER PIPE

NOTES:-
1. DESIGN, MANUFACTURE AND INSPECTION AS PER I.B.R
2. FOR DESIGN PARAMETER, REFER MAIN ASSEMBLY DRAWING.

VARIANT NUMBER	ITEM NUMBER	DESCRIPTION	STD	DRAWING NUMBER	ITEM NO / VAR NO	MATERIAL CODE / MATERIAL SPECN	A/C/P	UNIT / DI	UNIT WEIGHT / QUANTITY	GS	ZONE
03		NIPPLE Ø57.15x 9.6 152 + 10 LONG				154894040001	A		1.920		
						SA213T22					
02		NIPPLE Ø38.1x 6.6 152 + 10 LONG				15489330001	A		0.875		
						SA213T22					
01		NIPPLE Ø33.4x 6.1 152 + 10 LONG				154893430001	A		0.700		
						SA213T22					

CAUTION: The information on this document is the property of BHARAT HEAVY ELECTRICALS LTD. It must not be used directly or indirectly in any way detrimental to the interest of the company.

TYPE OF PRODUCT OR NAME OF CUSTOMER/PROJECT

Bharat Heavy Electricals Ltd
UNIT: HIGH PRESSURE BOILER PLANT
TIRUCHIRAPALLI – 620014

355-053

	NAME	SIGNATURE	DATE
DRN	T.SHYJU		18.05.2024
CHD	T.RAJAGOPALAN		18.05.2024
APPD	NIRMAL RAJ		18.05.2024

DEPT PP | CODE 121 | ALL DIMENSIONS ARE IN MM | PROJECTION | SCALE NTS | WEIGHT (Kg) --- | REF TO ASSY / OLD DWG 1-15-178-00451

TITLE: DETAIL OF NIPPLES

DRAWING NO: 1-10-176-01818 | REV 00

REV	DATE	ALTERED :
01		CHD & APPD :
ZONE		

CORPORATE DRG ID:TP-DG-1-10-191-01809/01

DRAWING NO: 1-10-191-01809

FOR TOLERANCES OF UNTOLERANCED DIMENSIONS DURING MANUFACTURE REFER PLANT STD. NO TP 023 0299

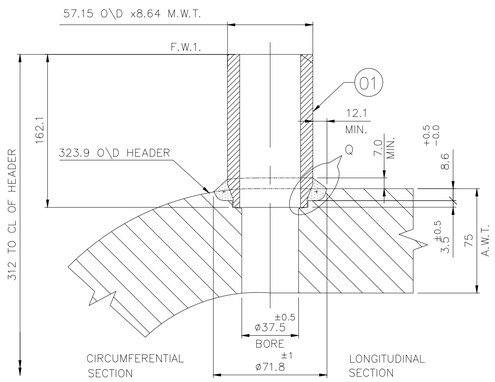

WELD DETAIL OF NIPPLE VAR.NO:01

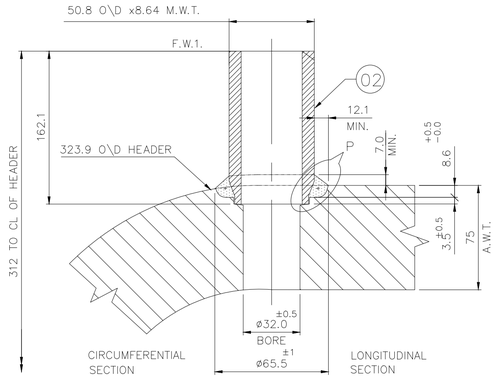

WELD DETAIL OF NIPPLE VAR.NO:02

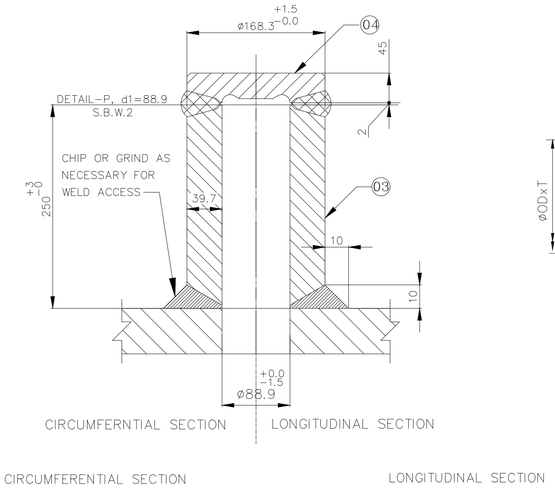

WELD DETAIL OF INSPECTION NOZZLE VAR.NO:03 &
AND END CAP FOR INSPECTION NOZZLE VAR.NO:04

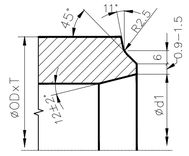

DETAIL-P

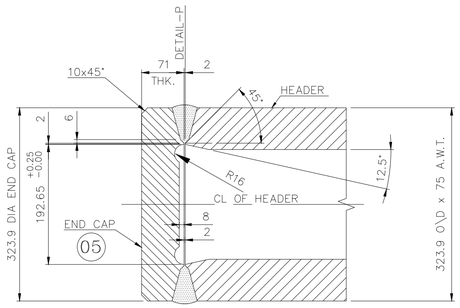

WELD DETAIL OF S.B.W.3(HEADER PIPE TO END COVER)

VAR.NO:05

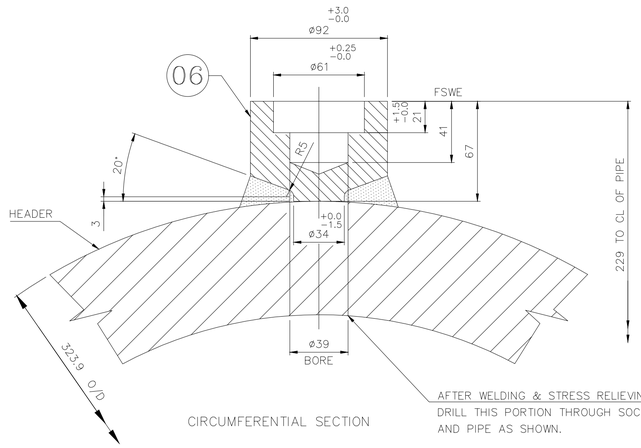

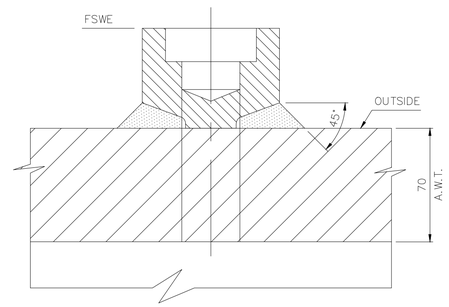

TYPICAL WELD DETAIL FOR FSWE DRAIN CONNECTION

VAR.NO:06

NOTE:

1. THIS DRAWING IS TO BE READ ALONG WITH THE ASSY DRAWING 1-10-191-01945
2. FOR TUBE SOCKET SEAT WELD REF DRAWING 1-10-183-01283

VARIANT NUMBER	ITEM NUMBER	DESCRIPTION	STD	DRAWING NUMBER	ITEM NO / VAR NO	MATERIAL CODE / MATERIAL SPECN	A/C/P	UNIT / DI	UNIT WEIGHT / QUANTITY	GS	ZONE
06		DRAIN CONN. D92X15.5				153392450000 / SA182F12CL2	A		2.500		
05		HDR END PLUG D323.9X82(NOM)				920701980000 / SA182F12CL2	A		55.000		
04		FLAT END COVER D168.3X45(NOM)		3-10-191-07199		920701760000 / SA182 F12CL2	A		5.800		
03		INSPECTION NOZZLE D168.3X39.7(MIN)				920846970000 / SA182F12CL2	A		31.500		
02		NIPPLE D50.8x8.64 161.2+10 LONG				154940280001 / SA213T12	A		1.620		
01		NIPPLE D57.15x8.64 162.2+10 LONG				154940170001 / SA213T12	A		1.870		

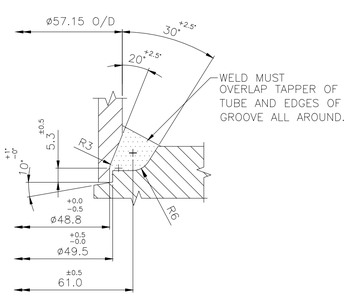

ENLARGED DETAIL 'Q'

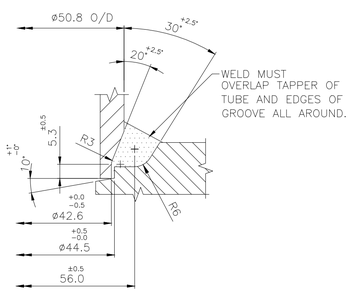

ENLARGED DETAIL 'P'

REV	DATE	ALTERED : SHYJU
01	11.09.24.	CHD & APPD :DHANANJAY
ZONE	1. DETAIL P OD VALUE CORRECTED.	

CAUTION: The information on this document is the property of BHARAT HEAVY ELECTRICALS LTD. It must not be used directly or indirectly in any way detrimental to the interest of the company.

TYPE OF PRODUCT OR NAME OF CUSTOMER/PROJECT

Bharat Heavy Electricals Ltd
UNIT: HIGH PRESSURE BOILER PLANT
TIRUCHIRAPALLI - 620014

	NAME	SIGNATURE	DATE
DRN	SAROJ KR		03.04.24
CHD	DHANANJAYAN		03.04.24
APPD	NIRMALRAJ		03.04.24

355-053

DEPT PP, CODE 121 | ALL DIMENSIONS ARE IN MM | PROJECTION | SCALE N.T.S | WEIGHT (Kg) ——— | REF TO ASSY / OLD DWG 1-10-191-01622

TITLE: DETAIL OF SH FURNACE ROOF INLET HEADER (S-02)

DRAWING NO : 1-10-191-01809 | REV 01

CORPORATE DRG ID:TP-DG-1-10-191-01809/01

CORPORATE DRG ID:TP-DG-1-19-701-02979/01

DRAWING NO: 1-19-701-02979

FOR TOLERANCES OF UNTOLERANCED DIMENSIONS DURING MANUFACTURE REFER PLANT STD. NO TP 023 0299

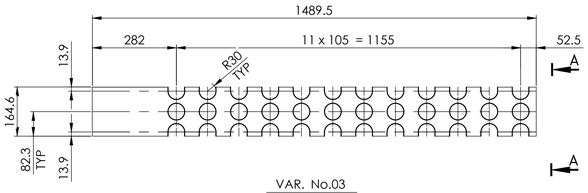

VAR. No.03
(DEVELOPED VIEW)

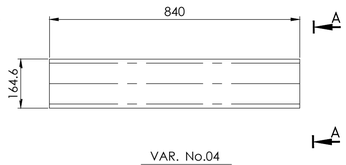

VAR. No.04
(DEVELOPED VIEW)

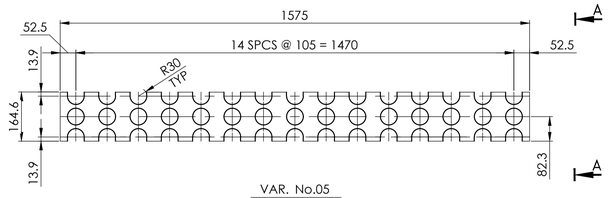

VAR. No.05
(DEVELOPED VIEW)

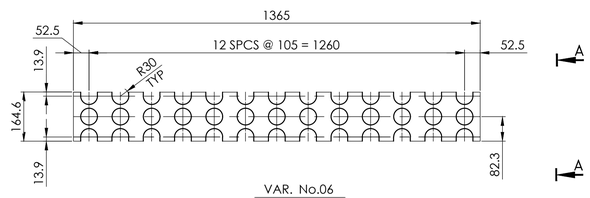

VAR. No.06
(DEVELOPED VIEW)

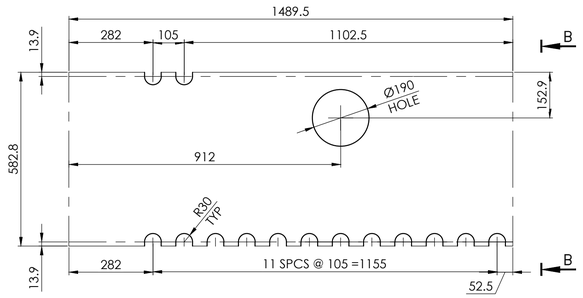

VAR. No.07
(DEVELOPED VIEW)

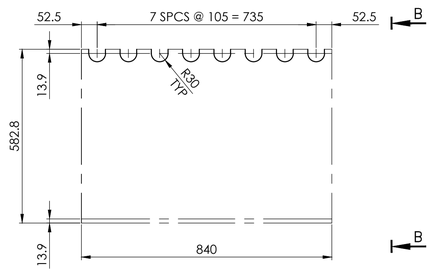

VAR. No.08
(DEVELOPED VIEW)

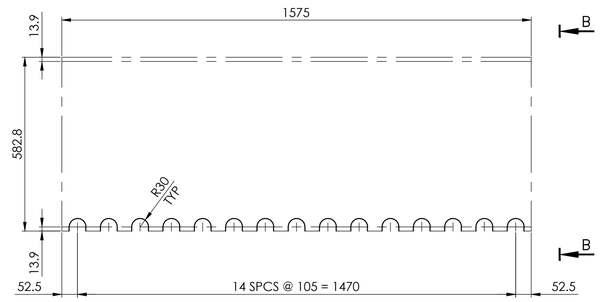

VAR. No.09
(DEVELOPED VIEW)

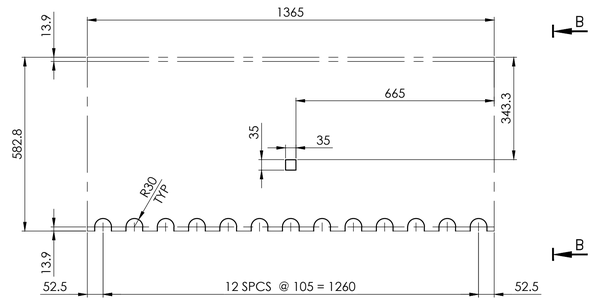

VAR. No.10
(DEVELOPED VIEW)

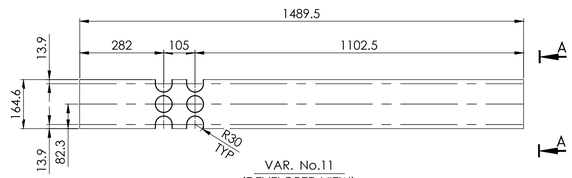

VAR. No.11
(DEVELOPED VIEW)

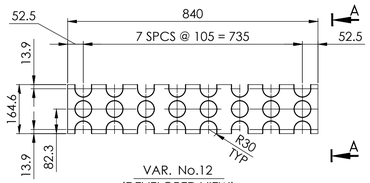

VAR. No.12
(DEVELOPED VIEW)

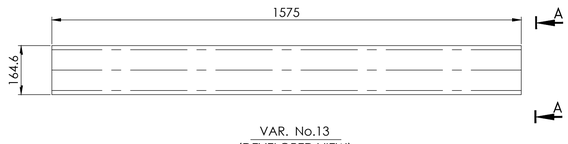

VAR. No.13
(DEVELOPED VIEW)

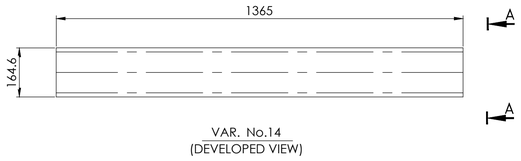

VAR. No.14
(DEVELOPED VIEW)

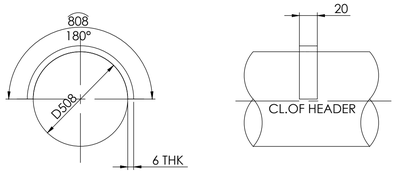

VAR. No.01

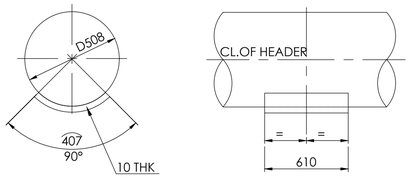

VAR. No.02

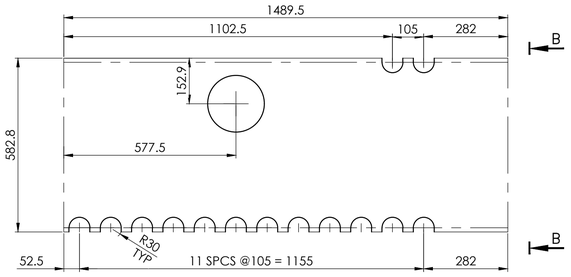

VAR. No.15
(DEVELOPED VIEW)

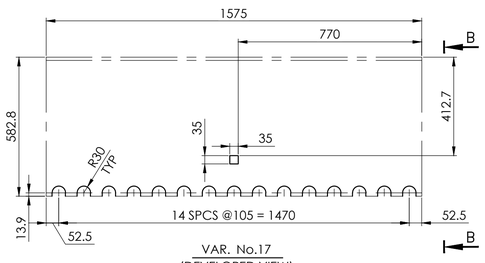

VAR. No.17
(DEVELOPED VIEW)

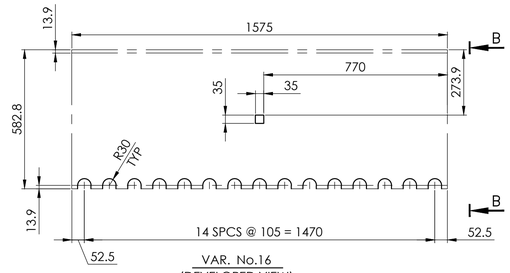

VAR. No.16
(DEVELOPED VIEW)

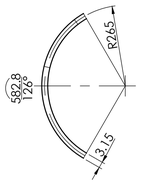

VIEW B-B

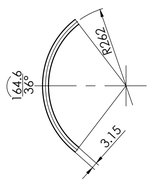

VIEW A-A

VARIANT NUMBER	ITEM NUMBER	DESCRIPTION	STD	DRAWING NUMBER	ITEM NO / VAR NO	MATERIAL CODE / MATERIAL SPECN	A/C/P	UNIT / DI	UNIT WEIGHT / QUANTITY	GS	ZONE
	17	EROSION SHIELD SH.3.15x582.8x1575				15 011 271 0000 / SA 240 TY 304	C		22.500		
	16	EROSION SHIELD SH.3.15x582.8x1575				15 011 271 0000 / SA 240 TY 304	C		22.500		
	15	EROSION SHIELD SH.3.15x582.8x1489.5				15 011 271 0000 / SA 240 TY 304	C		20.240		
	14	EROSION SHIELD SH.3.15x164.6x1365				15 011 271 0000 / SA 240 TY 304	C		5.700		
	13	EROSION SHIELD SH.3.15x164.6x1575				15 011 271 0000 / SA 240 TY 304	C		6.560		
	12	EROSION SHIELD SH.3.15x164.6x840				15 011 271 0000 / SA 240 TY 304	C		2.200		
	11	EROSION SHIELD SH.3.15x164.6x1489.5				15 011 271 0000 / SA 240 TY 304	C		5.900		
	10	EROSION SHIELD SH.3.15x582.8x1365				15 011 271 0000 / SA 240 TY 304	C		19.500		
	09	EROSION SHIELD SH.3.15x582.8x1575				15 011 271 0000 / SA 240 TY 304	C		22.500		
	08	EROSION SHIELD SH.3.15x582.8x840				15 011 271 0000 / SA 240 TY 304	C		12.000		
	07	EROSION SHIELD SH.3.15x582.8x1489.5				15 011 271 0000 / SA 240 TY 304	C		20.550		
	06	EROSION SHIELD SH.3.15x164.6x1365				15 011 271 0000 / SA 240 TY 304	C		3.560		
	05	EROSION SHIELD SH.3.15x164.6x1575				15 011 271 0000 / SA 240 TY 304	C		4.100		
	04	EROSION SHIELD SH.3.15x164.6x840				15 011 271 0000 / SA 240 TY 304	C		3.500		
	03	EROSION SHIELD SH.3.15x164.6x1489.5				15 011 271 0000 / SA 240 TY 304	C		4.240		
	02	SUPPORT PAD PL.10x407x610				15 942 279 0000 / SA 387 GR12 CL.2	C		19.490		
	01	HEADER BAR PL.6x20x808				15 011 206 0000 / SA 240 TY 304	C		0.780		

REV	DATE	ALTERED : SAROJ KR
01	09.08.24	CHD & APPD : SAI KUMAR
ZONE	EROSION SHIELD HOLE RADIUS CHANGED	

CAUTION: The information on this document is the property of BHARAT HEAVY ELECTRICALS LTD. It must not be used directly or indirectly in any way detrimental to the interest of the company.

TYPE OF PRODUCT OR NAME OF CUSTOMER/PROJECT

Bharat Heavy Electricals Ltd
UNIT: HIGH PRESSURE BOILER PLANT
TIRUCHIRAPALLI – 620014

355-053

	NAME	SIGNATURE	DATE
DRN	SAROJ KR		16.05.2024
CHD	SAI KUMAR		17.05.2024
APPD	SAI KUMAR		17.05.2024

DEPT PP
CODE 121
ALL DIMENSIONS ARE IN MM
PROJECTION
SCALE N.T.S.
WEIGHT (Kg) 00
REF TO ASSY / OLD DWG

TITLE
DETAILS OF ATTACHMENTS ON ECO.INLET HEADER (E-05)

DRAWING NO : 1-19-701-02979
REV 01

CORPORATE DRG ID:TP-DG-1-19-701-02979/01

DRAWING NO: 1-19-753-02984

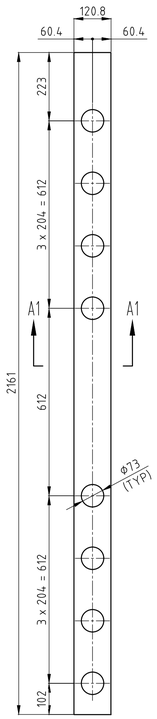

VAR-01: SHIELD
(DEVELOPED VIEW)

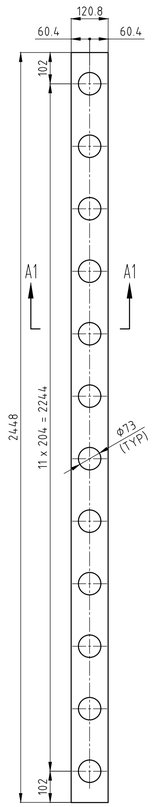

VAR-02: SHIELD
(DEVELOPED VIEW)

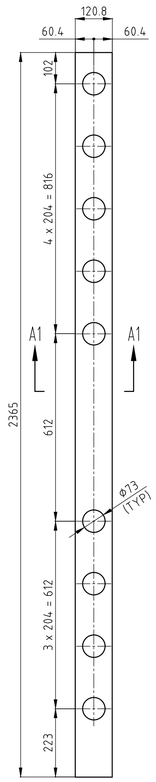

VAR-03: SHIELD
(DEVELOPED VIEW)

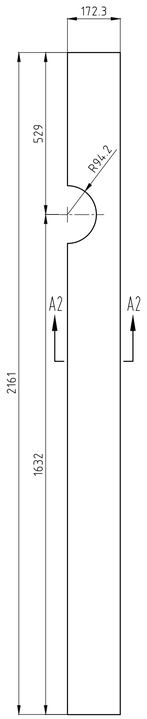

VAR-04: SHIELD
(DEVELOPED VIEW)

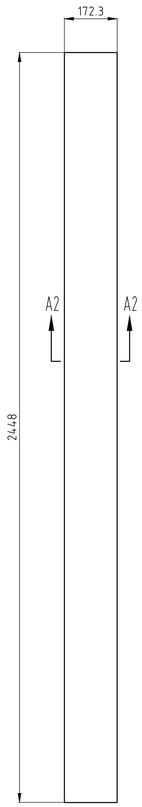

VAR-05: SHIELD
(DEVELOPED VIEW)

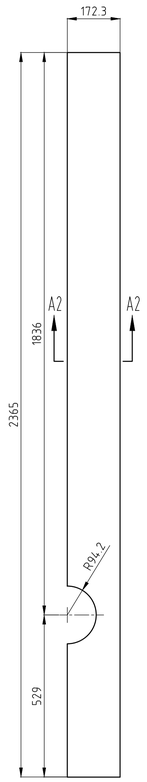

VAR-06: SHIELD
(DEVELOPED VIEW)

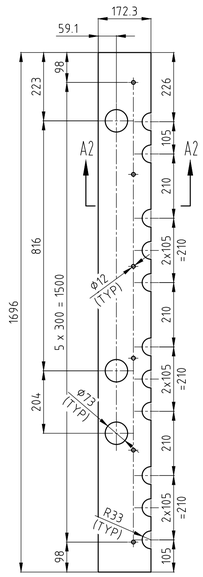

VAR-07: SHIELD
(DEVELOPED VIEW)

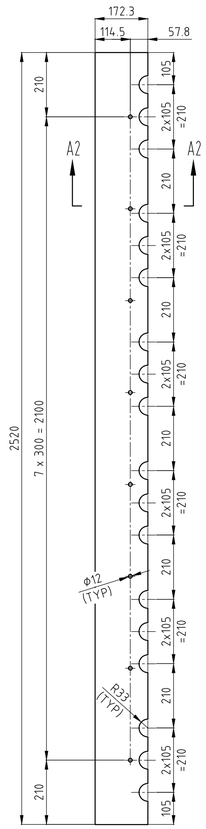

VAR-08: SHIELD
(DEVELOPED VIEW)

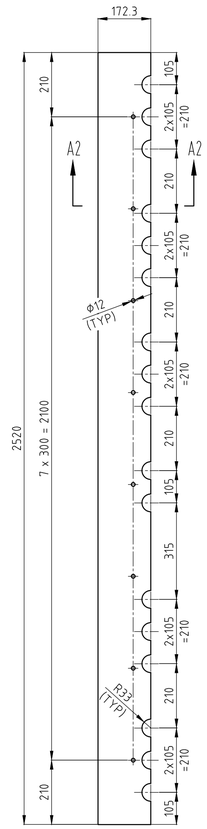

VAR-09: SHIELD
(DEVELOPED VIEW)

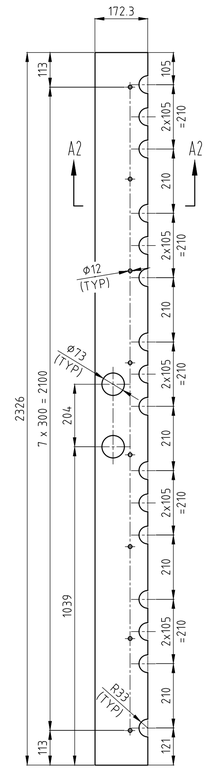

VAR-10: SHIELD
(DEVELOPED VIEW)

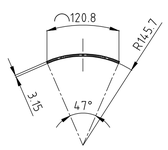

SECTION-A1A1

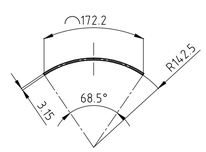

SECTION-A2A2

VARIANT NUMBER	ITEM NUMBER	DESCRIPTION	STD	DRAWING NUMBER	ITEM NO / VAR NO	MATERIAL CODE / MATERIAL SPECN	A/C/P	UNIT / DI	UNIT WEIGHT / QUANTITY	GS	ZONE
10		SHIELD 3.15 THK 172.3 X 2326				150112710000	C		9.340		
						SA240TP304			1		
09		SHIELD 3.15 THK 172.3 X 2520				150112710000	C		10.330		
						SA240TP304			1		
08		SHIELD 3.15 THK 172.3 X 2520				150112710000	C		10.300		
						SA240TP304			6		
07		SHIELD 3.15 THK 172.3 X 1696				150112710000	C		6.700		
						SA240TP304			1		
06		SHIELD 3.15 THK 172.3 X 2365				150112710000	C		9.950		
						SA240TP304			1		
05		SHIELD 3.15 THK 172.3 X 2448				150112710000	C		10.670		
						SA240TP304			7		
04		SHIELD 3.15 THK 172.3 X 2161				150112710000	C		9.070		
						SA240TP304			1		
03		SHIELD 3.15 THK 120.8 X 2365				150112710000	C		6.400		
						SA240TP304			1		
02		SHIELD 3.15 THK 120.8 X 2448				150112710000	C		6.380		
						SA240TP304			7		
01		SHIELD 3.15 THK 120.8 X 2161				150112710000	C		5.870		
						SA240TP304			1		

REV	DATE	ALTERED :
01		CHD & APPD :
ZONE		

CAUTION: The information on this document is the property of BHARAT HEAVY ELECTRICALS LTD. It must not be used directly or indirectly in any way detrimental to the interest of the company.

TYPE OF PRODUCT
OR NAME OF
CUSTOMER/PROJECT

Bharat Heavy Electricals Ltd
UNIT: HIGH PRESSURE BOILER PLANT
TIRUCHIRAPALLI – 620014

355–053

	NAME	SIGNATURE	DATE
DRN	SHEEBA		20.08.2024
CHD	NIRMAL RAJ		24.08.2024
APPD	NIRMAL RAJ		28.08.2024

DEPT	ALL DIMENSIONS ARE IN MM	PROJECTION	SCALE	WEIGHT (Kg)	REF TO ASSY / OLD DWG
PP			NTS	---	
CODE 121					

TITLE
DETAIL OF HEADER SHIELD

DRAWING NO : 1-19-753-02984

REV 00

DRAWING NO: 1-19-783-02983

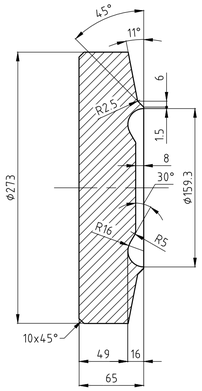

VAR-01: FLAT END COVER

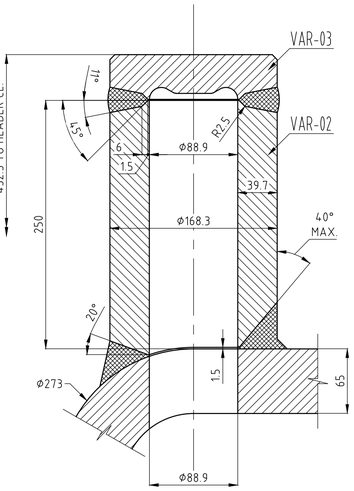

VAR-02: INSPECTION NOZZLE
(DETAIL OF WELDING OF INSPECTION NOZZLE WITH END COVER)

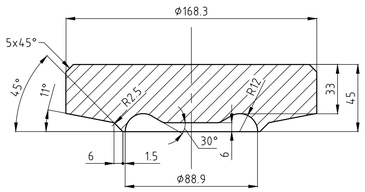

VAR-03: FLAT END COVER

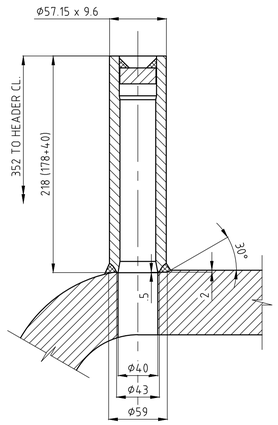

DETAIL OF WELDING NIPPLE (VAR-04) WITH HEADER

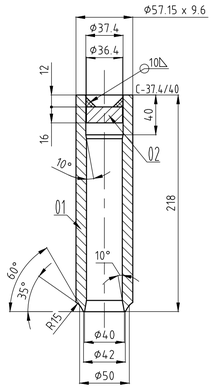

VAR-04: NIPPLE
Φ57.15 x 9.6

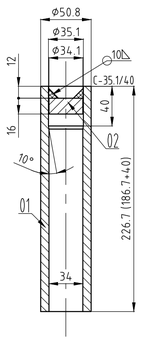

VAR-05: NIPPLE
Φ50.8 x 7.6

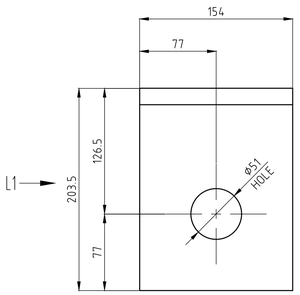

VAR-06: LUG

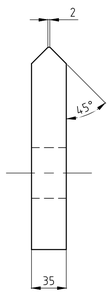

VIEW-L1

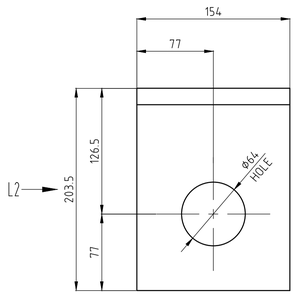

VAR-07: LUG

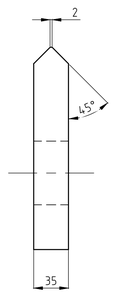

VIEW-L2

VARIANT NUMBER	ITEM NUMBER	DESCRIPTION	STD	DRAWING NUMBER	ITEM NO / VAR NO	MATERIAL CODE / MATERIAL SPECN	A/C/P	UNIT / DI	UNIT WEIGHT / QUANTITY	GS	ZONE
07		LUG 35 THK 154 x 203.5			159421160000	SA515GR70	C		7.420		
06		LUG 35 THK 154 x 203.5			159421160000	SA515GR70	C		7.720		
	02	PLATE 16 THK Φ34.1			150110260000	IS2062GRA	C		0.110 / 1		
	01	TUBE Φ50.8 x 7.62 186.7+40 LONG			154871212501	SA210GRC	A		1.600 / 1		
05		NIPPLE Φ50.8 x 7.6				WELDMENT			1.710		
	02	PLATE 16 THK Φ36.4			150110260000	IS2062GRA	C		0.130 / 1		
	01	TUBE Φ57.15 x 9.6 178 + 40 LONG			154872520001	SA210GRC	A		2.110 / 1		
04		NIPPLE Φ57.2 x 9.6				WELDMENT			2.240		
03		FLAT END COVER Φ168.3; T = 33 (MIN.)			920701750000	SA105	A		6.310		
02		INSPECTION NOZZLE Φ168.3; T = 39.7 (MIN.)			920848000000	SA105	A		31.400		
01		FLAT END COVER Φ273; T = 49 (MIN.)			920700490000	SA105	A		24.930		

REV	DATE	ALTERED :
01		CHD & APPD :
ZONE		

CAUTION: The information on this document is the property of BHARAT HEAVY ELECTRICALS LTD. It must not be used directly or indirectly in any way detrimental to the interest of the company.

TYPE OF PRODUCT OR NAME OF CUSTOMER/PROJECT

Bharat Heavy Electricals Ltd
UNIT: HIGH PRESSURE BOILER PLANT
TIRUCHIRAPALLI – 620014
355-053

	NAME	SIGNATURE	DATE
DRN	SHEEBA.S		13.8.2024
CHD	N.NIRMAL		17.08.2024
APPD	N.NIRMAL		17.08.2024

DEPT: PP
CODE: 121
ALL DIMENSIONS ARE IN MM
PROJECTION
SCALE: N.T.S
WEIGHT (Kg)
REF TO ASSY / OLD DWG

TITLE: DETAILS OF ECON.JUNCTION HEADER (E-07)
DRAWING NO : 1-19-783-02983
REV: 00

DRAWING NO: 1-19-793-02982

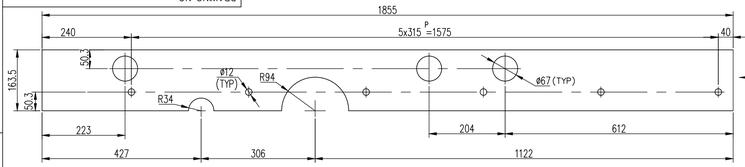

VARIANT No:01
(DEVELOPED VIEW)

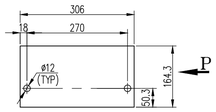

VARIANT No:03
(DEVELOPED VIEW)

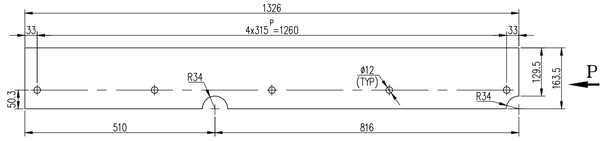

VARIANT No:05
(DEVELOPED VIEW)

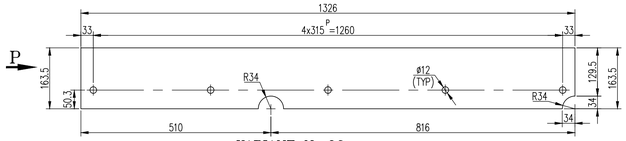

VARIANT No:06
(DEVELOPED VIEW)

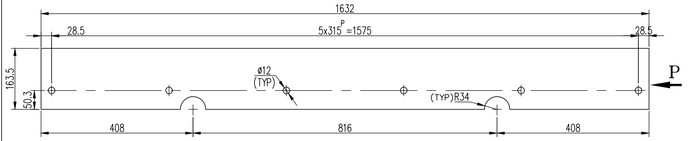

VARIANT No:02
(DEVELOPED VIEW)

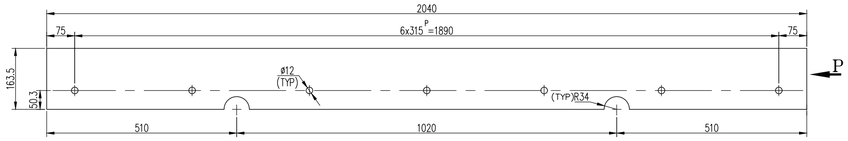

VARIANT No:04
(DEVELOPED VIEW)

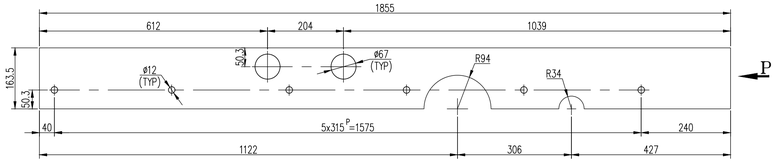

VARIANT No:07
(DEVELOPED VIEW)

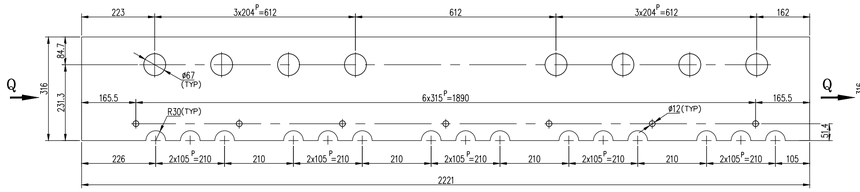

VARIANT No:08
(DEVELOPED VIEW)

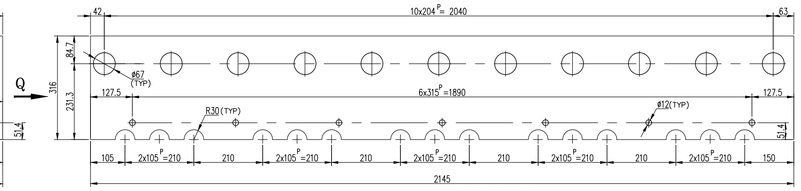

VARIANT No:09
(DEVELOPED VIEW)

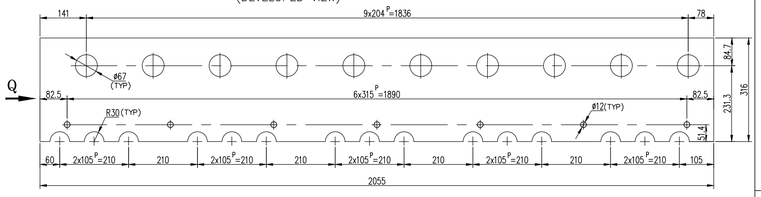

VARIANT No:10
(DEVELOPED VIEW)

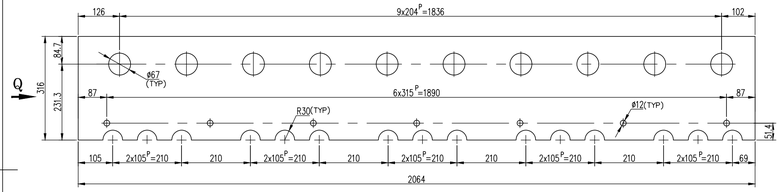

VARIANT No:11
(DEVELOPED VIEW)

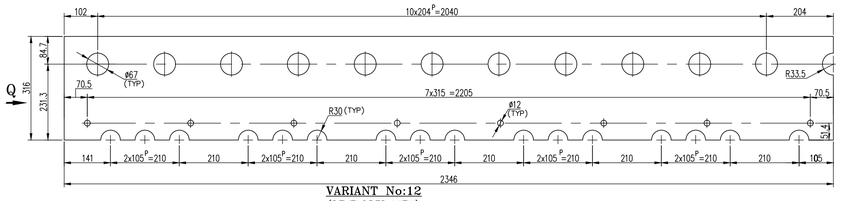

VARIANT No:12
(DEVELOPED VIEW)

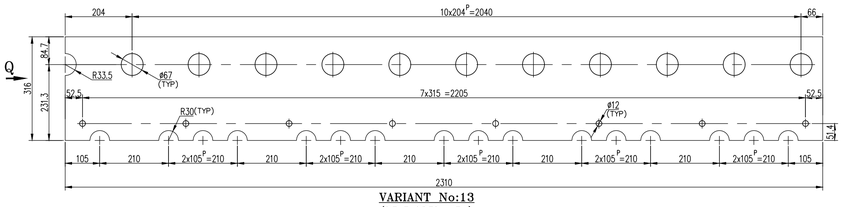

VARIANT No:13
(DEVELOPED VIEW)

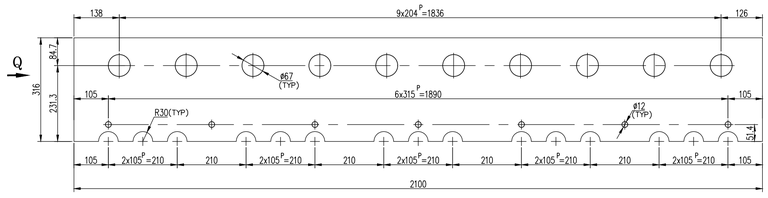

VARIANT No:14
(DEVELOPED VIEW)

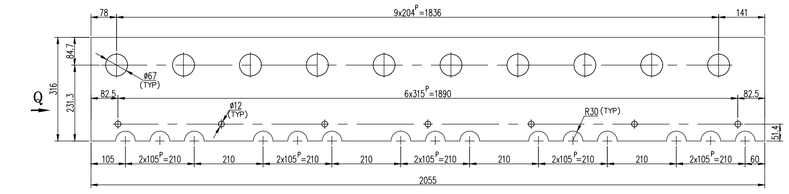

VARIANT No:15
(DEVELOPED VIEW)

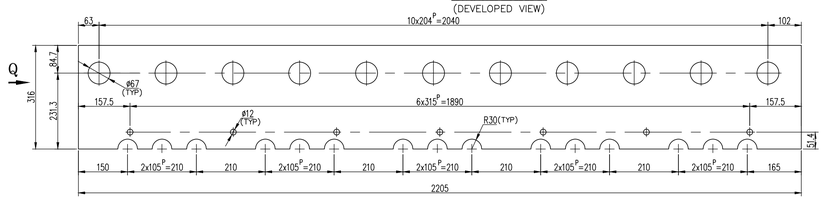

VARIANT No:16
(DEVELOPED VIEW)

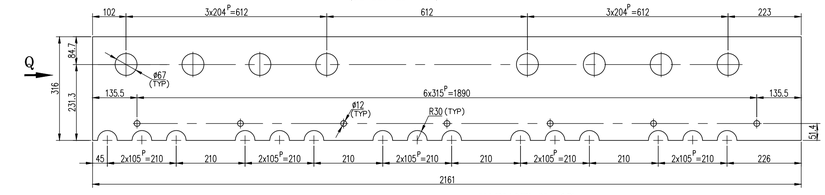

VARIANT No:17
(DEVELOPED VIEW)

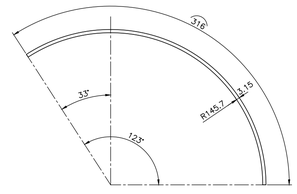

VIEW-Q

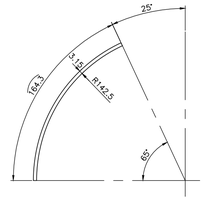

VIEW-P

VARIANT NUMBER	ITEM NUMBER	DESCRIPTION	STD	DRAWING NUMBER	ITEM NO / VAR NO	MATERIAL CODE / MATERIAL SPECN	A/C/P	UNIT / DI	UNIT WEIGHT / QUANTITY	GS	ZONE
	17	HEADER SHIELD SH 3.15 x 316 x 2161			150112710000	SA240TY304	C		16.050		
	16	HEADER SHIELD SH 3.15 x 316 x 2205			150112710000	SA240TY304	C		16.130		
	15	HEADER SHIELD SH 3.15 x 316 x 2055			150112710000	SA240TY304	C		15.050		
	14	HEADER SHIELD SH 3.15 x 316 x 2100			150112710000	SA240TY304	C		15.380		
	13	HEADER SHIELD SH 3.15 x 316 x 2310			150112710000	SA240TY304	C		16.930		
	12	HEADER SHIELD SH 3.15 x 316 x 2346			150112710000	SA240TY304	C		17.210		
	11	HEADER SHIELD SH 3.15 x 316 x 2064			150112710000	SA240TY304	C		15.120		
	10	HEADER SHIELD SH 3.15 x 316 x 2055			150112710000	SA240TY304	C		14.960		
	09	HEADER SHIELD SH 3.15 x 316 x 2145			150112710000	SA240TY304	C		15.660		
	08	HEADER SHIELD SH 3.15 x 316 x 2221			150112710000	SA240TY304	C		16.520		
	07	HEADER SHIELD SH 3.15 x 163.5 x 1855			150112710000	SA240TY304	C		6.950		
	06	HEADER SHIELD SH 3.15 x 163.5 x 1326			150112710000	SA240TY304	C		5.280		
	05	HEADER SHIELD SH 3.15 x 163.5 x 1326			150112710000	SA240TY304	C		5.280		
	04	HEADER SHIELD SH 3.15 x 163.5 x 2040			150112710000	SA240TY304	C		8.130		
	03	HEADER SHIELD SH 3.15 x 163.5 x 306			150112710000	SA240TY304	C		1.230		
	02	HEADER SHIELD SH 3.15 x 163.5 x 1632			150112710000	SA240TY304	C		6.500		
	01	HEADER SHIELD SH 3.15 x 163.5 x 1855			150112710000	SA240TY304	C		6.950		

REV	DATE	ALTERED : SHEEBA S
01	14.11.24	CHD & APPD : N.NIRMAL
ZONE	DRAWING UPDATED.	

CAUTION: The information on this document is the property of BHARAT HEAVY ELECTRICALS LTD. It must not be used directly or indirectly in any way detrimental to the interest of the company.

TYPE OF PRODUCT
OR NAME OF
CUSTOMER/PROJECT

Bharat Heavy Electricals Ltd
UNIT: HIGH PRESSURE BOILER PLANT
TIRUCHIRAPALLI – 620014

355-053

	NAME	SIGNATURE	DATE
DRN	SHEEBA S		27.08.2024
CHD	N.NIRMAL		28.08.2024
APPD	N.NIRMAL		28.08.2024

DEPT	ALL DIMENSIONS ARE IN MM	PROJECTION	SCALE	WEIGHT (Kg)	REF TO ASSY / OLD DWG
PP (CODE 121)			NTS	–	

TITLE: DETAILS OF HEADER SHIELDS(E-07D)

DRAWING NO : 1-19-793-02982 REV 01

CORPORATE DRG ID:TP-DG-2-10-135-00617/00
2-10-135-00617

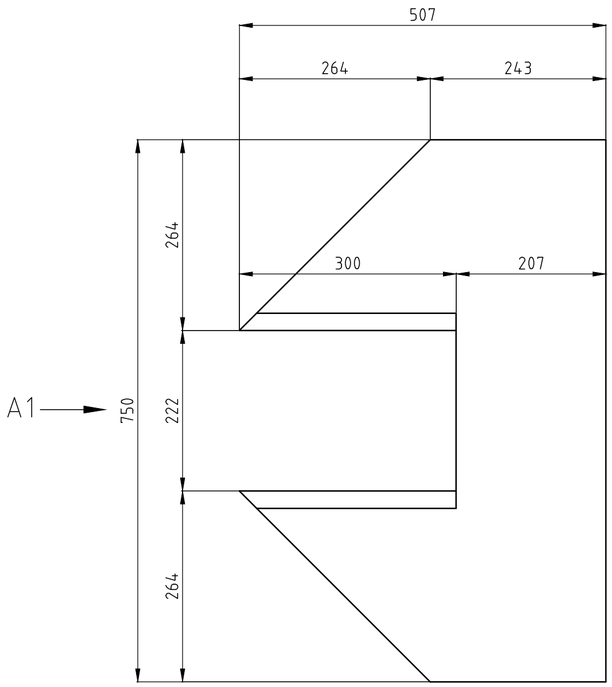

VAR-01: SUPPORT PLATE

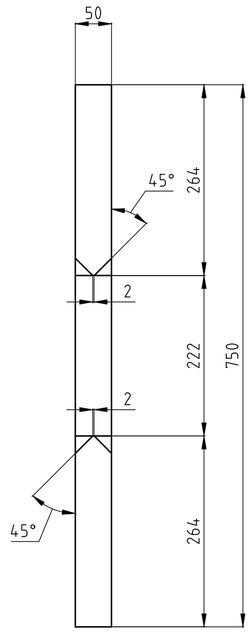

VIEW-A1

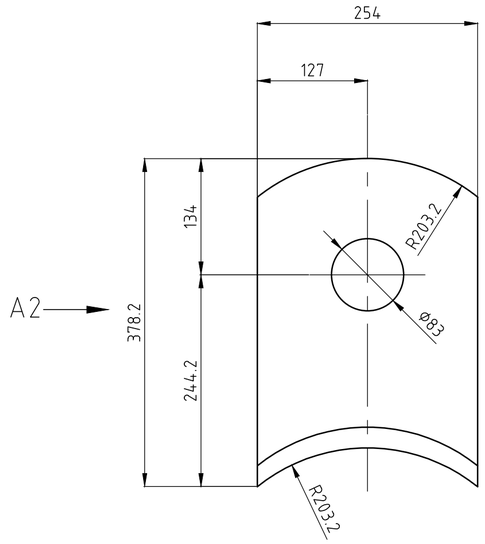

VAR-02: LUG

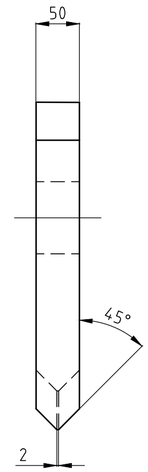

VIEW-A2

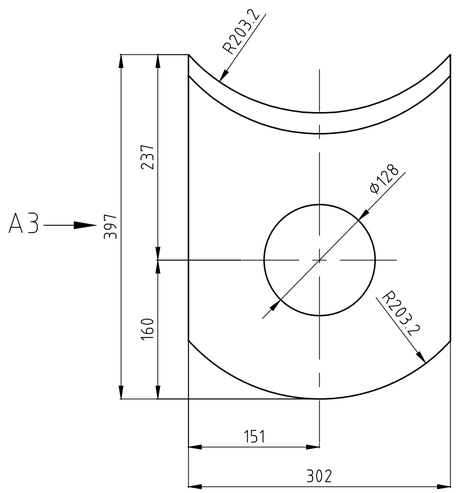

VAR-03: LUG

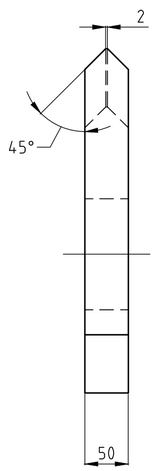

VIEW-A3

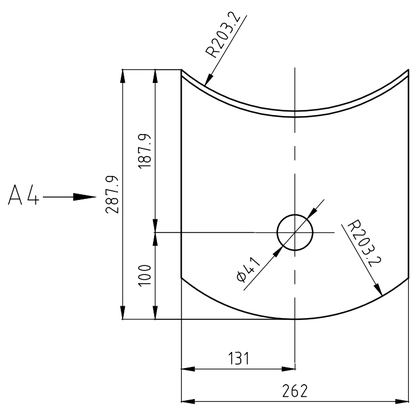

VAR-04: LUG

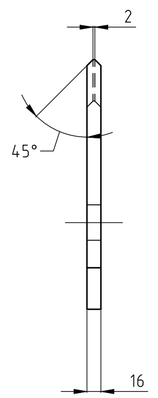

VIEW-A4

VARIANT NUMBER	ITEM NUMBER	DESCRIPTION	STD	DRAWING NUMBER	ITEM NO / VAR NO	MATERIAL CODE / MATERIAL SPECN	A/C/P	UNIT / DI	UNIT WEIGHT / QUANTITY	GS	ZONE
04		LUG 16 x 262 x 287.9				150422810000	C		7.620		
						SA387GR12CL2					
03		LUG 50 x 302 x 397				150422860000	C		32.520		
						SA387GR12CL2					
02		LUG 50 x 254 x 378.2				150422860000	C		29.900		
						SA387GR12CL2					
01		SUPPORT PLATE 50 x 507 x 750				150422860000	C		93.110		
						SA387GR12CL2					

REV	DATE	ALTERED :
01		CHD & APPD :
ZONE		

CAUTION: The information on this document is the property of BHARAT HEAVY ELECTRICALS LTD. It must not be used directly or indirectly in any way detrimental to the interest of the company.

TYPE OF PRODUCT OR NAME OF CUSTOMER/PROJECT

Bharat Heavy Electricals Ltd
UNIT: HIGH PRESSURE BOILER PLANT
TIRUCHIRAPALLI – 620014
355-054

	NAME	SIGNATURE	DATE
DRN	SAIKUMAR		04.06.2024
CHD	NIRMAL RAJ		06.06.2024
APPD	NIRMAL RAJ		06.06.2024

DEPT PP | CODE 121 | ALL DIMENSIONS ARE IN MM | PROJECTION | SCALE NTS | WEIGHT (Kg) | REF TO ASSY / OLD DWG

TITLE: DETAILS OF ATTACHMENTS IN S-09A

DRAWING NO : 2-10-135-00617 | RE 00

CORPORATE DRG ID:TP-DG-2-10-135-00617/00

DRAWING NO: 2-15-136-00125

FOR TOLERANCES OF UNTOLERANCED DIMENSIONS DURING MANUFACTURE REFER PLANT STD. NO TP 023 0299

NOTES:
1. DESIGN, MANUFACTURING AND INSPECTION AS PER IBR
2. HEAT TREATMENT AS PER IBR
3. DESIGN PRESSURE IS 71 kg/cm^2
4. DESIGN TEMPERATURE IS 418 °C
5. BUTT WELD EDGE PREPARATION AS PER DETAIL - C.

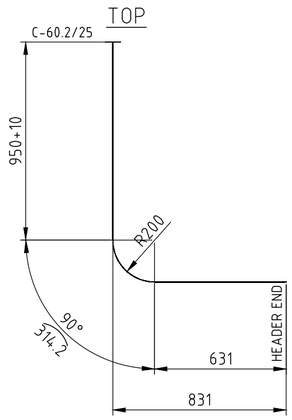

VAR-01
MARK NO:"R-03-1"

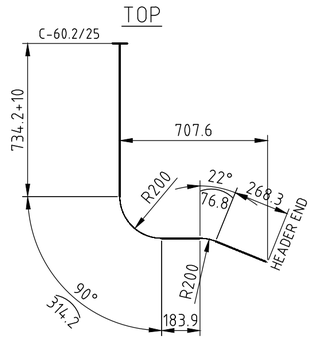

VAR-02
R-03-2

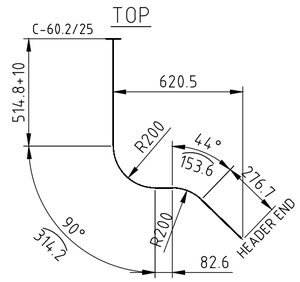

VAR-03
R-03-3

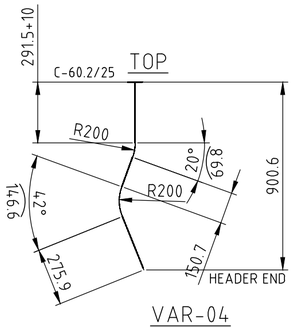

VAR-04
R-03-4

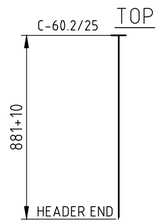

VAR-05
R-03-5

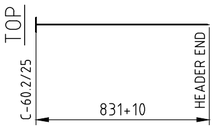

VAR-06
R-03-6

VARIANT NUMBER	ITEM NUMBER	DESCRIPTION	STD	DRAWING NUMBER	ITEM NO / VAR NO	MATERIAL CODE / MATERIAL SPECN	A/C/P	UNIT / DI	UNIT WEIGHT / QUANTITY	GS	ZONE
08		TUBE Φ69.85 X 4.57 L=998.8+10 LONG				154881930001 SA 213 T11	A		7.825 1		
07		TUBE Φ69.85 X 4.57 L=872+10 LONG				154881930001 SA 213 T11	A		6.830 1		
06		TUBE Φ69.85 X 4.57 L=831+10 LONG				154881930001 SA 213 T11	A		6.509 1		
05		TUBE Φ69.85 X 4.57 L=881+10 LONG				154881930001 SA 213 T11	A		6.901 1		
04		TUBE Φ69.85 X 4.57 L=934.5+10 LONG				154881930001 SA 213 T11	A		7.324 1		
03		TUBE Φ69.85 X 4.57 L=1341.8+10 LONG				154881930001 SA 213 T11	A		10.512 1		
02		TUBE Φ69.85 X 4.57 L=1577.3+10 LONG				154881930001 SA 213 T11	A		12.353 1		
01		TUBE Φ69.85 X 4.57 L=1895.2+10 LONG				154881930001 SA 213 T11	A		14.844 1		

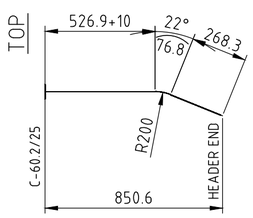

VAR-07
R-03-7

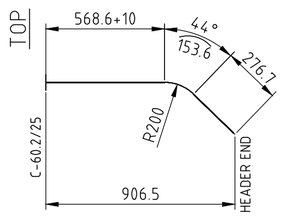

VAR-08
R-03-8

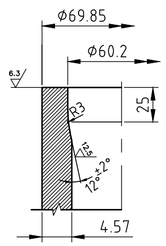

DETAIL-C

REV	DATE	ALTERED : VENKAT D
01	03.09.24	CHD & APPD : SAK
ZONE	VAR-06 LENGTH CORRECTED	

CAUTION: The information on this document is the property of BHARAT HEAVY ELECTRICALS LTD. It must not be used directly or indirectly in any way detrimental to the interest of the company.

TYPE OF PRODUCT OR NAME OF CUSTOMER/PROJECT

Bharat Heavy Electricals Ltd
UNIT: HIGH PRESSURE BOILER PLANT
TIRUCHIRAPALLI – 620014
355-054

	NAME	SIGNATURE	DATE
DRN	VENKAT D		27.08.2024
CHD	VENKAT D		27.08.2024
APPD	NIRMALRAJ N		28.08.2024

DEPT	ALL DIMENSIONS ARE IN MM	PROJECTION	SCALE	WEIGHT (Kg)	REF TO ASSY / OLD DWG
PP CODE 121			N.T.S	-	PPA MODEL R-00/REV 03

TITLE: LTRH INLET TERM TUBES

DRAWING NO : 2-15-136-00125

REV 01

DRAWING NO: 2-15-136-00126

FOR TOLERANCES OF UNTOLERANCED DIMENSIONS DURING MANUFACTURE REFER PLANT STD. NO TP 023 0299

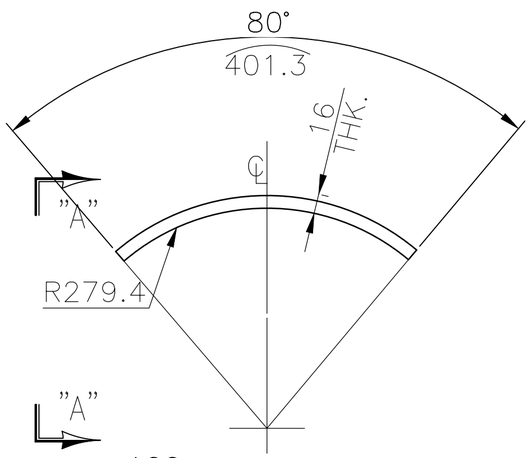

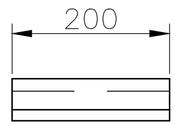

VIEW A–A

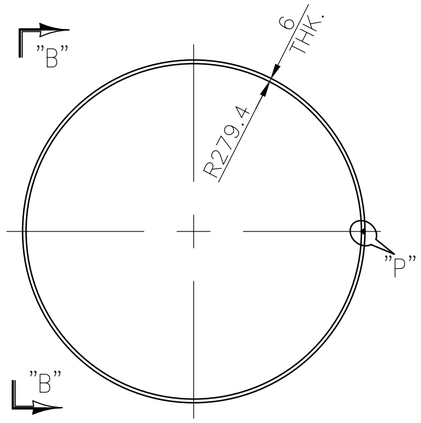

DETAIL OF VAR 02

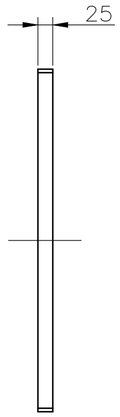

VIEW B–B

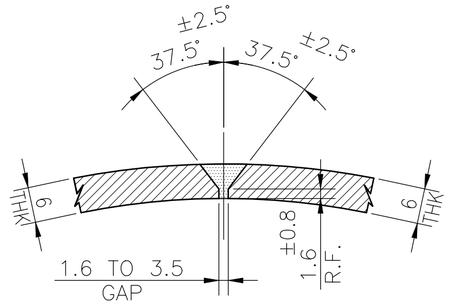

ENLARGED DETAIL AT 'P'

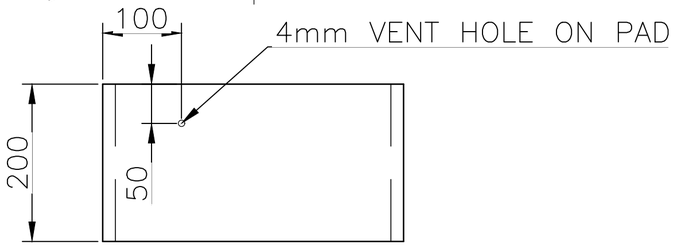

DETAIL OF VAR 01

VARIANT NUMBER	ITEM NUMBER	DESCRIPTION	STD	DRAWING NUMBER	ITEM NO / VAR NO	MATERIAL CODE / MATERIAL SPECN	A/C/P	UNIT / DI	UNIT WEIGHT / QUANTITY	GS	ZONE
02		THK.FLAT RING 1774.4x25x6				159422770000			2.090		
						SA387Gr.12CL.2			1		
01		THK.PAD 401.3x200x16				150422810000			XXXX		
						SA387Gr.12CL.2			1		

NOTES :

1. WELDING TO BE DONE AFTER FITTING WITH HEADER.
2. FOR DETAIL DRAWING REFER DWG NO. 0–15–136–00418

REV	DATE	ALTERED :
01		CHD & APPD :
ZONE		

CAUTION: The information on this document is the property of BHARAT HEAVY ELECTRICALS LTD. It must not be used directly or indirectly in any way detrimental to the interest of the company.

TYPE OF PRODUCT OR NAME OF CUSTOMER/PROJECT

Bharat Heavy Electricals Ltd
UNIT: HIGH PRESSURE BOILER PLANT
TIRUCHIRAPALLI – 620014
355–054

	NAME	SIGNATURE	DATE
DRN	VENKAT D		27.08.2024
CHD	VENKAT D		27.08.2024
APPD	NIRMALRAJ N		28.08.2024

DEPT	ALL DIMENSIONS ARE IN MM	PROJECTION	SCALE	WEIGHT (Kg)	REF TO ASSY / OLD DWG
PP / CODE 121			N.T.S	-	PPA MODEL R-00/REV 04

TITLE: ATTACH. ON LTRH INLET HEADER (R-03)

DRAWING NO : 2-15-136-00126

REV 00

DRAWING NO: 3-05-137-01296

FOR TOLERANCES OF UNTOLERANCED DIMENSIONS DURING MANUFACTURE REFER PLANT STD.NO TP 023 0299

NOTES:

01. DESIGN, MANUFACTURE AND INSPECTION AS PER I.B.R.
02. DESIGN PRESSURE & TEMPERATUREAS REFER ASSY. DRAWING

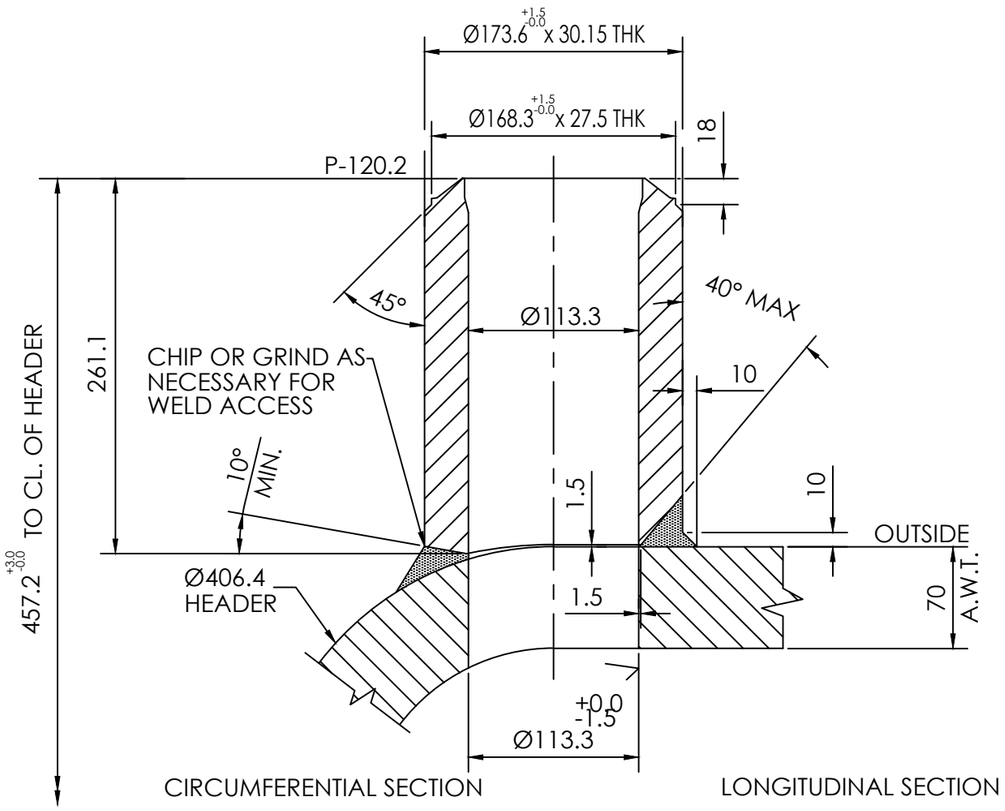

WELD DETAIL OF DRAIN NOZZLE

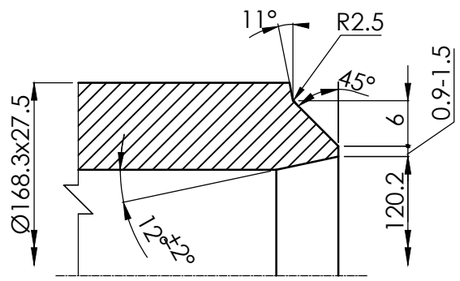

DETAIL–P

VARIANT NUMBER	ITEM NUMBER	DESCRIPTION	STD	DRAWING NUMBER	ITEM NO	MATERIAL CODE	A/C/P	UNIT	UNIT WEIGHT	GS
		DRAIN NOZZLE Ø168.3X22.75(MIN);L=261.1				920840810000	A		137.000	
					VAR NO	SA105		DI	QUANTITY	

CAUTION: The information on this document is the property of BHARAT HEAVY ELECTRICALS LTD. It must not be used directly or indirectly in any way detrimental to the interest of the company.

TYPE OF PRODUCT OR NAME OF CUSTOMER/PROJECT

Bharat Heavy Electricals Ltd
UNIT: HIGH PRESSURE BOILER PLANT
TIRUCHIRAPALLI – 620014
355–055

	NAME	SIGNATURE	DATE
DRN	VENKAT D		26.07.2024
CHD	VENKAT D		27.07.2024
APPD	NIRMALRAJ		27.07.2024

REV	DATE	ALTERED :
01		CHD & APPD:
ZONE		

DEPT	PP	ALL DIMENSIONS ARE IN MM	PROJECTION	SCALE	WEIGHT (Kg)	REF TO ASSY / OLD DWG
CODE	121			NTS	137.000	

TITLE: DRAIN NOZZLE

DRAWING NO : 3-05-137-01296

REV 00

DRAWING No.: 3-05-155-01265

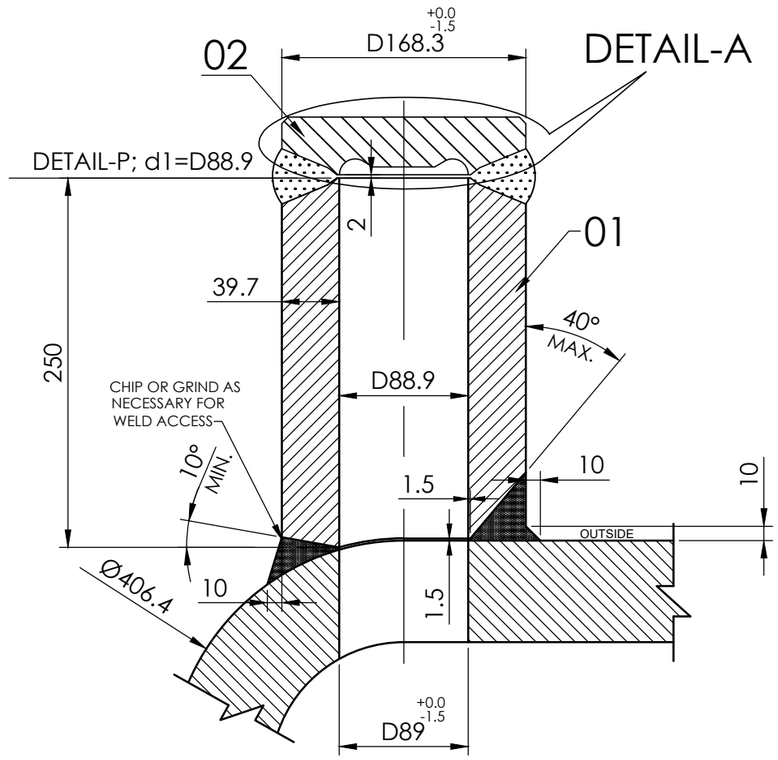

CIRCUMFERNTIAL SECTION

LONGITUDINAL SECTION

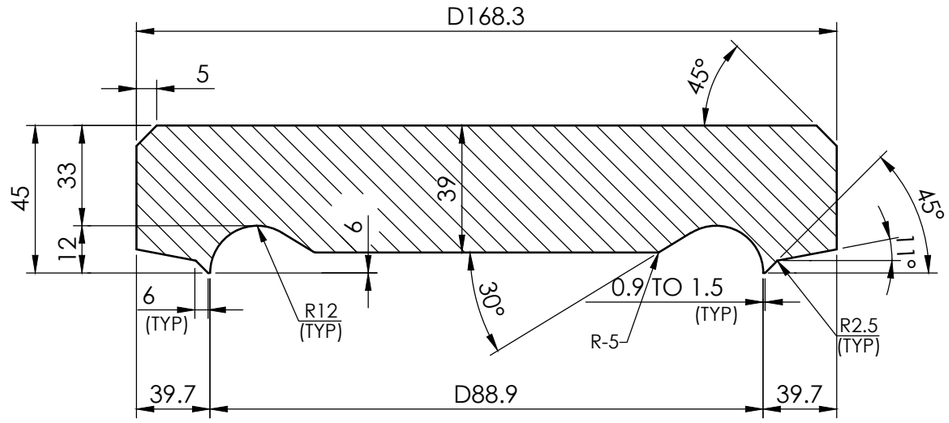

DETAIL-A

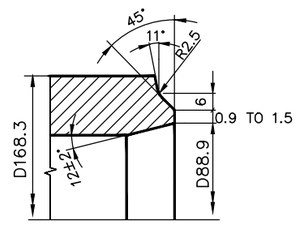

DETAIL-P

VARIANT NUMBER	ITEM NUMBER	DESCRIPTION	STD	DRAWING NUMBER	ITEM No. / VAR No.	MATERIAL CODE / MATERIAL SPECN	A/C/P	UNIT / DI	UNIT WEIGHT / QUANTITY	GS
02		FLAT END COVER D 168.3 X 45 (NOM)				92 070 175 0000 / SA 105	A		8.000	
01		INSPECTION NOZZLE D 168.3 X 39.7 (MIN)				92 084 800 0000 / SA 105	A		31.500	

NOTES:-

01. DESIGN, MANUFACTURE AND INSPECTION AS PER I.B.R.
02. FOR DESIGN PARAMETERS REFER ASSY. DWG.

REV	DATE	ALTERED :
01		CHD & APPD:
ZONE		

CAUTION: The information on this document is the property of BHARAT HEAVY ELECTRICALS LTD. It must not be used directly or indirectly in any way detrimental to the interest of the company.

TYPE OF PRODUCT OR NAME OF CUSTOMER/PROJECT

Bharat Heavy Electricals Ltd
UNIT: HIGH PRESSURE BOILER PLANT
TIRUCHIRAPALLI - 620014
361-320

	NAME	SIGNATURE	DATE
DRN	M BASEEM		02.08.2021
CHD	R.SAI KUMAR		04.08.2021
APPD	NIRMAL RAJ		04.08.2021

DEPT	CODE	ALL DIMENSIONS ARE IN MM	PROJECTION	SCALE	WEIGHT (Kg)	REF TO ASSY / OLD DWG
PP	121			N.T.S	---	

TITLE: INSPECTION NOZZLE AND FLAT END COVER

DRAWING No. : 3-05-155-01265

REV: 00

CORPORATE DRG ID:TP-DG-3-05-155-01265/00CORP

DRAWING NO: 3-05-231-01108

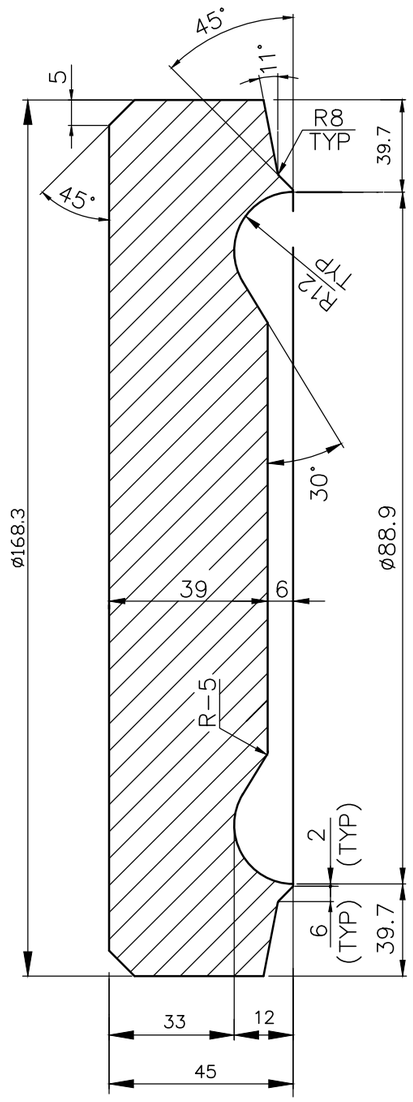

NOTES:

1. FOR DESIGN PARAMETERS REFER ASSY DWG.
2. DESIGN,MANUFACTURING AND INSPECTION AS PER IBR.

VARIANT NUMBER	ITEM NUMBER	DESCRIPTION	STD	DRAWING NUMBER	ITEM NO	MATERIAL CODE	A/C/P	UNIT	UNIT WEIGHT	GS
		FLAT END COVER D168.3 x 45(NOM)				920701760000	A		5.800	
					VAR NO	SA182 F12CL2		DI	QUANTITY	

CAUTION: The information on this document is the property of BHARAT HEAVY ELECTRICALS LTD. It must not be used directly or indirectly in any way detrimental to the interest of the company.

TYPE OF PRODUCT OR NAME OF CUSTOMER/PROJECT

355-055

Bharat Heavy Electricals Ltd
UNIT: HIGH PRESSURE BOILER PLANT
TIRUCHIRAPALLI – 620014

	NAME	SIGNATURE	DATE
DRN	T.Mayakrishnan		24.06.15
CHD	R.Natarajan		25.06.15
APPD	R.Natarajan		25.06.15

REV	DATE	ALTERED :
01		CHD & APPD:
ZONE		

DEPT	CODE	ALL DIMENSIONS ARE IN MM	PROJECTION	SCALE	WEIGHT (Kg)	REF TO ASSY / OLD DWG
PP	121			NTS	5.800	

TITLE
FLAT END COVER
D168.3 x 45(NOM)

DRAWING NO : 3-05-231-01108

REV 00

DRAWING NO: 3-10-135-10024

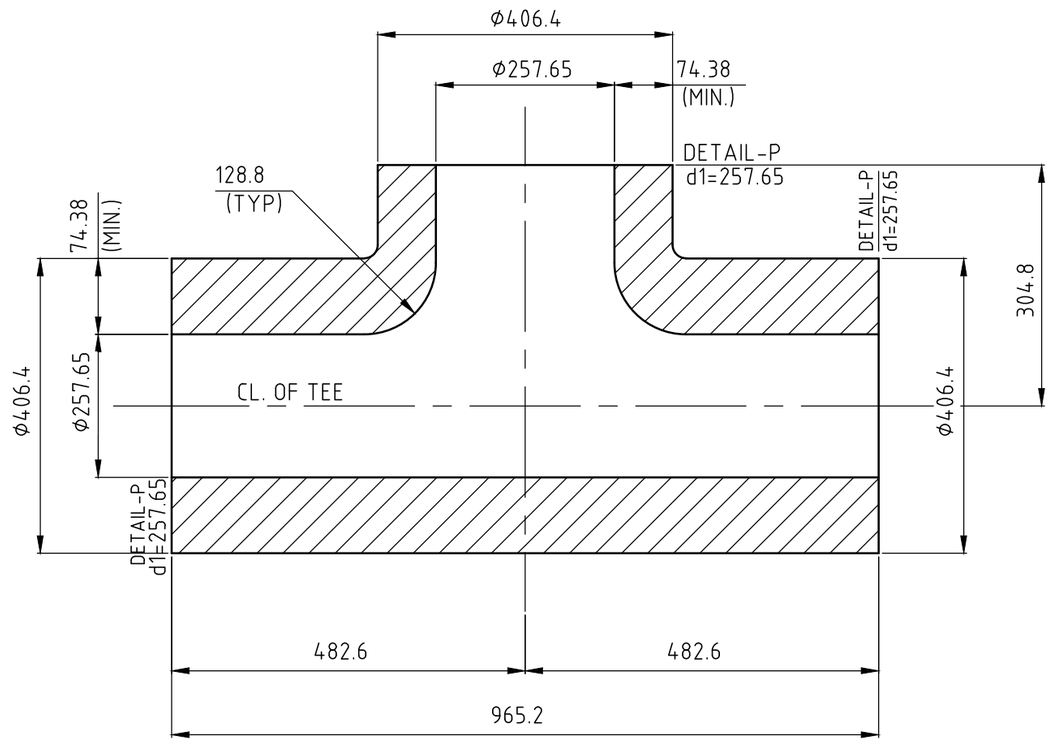

NOTES:

1. DESIGN, MANUFACTURE AND INSPECTION AS PER IBR.
2. FOR DESIGN PARAMETERS REFER ASSEMBLY DRAWING
3. ALL DIMENSIONS SHOWN ARE FINISHED DIMENSIONS.
4. FITTING SPECIFICATION: SA234WP12CL1
5. RAW FORMING AS PER 3-10-000-09863

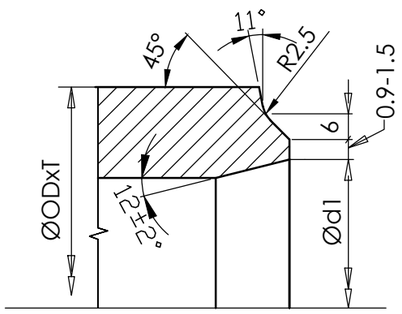

DETAIL-P

VARIANT NUMBER	ITEM NUMBER	DESCRIPTION	STD	DRAWING NUMBER			A/C/P	UNIT		GS
		EQUAL TEE D406.4X85/ D406.4X85				921052930000	A		677.000	
						SA234WP12CL1				
					ITEM NO	MATERIAL CODE		UNIT	UNIT WEIGHT	
					VAR NO	MATERIAL SPECN		DI	QUANTITY	

CAUTION: The information on this document is the property of BHARAT HEAVY ELECTRICALS LTD. It must not be used directly or indirectly in any way detrimental to the interest of the company.

TYPE OF PRODUCT OR NAME OF CUSTOMER/PROJECT

355-055

Bharat Heavy Electricals Ltd
UNIT: HIGH PRESSURE BOILER PLANT
TIRUCHIRAPALLI – 620014

	NAME	SIGNATURE	DATE
DRN	SAROJ KR		08.06.23
CHD	SAI KUMAR		09.06.23
APPD	NIRMAL RAJ		09.06.23

REV	DATE	ALTERED :
01		CHD & APPD:
ZONE		

DEPT	CODE	ALL DIMENSIONS ARE IN MM	PROJECTION	SCALE	WEIGHT (Kg)	REF TO ASSY / OLD DWG
PP	121			N.T.S	677.000	3-10-000-09863

TITLE
EQUAL TEE
Φ406.4X85(NOM.)/ Φ406.4X85(NOM.)

DRAWING NO : 3-10-135-10024

REV 00

CORPORATE DRG ID:TP-DG-3-10-135-10024/00CORP

DRAWING NO: 3-10-135-10025

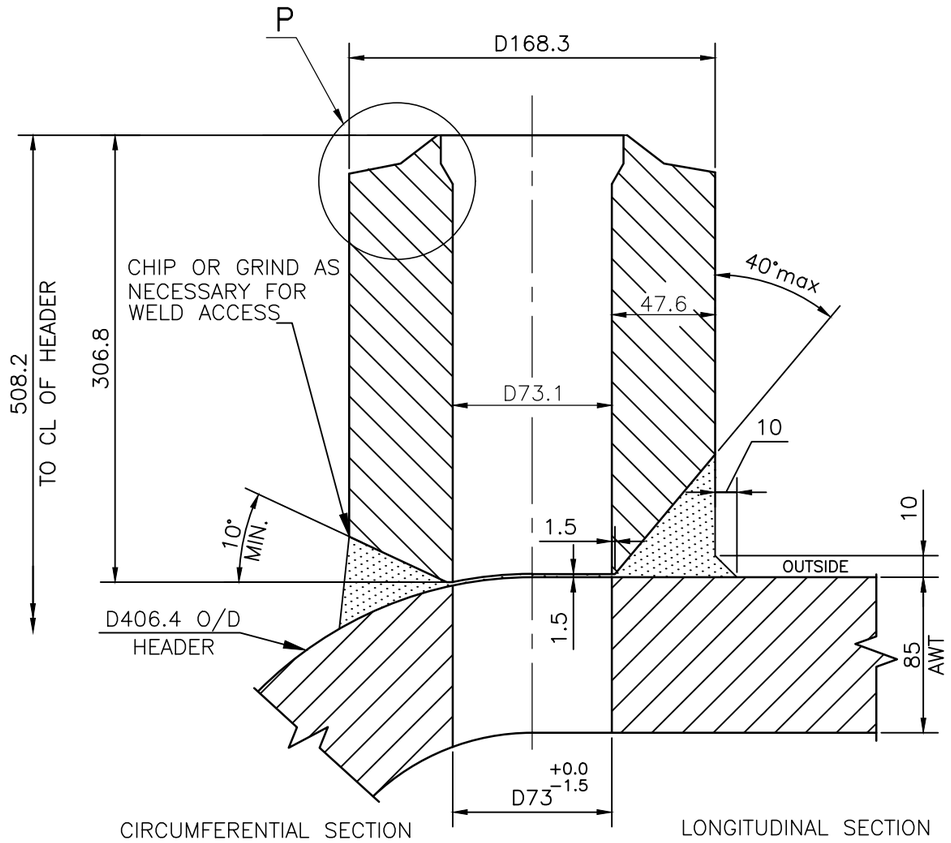

WELD DETAIL OF NOZZLE

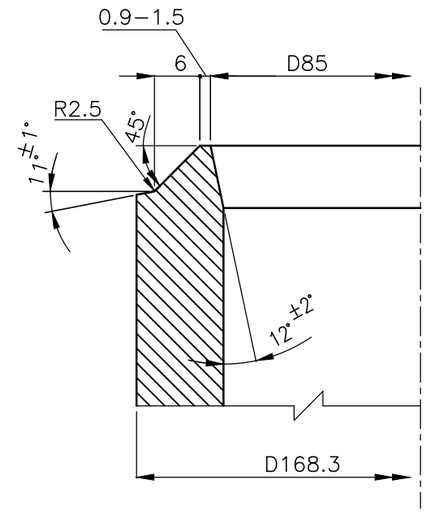

DETAIL−P

		NOZZLE D168.3x47.6(MIN) L=306.8				92084176000	A		43.200	
						SA 182 F12 CL2				
VARIANT NUMBER	ITEM NUMBER	DESCRIPTION	STD	DRAWING NUMBER	ITEM NO	MATERIAL CODE	A/C/P	UNIT	UNIT WEIGHT	CS
					VAR NO	MATERIAL SPECN		DI	QUANTITY	

NOTE:−

01. DESIGN,MANUFACTURING AND INSPECTION AS PER I.B.R.
02. FOR DESIGN PARAMETERS REFER ASSY. DWG

REV	DATE	ALTERED :
		CHD & APPD:
ZONE		

CAUTION: The information on this document is the property of BHARAT HEAVY ELECTRICALS LTD. It must not be used directly or indirectly in any way detrimental to the interest of the company.

TYPE OF PRODUCT
OR NAME OF
CUSTOMER/PROJECT

Bharat Heavy Electricals Ltd
UNIT: HIGH PRESSURE BOILER PLANT
TIRUCHIRAPALLI − 620014
355−055

	NAME	SIGNATURE	DATE
DRN	SAROJ KR		08.06.2023
CHD	R.SAI KUMAR		09.06.2023
APPD	R.SAI KUMAR		09.06.2023

DEPT	CODE	ALL DIMENSIONS ARE IN MM	PROJECTION	SCALE	WEIGHT (Kg)	REF TO ASSY / OLD DWG
PP	121			N.T.S.	43.200	3−10−135−09756

TITLE: NOZZLE D168.3x47.6(MIN)

DRAWING NO : 3−10−135−10025

REV: 00

DRAWING NO: 3-10-135-10058

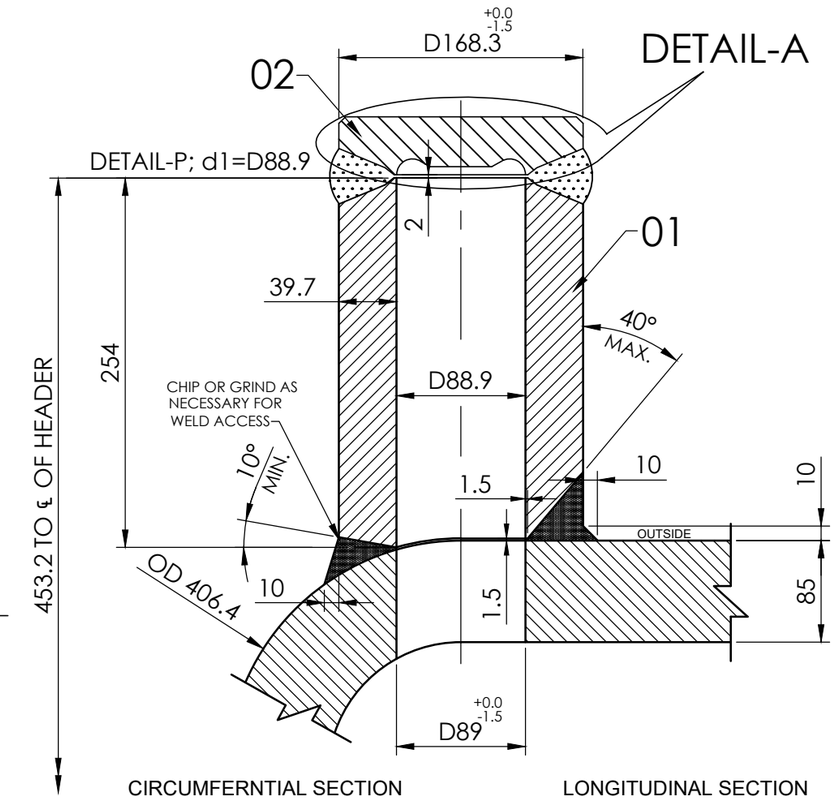

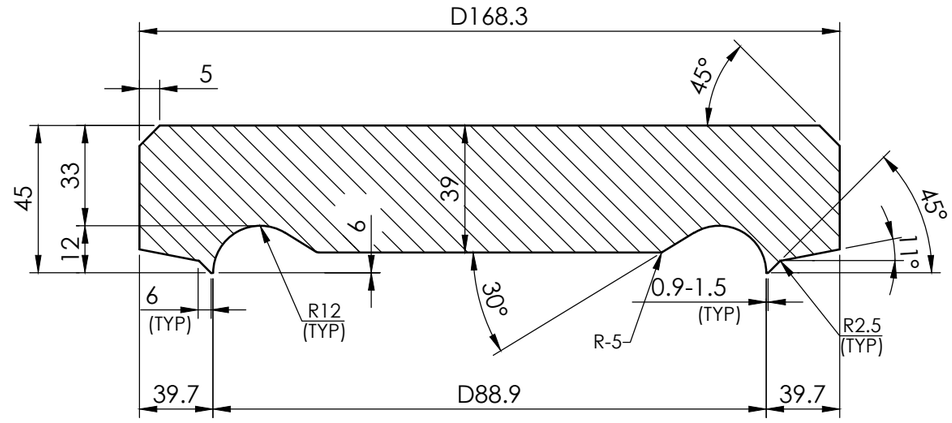

DETAIL-A

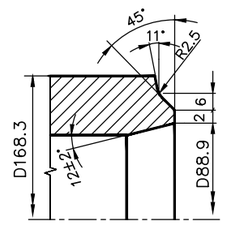

DETAIL-P

VARIANT NUMBER	ITEM NUMBER	DESCRIPTION	STD	DRAWING NUMBER	ITEM NO / VAR NO	MATERIAL CODE / MATERIAL SPECN	A/C/P	UNIT / DI	UNIT WEIGHT / QUANTITY	GS
02		FLAT END COVER D168.3 x 45(NOM)				92 070 176 0000	A		12.300	
						SA 182 F12 CL2				
01		INSPECTION NOZZLE D168.3x39.7(MIN) L=254				92 084 697 0000	A		36.950	
						SA 182 F12 CL2				

NOTES:-

01. DESIGN, MANUFACTURE AND INSPECTION AS PER I.B.R
02. FOR DESIGN PRESSURE & TEMPERATURE REFER MAIN ASSEMBLY DRAWING.

REV	DATE	ALTERED :
01		CHD & APPD:
ZONE		

CAUTION: The information on this document is the property of BHARAT HEAVY ELECTRICALS LTD. It must not be used directly or indirectly in any way detrimental to the interest of the company.

TYPE OF PRODUCT OR NAME OF CUSTOMER/PROJECT

Bharat Heavy Electricals Ltd
UNIT: HIGH PRESSURE BOILER PLANT
TIRUCHIRAPALLI – 620014
355–055

	NAME	SIGNATURE	DATE
DRN	SAROJ KUMAR		18.06.2023
CHD	R.SAI KUMAR		19.06.2023
APPD	R.SAI KUMAR		19.06.2023

DEPT	CODE	ALL DIMENSIONS ARE IN MM	PROJECTION	SCALE	WEIGHT (Kg)	REF TO ASSY / OLD DWG
PP	121			NTS	-------	3–10–135–09758

TITLE: INSPECTION NOZZLE AND FLAT END COVER

DRAWING NO : 3-10-135-10058

REV 00

DRAWING NO: 3-10-135-10106

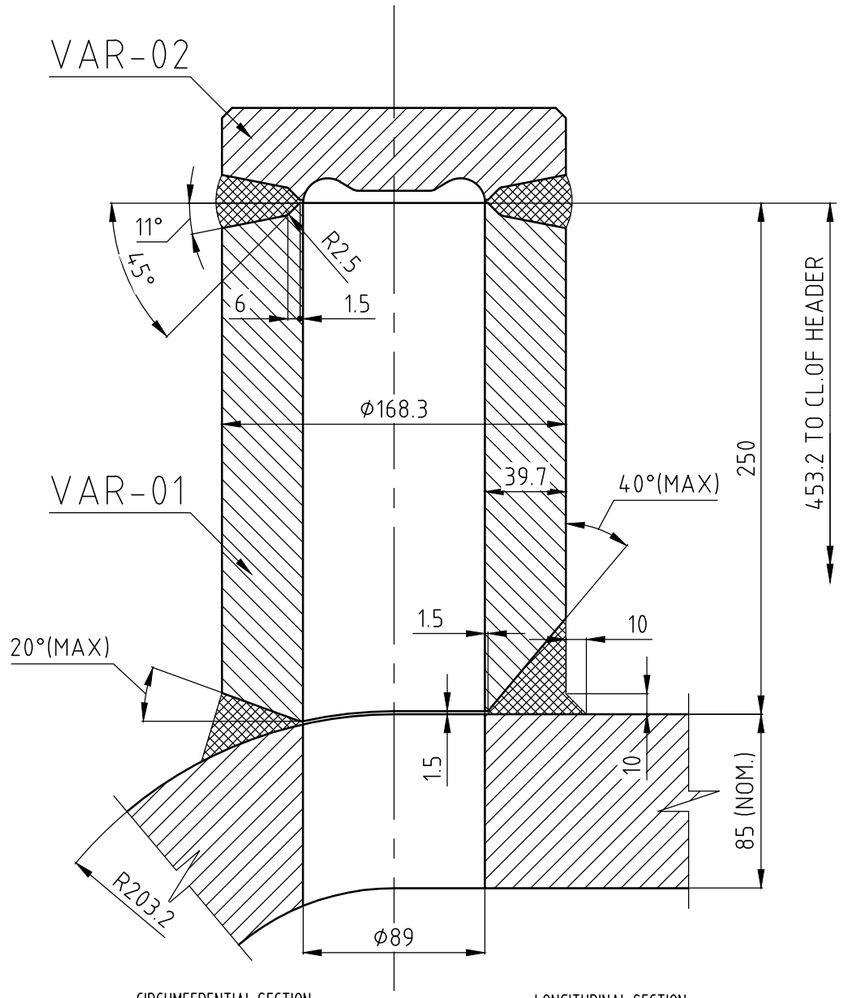

CIRCUMFERENTIAL SECTION

LONGITUDINAL SECTION

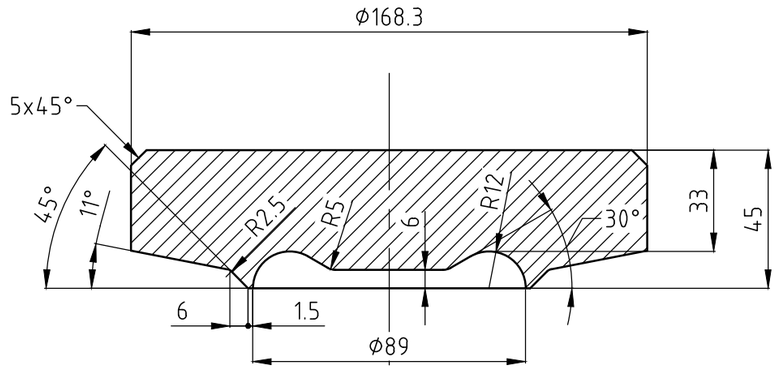

DETAIL OF VAR-02

NOTES:

1. DESIGN, MANUFACTURE AND INSPECTION AS PER IBR.
2. FOR DESIGN PARAMETERS REFER ASSEMBLY DRAWING.

VARIANT NUMBER	ITEM NUMBER	DESCRIPTION	STD	DRAWING NUMBER	ITEM NO / VAR NO	MATERIAL CODE / MATERIAL SPECN	A/C/P	UNIT / DI	UNIT WEIGHT / QUANTITY	GS
02		FLAT END COVER ϕ168.3; T=33 (MIN.)				920701760000 / SA182F12CL2	A		6.340	
01		INSPECTION NOZZLE ϕ168.3; T=39.7 (MIN.)				920846970000 / SA182F12CL2	A		29.800	

CAUTION: The information on this document is the property of BHARAT HEAVY ELECTRICALS LTD. It must not be used directly or indirectly in any way detrimental to the interest of the company.

TYPE OF PRODUCT OR NAME OF CUSTOMER/PROJECT

355-055

Bharat Heavy Electricals Ltd
UNIT: HIGH PRESSURE BOILER PLANT
TIRUCHIRAPALLI – 620014

	NAME	SIGNATURE	DATE
DRN	SAIKUMAR		04.06.2024
CHD	NIRMAL RAJ		06.06.2024
APPD	NIRMAL RAJ		06.06.2024

REV	DATE	ALTERED :
01		CHD & APPD:
ZONE		

DEPT PP | CODE 121 | ALL DIMENSIONS ARE IN MM | PROJECTION | SCALE NTS | WEIGHT (Kg) --- | REF TO ASSY / OLD DWG

TITLE: INSPECTION NOZZLE AND END COVER

DRAWING NO : 3-10-135-10106

RE 00

CORPORATE DRG ID:TP-DG-3-10-135-10106/00CORPOR

DRAWING NO: 3-10-176-10021

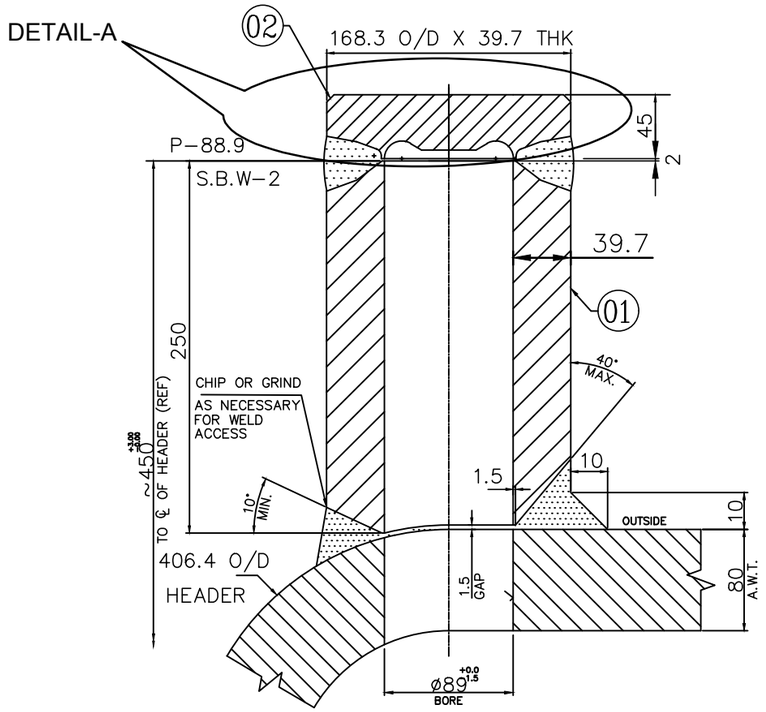

CIRCUMFERENTIAL SECTION

LONGITUDINAL SECTION

WELD DETAIL OF INSPECTION NOZZLE AND END COVER FOR INSPECTION NOZZLE.

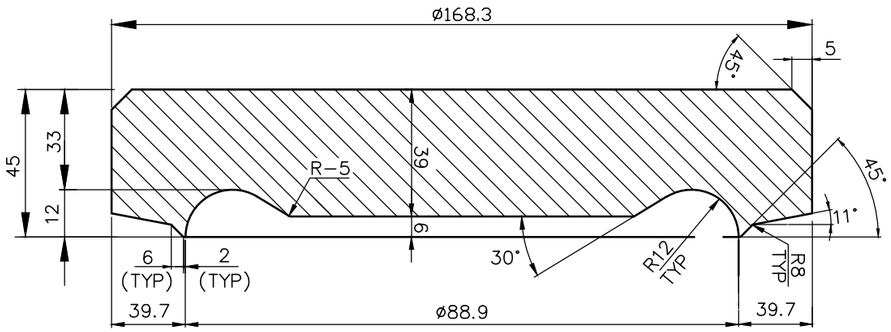

DETAIL-A

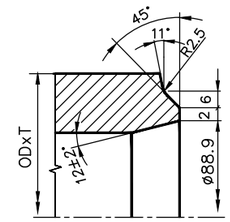

DETAIL-P

NOTES:

1. FOR DESIGN PARAMETERS REFER ASSY DWG.
2. DESIGN,MANUFACTURING AND INSPECTION AS PER IBR.

VARIANT NUMBER	ITEM NUMBER	DESCRIPTION	STD	DRAWING NUMBER	ITEM NO / VAR NO	MATERIAL CODE / MATERIAL SPECN	A/C/P	UNIT / DI	UNIT WEIGHT / QUANTITY	CS
02		FLAT END COVER D168.3,T(MIN)=33				920701760000 / SA182F12CL2	A		7.850	
01		INSPECTION NOZZLE D168.3x39.7(MIN)				920846970000 / SA 182F12CL2	A		31.400	

CAUTION: The information on this document is the property of BHARAT HEAVY ELECTRICALS LTD. It must not be used directly or indirectly in any way detrimental to the interest of the company.

TYPE OF PRODUCT OR NAME OF CUSTOMER/PROJECT

Bharat Heavy Electricals Ltd
UNIT: HIGH PRESSURE BOILER PLANT
TIRUCHIRAPALLI – 620014
355–055

	NAME	SIGNATURE	DATE
DRN	T.SHYJU		31.05.2023
CHD	NIRMAL RAJ		31.05.2023
APPD	NIRMAL RAJ		31.05.2023

REV	DATE	ALTERED :
01		CHD & APPD:
ZONE		

DEPT PP | CODE 121 | ALL DIMENSIONS ARE IN MM | PROJECTION | SCALE NTS | WEIGHT (Kg) --- | REF TO ASSY / OLD DWG

TITLE: INSPECTION NOZZLE AND FLAT END COVER

DRAWING NO : 3-10-176-10021

REV 00

CORPORATE DRG ID:TP-DG-3-10-176-10021/00CORP

DRAWING NO: 3-10-176-10104

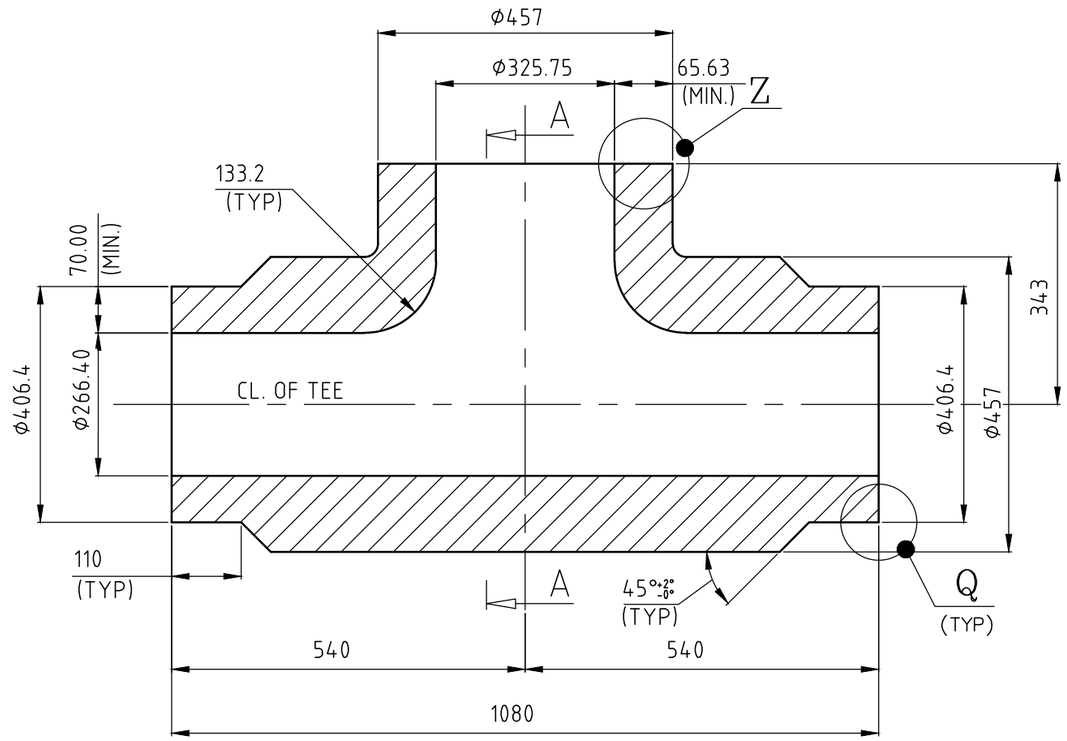

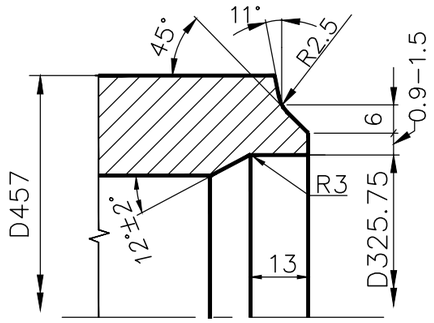

DETAIL–Z

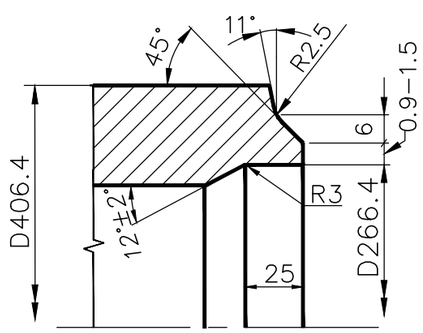

DETAIL–Q

NOTES:

1. DESIGN, MANUFACTURE AND INSPECTION AS PER IBR.
2. FOR DESIGN PARAMETERS REFER ASSY DWG.
3. RAW FORMING DRAWING NO: 3-10-000-09867

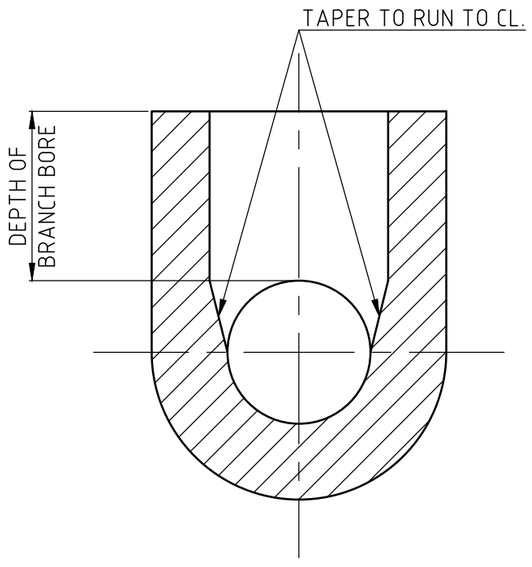

SECTION-AA

VARIANT NUMBER	ITEM NUMBER	DESCRIPTION	STD	DRAWING NUMBER			A/C/P	UNIT		GS
		UNEQUAL TEE ϕ406.4X80(NOM.) / ϕ457X75(NOM.)				921052940000	A		984.000	
						SA234WP12CL1				
					ITEM NO	MATERIAL CODE			UNIT WEIGHT	
					VAR NO	MATERIAL SPECN		DI	QUANTITY	

CAUTION: The information on this document is the property of BHARAT HEAVY ELECTRICALS LTD. It must not be used directly or indirectly in any way detrimental to the interest of the company.

TYPE OF PRODUCT OR NAME OF CUSTOMER/PROJECT

Bharat Heavy Electricals Ltd
UNIT: HIGH PRESSURE BOILER PLANT
TIRUCHIRAPALLI – 620014
355–055

	NAME	SIGNATURE	DATE
DRN	T.SHYJU		17.05.2024
CHD	T.RAJAGOPALAN		17.05.2024
APPD	N.NIRMAL RAJ		17.05.2024

REV	DATE	ALTERED :
01		CHD & APPD:
ZONE		

DEPT	CODE	ALL DIMENSIONS ARE IN MM	PROJECTION	SCALE	WEIGHT (Kg)	REF TO ASSY / OLD DWG
PP	121			N.T.S	984.000	3-10-000-09867

TITLE
UNEQUAL TEE
ϕ406.4X80(NOM.)/ϕ457X75(NOM.)

DRAWING NO : 3-10-176-10104

REV 00

DRAWING NO: 3-10-183-10088

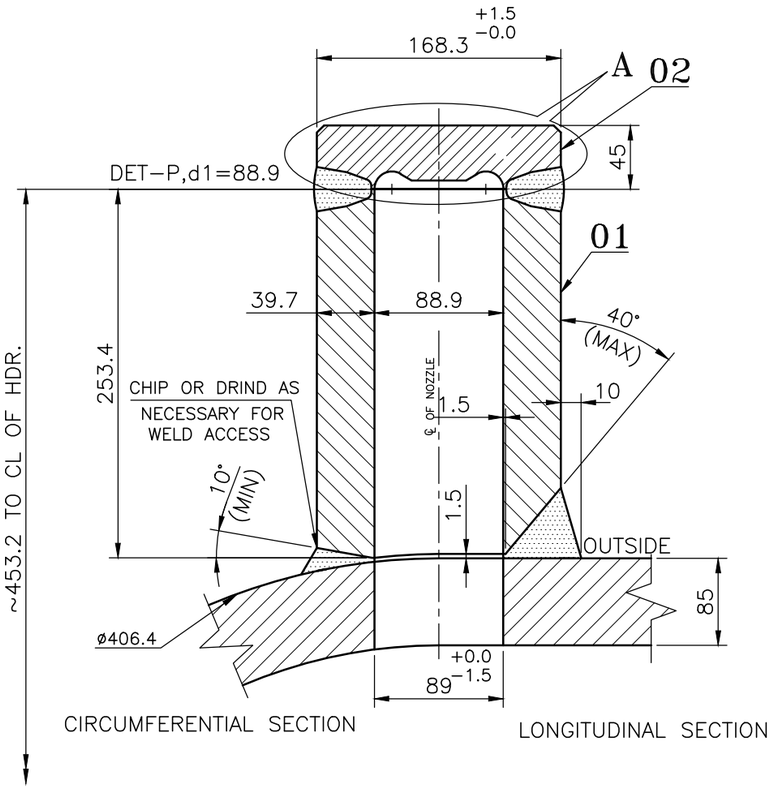

CIRCUMFERENTIAL SECTION

LONGITUDINAL SECTION

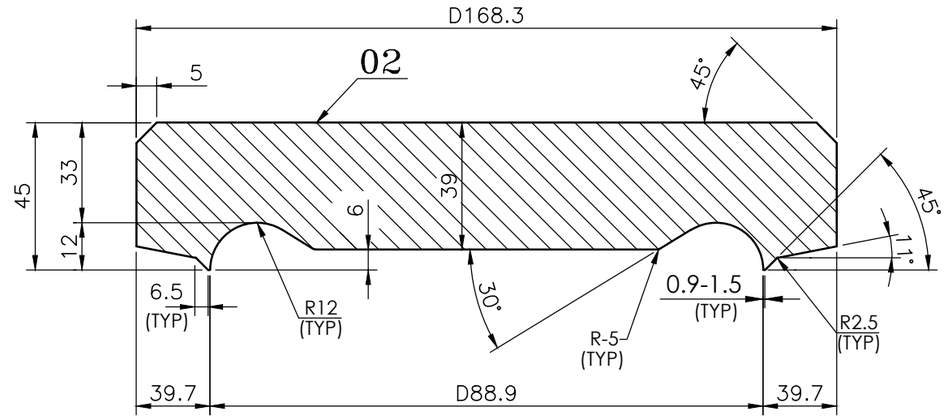

DETAIL−A

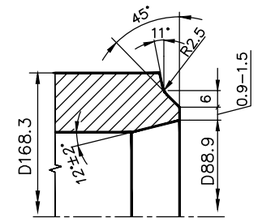

DETAIL−P

VARIANT NUMBER	ITEM NUMBER	DESCRIPTION	STD	DRAWING NUMBER	ITEM NO / VAR NO	MATERIAL CODE / MATERIAL SPECN	A/C/P	UNIT / DI	UNIT WEIGHT / QUANTITY	GS
02		FLAT END COVER D168.3 X 45 THK				920701760000	A		6.32	
						SA182F12CL2				
01		INSPECTION NOZZLE D168.3x39.7(MIN)				920846970000	A		32.000	
						SA182F12CL2				

NOTES:−

01. DESIGN, MANUFACTURE AND INSPECTION AS PER I.B.R
02. FOR DESIGN PARAMETER, REFER MAIN ASSEMBLY DRAWING.

REV	DATE	ALTERED :
01		CHD & APPD:
ZONE		

CAUTION: The information on this document is the property of BHARAT HEAVY ELECTRICALS LTD. It must not be used directly or indirectly in any way detrimental to the interest of the company.

TYPE OF PRODUCT OR NAME OF CUSTOMER/PROJECT

Bharat Heavy Electricals Ltd
UNIT: HIGH PRESSURE BOILER PLANT
TIRUCHIRAPALLI − 620014
355−055

	NAME	SIGNATURE	DATE
DRN	KARTHIK	....sd....	25.04.24
CHD	VENKAT	....sd....	26.04.24
APPD	SAI KUMAR	....sd....	27.04.24

DEPT	CODE	ALL DIMENSIONS ARE IN MM	PROJECTION	SCALE	WEIGHT (Kg)	REF TO ASSY / OLD DWG
PP	121			NTS	———	3−10−183−09454

TITLE: INSPECTION NOZZLE AND FLAT END COVER

DRAWING NO : 3−10−183−10088

REV 00

DRAWING NO: 3-10-184-10090

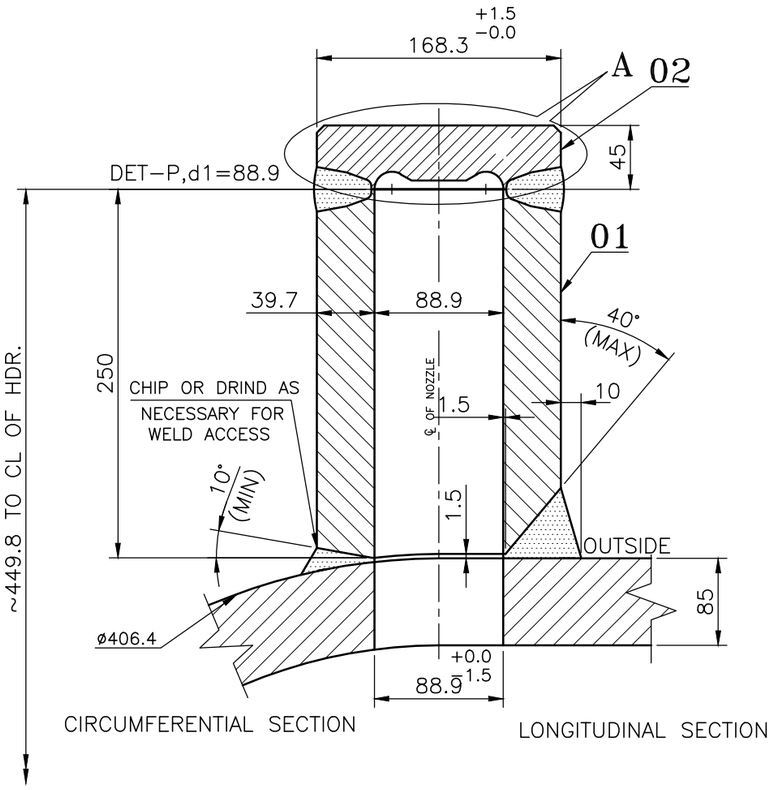

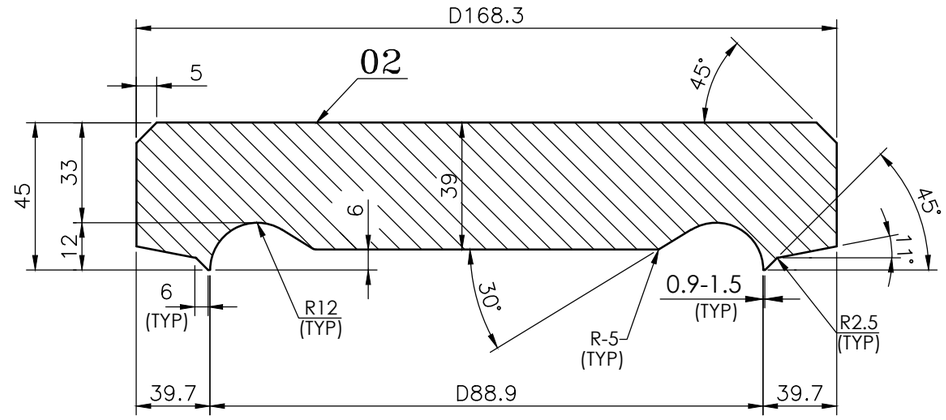

DETAIL−A

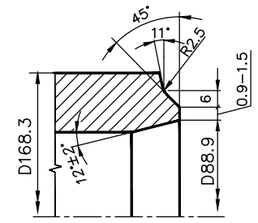

DETAIL−P

VARIANT NUMBER	ITEM NUMBER	DESCRIPTION	STD	DRAWING NUMBER	ITEM NO / VAR NO	MATERIAL CODE / MATERIAL SPECN	A/C/P	UNIT / DI	UNIT WEIGHT / QUANTITY	GS
02		FLAT END COVER D168.3 X 33(MIN)				920701760000	A		7.850	
						SA182F12CL2				
01		INSPECTION NOZZLE D168.3x39.7(MIN)				920846970000	A		31.400	
						SA182F12CL2				

NOTES:−

01. DESIGN, MANUFACTURE AND INSPECTION AS PER I.B.R
02. FOR DESIGN PARAMETER, REFER MAIN ASSEMBLY DRAWING.

REV	DATE	ALTERED :
01		CHD & APPD:
ZONE		

CAUTION: The information on this document is the property of BHARAT HEAVY ELECTRICALS LTD. It must not be used directly or indirectly in any way detrimental to the interest of the company.

TYPE OF PRODUCT OR NAME OF CUSTOMER/PROJECT

355−055

Bharat Heavy Electricals Ltd
UNIT: HIGH PRESSURE BOILER PLANT
TIRUCHIRAPALLI − 620014

	NAME	SIGNATURE	DATE
DRN	T.SHYJU		16.04.2024
CHD	VENKAT DOODI		16.04.2024
APPD	NIRMAL RAJ		16.04.2024

DEPT	CODE	ALL DIMENSIONS ARE IN MM	PROJECTION	SCALE	WEIGHT (Kg)	REF TO ASSY / OLD DWG
PP	121			NTS	———	

TITLE: INSPECTION NOZZLE AND FLAT END COVER

DRAWING NO : 3−10−184−10090

REV 00

DRAWING NO: 3-10-184-10091

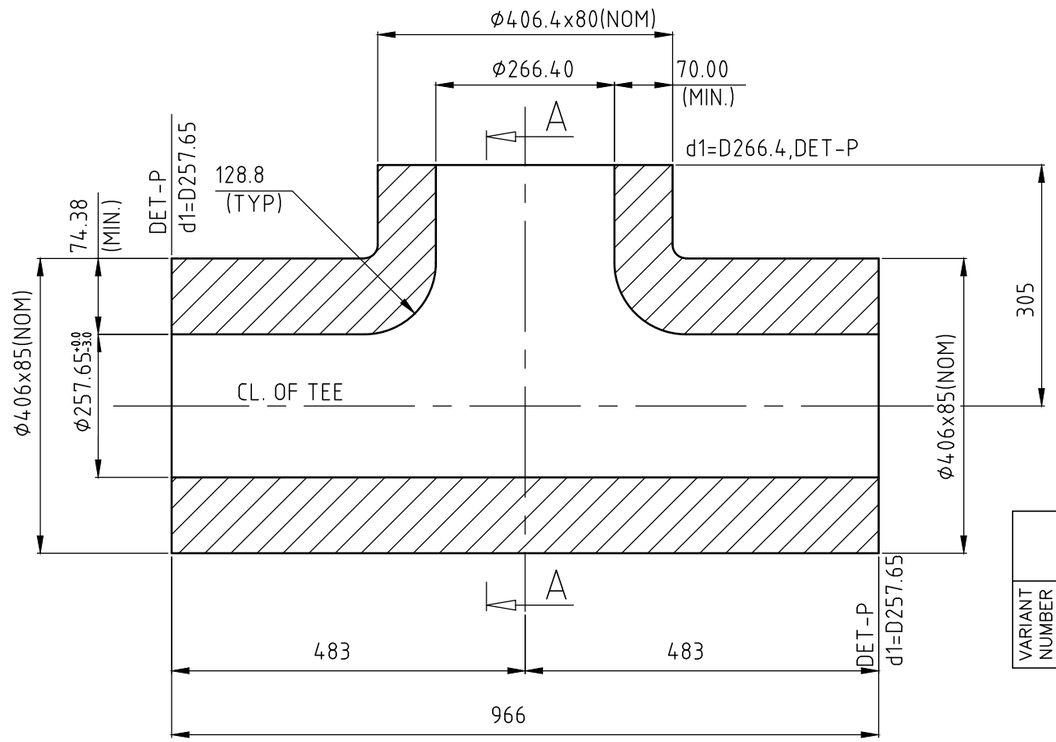

NOTES:

01. DESIGN MANUFACTURE AND INSPECTION AS PER IBR.
02. FOR DESIGN PARAMETERS, REFER ASSEMBLY DRG.
03. ALL DIMENSIONS SHOWN ARE FINISHED DIMENSIONS.
04. FOR RAW FORMING REFER DRG : 3-10-000-10073
05. NORMALISING AND TEMPERING TO BE DONE AFTER HOT FORMING.

VARIANT NUMBER	ITEM NUMBER	DESCRIPTION	STD	DRAWING NUMBER	ITEM NO	MATERIAL CODE	A/C/P	UNIT	UNIT WEIGHT	GS
		EQUALTEE D406.4x80(NOM)/ D406.4x85(NOM)				921054100000	A		720.000	
					VAR NO	SA234WP12CL1		DI	QUANTITY	

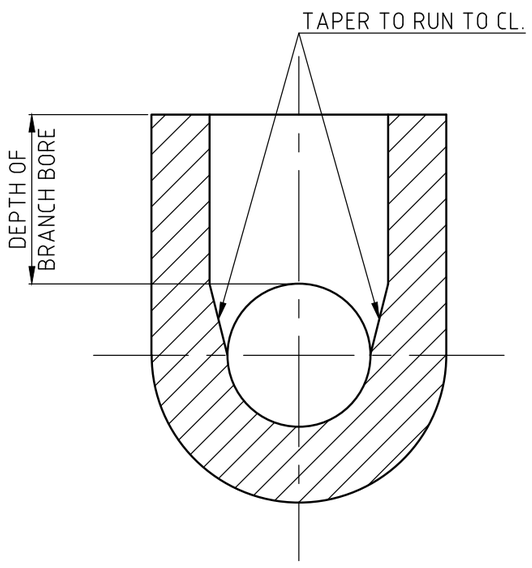

SECTION-AA

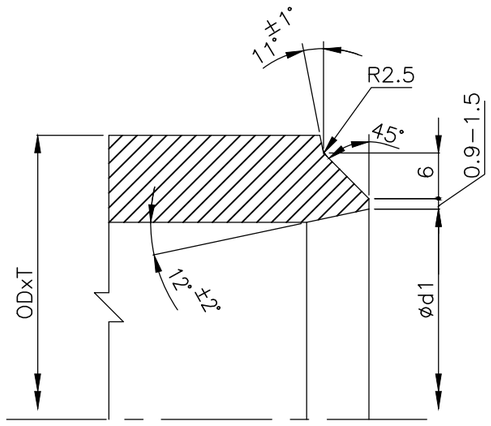

DETAIL-P

REV	DATE	ALTERED :
01		CHD & APPD:
ZONE		

CAUTION: The information on this document is the property of BHARAT HEAVY ELECTRICALS LTD. It must not be used directly or indirectly in any way detrimental to the interest of the company.

TYPE OF PRODUCT OR NAME OF CUSTOMER/PROJECT

Bharat Heavy Electricals Ltd
UNIT: HIGH PRESSURE BOILER PLANT
TIRUCHIRAPALLI – 620014
355-055

	NAME	SIGNATURE	DATE
DRN	T.SHYJU		16.04.2024
CHD	VENKAT DOODI		16.04.2024
APPD	N.NIRMAL RAJ		16.04.2024

DEPT	CODE	ALL DIMENSIONS ARE IN MM	PROJECTION	SCALE	WEIGHT (Kg)	REF TO ASSY / OLD DWG
PP	121			N.T.S	720.000	

TITLE: EQUAL TEE
ϕ406.4X80(NOM.)/ ϕ406.4X85(NOM.)

DRAWING NO : 3-10-184-10091

REV 00

CORPORATE DRG ID:TP-DG-3-10-184-10091/00CORP

DRAWING NO: 3-10-191-10087

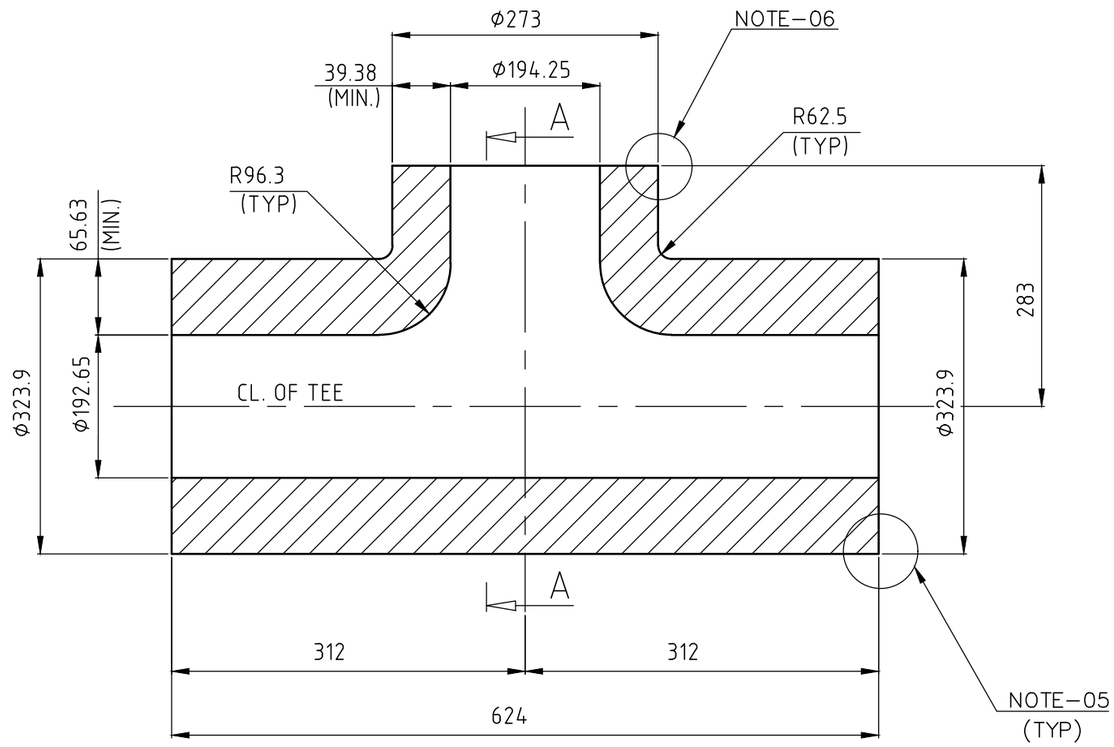

NOTES:-

01. FOR DESIGN PARAMETERS REFER ASSY DWG.
02. DESIGN, MANUFACTURE AND INSPECTION AS PER IBR.
03. ALL DIMENSIONS SHOWN ARE FINISHED DIMENSIONS.
04. RAW FORMING AS PER DRG NO. 3-10-000-10070
05. EDGE PREPARATION AS PER DETAIL-P, d1-192.65
06. EDGE PREPARATION AS PER DETAIL-P, d1-194.25.

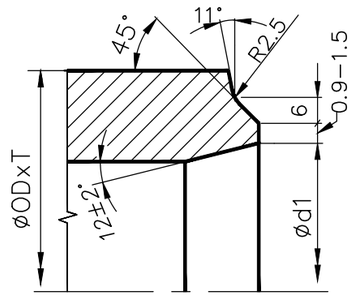

DETAIL-P

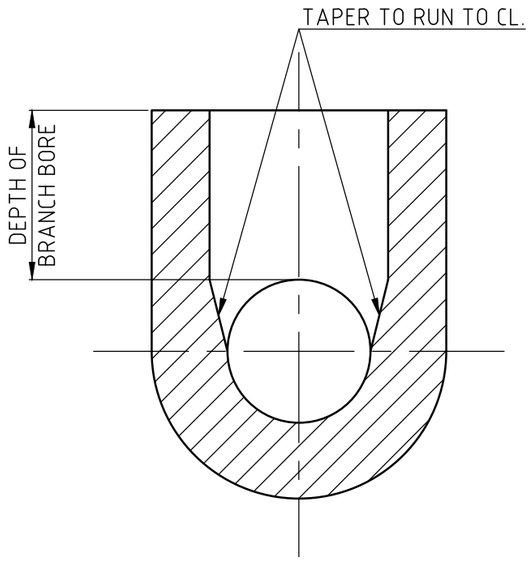

SECTION-AA

VARIANT NUMBER	ITEM NUMBER	DESCRIPTION	STD	DRAWING NUMBER	ITEM NO	MATERIAL CODE	A/C/P	UNIT	UNIT WEIGHT	GS
		UNEQ.TEE D323.9X75/ D273X45				921053500000	A		314.000	
					VAR NO	SA234WP12CL1		DI	QUANTITY	

TYPE OF PRODUCT
OR NAME OF
CUSTOMER/PROJECT

Bharat Heavy Electricals Ltd
UNIT: HIGH PRESSURE BOILER PLANT
TIRUCHIRAPALLI – 620014
355-055

	NAME	SIGNATURE	DATE
DRN	SAROJ KR		01-04-24
CHD	DHANANJAY		01-04-24
APPD	NIRMALRAJ		02-04-24

REV	DATE	ALTERED : SHYJU
01	11.09.24	CHD & APPD: DHANANJAYAN

ZONE

UN EQUZL TEE HEIGHT INCREASED FROM 241 TO 283MM BASED ON OP&C FEEDBACK.

CAUTION: The information on this document is the property of BHARAT HEAVY ELECTRICALS LTD. It must not be used directly or indirectly in any way detrimental to the interest of the company.

DEPT PP
CODE 121
ALL DIMENSIONS ARE IN MM
PROJECTION
SCALE N.T.S
WEIGHT (Kg) 324.630
REF TO ASSY / OLD DWG

TITLE UNEQUAL TEE
Φ273X45(NOM.)/ Φ323.9X75(NOM.)

DRAWING NO : 3-10-191-10087
REV 01

DRAWING NO: 3-10-235-10149

FOR TOLERANCES OF UNTOLERANCED DIMENSIONS DURING MANUFACTURE REFER PLANT STD.NO TP 023 0299

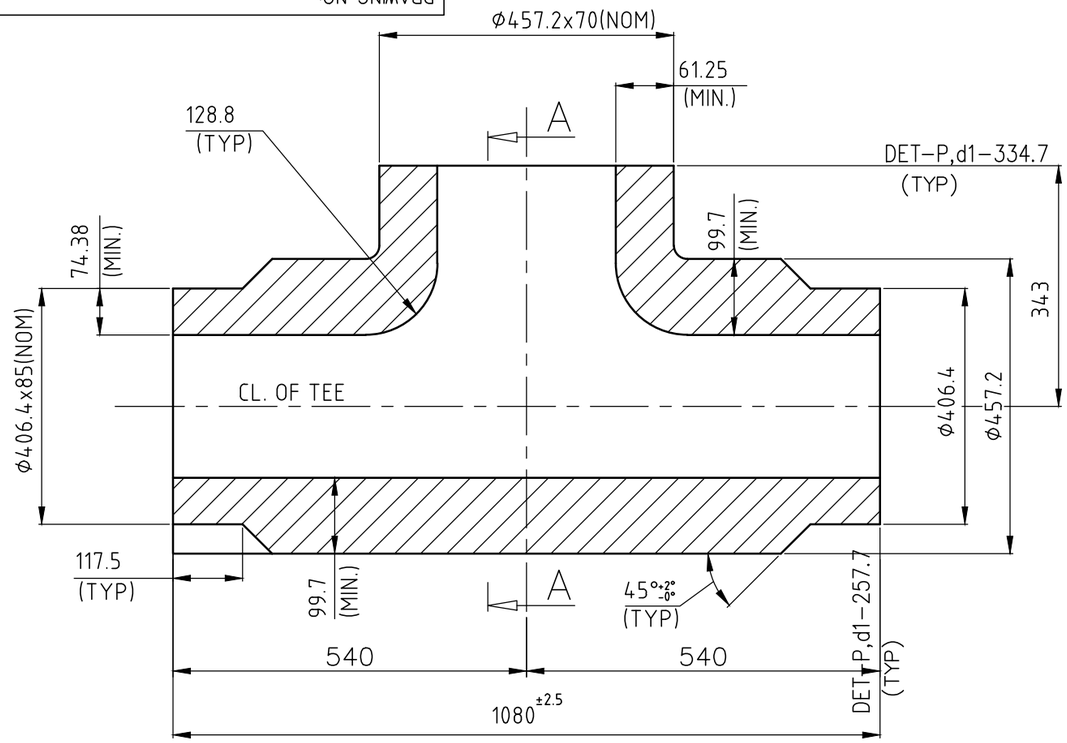

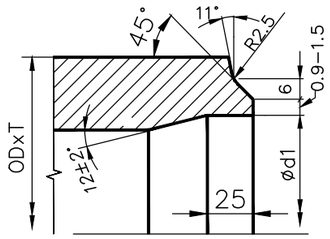

DETAIL-P

NOTES:-

01. DESIGN, MANUFACTURE AND INSPECTION AS PER IBR.
02. DESIGN PARAMETERS REF ASSY DRG.
03. RAW FORMING AS PER DRAWING NO: 3-10-000-10071
04. ALL DIMENSIONS SHOWN ARE FINISHED DIMENSIONS.

VARIANT NUMBER	ITEM NUMBER	DESCRIPTION	STD	DRAWING NUMBER	ITEM NO / VAR NO	MATERIAL CODE / MATERIAL SPECN	A/C/P	UNIT / DI	UNIT WEIGHT / QUANTITY	GS
		UN EQ.TEE D406.4X85(NOM.)/D457.2X70(NOM.)				92 105 390 0000 / SA234WP12CL1	A		1020.000	

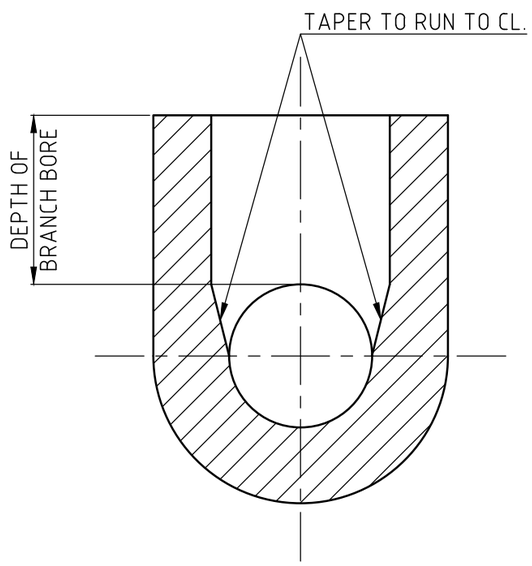

SECTION-AA

REV	DATE	ALTERED :
01		CHD & APPD:
ZONE		

CAUTION: The information on this document is the property of BHARAT HEAVY ELECTRICALS LTD. It must not be used directly or indirectly in any way detrimental to the interest of the company.

TYPE OF PRODUCT OR NAME OF CUSTOMER/PROJECT

Bharat Heavy Electricals Ltd
UNIT: HIGH PRESSURE BOILER PLANT
TIRUCHIRAPALLI – 620014
355-055

	NAME	SIGNATURE	DATE
DRN	SHEEBA.S		11.09.24
CHD	T.SHYJU		09.10.24
APPD	R.SAI KUMAR		10.10.24

DEPT	CODE	ALL DIMENSIONS ARE IN MM	PROJECTION	SCALE	WEIGHT (Kg)	REF TO ASSY / OLD DWG
PP	121			N.T.S	1020.000	

TITLE
UN EQUAL TEE
ϕ406.4X85(NOM.)/ ϕ457.2X70(NOM.)

DRAWING NO : 3-10-235-10149

REV 00

DRAWING NO: 3-10-284-10107

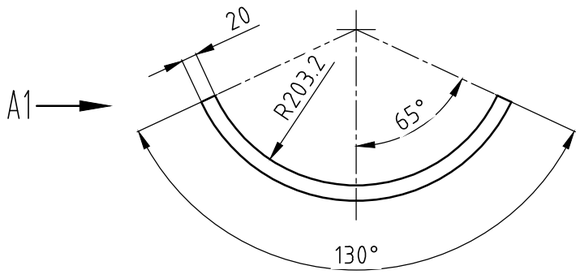

VAR-01: PAD PLATE

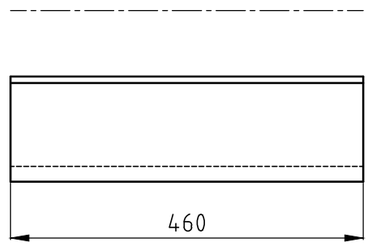

VIEW-A1

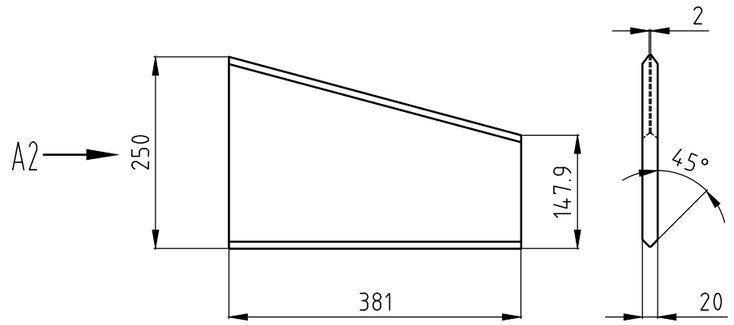

VAR-02: SADDLE PLATE

VIEW-A2

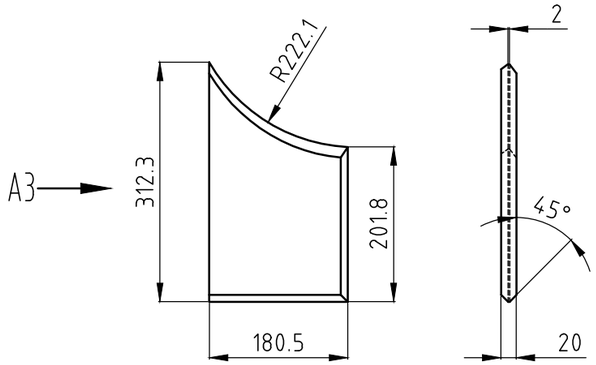

VAR-03: SADDLE PLATE

VIEW-A3

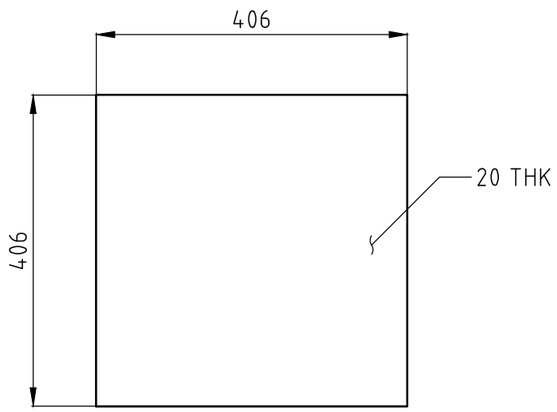

VAR-04: BASE PLATE

VARIANT NUMBER	ITEM NUMBER	DESCRIPTION	STD	DRAWING NUMBER	ITEM NO / VAR NO	MATERIAL CODE / MATERIAL SPECN	A/C/P	UNIT / DI	UNIT WEIGHT / QUANTITY	GS
04		BASE PLATE 20 x 406 x 406				150422520000 / SA387GR12CL2	C		25.870	
03		SADDLE PLATE 20 x 180.5 x 312.3				150422520000 / SA387GR12CL2	C		6.230	
02		SADDLE PLATE 20 x 250 x 381				150422520000 / SA387GR12CL2	C		11.160	
01		PAD PLATE 20 x 460 x 484				150422520000 / SA387GR12CL2	C		34.950	

REV	DATE	ALTERED :
01		CHD & APPD:
ZONE		

CAUTION: The information on this document is the property of BHARAT HEAVY ELECTRICALS LTD. It must not be used directly or indirectly in any way detrimental to the interest of the company.

TYPE OF PRODUCT OR NAME OF CUSTOMER/PROJECT

355-055

Bharat Heavy Electricals Ltd
UNIT: HIGH PRESSURE BOILER PLANT
TIRUCHIRAPALLI – 620014

	NAME	SIGNATURE	DATE
DRN	SAIKUMAR		06.06.2024
CHD	NIRMAL RAJ		11.06.2024
APPD	NIRMAL RAJ		11.06.2024

DEPT PP | CODE 121 | ALL DIMENSIONS ARE IN MM | PROJECTION | SCALE NTS | WEIGHT (Kg) --- | REF TO ASSY / OLD DWG

TITLE: DETAILS OF SUPPORT SADDLE

DRAWING NO : 3-10-284-10107

REV 00

DRAWING NO: 3-15-136-02520

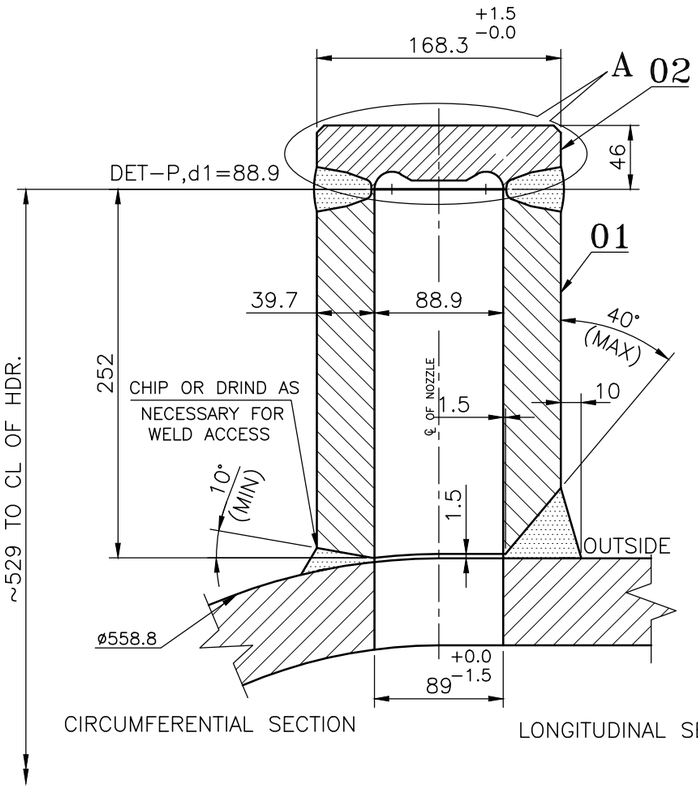

CIRCUMFERENTIAL SECTION

LONGITUDINAL SECTION

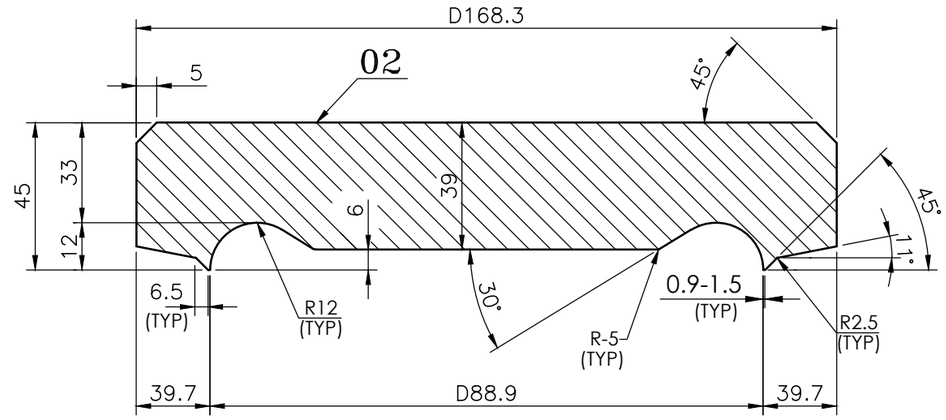

DETAIL−A

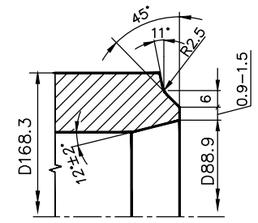

DETAIL−P

VARIANT NUMBER	ITEM NUMBER	DESCRIPTION	STD	DRAWING NUMBER	ITEM NO / VAR NO	MATERIAL CODE / MATERIAL SPECN	A/C/P	UNIT / DI	UNIT WEIGHT / QUANTITY	GS
02		FLAT END COVER D168.3; T=33(MIN)				92 070 176 0000 / SA 182 F12CL2	A		7.85	
01		INSPECTION NOZZLE D168.3; T=39.7(MIN)				92 084 697 0000 / SA 182 F12CL2	A		32	

NOTES:−

01. DESIGN, MANUFACTURE AND INSPECTION AS PER I.B.R
02. FOR DESIGN PARAMETER, REFER MAIN ASSEMBLY DRAWING.

REV	DATE	ALTERED :
01		CHD & APPD:
ZONE		

CAUTION: The information on this document is the property of BHARAT HEAVY ELECTRICALS LTD. It must not be used directly or indirectly in any way detrimental to the interest of the company.

TYPE OF PRODUCT OR NAME OF CUSTOMER/PROJECT

355−055

Bharat Heavy Electricals Ltd
UNIT: HIGH PRESSURE BOILER PLANT
TIRUCHIRAPALLI − 620014

	NAME	SIGNATURE	DATE
DRN	VENKAT D	....sd....	26.08.24
CHD	VENKAT D	....sd....	27.08.24
APPD	NIRMALRAJ N	....sd....	27.08.24

DEPT	CODE	ALL DIMENSIONS ARE IN MM	PROJECTION	SCALE	WEIGHT (Kg)	REF TO ASSY / OLD DWG
PP	121			NTS	———	

TITLE: INSPECTION NOZZLE AND FLAT END COVER

DRAWING NO : 3−15−136−02520

REV 00

DRAWING NO: 3-19-753-05183

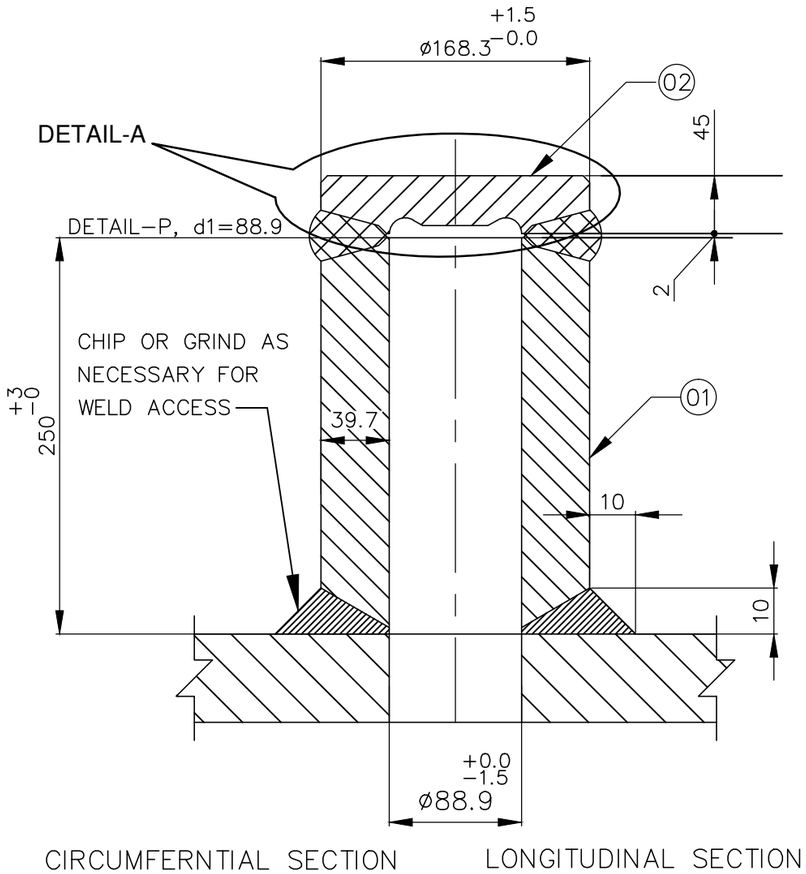

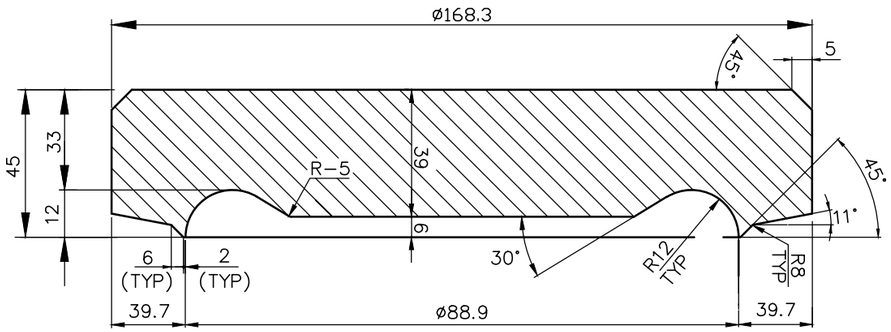

DETAIL-A

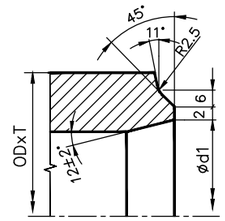

DETAIL−P

NOTES:

1. FOR DESIGN PARAMETERS REFER ASSY DWG.
2. DESIGN,MANUFACTURING AND INSPECTION AS PER IBR.

VARIANT NUMBER	ITEM NUMBER	DESCRIPTION	STD	DRAWING NUMBER	ITEM NO / VAR NO	MATERIAL CODE / MATERIAL SPECN	A/C/P	UNIT / DI	UNIT WEIGHT / QUANTITY	GS
	02	FLAT END COVER D168.3 x 45(NOM)				920701750000 / SA105	A		5.800	
	01	INSPECTION NOZZLE D168.3x39.7(MIN)				920848000000 / SA105	A		31.500	

CAUTION: The information on this document is the property of BHARAT HEAVY ELECTRICALS LTD. It must not be used directly or indirectly in any way detrimental to the interest of the company.

TYPE OF PRODUCT
OR NAME OF
CUSTOMER/PROJECT

355−055

Bharat Heavy Electricals Ltd
UNIT: HIGH PRESSURE BOILER PLANT
TIRUCHIRAPALLI − 620014

	NAME	SIGNATURE	DATE
DRN	T.Mayakrishnan		26.05.2015
CHD	R.Natarajan		27.05.2015
APPD	R.Natarajan		28.05.2015

REV	DATE	ALTERED :
01		CHD & APPD:
ZONE		

DEPT PP | CODE 121 | ALL DIMENSIONS ARE IN MM | PROJECTION | SCALE NTS | WEIGHT (Kg) −−− | REF TO ASSY / OLD DWG

TITLE: INSPECTION NOZZLE AND FLAT END COVER

DRAWING NO : 3-19-753-05183

REV 00

CAUTION: THE INFMN ON THIS DOCUMENT IS THE PROPERTY OF BHEL.
IT MUST NOT BE USED DIRECTLY OR INDIRECTLY
IN ANY WAY DETRIMENTAL TO THE INTEREST OF BHEL

REV	DATE	ALTERED :
		CHD & APPD :

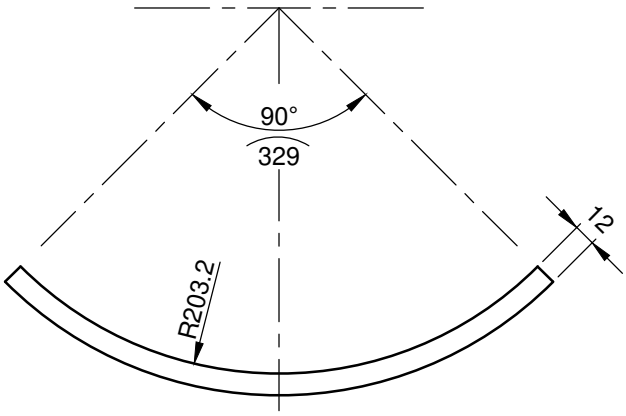

VARIANT NUMBER	DESCRIPTION	STD	MATERIAL CODE / MATERIAL SPECN	A/C/P	UNIT	UNIT WEIGHT / QUANTITY
	PLATE 12 x 300 x 329		15 942 280 0000	C		9.300
			SA 387 GR12 CL2			

Bharat Heavy Electricals Ltd UNIT: HIGH PRESSURE BOILER PLANT TIRUCHIRAPALLI - 620014 361-321		NAME	SIGNATURE	DATE
	DRN	G.Srinivasan		05.08.2017
	CHD	M.Shyam Sundar		07.08.2017
	APPD	N.K / I.Anvarali		08.08.2017

DEPT	ALL DIMENSIONS ARE IN MM	PROJECTION	SCALE	WEIGHT (kg)	REF TO ASSY / OLD DWG
PCPS			NTS	9.300	
CODE 1322					

TITLE	DRAWING No. :	REV
PAD PLATE	4-05-137-03122	00

CAUTION: THE INFMN ON THIS DOCUMENT IS THE PROPERTY OF BHEL. IT MUST NOT BE USED DIRECTLY OR INDIRECTLY IN ANY WAY DETRIMENTAL TO THE INTEREST OF BHEL

REV	DATE	ALTERED :
		CHD & APPD :

NOTES:-

01. DESIGN, MANUFACTURE AND INSPECTION AS PER I.B.R.
02. FOR DESIGN PARAMETERS REFER ASSY. DWG.
03. BUTT WELD EDGE PREPARATION AS PER DETAIL - C

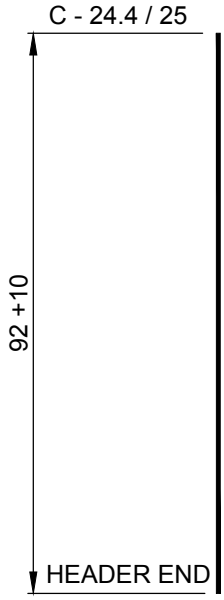

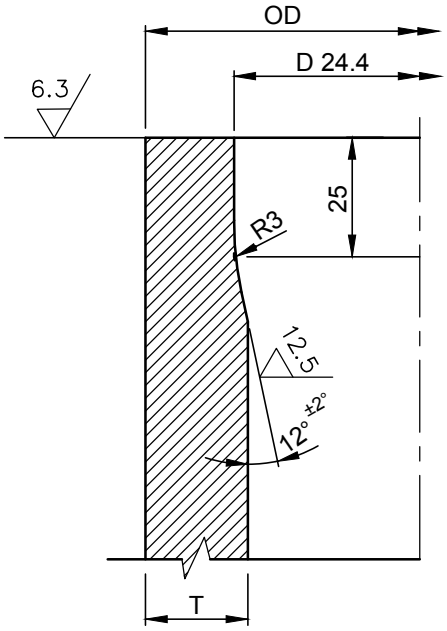

DETAIL–C

VARIANT NUMBER	DESCRIPTION	STD	MATERIAL CODE / MATERIAL SPECN	A/C/P	UNIT	UNIT WEIGHT / QUANTITY
	TUBE D38.1 x 6.6 L = 92 + 10		154940201001 SA213T12	A		0.648

Bharat Heavy Electricals Ltd UNIT: HIGH PRESSURE BOILER PLANT TIRUCHIRAPALLI - 620014 361-321	DRN	VENKAT D		26.07.24
	CHD	VENKAT D		27.07.24
	APPD	NIRMALRAJ N		27.07.24

DEPT	ALL DIMENSIONS ARE IN MM	PROJECTION	SCALE	WEIGHT (kg)	REF TO ASSY / OLD DWG
PP CODE 121			N.T.S	0.648	4-05-137-03120

TITLE	DRAWING No. :	REV
NIPPLE (D 38.1 x 6.6)	4-05-137-03218	00

CAUTION: THE INFMN ON THIS DOCUMENT IS THE PROPERTY OF BHEL. IT MUST NOT BE USED DIRECTLY OR INDIRECTLY IN ANY WAY DETRIMENTAL TO THE INTEREST OF BHEL

REV	DATE	ALTERED :
		CHD & APPD :

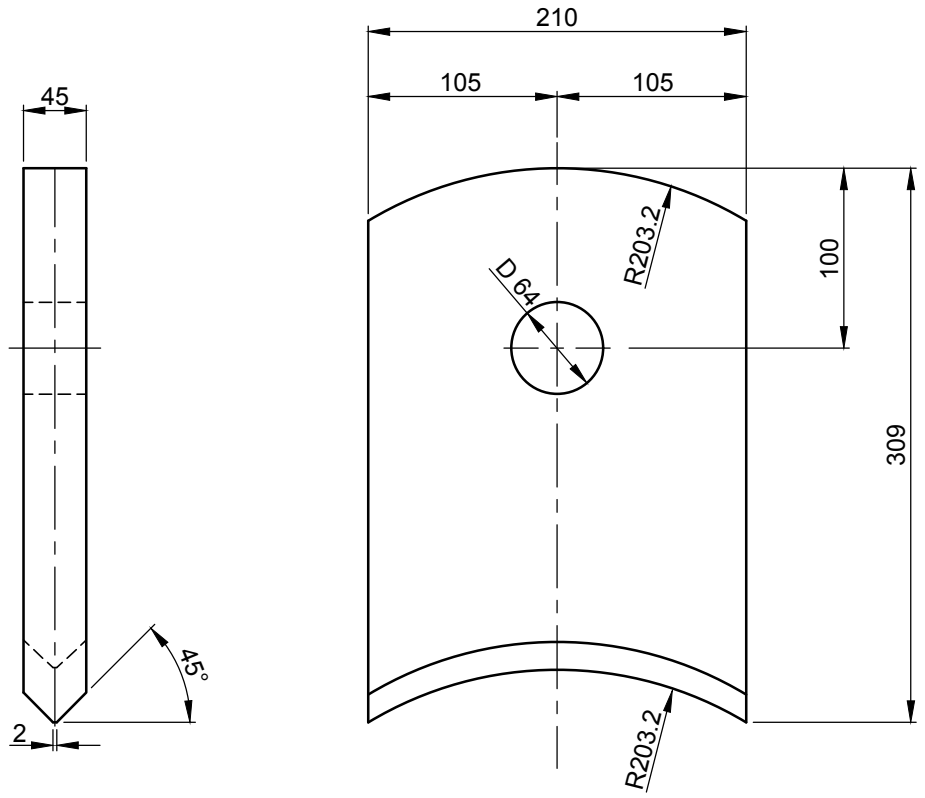

VARIANT NUMBER	DESCRIPTION	STD	MATERIAL CODE	A/C/P	UNIT	UNIT WEIGHT
	PLATE 45 x 309 x 210		159421180000	C		22.9
			SA 515 GR70			
			MATERIAL SPECN			QUANTITY

Bharat Heavy Electricals Ltd UNIT: HIGH PRESSURE BOILER PLANT TIRUCHIRAPALLI - 620014 361-321	DRN	NAME VENKAT D	SIGNATURE	DATE 26.06.2024
	CHD	VENKAT D		27.06.2024
	APPD	NIRMAL RAJ		27.06.2024

DEPT	ALL DIMENSIONS ARE IN MM	PROJECTION	SCALE	WEIGHT (kg)	REF TO ASSY / OLD DWG
PP			NTS	22.9	
CODE 121					

TITLE	DRAWING No. :	REV
LUG	4-05-137-03219	00

CORPORATE DRG ID:TP-DG-4-05-231-03213/00

REV	DATE	ALTERED :
		CHD & APPD :

CAUTION: THE INFMN ON THIS DOCUMENT IS THE PROPERTY OF BHEL. IT MUST NOT BE USED DIRECTLY OR INDIRECTLY IN ANY WAY DETRIMENTAL TO THE INTEREST OF BHEL

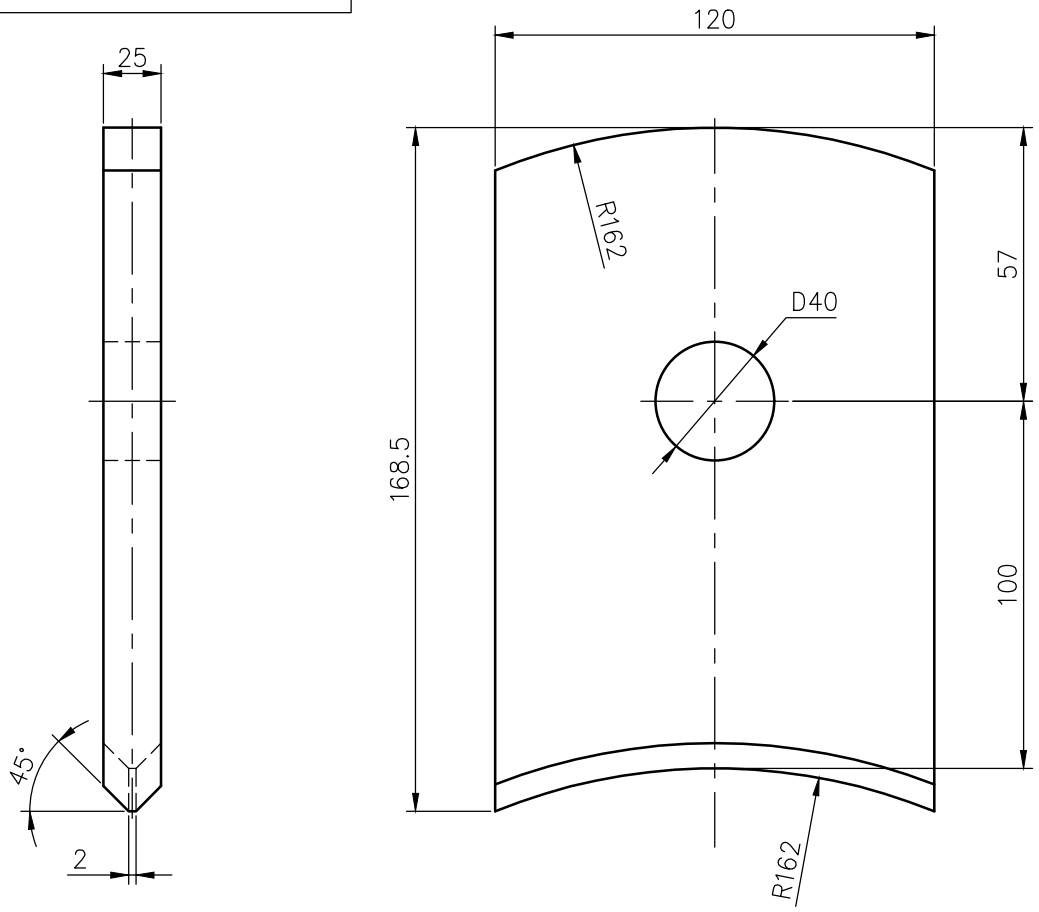

VARIANT NUMBER	DESCRIPTION	STD	MATERIAL CODE / MATERIAL SPECN	A/C/P	UNIT	UNIT WEIGHT / QUANTITY
	PLATE 25x120x168.5		15 042 282 0000 / SA 387 GR12 CL2	C		3.500

Bharat Heavy Electricals Ltd UNIT: HIGH PRESSURE BOILER PLANT TIRUCHIRAPALLI - 620014 355-056		NAME	SIGNATURE	DATE
	DRN	VENKAT D		27.03.24
	CHD	SAJI P		27.03.24
	APPD	NIRMALRAJ		27.03.24

DEPT	ALL DIMENSIONS ARE IN MM	PROJECTION	SCALE	WEIGHT (Kg)	REF TO ASSY / OLD DWG
PP			N.T.S	3.500	
CODE 121					

TITLE	DRAWING NO :	REV
SUSPENSION LUG	4-05-231-03213	00

CORPORATE DRG ID:TP-DG-4-05-231-03213/00

REV	DATE	ALTERED :
01		CHD & APPD :

CAUTION: THE INFMN ON THIS DOCUMENT IS THE PROPERTY OF BHEL. IT MUST NOT BE USED DIRECTLY OR INDIRECTLY IN ANY WAY DETRIMENTAL TO THE INTEREST OF BHEL

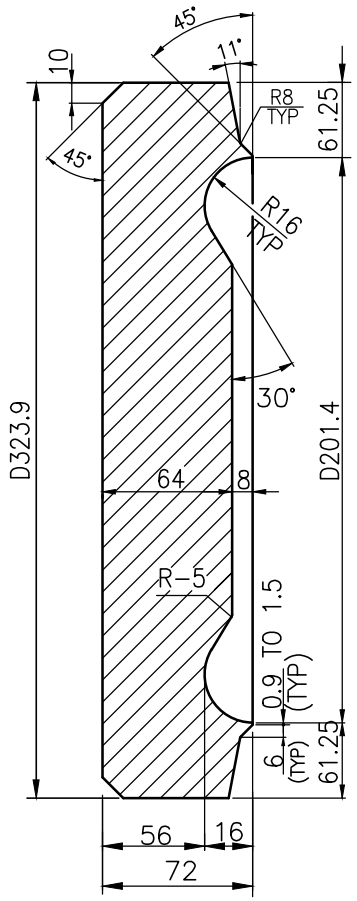

NOTES:

01. DESIGN, MANUFACTURE & INSPECTION AS PER IBR
02. FOR DESIGN PARAMETERS REFER ASSY. DRAWING

VARIANT NUMBER	DESCRIPTION	STD	MATERIAL CODE / MATERIAL SPECN	A/C/P	UNIT	UNIT WEIGHT / QUANTITY
	FLAT END COVER D168.3x46(NOM)		92 070 198 0000 / SA 182 F12 CL2	A		38.500

Bharat Heavy Electricals Ltd UNIT: HIGH PRESSURE BOILER PLANT TIRUCHIRAPALLI - 620014 355-056		NAME	SIGNATURE	DATE
	DRN	SHEEBA S		20.06.18
	CHD	NIRMAL		21.06.18
	APPD	SAK		22.06.18

DEPT	ALL DIMENSIONS ARE IN MM	PROJECTION	SCALE	WEIGHT (Kg)	REF TO ASSY / OLD DWG
PP / CODE 121			NTS	38.500	

TITLE	DRAWING NO :	REV
FLAT END COVER D323.9,T=56(MIN)	4-05-251-03139	00

REV	DATE	ALTERED :
		CHD & APPD :

CAUTION: THE INFMN ON THIS DOCUMENT IS THE PROPERTY OF BHEL. IT MUST NOT BE USED DIRECTLY OR INDIRECTLY IN ANY WAY DETRIMENTAL TO THE INTEREST OF BHEL

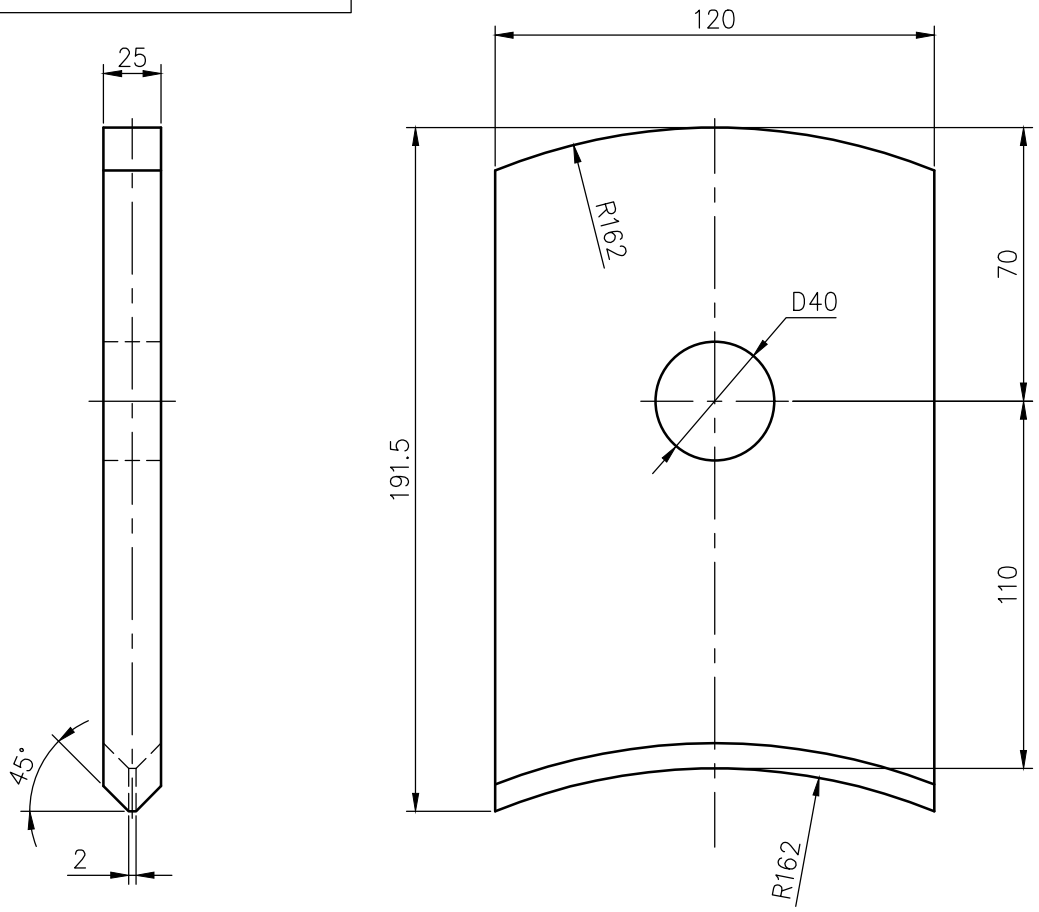

VARIANT NUMBER	DESCRIPTION	STD	MATERIAL CODE / MATERIAL SPECN	A/C/P	UNIT	UNIT WEIGHT / QUANTITY
	PLATE 25x120x191.5		15 042 282 0000 / SA 387 GR12 CL2	C		4.130

Bharat Heavy Electricals Ltd UNIT: HIGH PRESSURE BOILER PLANT TIRUCHIRAPALLI - 620014 355-056		NAME	SIGNATURE	DATE
	DRN	DHANANJAYAN		26.03.24
	CHD	NIRMAL		27.03.24
	APPD	NIRMAL		27.03.24

DEPT	ALL DIMENSIONS ARE IN MM	PROJECTION	SCALE	WEIGHT (Kg)	REF TO ASSY / OLD DWG
PP			N.T.S	4.060	
CODE 121					

TITLE	DRAWING NO :	REV
SUSPENSION LUG	4-05-251-03211	00

REV	DATE	ALTERED :
01		CHD & APPD :

CAUTION: THE INFMN ON THIS DOCUMENT IS THE PROPERTY OF BHEL. IT MUST NOT BE USED DIRECTLY OR INDIRECTLY IN ANY WAY DETRIMENTAL TO THE INTEREST OF BHEL

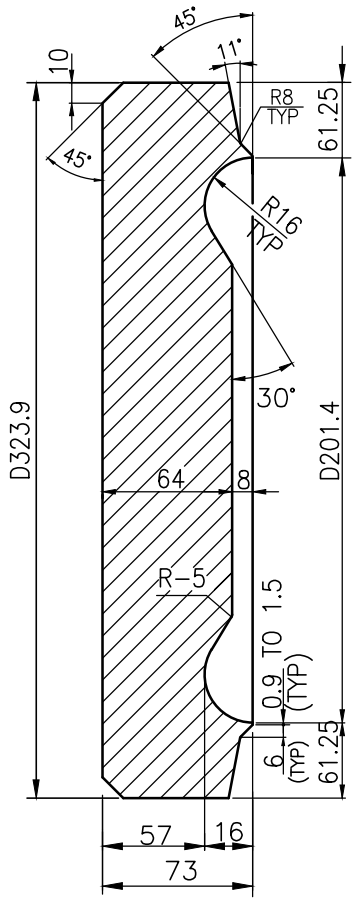

NOTES:

01. DESIGN, MANUFACTURE & INSPECTION AS PER IBR
02. FOR DESIGN PARAMETERS REFER ASSY. DRAWING

VARIANT NUMBER	DESCRIPTION	STD	MATERIAL CODE / MATERIAL SPECN	A/C/P	UNIT	UNIT WEIGHT / QUANTITY
	FLAT END COVER D323.9.3x57(min)		92 070 198 0000 / SA 182 F12 CL2	A		39.920

Bharat Heavy Electricals Ltd
UNIT: HIGH PRESSURE BOILER PLANT
TIRUCHIRAPALLI - 620014
355-056

	NAME	SIGNATURE	DATE
DRN	SAROJ		28.03.24
CHD	DHANANJAYAN		28.03.24
APPD	NIRMALRAJ		29.03.24

DEPT	ALL DIMENSIONS ARE IN MM	PROJECTION	SCALE	WEIGHT (Kg)	REF TO ASSY / OLD DWG
PP			NTS	39.920	
CODE 121					

TITLE: FLAT END COVER D323.9,T=57(MIN)

DRAWING NO : 4-05-251-03212 REV 00

REV	DATE	ALTERED :
01		CHD & APPD :

CAUTION: THE INFMN ON THIS DOCUMENT IS THE PROPERTY OF BHEL. IT MUST NOT BE USED DIRECTLY OR INDIRECTLY IN ANY WAY DETRIMENTAL TO THE INTEREST OF BHEL

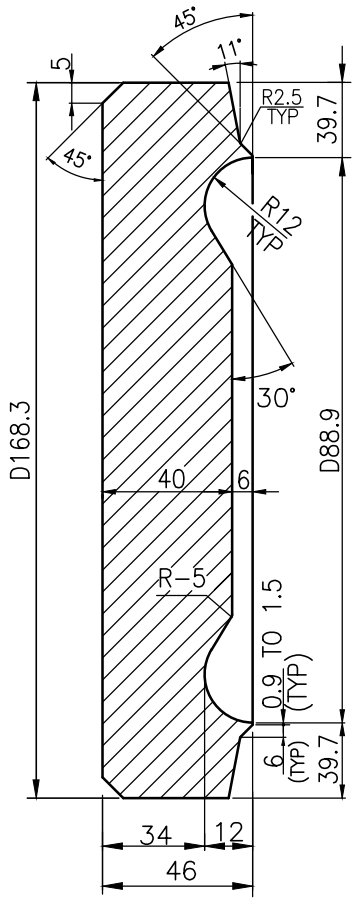

NOTES:

01. DESIGN, MANUFACTURE & INSPECTION AS PER IBR
02. FOR DESIGN PARAMETERS REFER ASSY. DRAWING

VARIANT NUMBER	DESCRIPTION	STD	MATERIAL CODE / MATERIAL SPECN	A/C/P	UNIT	UNIT WEIGHT / QUANTITY
	FLAT END COVER D168.3x34(MIN)		92 070 176 0000 / SA 182 F12 CL2	A		8.000

			NAME	SIGNATURE	DATE
355-056	Bharat Heavy Electricals Ltd UNIT: HIGH PRESSURE BOILER PLANT TIRUCHIRAPALLI - 620014	DRN	SHEEBA S		08.06.18
		CHD	NIRMAL		09.07.18
		APPD	SAK		10.07.18

DEPT	ALL DIMENSIONS ARE IN MM	PROJECTION	SCALE	WEIGHT (Kg)	REF TO ASSY / OLD DWG
PP / CODE 121			NTS	8.000	

TITLE	DRAWING NO :	REV
FLAT END COVER D168.3,T=34(MIN)	4-05-327-03138	00

CORPORATE DRG ID:TP-DG-4-05-327-03217/00

CAUTION: THE INFMN ON THIS DOCUMENT IS THE PROPERTY OF BHEL. IT MUST NOT BE USED DIRECTLY OR INDIRECTLY IN ANY WAY DETRIMENTAL TO THE INTEREST OF BHEL

FOR TOLERANCES OF UNTOLERANCED DIMENSIONS DURING MANUFACTURE REFER PLANT STD. NO TP 023 0299

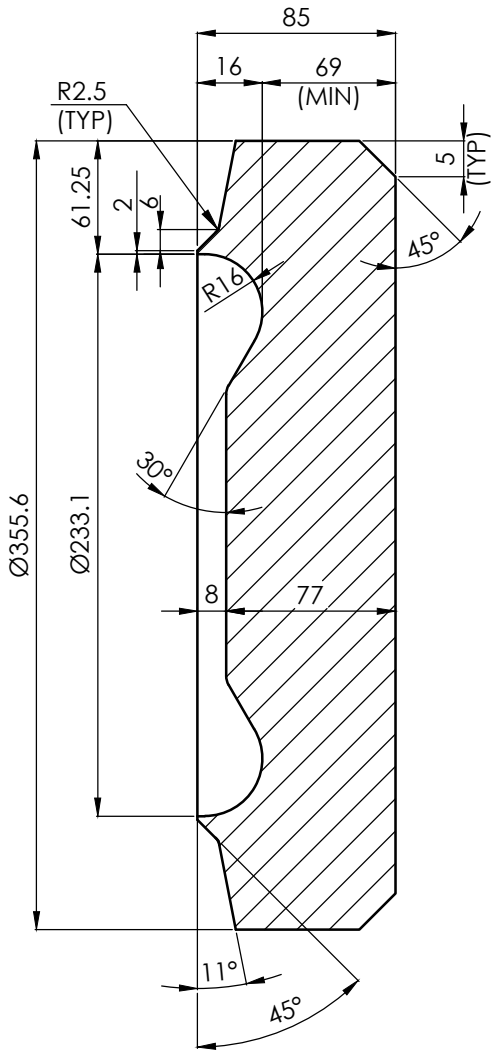

NOTES:

FOR DESIGN PARAMETER REFER ASSY. DRAWING

	FLAT END COVER ø355.6X85		920842490000	A		70.67
			SA182F12CL2			
VARIANT NUMBER	DESCRIPTION	STD	MATERIAL CODE	A/C/P	UNIT	UNIT WEIGHT
			MATERIAL SPECN			QUANTITY

Bharat Heavy Electricals Ltd UNIT: HIGH PRESSURE BOILER PLANT TIRUCHIRAPALLI – 620014 355–056	DRN	NAME DHANANJAY	SIGNATURE	DATE 30.04.24
	CHD	DHANANJAY		30.04.24
	APPD	NIRMALRAJ		30.04.24

DEPT PP CODE 121	ALL DIMENSIONS ARE IN MM	PROJECTION	SCALE N.T.S	WEIGHT (Kg) 70.67	REF TO ASSY / OLD DWG 4–05–330–03216

TITLE FLAT END COVER; OD: 355.6 ; T=69(MIN)	DRAWING NO : 4–05–327–03217	REV 00

CORPORATE DRG ID:TP-DG-4-05-327-03217/00

CORPORATE DRG ID:TP-DG-4-05-330-03216/00

CAUTION: THE INFMN ON THIS DOCUMENT IS THE PROPERTY OF BHEL. IT MUST NOT BE USED DIRECTLY OR INDIRECTLY IN ANY WAY DETRIMENTAL TO THE INTEREST OF BHEL

FOR TOLERANCES OF UNTOLERANCED DIMENSIONS DURING MANUFACTURE REFER PLANT STD. NO TP 023 0299

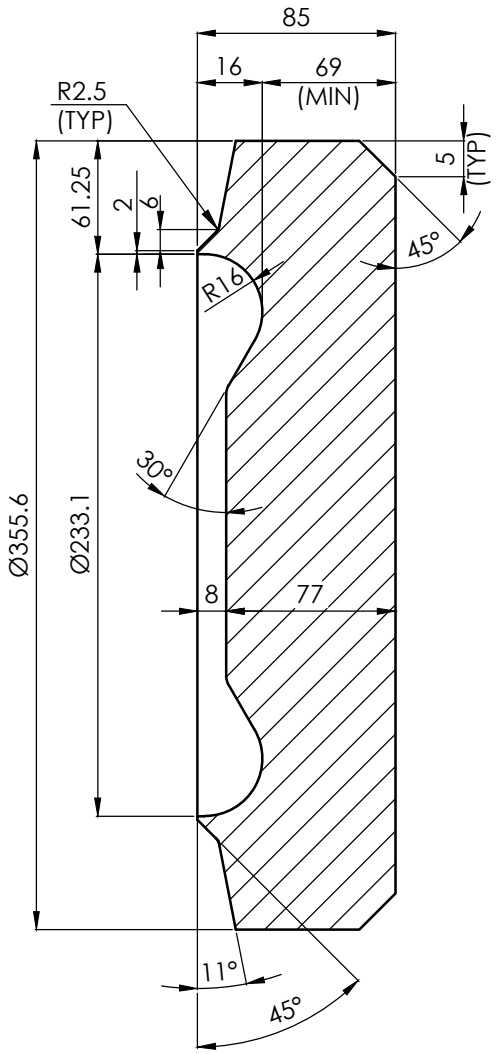

NOTES:

FOR DESIGN PARAMETER REFER ASSY. DRAWING

	FLAT END COVER ø355.6X85		920701990000	A		70.67
			SA182F12CL2			
VARIANT NUMBER	DESCRIPTION	STD	MATERIAL CODE	A/C/P	UNIT	UNIT WEIGHT
			MATERIAL SPECN			QUANTITY

Bharat Heavy Electricals Ltd UNIT: HIGH PRESSURE BOILER PLANT TIRUCHIRAPALLI – 620014 355–056	DRN	NAME DHANANJAY	SIGNATURE	DATE 30.04.24
	CHD	DHANANJAY		30.04.24
	APPD	NIRMALRAJ		30.04.24

DEPT PP CODE 121	ALL DIMENSIONS ARE IN MM	PROJECTION	SCALE N.T.S	WEIGHT (Kg) 70.67	REF TO ASSY / OLD DWG

TITLE FLAT END COVER; OD: 355.6 ; T=69(MIN)	DRAWING NO : 4–05–330–03216	REV 00

CORPORATE DRG ID:TP-DG-4-05-330-03216/00

CORPORATE DRG ID:TP-DG-4-10-135-06771/00

REV	DATE	ALTERED
		CHD & APPD

CAUTION : The information on this document is the property of BHARAT HEAVY ELECTRICALS LTD. It must not be used directly or indirectly in any way detrimental to the interest of the company.

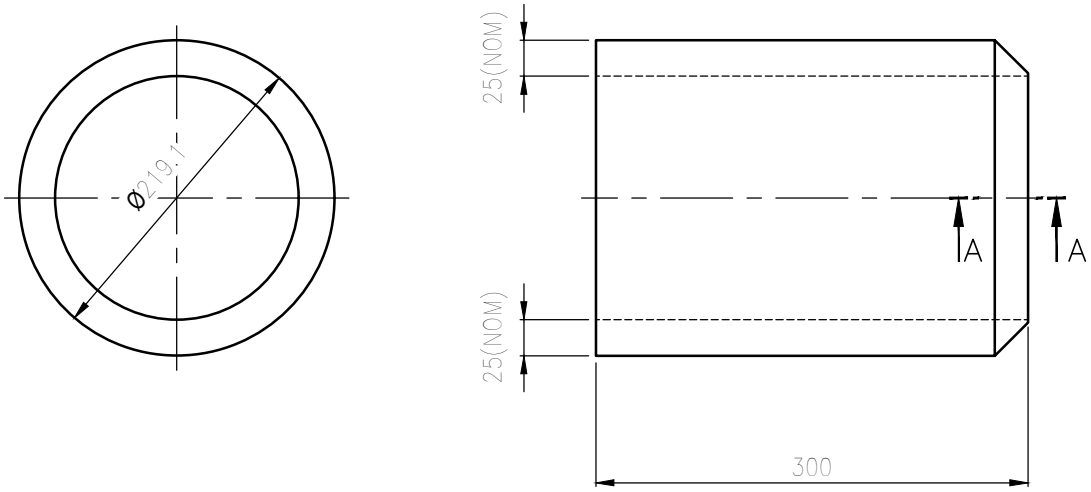

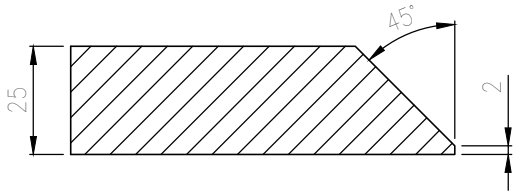

SECTION–AA

VARIANT NUMBER	DESCRIPTION	STD	MATERIAL CODE / MATERIAL SPECN	A/C/P	UNIT	UNIT WEIGHT / QUANTITY
	PIPE D219.1x25 L=300		15 090 211 6000 SA 335 P12	C		35.890

		NAME	SIGNATURE	DATE
Bharat Heavy Electricals Ltd UNIT: HIGH PRESSURE BOILER PLANT TIRUCHIRAPALLI - 620014 355–056	DRN	K.Muneeswaran		06.03.20
	CHD	N Nirmal Raj		06.03.20
	APPD	K.Sridharan		06.03.20

DEPT	ALL DIMENSIONS ARE IN MM	PROJECTION	SCALE	WEIGHT (Kg)	REF TO ASSY / OLD DWG
PP CODE 121			N.T.S	35.890	

TITLE	DRAWING NO :	REV
PIPE D219.1x25	4–10–135–06771	00

A4 SIZE

CORPORATE DRG ID:TP-DG-4-10-135-06771/00

CAUTION: THE INFMN ON THIS DOCUMENT IS THE PROPERTY OF BHEL. IT MUST NOT BE USED DIRECTLY OR INDIRECTLY IN ANY WAY DETRIMENTAL TO THE INTEREST OF BHEL

REV	DATE	ALTERED : CHD & APPD :
01		

CORPORATE DRG ID:TP-DG-4-10-135-06897/00

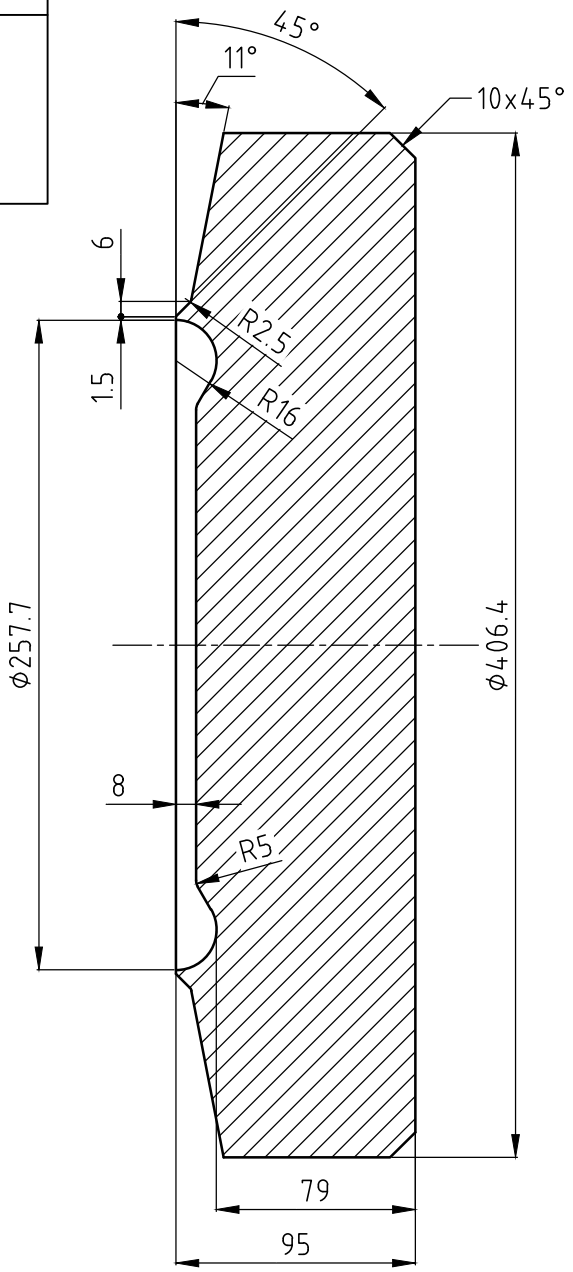

NOTE: FOR DESIGN PARAMETERS REFER ASSEMBLY DRAWING.

	FLAT END COVER ϕ406.4; T=79 (MIN.)		920701300000	A		84.720
			SA182F12CL2			
VARIANT NUMBER	DESCRIPTION	STD	MATERIAL CODE	A/C/P	UNIT	UNIT WEIGHT
			MATERIAL SPECN			QUANTITY

Bharat Heavy Electricals Ltd UNIT: HIGH PRESSURE BOILER PLANT TIRUCHIRAPALLI – 620014 355–056	DRN	SAIKUMAR		04.06.2024
	CHD	NIRMAL RAJ		06.06.2024
	APPD	NIRMAL RAJ		06.06.2024

DEPT	ALL DIMENSIONS ARE IN MM	PROJECTION	SCALE	WEIGHT (Kg)	REF TO ASSY / OLD DWG
PP			NTS	84.720	
CODE 121					

TITLE	DRAWING NO :	REV
FLAT END COVER	4-10-135-06897	00

CORPORATE DRG ID:TP-DG-4-10-135-06897/00

CAUTION: THE INFMN ON THIS DOCUMENT IS THE PROPERTY OF BHEL. IT MUST NOT BE USED DIRECTLY OR INDIRECTLY IN ANY WAY DETRIMENTAL TO THE INTEREST OF BHEL

REV	DATE	ALTERED : CHD & APPD :
01		

CORPORATE DRG ID:TP-DG-4-10-135-06898/00

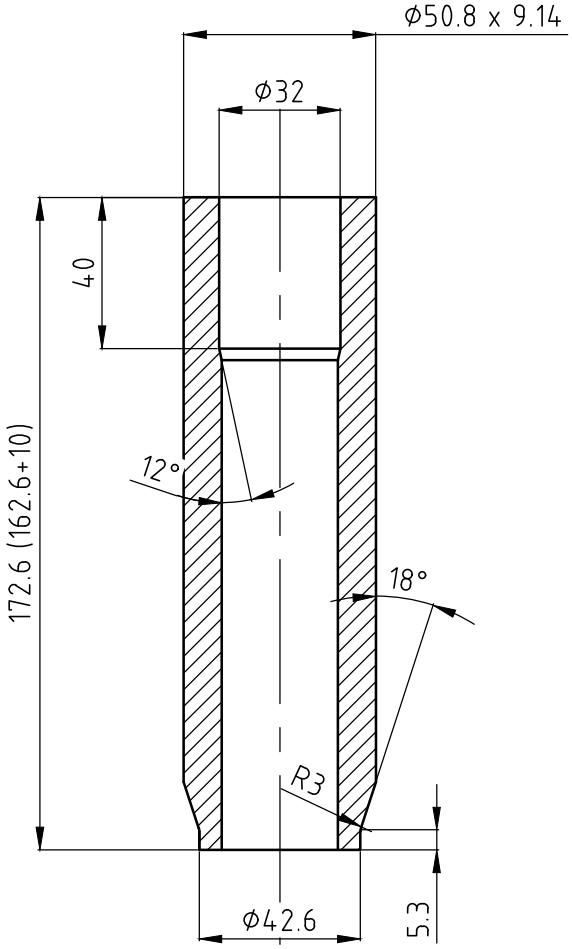

NOTE: FOR DESIGN PARAMETERS REFER ASSEMBLY DRAWING.

VARIANT NUMBER	DESCRIPTION	STD	MATERIAL CODE / MATERIAL SPECN	A/C/P	UNIT	UNIT WEIGHT / QUANTITY
	NIPPLE Φ50.8 X 9.14 162.6 + 10 LONG		154893461501 SA213T22	A		1.600

Bharat Heavy Electricals Ltd UNIT: HIGH PRESSURE BOILER PLANT TIRUCHIRAPALLI – 620014 355–056	DRN	SAIKUMAR		04.06.2024
	CHD	NIRMAL RAJ		06.06.2024
	APPD	NIRMAL RAJ		06.06.2024

DEPT	ALL DIMENSIONS ARE IN MM	PROJECTION	SCALE	WEIGHT (Kg)	REF TO ASSY / OLD DWG
PP			NTS	1.600	
CODE 121					

TITLE	DRAWING NO :	REV
NIPPLE	4-10-135-06898	00

CORPORATE DRG ID:TP-DG-4-10-135-06898/00

CORPORATE DRG ID:TP-DG-4-10-176-06896/00

REV	DATE	ALTERED
		CHD & APPD

CAUTION : The information on this document is the property of BHARAT HEAVY ELECTRICALS LTD. It must not be used directly or indirectly in any way detrimental to the interest of the company.

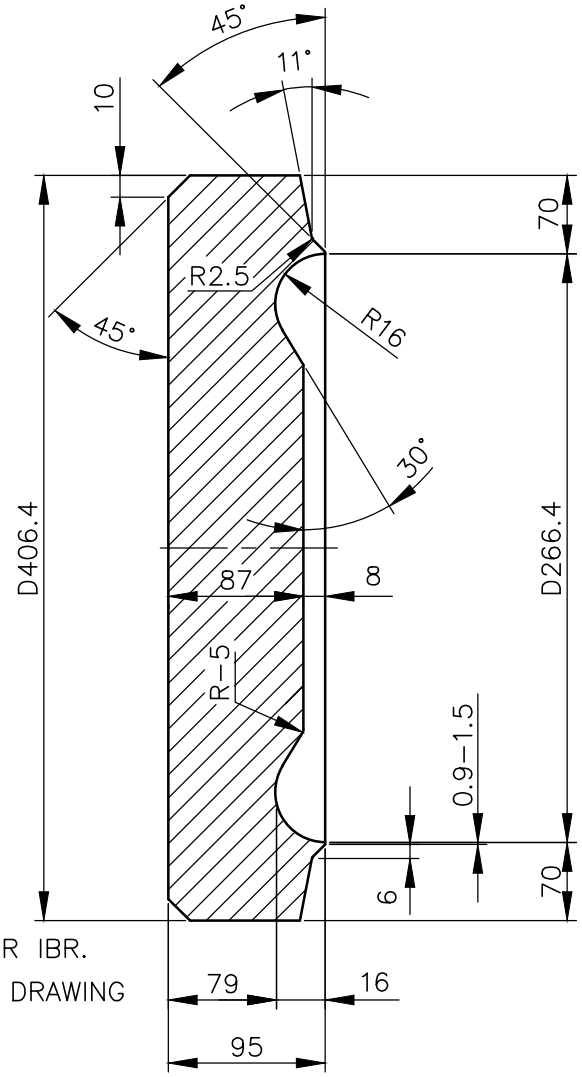

NOTE:

01. DESIGN,MANUFACTURE & INSPECTION AS PER IBR.
02. FOR DESIGN PARAMETER, REFER ASSEMBLY DRAWING

VARIANT NUMBER	DESCRIPTION	STD	MATERIAL CODE / MATERIAL SPECN	A/c/P	UNIT	UNIT WEIGHT / QUANTITY
	FLAT END COVER D406.4,T(MIN)=79		920701300000 / SA182F12CL2	A		86.000

Bharat Heavy Electricals Ltd
UNIT: HIGH PRESSURE BOILER PLANT
TIRUCHIRAPALLI - 620014
355-056

	NAME	SIGNATURE	DATE
DRN	T.SHYJU		17.05.24
CHD	T.RAJAGOPALAN		17.05.24
APPD	N.NIRMAL RAJ		17.05.24

DEPT	ALL DIMENSIONS ARE IN MM	PROJECTION	SCALE	WEIGHT (Kg)	REF TO ASSY / OLD DWG
PP / CODE 121			N.T.S	86.000	

TITLE: FLAT END COVER D406.4

DRAWING NO : 4-10-176-06896 REV 00

A4 SIZE

CORPORATE DRG ID:TP-DG-4-10-176-06896/00

CORPORATE DRG ID:TP-DG-4-10-183-06882/01

CAUTION: THE INFMN ON THIS DOCUMENT IS THE PROPERTY OF BHEL. IT MUST NOT BE USED DIRECTLY OR INDIRECTLY IN ANY WAY DETRIMENTAL TO THE INTEREST OF BHEL

REV	DATE	ALTERED : KARTHIK
01	16.10.24	CHD & APPD : VENKAT

DRAWING UPDATED

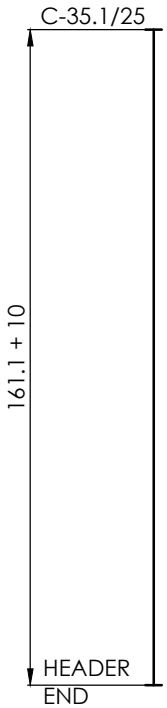

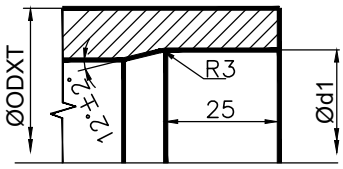

STYLE–C

NOTES:

01. DESIGN,MANUFACTURING AND INSPECTION AS PER IBR.
02. FOR DESIGN PARAMETERS REFER ASSY DWG.
03. BUTT WELD EDGE PREPARATION AS PER STYLE–C.

VARIANT NUMBER	DESCRIPTION	STD	MATERIAL CODE / MATERIAL SPECN	A/C/P	UNIT	UNIT WEIGHT / QUANTITY
	NIPPLE D50.8X7.62 161.1+10 LONG		154940160001 SA213T12	A		1.470

Bharat Heavy Electricals Ltd UNIT: HIGH PRESSURE BOILER PLANT TIRUCHIRAPALLI – 620014 355–056	DRN	KARTHIK	...sd...	25.04.24
	CHD	VENKAT	...sd...	26.04.24
	APPD	SAI KUMAR	...sd...	27.04.24

DEPT	ALL DIMENSIONS ARE IN MM	PROJECTION	SCALE	WEIGHT (Kg)	REF TO ASSY / OLD DWG
PP / CODE 121			N.T.S	1.470	

TITLE	DRAWING NO :	REV
NIPPLE (Ø50.8 x 7.62)	4-10-183-06882	01

CORPORATE DRG ID:TP-DG-4-10-183-06882/01

REV	DATE	ALTERED
		CHD & APPD

CAUTION : The information on this document is the property of BHARAT HEAVY ELECTRICALS LTD. It must not be used directly or indirectly in any way detrimental to the interest of the company.

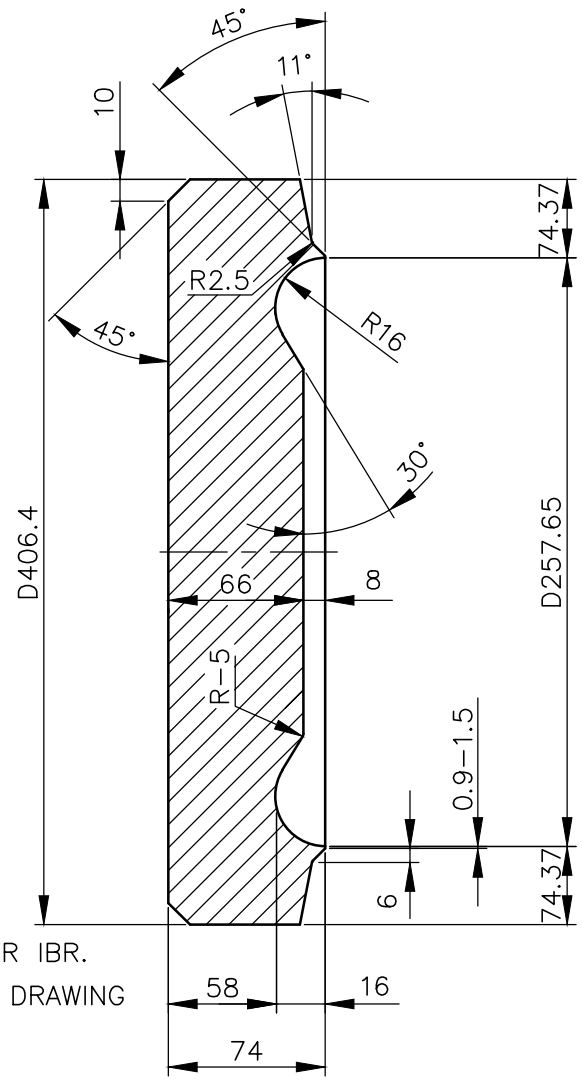

NOTE:

01. DESIGN,MANUFACTURE & INSPECTION AS PER IBR.
02. FOR DESIGN PARAMETER, REFER ASSEMBLY DRAWING

VARIANT NUMBER	DESCRIPTION	STD	MATERIAL CODE / MATERIAL SPECN	A/C/P	UNIT	UNIT WEIGHT / QUANTITY
	FLAT END COVER D406.4x74,		920701300000 / SA182F12CL2	A		75.00

Bharat Heavy Electricals Ltd
UNIT: HIGH PRESSURE BOILER PLANT
TIRUCHIRAPALLI - 620014
355-056

	NAME	SIGNATURE	DATE
DRN	KARTHIK	....sd....	25.04.24
CHD	VENKAT	....sd....	26.04.24
APPD	SAI KUMAR	....sd....	27.04.24

DEPT	ALL DIMENSIONS ARE IN MM	PROJECTION	SCALE	WEIGHT (Kg)	REF TO ASSY / OLD DWG
PP			N.T.S	75.00	4-10-183-06729
CODE 121					

TITLE: FLAT END COVER D406.4

DRAWING NO : 4-10-183-06883

REV: 00

A4 SIZE

REV	DATE	ALTERED
		CHD & APPD

CAUTION : The information on this document is the property of BHARAT HEAVY ELECTRICALS LTD. It must not be used directly or indirectly in any way detrimental to the interest of the company.

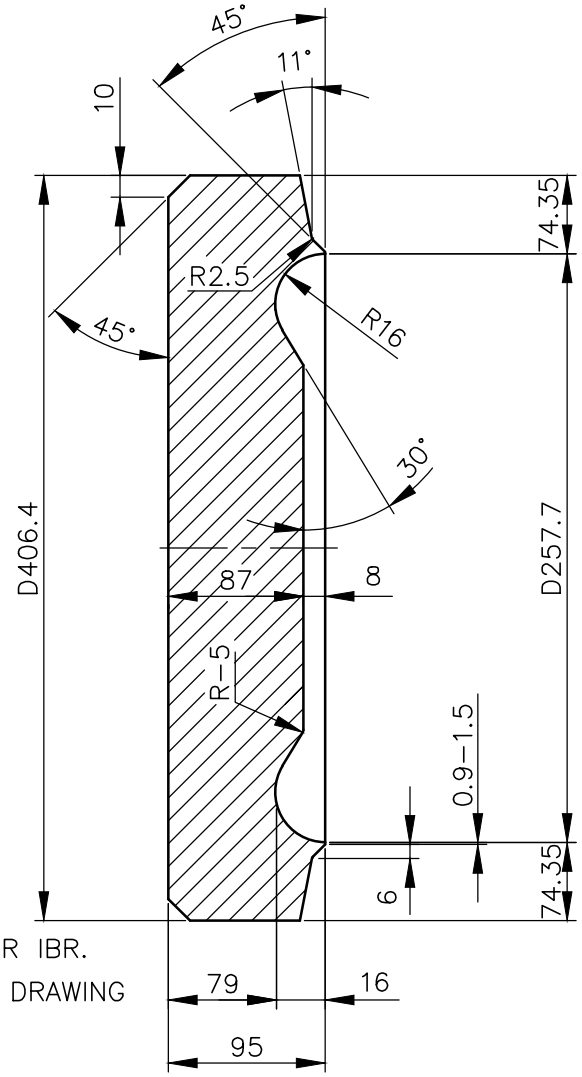

NOTE:

01. DESIGN,MANUFACTURE & INSPECTION AS PER IBR.
02. FOR DESIGN PARAMETER, REFER ASSEMBLY DRAWING

VARIANT NUMBER	DESCRIPTION	STD	MATERIAL CODE / MATERIAL SPECN	A/C/P	UNIT	UNIT WEIGHT / QUANTITY
	FLAT END COVER D406.4x95,T(MIN)=79		920701300000 / SA182F12CL2	A		88.000

Bharat Heavy Electricals Ltd
UNIT: HIGH PRESSURE BOILER PLANT
TIRUCHIRAPALLI - 620014
355-056

	NAME	SIGNATURE	DATE
DRN	T.SHYJU		16.04.24
CHD	VENKAT DOODI		16.04.24
APPD	NIRMAL RAJ		16.04.24

DEPT	ALL DIMENSIONS ARE IN MM	PROJECTION	SCALE	WEIGHT (Kg)	REF TO ASSY / OLD DWG
PP / CODE 121			N.T.S	88.000	

TITLE: FLAT END COVER D406.4

DRAWING NO : 4-10-184-06886

REV: 00

A4 SIZE

CORPORATE DRG ID:TP-DG-4-10-191-06881/00

CAUTION: THE INFMN ON THIS DOCUMENT IS THE PROPERTY OF BHEL. IT MUST NOT BE USED DIRECTLY OR INDIRECTLY IN ANY WAY DETRIMENTAL TO THE INTEREST OF BHEL

REV	DATE	ALTERED :
01		CHD & APPD :

FOR TOLERANCES OF UNTOLERANCED DIMENSIONS DURING MANUFACTURE REFER PLANT STD. NO TP 023 0299

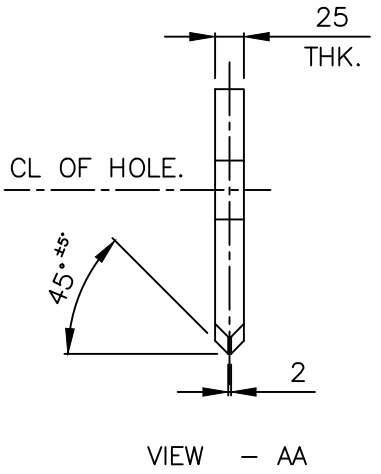

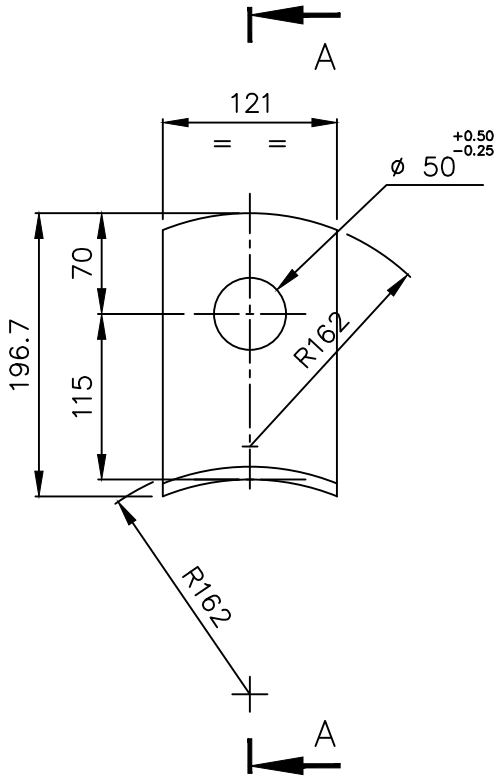

VARIANT NUMBER	DESCRIPTION	STD	MATERIAL CODE / MATERIAL SPECN	A/C/P	UNIT	UNIT WEIGHT / QUANTITY
	LUG 25X121X196.7		150422820000 / SA387GR12CL2	C		3.375

Bharat Heavy Electricals Ltd UNIT: HIGH PRESSURE BOILER PLANT TIRUCHIRAPALLI – 620014 355–056		NAME	SIGNATURE	DATE
	DRN	SAROJ		01.04.24
	CHD	DHANANJAYAN		01.04.24
	APPD	NIRMALRAJ		01.04.24

DEPT	ALL DIMENSIONS ARE IN MM	PROJECTION	SCALE	WEIGHT (Kg)	REF TO ASSY / OLD DWG
PP / CODE 121			N.T.S	3.375	4–10–191–06587

TITLE	DRAWING NO :	REV
SUSPENSION LUG	4–10–191–06881	00

CORPORATE DRG ID:TP-DG-4-10-191-06881/00

REV	DATE	ALTERED
		CHD & APPD

CAUTION : The information on this document is the property of BHARAT HEAVY ELECTRICALS LTD. It must not be used directly or indirectly in any way detrimental to the interest of the company.

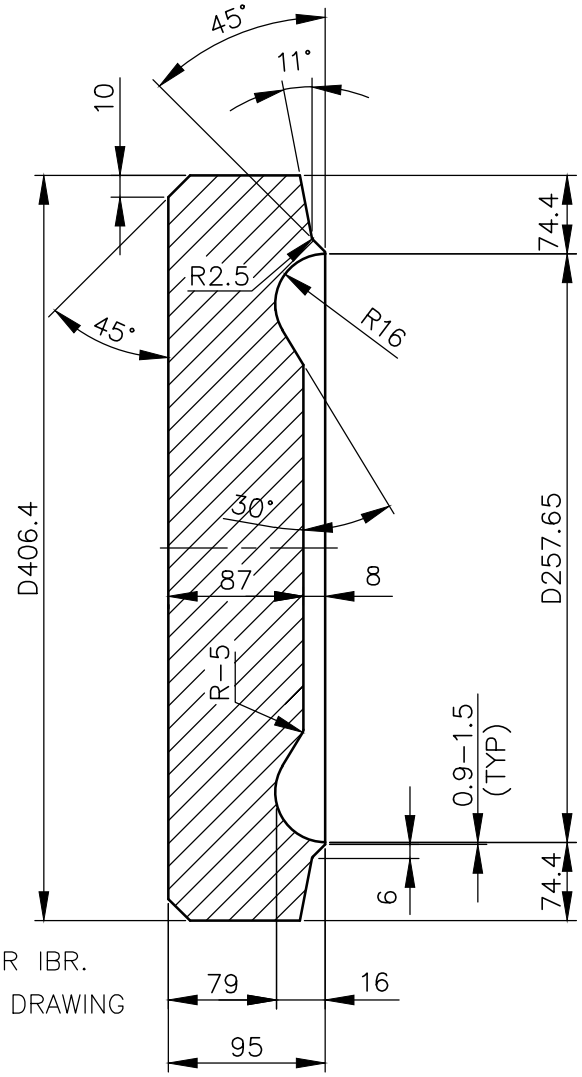

NOTE:

01. DESIGN,MANUFACTURE & INSPECTION AS PER IBR.
02. FOR DESIGN PARAMETER, REFER ASSEMBLY DRAWING

VARIANT NUMBER	DESCRIPTION	STD	MATERIAL CODE / MATERIAL SPECN	A/C/P	UNIT	UNIT WEIGHT / QUANTITY
	FLAT END COVER D406.4; T(MIN)=79		920701300000 / SA 182 F12 CL2	A		84.700

Bharat Heavy Electricals Ltd
UNIT: HIGH PRESSURE BOILER PLANT
TIRUCHIRAPALLI - 620014
355-056

	NAME	SIGNATURE	DATE
DRN	SHEEBA S		10.09.24
CHD	T.SHYJU		09.10.24
APPD	R.SAIKUMAR		10.10.24

DEPT	ALL DIMENSIONS ARE IN MM	PROJECTION	SCALE	WEIGHT (Kg)	REF TO ASSY / OLD DWG
PP / CODE 121			N.T.S	84.700	4-10-135-06807

TITLE: FLAT END COVER (D406.4x95)

DRAWING NO : 4-10-235-06907

REV: 00

A4 SIZE

CAUTION: THE INFMN ON THIS DOCUMENT IS THE PROPERTY OF BHEL. IT MUST NOT BE USED DIRECTLY OR INDIRECTLY IN ANY WAY DETRIMENTAL TO THE INTEREST OF BHEL

REV	DATE	ALTERED :
01		CHD & APPD :

FOR TOLERANCES OF UNTOLERANCED DIMENSIONS DURING MANUFACTURE REFER PLANT STD. NO TP 023 0299

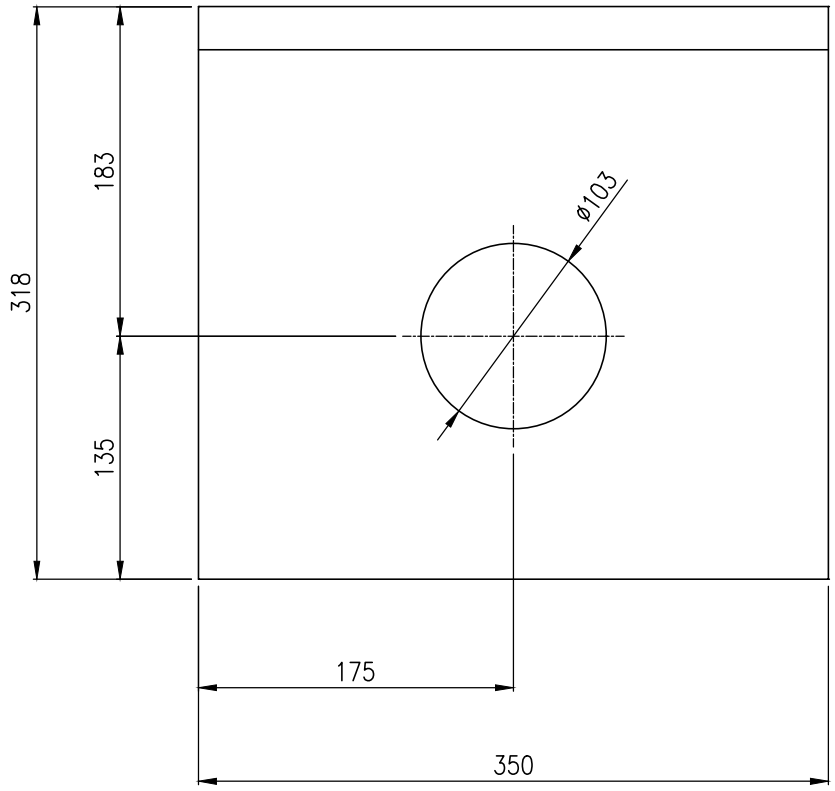

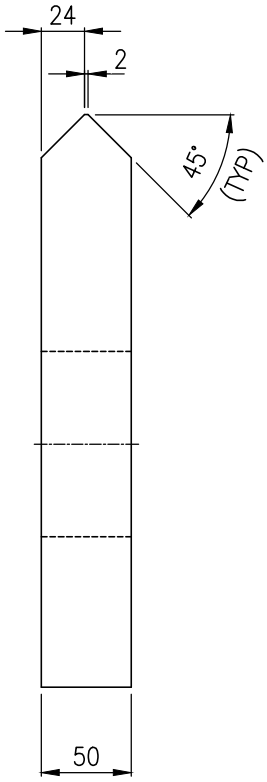

VARIANT NUMBER	DESCRIPTION	STD	MATERIAL CODE / MATERIAL SPECN	A/C/P	UNIT	UNIT WEIGHT / QUANTITY
	LUG PLATE 50 THK 350 x 318		15 042 273 0000 / SA387 Gr22 CL2	C		40.410

Bharat Heavy Electricals Ltd
UNIT: HIGH PRESSURE BOILER PLANT
TIRUCHIRAPALLI – 620014
355–056

	NAME	SIGNATURE	DATE
DRN	SHEEBA S		11.09.24
CHD	T SHYJU		09.10.24
APPD	SAI KUMAR		10.10.24

DEPT	CODE	ALL DIMENSIONS ARE IN MM	PROJECTION	SCALE	WEIGHT (Kg)	REF TO ASSY / OLD DWG
PP	121			NTS	40.410	

TITLE	DRAWING NO :	REV
LUG PLATE	4-10-235-06908	00

CAUTION: THE INFMN ON THIS DOCUMENT IS THE PROPERTY OF BHEL. IT MUST NOT BE USED DIRECTLY OR INDIRECTLY IN ANY WAY DETRIMENTAL TO THE INTEREST OF BHEL

REV	DATE	ALTERED :
01		CHD & APPD :

FOR TOLERANCES OF UNTOLERANCED DIMENSIONS DURING MANUFACTURE REFER PLANT STD. NO TP 023 0299

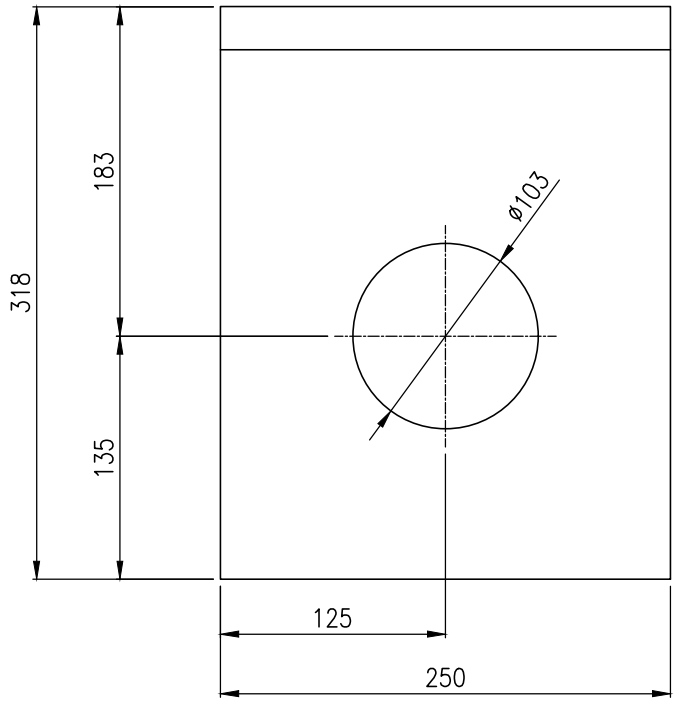

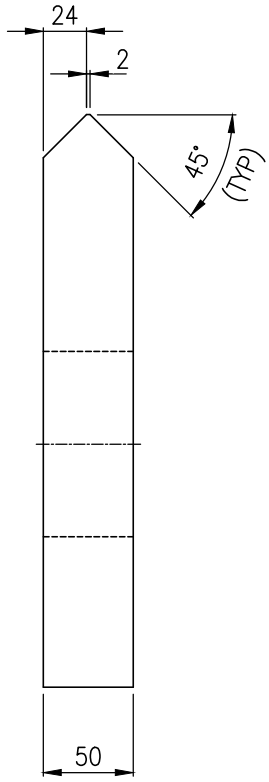

VARIANT NUMBER	DESCRIPTION	STD	MATERIAL CODE / MATERIAL SPECN	A/C/P	UNIT	UNIT WEIGHT / QUANTITY
	LUG PLATE 50 THK 250 x 318		15 042 273 0000 / SA387 Gr22 CL2	C		27.930

Bharat Heavy Electricals Ltd
UNIT: HIGH PRESSURE BOILER PLANT
TIRUCHIRAPALLI – 620014
355–056

	NAME	SIGNATURE	DATE
DRN	SHEEBA S		11.09.24
CHD	T SHYJU		09.10.24
APPD	SAI KUMAR		10.10.24

DEPT	CODE	ALL DIMENSIONS ARE IN MM	PROJECTION	SCALE	WEIGHT (Kg)	REF TO ASSY / OLD DWG
PP	121			NTS	27.930	

TITLE	DRAWING NO :	REV
LUG PLATE	4-10-235-06909	00

CAUTION: THE INFMN ON THIS DOCUMENT IS THE PROPERTY OF BHEL. IT MUST NOT BE USED DIRECTLY OR INDIRECTLY IN ANY WAY DETRIMENTAL TO THE INTEREST OF BHEL

REV	DATE	ALTERED : CHD & APPD :
01		

CORPORATE DRG ID:TP-DG-4-10-284-06900/00

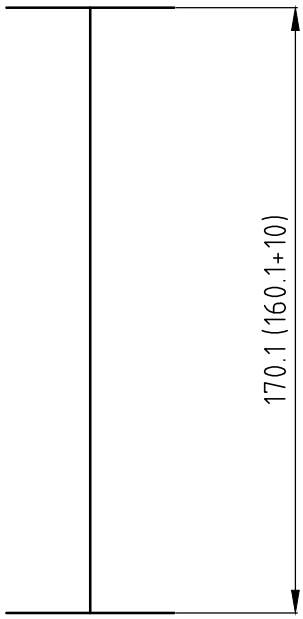

NOTE: FOR DESIGN PARAMETERS REFER ASSEMBLY DRAWING.

VARIANT NUMBER	DESCRIPTION	STD	MATERIAL CODE / MATERIAL SPECN	A/C/P	UNIT	UNIT WEIGHT / QUANTITY
	TUBE Φ44.45 x 6.6 160.1 + 10 LONG		154940250001 SA213T12	A		1.040

Bharat Heavy Electricals Ltd
UNIT: HIGH PRESSURE BOILER PLANT
TIRUCHIRAPALLI – 620014
355–056

	NAME	SIGNATURE	DATE
DRN	SAIKUMAR		06.06.2024
CHD	NIRMAL RAJ		11.06.2024
APPD	NIRMAL RAJ		11.06.2024

DEPT	ALL DIMENSIONS ARE IN MM	PROJECTION	SCALE	WEIGHT (Kg)	REF TO ASSY / OLD DWG
PP			NTS	1.040	
CODE 121					

TITLE: NIPPLE

DRAWING NO : 4-10-284-06900

REV 00

CORPORATE DRG ID:TP-DG-4-10-284-06900/00

CAUTION: THE INFMN ON THIS DOCUMENT IS THE PROPERTY OF BHEL. IT MUST NOT BE USED DIRECTLY OR INDIRECTLY IN ANY WAY DETRIMENTAL TO THE INTEREST OF BHEL

REV	DATE	ALTERED : CHD & APPD :
01		

CORPORATE DRG ID:TP-DG-4-10-284-06901/00

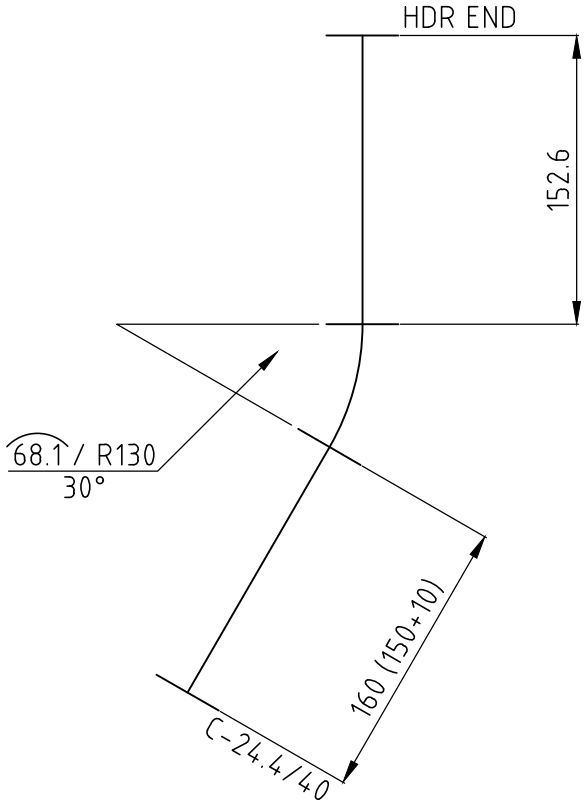

NOTE: FOR DESIGN PARAMETERS REFER ASSEMBLY DRAWING.

	TUBE Ø38.1 x 6.6 340.7 + 10 LONG		154940200001 SA213T12	A		1.840
VARIANT NUMBER	DESCRIPTION	STD	MATERIAL CODE MATERIAL SPECN	A/C/P	UNIT	UNIT WEIGHT QUANTITY

Bharat Heavy Electricals Ltd UNIT: HIGH PRESSURE BOILER PLANT TIRUCHIRAPALLI – 620014 355–056	DRN	SAIKUMAR		06.06.2024
	CHD	NIRMAL RAJ		11.06.2024
	APPD	NIRMAL RAJ		11.06.2024

DEPT	ALL DIMENSIONS ARE IN MM	PROJECTION	SCALE	WEIGHT (Kg)	REF TO ASSY / OLD DWG
PP CODE 121			NTS	1.840	

TITLE	DRAWING NO :	REV
NIPPLE	4-10-284-06901	00

CORPORATE DRG ID:TP-DG-4-10-284-06901/00

CORPORATE DRG ID:TP-DG-4-19-701-08332/00

CAUTION: THE INFMN ON THIS DOCUMENT IS THE PROPERTY OF BHEL. IT MUST NOT BE USED DIRECTLY OR INDIRECTLY IN ANY WAY DETRIMENTAL TO THE INTEREST OF BHEL

REV	DATE	ALTERED :
01		CHD & APPD :

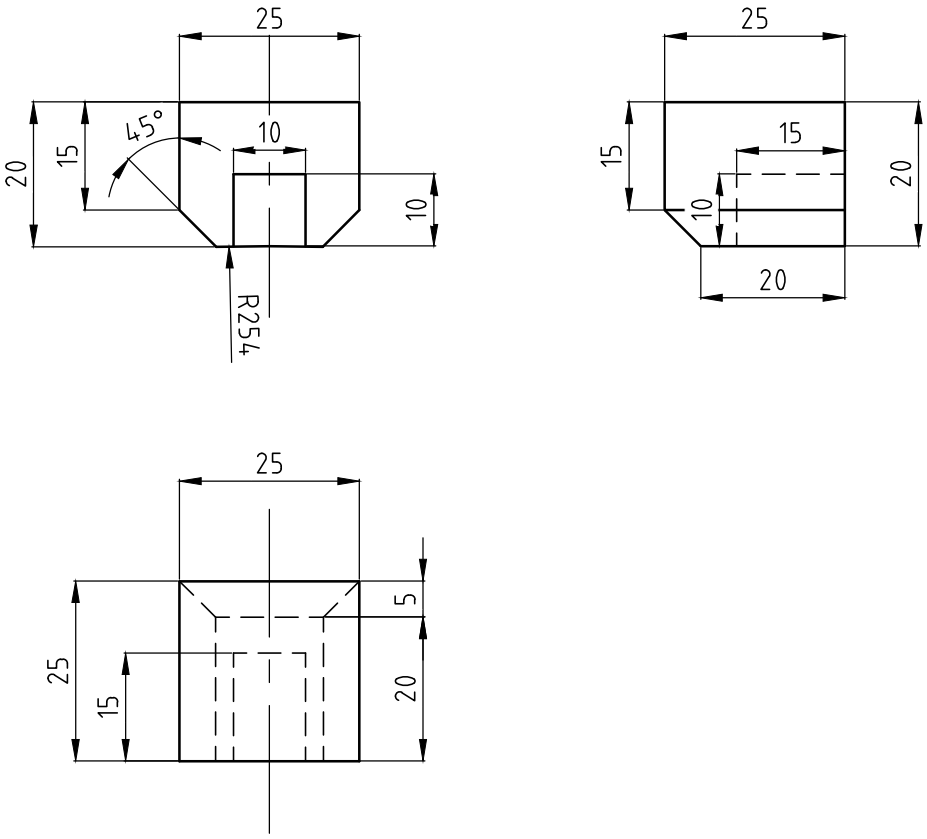

TO BE MACHINED FROM ROUND ϕ40, SA105

VARIANT NUMBER	DESCRIPTION	STD	MATERIAL CODE / MATERIAL SPECN	A/C/P	UNIT	UNIT WEIGHT / QUANTITY
	TC PAD		150391410000	C		0.100
			SA105			

Bharat Heavy Electricals Ltd UNIT: HIGH PRESSURE BOILER PLANT TIRUCHIRAPALLI – 620014 355–056	DRN	SAROJ KR		05.08.2024
	CHD	SAI KUMAR		06.08.2024
	APPD	NIRMAL RAJ		06.08.2024

DEPT	ALL DIMENSIONS ARE IN MM	PROJECTION	SCALE	WEIGHT (Kg)	REF TO ASSY / OLD DWG
PP			NTS	0.100	
CODE 121					

TITLE	DRAWING NO :	REV
TC PAD	4-19-701-08332	00

CORPORATE DRG ID:TP-DG-4-19-701-08332/00