Bharat Heavy Electricals Limited

Fabrication Stamping &Insulator Plant
Jagdishpur, Amethi – 227817(U.P.)

Office: 91(05361) 224119
Fax: 91(05361) 224243

MATERIAL MANAGEMENT

Notice Inviting Tender

Tender Enquiry No: TE-109 **Dtd: 26.05.2022**

E-Tenders are invited in Two Part Bid System for entering into a Frame Work Agreement (Rate Contract) for Supply of Wooden Boxes as per BHEL drawing of respective Requisition mail/letter valid for one year from MSE suppliers only.

(I) General:

1. The tender will be under Two-part bid system i.e PQR cum Techno commercial bid and Price bid. Price bid shall be opened to those bidders who will qualify in PQR cum Techno-commercial evaluation.
   Following is the Pre-Qualification Requirement.

Sl No	Criteria	Supporting document
1	Experience and past performance on similar item/same item [wooden box] for last 02(two) years to reputed companies. A copy of purchase order is required as a documentary proof. (The period of 2 years shall be considered from date of opening of Part-I bid)	PO Copy
2	Supplier should be manufacturer of wooden boxes/items. Supplier should have at least one saw machine.	Machinery List and document of Manufacturer
3	Financial standing through latest Annual report(balance sheet and Profit & Loss Account & ITR) of last 3 years i.e. FY 2018-19, FY 2019-20, FY 2020-21 or latest	balance sheet and Profit & Loss Account & ITR
4	Vendor should have capacity to manufacture and supply (as per drawings and technical specifications & general terms and conditions) at least 100 boxes/month to BHEL FSIP Jagdishpur. Vendor's capacity to supply per month implies vendor's ability to supply such quantities of items meeting the quality requirements and delivery schedules. Vendor shall intimate only such capacity that can be allocated to BHEL FSIP Jagdishpur and not their total capacity. The vendors having capacity less than 100 boxes per month will not be eligible as per technical criteria mentioned above.	Self-declaration

2. **Mode of Submission of offer:** Mode of Submission of offer: Being e-tender, offer will be submitted online through e-tender portal:
   https://eprocurebhel.co.in/nicgep/app
   Important dates are given below:

EVENT	SCHEDULE
Last Date & Time for receipt of tender	Date : **06.06.2022** Time : 14.00 hrs (IST)
Tender Part I opening date & Time	Date **: 06.06.2022** Time : 15.30 hrs (IST)

3. In case of any difficulty faced while registering on BHEL's e-Procurement portal developed by NIC, queries may be addressed to 0120-4001002, 0120-4001005 and 0120-6277787; email: support-eproc@nic.in. These details are also available on 'Contact Us' page of the portal
4. Offer to be submitted only on e-procurement portal. Hard copy/email offer is not required to be submitted to BHEL-FSIP. **Any offer received in Hard copy/Email shall not be accepted and straightway rejected by BHEL-FSIP**

5. The offer shall be submitted as per the instructions of tender documents and as detailed in this NIT. Non acceptance of any term may lead to rejection of quotation.
6. **This tender is for Rate contract (Frame Work Agreement) and shall be valid for one year from date of finalization of tender. BHEL shall intimate by requisition letter/mail within validity of rate contract for supply of Wooden Boxes.**
7. **Supplier who are not registered with BHEL FSIP, may get registered through dedicated portal link : https://www.bhel.com/supplier-registration**
8. **Rate shall be firm and there is no any price variation clause.**
9. **Supplier has to quote prices in Rs per Cubic Meter.**
10. **Please note that BHEL shall intimate by requisition letter/mail in numbers after calculating the rate by multiplying the drawing cubic meter volume of boxes with finalized rate (Rs/cubic meter) against Rate Contract finalized PO. BHEL may release requisition letter/mail of smaller quantity e.g 11, Nos, 30 Nos, 20 Nos etc. Bidders should quote their rates by considering the above facts.**

(II) Item Description and Scope of Supply:

Sl.No.	Material Code	Item Description	Quantity	Unit
1	702200012345	Wooden Packing Box (Ceralin)	16	Cubic Meter

Quantity Variation 20% is applicable after confirmation from BHEL. The above requirement is tentative. BHEL is not bound to release orders for above quantity in a period of one year, BHEL shall release order only upon requirement. Quantity variation +20% is allowed. It means based on requirement, BHEL may release order 20% more than the above value.

(III) Attachment to Tender Enquiry:

Sl. No.	Description	Annexure/Enclosure
1	General Terms & Conditions (Sister concern declaration and Annexure I)	Annexure: II
2	Special terms and Conditions	Annexure: III
3	Reference Drawing	Attached
4	Technical Documents	Attached
5	Technical Specifications And Conditions For Annual Rate Contract For Supply Of Wooden Packing Boxes/Crate	Attached
6	Suppliers capacity declaration format	Enclosed (Annexure IV)

7	PQR cum Techno commercial Format	Enclosed (Annexure V)

(IV) Contact person details:

Manmeet Kumar
Dy. Manager –MM
Phone: 05361 224126/9478471278
E-mail: manmeet@bhel.in

SPECIAL TERMS AND CONDITIONS OF ENQUIRY (TE -109 dated 26.05.2022)

Sl. No.	Description
1	**Test Certificate/Dimension Report**
	Supplier shall have to submit Dimension Report at the time of supply.
2	**Product Requirement**
	Supplier has to supply material as per drawings, Technical documents as per requisition mail/letter. Reference drawings and technical documents are attached.
3	**Penalty**
	LD shall be 0.5 % of the undelivered portion per week of delay or part thereof subject to a maximum of 10% of the total order value. Other terms as per GTC.
4	**Tender Finalization**
	Tender Finalization shall be through price bid opening.

PQR cum Techno-Commercial Format

Tender Enquiry No- TE-109 dated 26.05.2022 **Annexure-V**

Technical and Other Requirements			Suppliers Remarks
Sl No	**Description**	**BHEL Requirement**	
1	Experience and past performance on similar item/same item [wooden box] for last 02(two) years to reputed companies. A copy of purchase order is required as a documentary proof. (The period of 2 years shall be considered from date of opening of Part-I bid)	PO Copy	
2	Supplier should be manufacturer of wooden boxes/items. Supplier should have at least one saw machine.	Machinery List and document of Manufacturer (Like MSE document/ISO document/self declaration etc)	
3	Financial standing through latest Annual report(balance sheet and Profit & Loss Account & ITR) of last 3 years i.e. FY 2018-19, FY 2019-20, FY 2020-21 or latest	Balance sheet and Profit & Loss Account & ITR	
4	Vendor should have capacity to manufacture and supply (as per drawings and technical specifications & general terms and conditions) at least 100 boxes/month to BHEL FSIP Jagdishpur. Vendor's capacity to supply per month implies vendor's ability to supply such quantities of items meeting the quality requirements and delivery schedules. Vendor shall intimate only such capacity that can be allocated to BHEL FSIP Jagdishpur and not their total capacity. The vendors having capacity less than 100 boxes per month will not be eligible as per technical criteria mentioned above	Self Declaration	
5	GST registraion Certificate	To be submitted	
6	Registraion Certificate under MSME Act if applicable	To be submitted	
7	Udhyam Certificate if applicable	To be submitted	
8	CA certificate (Annexure I), if applicable	To be submitted	
9	Declaration by vendor for Sister Concern	Seal and signed	
10	MSE owned by SC/ST declration if applicable	Yes/No, If Yes, Provide supporting document	
11	MSE owned by Women declration if applicable	Yes/No, If Yes, Provide supporting document	
12	PAN Card	To be submitted	
13	Acceptance of NIT, STC and GTC terms and conditions	Yes/No	
14	Capacity Declaration	To be submitted	
	Remarks if any		

Seal and Signed by Bidder

666910/2022/FSIP-FSIPMMX000

GENERAL TERMS AND CONDITIONS OF ENQUIRY

GTC/FSIP/PUR/01 Rev:01

Sl. No.	Description
1	**General:**
A	These General Terms & Conditions (GTC) shall apply to all enquiries, notice inviting tenders, request for quotations concerning the supply of goods and / or rendering of services to Bharat Heavy Electricals Ltd., Jagdishpur (hereinafter referred to as BHEL or the Purchaser) or its Projects / Customers. Special / supplementary terms and conditions of enquiry, if any, will override the conditions in this annexure.
2	**General Instructions - Common for Indigenous & Foreign enquiries**
A	**Through E- procurement-**
	1. Offer shall be submitted by the bidders in single / two parts as called in Tender enquiry. **2.** Bid Part - I Technical cum Commercial bid Bid Part - II Price bid **3.** Suppliers shall quote ***price*** on BHEL/authorised third party service provider **e-procurement site.** Any deviation from the price format shall be clearly brought out in the offer Bid part-I. The offer shall be uploaded on BHEL e-procurement site using Class III digital signature. **Bidders to put sign and seal on all the uploaded documents.** The quotation should be uploaded on the site before due date and time. Part-I of the bid shall contain complete item-wise scope of supply as offered vis-à-vis the scope of supply as per enquiry, all commercial terms and conditions etc. It is expected that bidders shall meet all our technical and commercial requirements and shall not deviate from them.
B	**Through Tender Room**
B1	Sealed bids are invited for scope of Supply / Services as detailed in the enquiry. The quotation should be neatly typed and free from over writing/ erasures. Any correction or addition must be authenticated. The bid should be submitted in English or Hindi language. Relevant enclosures, supporting documents, catalogue, samples, if any, as required as per Notice Inviting Tender (NIT) conditions shall be sent along with technical offer. Rate should be quoted in the units asked for in the enquiry. The rates should be quoted both in figures and words. In case of discrepancy in figures and words, the rates quoted in words shall be considered.
B2	Bids shall be submitted in a Sealed cover with Enquiry No., Due date and Bidder's name indicated on the cover. In case of Two part Bid, technical bid containing technical offer, mandatory documents filled-in & signed; and **un-priced copy** of the tender should be kept in one envelope. Price Bid containing only the price (as called for in the price format where required) should be kept in a separate envelope. Both envelopes indicating Part-I or Part-II as the case may be to be put in a bigger envelope, which should be addressed to In charge, Tender Box, Administrative Building BHEL FSIP, Industrial Area Jagdishpur, Dist. Amethi-227817, (U.P.) India. Enquiry No., due date and bidder's name must be mentioned on all envelopes. Offer must reach tender box of BHEL FSIP Jagdishpur by 15.00 PM IST on the enquiry due date.
B3	Offer received after **15.00 PM IST** of the due date will be termed as "Late Tender" and shall not be considered.
B4	Bidder can also submit offer through email, if called for in the enquiry, at the email address indicated in the enquiry. Such email offers shall be sent only on designated email-id to reach before 15.00 PM IST on the tender due date. BHEL will not be responsible for incomplete offers and the ones delivered late through e-mail.
C	Commercial Conditions quoted by the vendor in any place including as stated in bidder's 'General Terms and Conditions' if any, shall not be binding on the Purchaser and the conditions contained in this annexure, including special conditions, if any, for this enquiry shall only prevail.
D	**Wherever Reverse Auction is called for** **REVERSE AUCTION (RA):** "BHEL shall be resorting to Reverse Auction (RA) (Guidelines as available on www.bhel.com) for this tender. RA shall be conducted among the techno-commercially qualified bidders. Price bids of all techno-commercially qualified bidders shall be opened and same shall be considered for RA. In case any bidder(s) do (es) not participate in online Reverse Auction, their sealed envelope price bid along with applicable loading, if any, shall be considered for ranking." **Wherever Reverse Auction is not called for** **PRICE BID OPENING:** Tender shall be finalized via price bid opening of all the techno-commercially qualified bidders in place of RA.

	Price bid should contain only price of item. Anything other than price of item shall be invalid. *Tender finalization mode (RA or Price bid opening) shall be specified in Special / supplementary terms and conditions of enquiry.*
E	The goods offered shall confirm to BHEL specifications and / or National/International standards as mentioned in the Enquiry and the bidder is required to confirm his unconditional acceptance to the same. Vendors, seeking deviations from the specifications and any other conditions, may indicate the same clearly on a separate sheet, with reasons for such deviations. **BHEL reserves the right to reject the offer with deviations or load the deviations suitably for evaluation.**
F	Offers shall be submitted directly by vendor or his authorized agent only. Unsolicited offers shall be summarily rejected.
G	Bid in single part or techno-commercial bid in **two-part** system (as the case may be) will be opened on the due date. In case of two part bid, price bids of techno-commercially acceptable bidder(s) only shall be opened on the assigned date.
H	In case of changes in scope and / or technical specification and / or commercial terms & conditions, having price implication, techno-commercially acceptable bidders shall be asked by BHEL to submit the impact of such changes on their price bids. In case a bidder opts to submit revised price bid instead of impact called for, then latest price bid shall prevail.
I	The bidders will submit Integrity Pact, duly signed by its authorized signatory, where called for in the enquiry.
J	Wherever the enquiry is issued to unregistered vendor, the bidder shall visit ' www.bhel.com and online filled up "Supplier Registration Form" on BHEL link (http://supplier.bhel.in) along-with all the supporting documents to be submitted.
K	BHEL expects that the bidder must respond to the enquiry. Regret letter, with valid reasons for not participating in the tender will be submitted where the bidder is unable to submit offer. Repeated lack of response on the part of vendor (Four non responses) may lead to his deletion from BHEL's approved vendor list.
L	Goods shall be properly packed to avoid transit damage. Suitable markings shall be provided to identify the goods with that of the PO No. and the consignee details.
M	Goods shall be consigned to Store Officer, BHEL, FSIP, IA Jagdishpur Dist- Amethi (U.P.) India, unless otherwise specified in the PO.
N	All corrigenda, addenda, amendments, time extensions, clarifications etc. to the tender will be hosted on BHEL website (www.bhel.com)/https://eprocure.gov.in/epublish/app/ https://eprocurebhel.co.in/nicgep/app eProcurement website only.
O	**In the course of evaluation, if more than one bidder happens to occupy L-1 status, effective L-1 will be decided by soliciting discounts from the respective L-1bidders.** **In case more than one bidder happens to occupy the L-1 status even after soliciting discounts, the L-1 bidder shall be decided by a toss / draw of lots, in the presence of the respective L-1 bidder (s) or their representative(s). Ranking will be done accordingly. BHEL's decision in such situations shall be final and binding.**
P	The Purchaser can consider awarding tendered quantities among more than one bidder (after acceptance of L1 price by the other bidders) in the manner and proportion disclosed in the tender conditions. Purchaser can also consider awarding of part of the tendered quantity to other than L-1 bidder at **L1** counter offered rates, if the quantity offered by the L-1 bidder is less than the quantity tendered for. BHEL can also award order to L1 bidder/counter offer accepted bidders in case any bidder is not supplying/delaying the supplies and in this case the distributed quantity shall not be considered in loading share. The loading of Order shares on suppliers will also be subject to their performance (Quality, Delivery and Service) for the supplies made against Purchase Orders. The suppliers with consistence good performance will be preferred over poor performance supplier and encouraged with more order share. Depending upon performance in supplies BHEL shall go to redistribute the pending orders/shares of poor performer to other suppliers whose performance in supplies is better.
Q	The bidder shall submit price bid strictly in the price format, wherever provided for, in the enquiry. Any attempt on the part of the bidder to alter the contents of the price bid format in any manner, which in the opinion of BHEL can vitiate the tendering process, will lead to rejection of the bid, ***besides BHEL taking appropriate punitive action as deemed fit.***

R	In case the bidder decides to sub-contract part of his activity / work to some of his vendors, details of such intended subcontracting shall be mentioned in the bid. This will however not absolve the bidder from his contractual obligations and responsibilities.	
S	Wherever the minimum reserved capacity is called for in the tender, the offers of such bidders, who do not quote for the minimum reserved capacity, are liable to be rejected.	
3	**Delivery Terms**	
A	**Indigenous Purchase**	
	Goods shall be delivered on 'FOR Destination' basis (with freight and insurance in bidder scope) to the named destination unless otherwise called for in the enquiry.	
B	**Foreign Purchase — Imports**	
B1	1. Goods shall be despatched by Sea, unless stated otherwise in the enquiry or purchase order. 2. Terms of Delivery for Sea shipment shall be on CFR / CIF basis with 14 days' detention free period for FCL (Full Container Load) Cargo of GP & HC Containers. 3. For other cases - Other than GP & HC Containers, LCL Cargo shall be delivered at Nhava Sheva (JNPT) & Break-bulk Cargo at Mumbai (MPT). 4. For Air consignments, the terms of delivery shall be FCA at BHEL nominated Airport. 5. Freight amount shall be indicated separately in the offer in case of CIP/CFR/CIF. 6. The number of detention free days and destination charges payable to shipping line must be mentioned in your offer and also on the Bill of Lading. 7. Offer received on FOB basis may be considered on an exceptional basis. BHEL will load freight, marine insurance & shipping line port handling charges etc. to work out landed cost at Sea Port. 8. Please visit BHEL Bhopal website www.bhelbpl.co.in for details of named Air ports and Sea ports. Name of the gateway port so chosen by the Seller shall be indicated by the Bidder in his offer.	
B2	1. For delivery of FCL (Full Container Load) cargo, the Bidder shall provide minimum **14 days' detention free period** from the date of delivery at Port of Discharge / Place of Delivery (in case of ICD). Wherever the detention free period offered is less than 14 days, the bids shall be **loaded** for the period short of 14 days' period. 2. *Port Congestion charges or any additional charges claimed by the shipping line at Port of Discharge / Place of Delivery shall be to the Seller's account.*	
4	**Vendor's particulars & logistics information (Bidder to give details against each of the provisions)**	
A	Name of the vendor's executive to deal with this tender / project	
B	E-mail address of the contact person	
C	Telephone no. of the contact person	
D	Name of location from where the goods shall be offered for inspection and dispatch	
5	**Additional logistics information for Imports**	
A	Bid currency	
B	Charges applicable at discharge port up to BHEL's CFS (Container Freight Station) to be indicated in your offer and on the B/L	
C	Name of Airport in the country of dispatch for FCA delivery terms	
D	Estimated number, type & size of containers for delivery of tendered	

	quantity (applicable where the goods are to be sent in FCL)	
E	No. of packages with cumulative gross weight and CBM volume (applicable for LCL & Break-bulk shipment)	
F	Approx. distance in km. from Vendor's works to Port of Loading	Sea port /Air port
6	**Delivery Schedule & Completion date**	
A	• Instead of writing specific date against delivery offered, bidder shall commit delivery period in number of days / weeks/ months to suit the delivery period indicated in the enquiry. • Commencement of delivery period shall be reckoned from the date of PO / LOI or any other agreed milestone. • Seller shall deliver the goods in the manner and schedule agreed under the Purchase order. • Goods shall be delivered within contractual period or any extension thereof, if any, granted by the Purchaser. • If delivery is linked to approval of documents, time for submission of such documents to be indicated and delivery period to be indicated from approval of documents. This delivery schedule will be considered for processing delivery extension, wherever applicable. • BHEL reserves the right to cancel the order if material is not delivered within PO scheduled delivery. • In case of unsatisfactory performance on quality / delivery BHEL will have right to discontinue the contract in part or full.	
B	In case of foreign supplies, the date of Bill of Lading (B/L) or AWB shall be taken as actual date of delivery.	
C	In case of Indigenous bidders, the date of delivery at named destination in India shall be taken as contractual delivery completion date where delivery terms are FOR destination. In case of 'Ex-works' delivery terms, the date of LR / RR shall be the contractual delivery completion date.	
7	**Transit Insurance**	
	Except where delivery terms are agreed on CIF basis for Imports & FOR destination basis for indigenous purchases, transit insurance will be covered by BHEL under its Open Marine Transit Insurance Policy. Seller shall inform dispatch particulars with value of consignment to the Purchaser within 07 days of dispatch for BHEL to arrange insurance coverage in its policy. Failure on the part of seller to inform dispatch particulars will make him liable to pay for any transit damages / losses suffered by the Purchaser.	
8	**Force Majeure**	
	Notwithstanding anything contained in the contract, neither the Seller nor the Purchaser shall be held responsible for total or partial non-execution of any of the contractual obligations, should the obligation become unreasonably onerous or impossible due to occurrence of a 'Force Majeure' which directly affects the obligations to be performed by the Purchaser or the Seller; Such events include war, military operations of any nature, blockages, revolutions, insurrections, riots, civil commotions, insurgency, sabotage, acts of public enemy, fires, explosion, epidemics, quarantine restrictions, floods, earthquake, or acts of God, restrictions by Govt. authorities; over which the Seller or the Purchaser has no control. The party claiming to be affected by force majeure shall notify the other party in writing without delay, within two weeks on the intervention and on the cessation of such circumstance. Extension of time sought by the Seller along with supporting evidence and so granted by the Purchaser for the supply/ work affected, if any, shall not be construed as waiver in respect of remaining deliveries. Rescheduling of deliveries on account of force majeure conditions, if so agreed by the Purchaser, will not entail the Seller to claim any increase in the price on whatsoever account. Notwithstanding above provisions, Purchaser shall reserve the right to cancel the order/ Contract, wholly or partly, in order to meet the overall project schedule and make alternative arrangements. If deemed necessary, Purchaser may takeover partly processed material at a mutually agreed price.	
9	**LD/Penalty for delayed performance.**	
A	Subject to force majeure conditions, I. LD shall be 0.5 % of the total order value per week of delay or part thereof subject to a maximum of 10% of the total order value.	

	II. In case of staggered delivery schedule, LD shall be 0.5 % of the undelivered portion per week of delay or part thereof subject to a maximum of 10% of the total order value. However, even if a staggered delivery schedule for Capital Machine / BOPs is agreed, the LD cap will be levied on total order value and not undelivered portion of the order value. III. In case of any amendment/ revision, the LD shall be linked to the amended / revised PO value. Any deviation from the above LD clause shall be specified separately in the NIT. Any loading on LD/penalty clause shall be to the extent to which it is not agreed to by the bidder (at offered value). The same shall be intimated separately prior to price bid opening. **Note:** **"Recovery of LD will include GST as applicable".**
	In case the contractually agreed delivery date falls on a holiday in BHEL FSIP Jagdishpur, the next working day shall be taken as contractual delivery date for compliance and applicability of LD / penalty.
B	**Risk Purchase**
	If the material is not supplied within the agreed delivery period, BHEL reserves the right to cancel the order and purchase the material from alternate source (s) at the Risk and Cost of the Seller. In such an event, it shall be obligatory on the part of seller to make good any loss suffered by the purchaser.
10	**Indian Agents and Agency commission**
A	BHEL prefers to deal directly with Foreign vendor, wherever required, for procurement of Goods. However if the Foreign Principal desires to avail services of an Indian Agent, then the Principal should ensure compliance to "regulatory guidelines" which will require submission of an agency agreement.
B	The CFR / CIF price quoted will be deemed to be inclusive of Indian Agency commission. Agency commission as disclosed by the bidder in his quoted CFR / CIF price will be paid in Indian Rupees on receipt & acceptance of Materials or it's installation at destination, as the case may be. The lower of the 'TT buying rate prevailing on the date of technical bid opening or price bid opening shall be considered for computation of Agency commission.
C	In a tender either the Indian Agent on behalf of Principal / OEM or the Principal / OEM itself can bid, but both cannot bid simultaneously for same item / product in the same Tender. In case bids are received from both the Principal / OEM and the agent, bid received from the agent will be ignored.
D	If an agent submits Bid on behalf of the Principal / OEM, the same agent shall not submit bid on behalf of another Principal / OEM in the Tender, for the same Item / Product.
11	**Documentation:**
A	**Indigenous Purchase**
	Seller shall arrange to send to the consignee, Original Tax invoice (Buyer's copy and duplicate for Transporter), Commercial invoice in duplicate, consignee copy of LR & 2 sets each of Packing list, Test certificate, Guarantee / Warranty certificate, O & M manuals (where applicable), immediately on despatch of the goods. The distribution of such documents will be specified in the Purchase order.
B	**Foreign Purchase — Imports**
	A. Vendor to share immediately Bill of lading with Import Invoice and packing list of material at mssea@bhel.in and incorporate following detail in the bill of lading: **a. Import & export Code (IEC) of importer;** **b. GST Identification No (GSTIN) of importer;** **c. Official email id of importer (to be used for correspondence by shipping lines and Customs) – mssea@bhel.in to be included.** B. Seller shall send **1** set of following documents, in English, within 7 days of B/L date / 1 day of AWB date by courier to the Purchaser. 1. Express / Original 'Clean on board' Bill of Lading / AWB. 2. One set of Commercial Invoice, Packing list indicating container-wise Gross weight, Net weight, CBM volume, No. of packages with Dimensions of each package.

	3. Original Certificate of Country of Origin issued by Chamber of Commerce. 4. One set of Original Test Certificates and O&M Manual where called for. 5. Fumigation / Phyto Sanitary Certificate wherever cargo is packed in wooden packing or packing of plant origin material is used. 6. Supplier should additionally forward 2 sets of original documents mentioned at point 1 to 5 along with original bill to Lading through any international courier service / registered airmail or AWB by captain's mail within three days of obtaining the same directly to the following: (i) AGM (M.S) Regional Operations Division BHEL 14th Floor Centre-1 World Trade Centre, Cuffe Parade Colaba, Mumbai 400 005 INDIA E-mail: mssea@bhel.in (ii) SDGM (FIN) Administrative Bldg. BHEL, FSIP, IA Jagdishpur Amethi, 227817, UP, India E-mail : shashi.kumari@bhel.in And **confirm forwarding details** to DGM (MM), BHEL, FSIP, IA Jagdishpur 227817, Amethi , UP, India at nasaifi@bhel.in /pkyadav@bhel.in/vjain@bhel.in. 7. In case the Seller decides to negotiate all 3 originals of B/L / AWB along with all original documents through negotiating Bank, non-negotiable documents (NNDs) consisting of copy of B/L / AWB & documents mentioned at Sl. no. 11- B2 to B5 will be sent by e-mail to the Purchaser at his e-mail address given in the PO with one copy to be mailed at ***nasaifi@bhel.in*** & ***vjain@bhel.in*** (for sea shipment). Other documents, as required, will be separately indicated in the Purchase Order. Additional expenditure, if any, incurred by the Purchaser by way of detention / demurrage, resulting out of delay attributable to the Seller in providing Negotiable documents, will be recovered from the Seller. In case any discrepancy is raised by bankers / BHEL with respect to documents submitted, vendor to facilitate clearance of goods through Delivery Order.
C	**General**
	1. For Hazardous chemicals, the materials safety data sheet (MSDS) is to be submitted. 2. All certificates as called must be sent. BHEL may test any goods supplied and their decision is final irrespective of supplier's certificates. If test certificate and guarantee certificate are not received along with the document and stipulated in these specifications, BHEL reserves the right to get the material tested and recover the expenses from the supplier without awaiting supplier's confirmation
12	**Pricing Terms:**
	Prices once quoted shall remain firm within the validity or any extension thereof for placement of order, till complete execution of the order, without any escalation / increase for any reason, whatsoever, unless specifically provided for in the Enquiry & PO. In case of foreign vendors, the quoted price shall be taken as inclusive of Third Party Inspection and testing charges as called for in the NIT.
13	**Price Validity :**
	Unless stated otherwise in the enquiry, offer shall be valid for a period of **90 days** from the date of Techno- commercial (Part-I) bid opening date.
14	**Taxes & Duties - Indigenous Purchase:**
A	Vendor to ensure timely remittance of SGST, CGST, IGST as applicable in time as per law.
B	Vendor to ensure compliance to filing of monthly GST sales return including BHELs supplies by 10th of next calendar month in the online GST portal wherever applicable.
C	Vendors to declare filing of timely returns and GST remittance / likely remittance / ITC adjustment along with invoice.
D	Vendor to submit invoices compliant with GST invoice Rules
E	Vendors to comply with all statutory provisions as may be applicable at the time of despatch / sale. Any additional financial liability to BHEL on account of non-compliance by vendors shall be borne by them and shall be adjusted / recovered from the vendors. BHEL reserves the right to review the existing offers / contracts for any revision in terms, which may arise due to change in any statutory provisions to ensure that the benefit accrues to BHEL.

F	Vendor to ensure TAX INVOICE submission along with consignment
G	In respect of cases where the liability to discharge GST is on BHEL under reverse charge mechanism, vendors have to ensure timely submission of invoices and delivery of material / services to BHEL, so that there is no mismatch on both activities. In case there is any additional financial liability on BHEL on account of default on the part of the vendor on submission or delivery of material / services the same shall be passed on to them. In respect of free issue material by BHEL, vendors have to return the processed material within the time line as per the provisions of GST. In case of any additional tax liability on BHEL on account of non-compliance by the vendor, the additional financial implications on BHEL shall be passed on to the vendor.
H	Vendors to provide the applicable HSN / SAC codes as called for in the enquiry
15	**Taxes & Duties - Foreign Purchase — Imports**
	The offered prices shall be inclusive of all the Taxes and duties as applicable in the country of bidder / country of dispatch for the quoted CFR / CIF price.
16	**Payment Terms-**
A	**Indigenous:** 100% payment in 90 days of receipt (45 days for MSE including NSIC / Udyog Aadhar/UDYAM/EM-II/DIC along with valid CA certificate, registered suppliers as per relevant act in force), subject to acceptance of material at BHEL, on direct presentation of the documents. In case of despatch of material to site directly, site certification for receipt of materials is required unless otherwise provided for in the PO.
B	**Foreign:** 100% direct Payment payable on 90th day of B/L / AWB.
	Any deviation from the above payment terms, if accepted (by BHEL), shall be loaded as per below point: (i) 'Base rate of SBI (as applicable on the date of bid opening; Techno-commercial bid opening in case of two part bids) + 6%' shall be considered for loading for the period of relaxation sought by bidders. (ii) Wherever LC payment terms are not offered in NIT and the same is insisted by bidder(s), all LC related bank charges to be incurred by BHEL shall also be loaded. (iii) In case of deviation w.r.t. LC payment terms offered in NIT, the loading shall be done for all LC related bank charges to be incurred by BHEL.
C	Foreign vendors to submit declaration of **Permanent Establishment and Business Connection (PEBC**) for remittances purpose. Declaration to be submitted in formats in either Annexure A or B whichever is applicable as per their transaction entered into with BHEL. In the absence of certificates from the vendor, withholding tax at applicable rates along with surcharge and cess will be recovered at the time of remittance to the vendor.
D	Foreign vendors to submit **Tax Residency Certificate (TRC) & Form 10 F** (for obtaining DTAA benefits) as per Annexure C in respect of services. The TRC (tax residency certificate) is to be issued by the authorities of the government of vendor's country. If the informative part of the format (other than residency) is not furnished by the authorities the same may be furnished by the vendor as a declaration.
17	**Inspection of Goods**
A	The Seller shall give adequate notice, of 1 week or as mutually agreed period, in writing to the Purchaser (in case Customer inspection is involved) or BHEL appointed TPIA about the date and place at which the goods will be ready for inspection/ testing, as provided for in the contract.
B	Purchaser or his authorized representative shall be entitled to carry out inspection of material and Workmanship / Surveillance Audit at Seller's premises or at his sub-contractor's premises at all reasonable times during execution of contract; Such inspection, examination and testing, if made, shall not absolve the Seller from his obligations under the contract. Wherever required, BHEL may carry out testing at BHEL's testing Lab and in case of any rejection during such testing, replacement / rectification, as required, will have to be done by Supplier. If BHEL carries out any rectification of such rejected material, such cost will be recovered from Supplier's Bills. In case of Customer inspection as Supplier's Works, inspection clearance to be obtained from Customer and submitted to BHEL.

C	BHEL's representative from unit or Corporate Quality (CQ) is authorised to carry out audits along with TPIA at vendor's works before clearing the items for despatch.
D	All costs related to inspections and re-inspections shall be borne by the Seller. In case of inspection by BHEL and / or BHEL's customer, the cost of to & fro passage and Boarding & Lodging shall be borne by the Purchaser / Customer, unless otherwise specifically agreed. In case of foreign vendors, the cost of third party inspection, where called for, shall be deemed to be included in the quoted price. Seller shall be responsible to provide assistance such as labour, materials, electricity, fuels, stores, apparatus, instruments at his cost, as may be required and as may be reasonably demanded to carry out such tests effectively.
E	**REJECTION:** If any goods are rejected, BHEL shall be at liberty to take action as per following at the risk and cost of supplier: a) Allow the supplier, wherever mutually agreed, to rectify the rejected goods at BHEL's works within reasonable time as fixed by BHEL. or b) Allow the supplier to make free replacement within a specified period. Rejected goods can be lifted by the supplier there after. or c) In case payment has been done, allow supplier to refund equivalent value of rejected material by NEFT / RTGS or furnish Bank Guarantee for same amount before lifting the rejected goods. Fresh replacement shall be regulated as per terms and condition of the original Purchase Order. In case payment has not been done, allow the supplier, wherever mutually agreed, to rectify the rejected goods at supplier's works within reasonable time as fixed by BHEL. or d) Take alternate procurement action from elsewhere and recover the difference in total cost to BHEL including services, if any, incurred by BHEL in this regard from the supplier. The supplier shall not be entitled to any gain on repurchase. or e) Terminate the contract either in part or in whole at the discretion of BHEL and recover the loss, if any, from the supplier. or f) Any goods rejected by BHEL must be removed by the supplier after making payment through NEFT / RTGS within 45 days from the date of intimation of rejection or 30 days after receipt of the intimation of rejection whichever is earlier. If vendor fails to lift or allow despatch of rejected material at his cost within 90 days from the intimation of rejection, his claim on rejected material shall cease.
	REJECTION: **The supplier shall arrange replacement/repair within one month from the date of rejection intimation upon failure on supplier's part to comply. BHEL will take whatever appropriate action they may think fit in addition to repair/return of rejected material at the cost and risk of the supplier.**
18	**Guarantee / Warranty and corresponding Repairs / Replacement of Goods**
	Manufacturer's works test / infection certificates shall be furnished along with the guarantee that material conforms strictly to the specification for general & special conditions as laid down in the purchase order. Goods shall comply with the specifications for material, workmanship and performance. The warranty shall be for a period of 12 months from the date of receipt. If the delivery is found non-compliant during the warranty period, leading to rejection, the Seller shall arrange free replacement / repair of goods, within one month from the date of intimation or any mutually agreed period. The rejected goods shall be taken away by the Seller at his cost and replaced on Delivered Duty Paid (DDP) (FOR - BHEL Stores / designated destination basis) within such period. In the event of the Seller's failure to comply, Purchaser may take action as appropriate, including Repair / Replenish rejected goods & disposal of rejections, at the risk & cost of the Seller. In case the defects attributable to Seller are detected during processing of the goods at purchasers/ his subcontractor's works, the Seller shall be responsible for free replacement / repair of the goods as required by the purchaser.
19	**Evaluation and Loading Criteria:**

	Evaluation of the tender shall be on the basis of delivered cost, i.e. 'total cost to BHEL' w.r.t the technical scope and commercial conditions finalized after techno-commercial clarifications (after considering, inter alia, Customs Duty and GST / Other taxes as applicable). Exchange rate (TT selling rate of State Bank of India) applicable on the date of Part-I bid opening shall be considered for evaluation of foreign bids. If the relevant day happens to be a bank holiday in India, then the FOREX rate as on the previous bank working day shall be taken for evaluation. Foreign suppliers shall ensure that the benefits as applicable under Comprehensive Economic Partnership Agreement (CEPA) with Government of India are disclosed in the bid & relevant documents such as Certificate of Country of Origin, issued by the appropriate authority in the country of Export is provided by the vendor along with dispatch documents. Bids shall be evaluated with such applicable benefits. In the event of Seller failing to provide appropriate documents for Purchaser to avail disclosed concessional duty benefits in India, financial loss, so incurred, will be to the Seller's account.
	The evaluation currency for this tender shall be INR.
20	**Variation of orders**
	No variation to the Purchase order is permitted unless authorised in writing and signed by or on behalf of purchase executive, BHEL Jagdishpur.
21	**Sub-contract**
	BHEL's order or part there off, if further to be subcontracted in exceptional circumstances the details of subcontracting and to whom to be subcontracted shall be furnished to BHEL and written permission shall be obtained from BHEL. However, it shall not absolve the supplier of the responsibility of fulfilling BHEL order requirements.
22	**Recovery / deductions of amount from supplier**
	A) Any amount on account of recovery from consignor / supplier under any condition shall be liable to be adjusted against any amount payable to the consignor / supplier against bills. B) For any deficiency in supplies where deduction is involved, an amount as decided by BHEL, shall be deducted from supplier's bills.
23	**Safety clause for Purchase Orders**
	The vendors shall maintain and ensure sufficient safety measures as required for inspections and test like HV test. Pneumatic test, Hydraulic test Spring test, Bend test, Material handling and safe working environment etc. to enable Inspection Agency for performing inspection. The vendor shall ensure that all the safety precautions specified in factories Act 1948 chapter-IV Section-21 to 41 are complied with respect to equipment's to be inspected. If any test equipment is found not complying with proper safety requirement, then the inspection agency may withhold inspection, till such time the desired safety requirements are met.
24	**Non-Disclosure Agreement**
	All Drawing and technical documents relating to the product or it's manufacture submitted by one party to the other, prior or subsequent to the formation of contract, shall remain property of the submitting party. Drawing, technical documents or other technical information received by one party, shall not without the consent of the other party, be used for any other purpose than that, for which they were provided. Such technical information shall not without the consent of the submitting party, otherwise be used or copied, reproduced, transmitted or communicated to a third party. Patterns supplied by BHEL will remain BHEL's property which shall be returned by the bidder on demand to BHEL. Bidder shall in no way share or use such intellectual property of BHEL to promote his own business with others. ***BHEL reserves the right to claim damages from the bidder, or take appropriate penal action as deemed fit against the bidder, for anv infringement of the provisions contained herein.***
	DRAWINGS, PATTERNS & TOOLS: All drawings, patterns & tools supplied by BHEL or made at BHEL's expense are BHEL's property. These cannot be used or referred to any other party and must only be used in the execution of BHEL's orders. These should be preserved at the supplier's cost for a period of not less than 5 years. Patterns & tools should be returned to BHEL within 90 days of issue of the same.
25	**Settlement of Disputes & Arbitration**
A	All questions / interpretations regarding subject matter of the Contract shall be decided by the Purchaser on the request of the Seller and the decision of the Purchaser shall be final.
B	In case of dispute, steps shall be taken by the parties to the contract to settle the same through negotiations.

C	In case, dispute is not settled in negotiations, it shall be referred to Conciliator appointed by the competent authority of the Purchaser.
D	Except as provided elsewhere in this Contract, in case amicable settlement is not reached between the Parties, in respect of any dispute or difference; arising out of the formation, breach, termination, validity or execution of the Contract; or, the respective rights and liabilities of the Parties; or in relation to interpretation of any provision of the Contract; or, in any manner touching upon the Contract, then, either Party may, by a notice in writing to the other party refer such dispute or difference to the sole arbitration of an arbitrator appointed by Head of the BHEL Unit/Region/Division issuing the Contract. The Arbitrator shall pass a reasoned award and the award of the Arbitrator shall be final and binding upon the Parties. Subject as aforesaid, the provisions of Arbitration and Conciliation Act 1996 (India) or Statutory modifications or re-enactments thereof and the rules made thereunder and for the time being in force shall apply to the arbitration proceedings under this clause. The seat of arbitration shall be Lucknow. The cost of arbitration shall be borne as per award of the Arbitrator. Subject to the arbitration in terms of Clause above, the Courts at Lucknow shall have exclusive jurisdiction over any matter arising out of or in connection with this Contract. Notwithstanding the existence or any dispute or differences and / or reference for the arbitration, the Contractor shall proceed with and continue without hindrance the performance of its obligations under this Contract with due diligence and expedition in a professional manner except where the Contract has been terminated by either Party in terms of this Contract.
	In case of Contract with Public Sector Enterprise (PSE) or Government Department, the following shall be applicable: In the event of any dispute or difference relating to the interpretation and application of the provisions of the Contract, such dispute or difference shall be referred by either Party for arbitration to the sole arbitrator in the Department of Public Enterprises to be nominated by the Secretary to the Government of India in-charge of the Department of Public Enterprises. The Arbitration and Conciliation Act, 1996 shall not be applicable to arbitration under this clause. The award of the arbitrator shall be binding upon the Parties to the dispute, provided, however, any Party aggrieved by such award may make further reference for setting aside or revision of the award to the Law Secretary, Department of Legal Affairs, Ministry of Law and Justice, Government of India. Upon such reference the dispute shall be decided by the Law Secretary or the Special Secretary or Additional Secretary when so authorized by Law Secretary, whose decision shall bind the Parties hereto finally and conclusively. The Parties to the dispute will share equally the cost of arbitration as intimated by the Arbitrator.
E	The Seller shall continue to perform the contract, pending settlement of dispute(s).
26	**Applicable Laws and Jurisdiction of Courts**
	Indian laws both substantive and procedural, for the time being in force, including modifications thereto, shall govern the Contract including Arbitration proceedings. The competent Courts at Lucknow in the State of Uttar Pradesh, India shall have sole jurisdiction.
27	**RIGHT OF REJECTION /NON- PLACEMENT OF PO:** BHEL reserves the right to accept the offers in part or in full, or cancel the Tender enquiry without assigning any reason.
28	**Performance Bank Guarantee (PBG) / Security Deposit (SD)-(If applicable)**
A	Wherever PBG/SD (covering equipment / system / work performance guarantee) **is** called for in the Notice Inviting Tender (NIT) deviation shall not be accepted.
B	Bank Guarantee wherever called for, shall be in the BHEL prescribed format. In case the order is to be placed in foreign currency, the BG must also be in Foreign currency, so specified by the Purchaser.
C	Wherever Security Deposit (covering contract performance) is called for in the NIT, deviation shall not be accepted.
D	Composite 'Contract Performance Bank Guarantee' of matching value / validity, where both Security Deposit and Performance Bank Guarantee are required, shall not be construed as deviation.
E	Wherever the contract is for supply of Goods processed on labour basis from BHEL supplied materials, the materials shall be issued against a suitable Bank guarantee as specified in the Enquiry.
29	**Benefits earmarked for Purchase from Micro & Small Enterprises (MSEs) — Indigenous Purchase**
A	MSE bidders shall submit along with bid relevant documents w.r.t. their respective MSE status as per extant norms. Date to be reckoned for determining the deemed validity will be the last date of Technical bid submission. Non- submission of such document will lead to consideration of their bid, at par with other bidders and MSE status of such bidders shall be shifted to Non- MSE supplier till the supplier submit these documents.

B	In tender, participating MSEs quoting price within price band of L1+15% shall also be allowed to supply a portion of requirement by bringing down their price to L1 price in a situation where L1 price is from someone other than a MSE and such MSE shall be allowed to supply up to 25% of total tendered value. In case of more than one such MSE, the supply shall be shared proportionately. A quantum of 6.25% out of 25% quantity, so earmarked, will be reserved for MSE's owned by SC / ST entrepreneurs who submit their bid with relevant documents provided that in event of failure of such MSE(s) to participate in tender process or meet tender requirements and L1 price, 6.25% sub-target for procurement earmarked for MSE(s) owned by SC or ST entrepreneurs shall be met from other MSE(s). **Special provision for Micro and small enterprises owned by Women in following cases**: - 3% reservation for women owned MSEs under following conditions i. In case of Proprietary MSE, proprietor is woman. ii. In case of partnership MSE, the woman partner is holding at least 51% share in the unit. iii. In case private limited companies, at least 51% share is held by woman promoters. **In case of indivisible tender the full quantity shall be awarded to L1.**
C	If an enterprise falling under MSE category as defined in the MSMED Act 2006, graduates to a higher category from it's original category or beyond the purview of the Act, it shall continue to avail all non-tax benefits of it's original category notified by the Ministry of Micro, Small and Medium Enterprise for a period of three years from the date of such graduation to the higher category.
D	MSE suppliers can avail the intended benefits only if they submit along with the offer, attested copies of either EM II certificate having deemed validity (five years from the date of issue of acknowledgement in EM II) or valid NSIC certificate or EM II certificate along with attested copy of a CA certificate (As per BHEL Format, where deemed validity of EM II certificate of five years has expired) applicable for the relevant financial year (latest audited). Date to be reckoned for determining the deemed validity will be the date of bid opening (Part 1 in case of two part bid). Non submission of such documents will lead to consideration of their bid at par with other bidders. No benefits shall be applicable for this enquiry if any deficiency in the above required documents are not submitted before price bid opening. If the tender is to be submitted through e-procurement portal, then the above required documents are to be uploaded on the portal. Documents should be notarized or attested by a Gazetted officer
30	**Integrity Pact (IP) — Independent external monitors (IEM)** For tenders in which integrity pact is applicable, following points stand valid :
A	IP is a tool to ensure that activities and transactions between the company and its bidders / contractors are handled in a fair, transparent and corruption free manner. A panel of Independent External Monitors (IEMs) have been appointed to oversee implementation of IP in BHEL. The IP as enclosed with the tender is to be submitted (duly signed by authorized signatory who signs in the offer) along with techno commercial bid. Only those bidders who have entered into such an IP with BHEL would be competent to participate in the bidding. In other words, entering into this pact would be a preliminary qualification. Name : ---------- Address : ---------- mail : ---------- } As indicated in NIT / enquiry :201__
B	Please refer section 8 of the IP for roles and responsibilities of IEMs. In case of any complaint arising out of tendering process, the matter may be referred to the IEM mentioned in the tender. **NOTE:** No routine correspondence shall be addressed to the IEM (phone / post / e-mail) regarding the clarifications, time extensions or any other administrative queries, etc. on the tender issued. All such clarifications / issues shall be addressed directly to the tender issuing (procurement) department.
31	**Fraud Prevention Policy** : The Bidder along with its associate / collaborators / sub-contractors / sub-vendors / consultants / service providers shall strictly adhere to BHEL Fraud Prevention Policy displayed on BHEL website www.bhel.com and shall immediately bring to the notice of BHEL Management about any fraud or suspected fraud as soon as it comes to their notice.
32	GSTN nos. of vendors as well as GSTN No of BHEL must be mentioned on the invoices/bills of the materials. Please note that correct HSN code as well as rate of GST be mentioned in the invoice/bills.
33	BHEL FSIP GSTIN Reg. No: 09AAACB4146P2ZC State Code: 09 (Uttar Pradesh)

34	(a) **Right of Acceptance**: BHARAT HEAVY ELECTRICALS LIMITED JAGDISHPUR reserves the right to reject any or all the bids/quotations without assigning any reason thereof. BHEL also reserves the right to increase or decrease the tendered quantities. Bidders should be prepared to accept order for reduced quantity without any extra charges. (b) **Right of Rejection /Non- Placement of PO**: BHEL reserves the right to accept the offers in part or in full or cancel the Tender enquiry/PO without assigning any reason. (c) Wherever BHEL business interest will contradict with any supplier, offer of that supplier may be rejected.
35	**Integrity Commitment:** The offers of the bidders who are under suspension as also the offers of the bidders, who engage the services of the banned firms, shall be rejected. The list of banned firms is available on BHEL website www.bhel.com. Integrity commitment, performance of the contract and punitive action thereof :
A	**Commitment by BHEL :** BHEL commits to take all measures necessary to prevent corruption in connection with the tender process and execution of the contract. BHEL will during the tender process treat all bidder's in a transparent and fair manner, and with equity.
B	**Commitment by bidder / Supplier / Contractor :** - The bidder / supplier / contractor commit to take all measures to prevent corruption and will not directly or indirectly influence any decision or benefit which he is not legally entitled to nor will act or omit in any manner which tantamount to an offence punishable under any provision of the Indian Penal code, 1860 or any other law in force in India. - The bidder / supplier / contractor will, when presenting his bid, disclose any and all payments he has made, and is committed to or intends to make to agents, brokers or any other intermediaries in connection with the award of the contract and shall adhere to relevant guidelines issued from time to time by govt. of India / BHEL - The bidder / supplier / contractor will perform / execute the contract as per the contract terms & conditions and will not default without any reasonable cause, which causes loss of business / money / reputation to BHEL.
C	If any bidder / supplier / contractor during pre-tendering / tendering / post tendering / award / execution / post execution stage indulges in mal-practices, cheating, bribery, fraud or / and other misconduct or formation of cartel so as to influence the bidding process or influence the price or acts or omits in any manner which tantamount to an offence punishable under any provision of the Indian Penal Code, 1860 or any other law in force in India, then action may be taken against such bidder / supplier / contractor as per the extant guidelines of the company available on www.bhel.com and / or under applicable legal provisions.
d	Defaulter suppliers shall be treated as per Guidelines for Suspension of the Business Dealing with suppliers/contractors.
36	**Deviation**: Any of the terms and conditions not acceptable to supplier, shall be explicitly mentioned in the tender. Otherwise, it will be treated as that all those terms and conditions as mentioned in the tender are acceptable in Toto.
37	**Benefits earmarked to suppliers for Purchase under ' MAKE IN INDIA'**
	Compliance to **MAKE IN INDIA** circular issued by GOI: "For this procurement, the local content to categorize a supplier as a Class I local supplier / Class II local supplier / Non-Local Supplier and purchase preference to Class I local supplier, is as defined in Public Procurement (Preference to Make in India), Order 2017 dated 04.06.2020 issued by DPIIT. In case of subsequent orders issued by the nodal ministry, changing the definition of local content for items of the NIT, the same shall be applicable even if issued after issue of this NIT, but before opening of Part II bids against this NIT" (Format Attached).
	As part of minimizing import content, Government of India, vide order no P-45021/2/2017-B.E.-II dated 15.06.2017, under the subject – Public Procurement (Preference to Make in India) -- has set the initiatives to encourage and promote indigenously manufactured goods within India and services provided by sources within India. . In line with this, bidders who manufacture the goods and provide services within India (otherwise referred as local suppliers) are given purchase preference and are entitled to benefits in the tender
A	Definitions
(i)	Local content means the amount of value added in India which shall, unless otherwise prescribed by the Nodal Ministry, be the total value of item procured (excluding net domestic indirect taxes) minus the value of imported content in the item (including all customs duties) as a proportion of the total value , in percent . Presently, the minimum local content required is

	50%. The nodal ministry may prescribe a higher or lower percentage in respect of any particular item and may also prescribe the manner of calculation of local content.
(ii)	Local supplier means a supplier or service provider whose product or service offered for procurement meets the minimum local content as prescribed
(iii)	Margin of Purchase Preference means the maximum extent to which the price quoted by a local supplier may be above the L1 for the purpose of purchase preference. Presently the margin of Purchase preference is 20%.
B	Conditions under which preference is given
(i)	In procurement of goods in respect of which the Nodal ministry has communicated that there is sufficient local capacity and local competition, and where the estimated value of procurement is Rs 50 lakhs or less, only local suppliers shall be eligible. If the estimated value of procurement of such goods is more that Rs 50 lakhs, provisions of 37(B) (ii) and 37(B)(iii) shall apply.
(ii)	If the procurement of goods are not covered by 37(B)(i) and are divisible in nature, the following procedure shall be followed :
a	If L1 is a local supplier, the order for full quantity shall be awarded to local supplier
b	If L1 bid is not from a local supplier, 50% of the order quantity shall be awarded to L1. Thereafter, the lowest bidder among the local suppliers, shall be invited to match the L1 price for the remaining 50% quantity, subject to the local supplier's quoted price falling within the margin of purchase preference, and the order for that quantity shall be awarded to such local supplier subject to matching the L1 price. In case such lowest eligible local supplier fails to match the L1 price or accepts less than offered quantity, the next higher local supplier within the margin of purchase preference shall be invited to match the L1 price for remaining quantity and so on, and the order shall be awarded accordingly. In case some quantity is still left uncovered on local suppliers, then such balance quantity may also be ordered on the L1 bidder.
iii	If the procurement of goods are not covered by 37(B)(ii) and are not divisible in nature, and in procurement of services where the bid is evaluated on the price alone, the following procedure shall be followed :
a	If L1 is a local supplier, the order shall be awarded to local supplier
b	If L1 bid is not from a local supplier, then the lowest bidder among the local suppliers, will be invited to match the L1 price, subject to the local supplier's quoted price falling within the margin of purchase preference, and the order shall be awarded to such local supplier subject to matching the L1 price. In case such lowest eligible local supplier fails to match the L1 price, the local supplier with the next higher bid within the margin of purchase preference shall be invited to match the L1 price and so on, and the order shall be awarded accordingly. In case none of the local suppliers within the margin of preference match the L1 price, then the order may be awarded to the L1 bidder.
C	Exemption of small purchases
	Notwithstanding anything contained at clause 37B above**, procurements** where the estimated value of procurement is less than Rs 5 lakhs are **exempt and** purchase preference shall not be accorded in such cases.
D	Verification of local content
(i)	The local supplier, at the time of tender, bidding or solicitation, shall be required to provide self-certification that the item offered meets the minimum local content and shall give details of the location(s) at which the local value addition is made.
(ii)	In cases of procurement for a value in excess of Rs 10 crores, the local supplier shall be required to provide a certificate from the statutory auditor or cost auditor of the company (in case of companies) or from a practicing cost accountant or practicing chartered accountant (in respect of suppliers other than companies) giving the percentage of local content.

(iii)	False declarations shall be in breach of code of integrity and shall invite action as per guidelines for Suspension of Business dealings with Suppliers
E	In case of any disputes / clarifications, the extant guidelines of Government of India shall prevail.
38	**Model Clauses for Tenders**
I	Any bidder from a country which shares a land border with India will be eligible to bid in this tender only if the bidder is registered with the Competent Authority.
II	"Bidder" (including the term 'tenderer', 'consultant' or 'service provider' in certain contexts) means any person or firm or company, including any member of a consortium or joint venture (that is an association of several persons, or firms or companies), every artificial juridical person not falling in any of the descriptions of bidders stated hereinbefore, including any agency branch or office controlled by such person, participating in a procurement process.
III	"Bidder from a country which shares a land border with India" for the purpose of this Order means: -
a	An entity incorporated, established or registered in such a country: or
b	A subsidiary of an entity incorporated, established or registered in such a country; or
c	An entity substantially controlled through entities incorporated, established or registered in such a country; or
d	An entity whose beneficial owner is situated in such a country; or
e	An Indian (or other) agent of such an entity; or
f	A natural person who is a citizen of such a country; or
g	A consortium or joint venture where any member of the consortium or joint venture falls under any of the above
IV	The beneficial owner for the purpose of (iii) above will be as under:
1	In case of a company or limited liability Partnership, the beneficial owner is the natural person (s) who, whether acting alone or together, or through one or more juridical person, has a controlling ownership interest or who exercises control through other means. Explanation –
A	"Controlling ownership interest" means ownership of or entitlement to more than twenty-five per cent. Of shares or capital or profits of the company
B	"Control" shall include the right to appoint majority of the directors or to control the management or policy decisions including by virtue of their shareholding or management rights or shareholder's agreements of voting agreements;
2	In case of a partnership firm, the beneficial owner is the natural person (s) who, whether acting alone or together, or through one or more juridical of capital or profits of the partnership;
3	In case of an unincorporated association or body of individuals, the beneficial owner is the natural person (s), who, whether acting alone or together, or through one or more juridical person, has ownership of or entitlement to more than fifteen percent of the property of capital of profits of such association or body of individuals;
4	Where no natural person is identified under (1) or (2) or (3) above, the beneficial owner is the relevant natural person who holds the position of senior managing official;
5	In case of trust, the identification of beneficial owner (s) shall include identification of the author of the trust, the trustee, the beneficiaries with fifteen percent or more interest in the trust and any other natural person exercising ultimate effective control over the trust through a chain of control or ownership.
V	An agent is a person employed to do any act for another, or to represent another in dealings with third person.
39	**Conciliation**
	BHEL and bidder agree that if at any time (whether before, during or after the arbitral or judicial proceedings), any disputes (which term shall mean and include any dispute, difference, question or disagreement arising in connection with construction, meaning, operation, effect, interpretation or breach of the terms & conditions of order, which the parties are unable to settle mutually), arise inter-se the parties, the same may, be refereed by either party to Conciliation to be

	conducted through Independent Experts Committee to be appointed by competent authority of BHEL from the BHEL panel of Conciliators Notes: 1. No serving or a retired employee of BHEL/Administrative Ministry of BHEL shall be included in the BHEL Panel of Conciliators. 2. Any other person(s) can be appointed as Conciliator(s) who is/are mutually agreeable to both the parties from outside the BHEL Panel of Conciliators. The proceedings of Conciliation shall broadly be governed by Part-III of the Arbitration and Conciliation Act 1996 or any statutory modification thereof. The details of Conciliations shall be governed by the BHEL Conciliation scheme 2018.
40	**Clause for Suspected Cartel Formation**
	The Bidder declares that they will not enter into any illegal or undisclosed agreement or understanding, whether formal or informal with other Bidder(s). This applies in particular to prices, specifications, certifications, subsidiary contracts, submission or non-submission of bids or any other actions to restrict competitiveness or to introduce cartelization in the bidding process. In case, the Bidder is found having indulged in above activities, suitable action shall be taken by BHEL as per extant policies/ guidelines.
41	*Important Note: The bidder will, when presenting his bid, declare whether other family firms or sister concern affiliates/subsidiary firms are participating in same tender, so as to eliminate the possibility of cartel formation. Format for declaration is attached.*
42	**Submission of Performance Security for execution of the contract**
	Bidder agrees to submit performance security required for execution of the contract within the time period mentioned. In case of delay in submission of performance security, enhanced performance security which would include interest (SB/ rate + 6%) for the delayed period, shall be submitted by the bidder. Further, if performance security is not submitted till such time the first bill becomes due, the amount of performance security due shall be recovered as per terms defined in NIT I contract, from the bills along with due interest.
43	**If supplier does not mention against any terms of "General Terms and conditions", "Special/supplementary terms and conditions" and NIT terms. It shall be summarily concluded that respective terms are acceptable to supplier and no further clarification shall be asked.**

PREFERENCES/BENEFITS FOR MSEs:

Following preferences/benefits shall be given to MSEs in line with Public procurement policy for Micro and Small Enterprises (MSEs), 2012:

1. The tender documents shall be issued free of cost to MSEs.

2. MSEs are exempted from payment of Earnest Money Deposit (EMD).

3. In tender, Micro and Small Enterprises quoting within the price band of L1+15% shall be allowed to supply the requirement up to 25% of the tender quantity subject to condition that such Enterprises bring down their price to L1 price where L1 price is from other than a Micro and Small Enterprise. If L1 offer is from a Micro / Small Enterprise, this provision will not be applicable. In case more than one Micro and Small Enterprise is there within this span, the supply shall be shared proportionately to the tender quantity. For availing the advantage of L1+15%, bidder to provide the MSME certificate prior to price bid opening.

   Under above following provision is categorised as below:

   - **Special provision for Micro and small enterprises owned by SC or ST**: -

   Sub target of 25% (i.e. 6.25% out of 25%) would be earmarked for procurement from Micro and Small Enterprises owned by the Scheduled Caste or Scheduled Tribe Entrepreneurs provided that in event of failure of such Micro and Small Enterprises to participate in the tender process or meet the tender requirements and the L1 price, the 6.25% sub-target for procurement ear-marked MSE owned by Scheduled Caste or Scheduled Tribe Entrepreneurs shall be met from other MSE Enterprises.

   - **Special provision for Micro and small enterprises owned by Women in following cases**: - 3% reservation for women owned MSEs under following conditions
     i. In case of Proprietary MSE, proprietor is woman.
     ii. In case of partnership MSE, the woman partner is holding at least 51% share in the unit.
     iii. In case private limited companies, at least 51% share is held by woman promoters.

MSE suppliers can avail the intended benefits only if they submit along with offer, attested copies of either EM-II certificate having deemed validity (Five years from date of issue of acknowledgement in EM-II) or valid NSIC certificate/ DIC certificate/ Udyog aadhar or EM-II certificate along with attested copy of a CA certificate (format enclosed as per annexure-I where deemed validity of EM-II certificate of 5 years has expired) applicable for the relevant financial year (latest audited). Date to be reckoned for determining the deemed validity will be the date of bid opening (part-I in case of two part bid). Non submission of such documents will lead to consideration of their bids at par with other bidders. MSE status of such suppliers shall be shifted to non MSE supplier till the supplier submits the documents. This provision for MSE will apply subject to the condition that the participating MSE meets the tender requirements.

ANNEXURE- I

Certificate by Chartered Accountant on Letter Head

This is to Certify that M/s. .....(Hereinafter referred to as 'company') having its registered office at .....is registered under MSMED Act 2006, (Entrepreneur Memorandum No (Part-II .....dated: ..... Category: ..... (Micro/Small) (Copy enclosed).

Further verified from the Books of Accounts that the investment of the company as on date ..... as per MSMED Act 2006 is as follows:

I. For Manufacturing Enterprises: Investment in plant and machinery (i.e. original cost excluding land and building and the items specified by the Ministry of Small Scale Industries vide its notification No.S.O.1722(E) dated October 5, 2006 :

Rs. .....Lacs

2. For Service Enterprises: Investment in equipment (original cost excluding land and building and furniture, fittings and other items not directly related to the service rendered or as may be notified under the MSMED Act, 2006:

Rs .....Lacs

(Strike off whichever is not applicable)

The above investment of Rs. ..... Lacs is within permissible limit of Rs. ----------Lacs for ..... Micro/Small (Strike off which is not applicable) Category under MSMED Act 2006.

Or

The company has been graduated from its original category (Micro/ Small) (Strike off which is not applicable) and the date of graduation of such enterprise from its original category is ----------(dd/mm/yyyy) which is within the period of 3 years from the date of graduation of such enterprise from its original category as notified vide S.O. No. 3322(E) dated 01.11.2013 published in the gazette notification dated 04.11.2013 by Ministry of MSME.

Date:

(Signature)

Name -

Membership number -

Seal of Chartered Accountant

DECLARATION BY VENDOR

We declare that the following family firms or sister concern affiliates/subsidiary firms are participating in the tender No ……

1. ……

2. …….

3. ……

……

I …….., hereby declare on behalf of M/s ……. and the family firms or sister concern affiliates/subsidiary firms listed above that we are not indulging in cartel formation for enquiry No ……..

(……)

For M/s ……

(Seal & Sign)

Self-Declaration on Class I/Class II/Non Local under Make in India

(Valid for tender value greater than or equal to 5 Lakhs and Less than or equal to 10 Crores)

I ……., hereby declare on behalf of M/s ……. that my firm is under Class I ( )/Class II ( ) /Non Local ( ) as per Make in India Government Preferences.

(……)

For M/s ……

(Seal & Sign)

Annexure IV

Monttly Capacity Declared by Supplier

Tender Enquiry No-TE-109 dated 26.05.2022

Sl No	Item	Qty (M3)	Monthly Capacity (in Nos)	Remarks
1	Wooden Packing Box (Ceralin)	16		

Signed and Seal by Supplier

Bharat Heavy Electricals Limited

FSIP, Jagdishpur Amethi

TECHNICAL SPECIFICATIONS AND CONDITIONS FOR ANNUAL RATE CONTRACT FOR SUPPLY OF WOODEN PACKING BOXES/CRATES

1. **SCOPE OF SUPPLY:**
   1.1 This is the annual rate contract for supply of wooden packing boxes and shall be valid for one year from date of annual rate contract (ARC). Actual drawing or dimensions of wooden boxes shall be given from user department to the supplier as per BHEL's requirement.
   1.2 The wooden packing boxes are to be supplied in ready-to-pack condition at FSIP, BHEL Jagdishpur (hereinafter called as BHEL).
   1.3 The estimated total volume of the supply of wooden boxes is only indicative & the actual volume may vary depending upon plant operation/ requirement. No minimum load is assured.
2. **TECHNICAL SPECIFICATIONS:**
   2.1 The wood used in making boxes should conforms to enclosed specification JP-TP-17 (latest revision).
   2.2 Wooden packing boxes are to be supplied as per drawing, dimensions and purchase specifications given by BHEL which may vary from job to job/ ceralin.
   2.3 A reference drawing no. 3 CSK-111 REV 04 for wooden box(for orifices) has been attached for tendering.
   2.4 In case of unsatisfactory performance of quality / delivery BHEL will have right to discontinue the contract in part or full.
   2.5 Entry of vehicle/ trolleys etc. loaded with boxes will be allowed between 9:00 AM to 3:00 PM on all working days. The unloading of boxes will be in the scope of supplier. The boxes should be unloaded and properly stacked at the designated places Specified by BHEL.
   2.6 Deduction from bills will also be made in case of quality deficiency of the packing boxes as recommended by authorized BHEL representative.

3. **BUSINESS/ WORK DISTRIBUTION:** The business is reserved for Micro and Small Enterprises (MSE). The whole business is proposed to be distributed among 2 (two) successful bidders L1 and L2 in proportion of 60:40. For ranking the vendors as L-1, L-2, the basis will be lowest tender value arrived on the basis of landed cost to BHEL. The load will be distributed among **02 (Two)** most competitive vendors in the ratio of **60:40** subjected to more than three technically suitable offers received. The eligible vendors will be asked to match negotiated L1 price. However the load sharing is subject to acceptance of counter offer that is calculated with reference to the negotiated L1 price and linked with the vendor performance and capacity. In case of more than one vendor having same ranking, the load share corresponding to the ranking and the next ones will be clubbed together and will be equally distributed among such vendors. In case, any eligible vendor does not accept the counter offer, opportunity will be given to the next ranking vendor.

- If No other vendor is accepting L-1 rate, **100%** share will be allocated to L1 vendor.

BHEL may change the distribution of work if the quality of work and/or delivery of any of the contractor are not satisfactory during execution of the contract.

4. **INSPECTION:** The inspection and acceptance of boxes will be done at BHEL by QC personnel at the time of receipt of boxes. Entries of loaded vehicle of crates will be allowed between 9:00 AM to 3:00 PM on all working days. However BHEL will not be responsible for unloading of crates due to any reason thereof. The Unloading of crates will be in the scope of Vendor. Boxes meeting the

BHEL's purchase specifications JP-TP-15/GEN & JP-TP-17 as well as the drawings shall be accepted and those not conforming to the above requirements shall be marked as rejected. These rejected boxes should be lifted back (for their free replacement) by the supplier within two working days failing which these boxes may be declared as scrap by BHEL, and supplier will not be able to claim against same at a later stage.

5. **GUARANTEE:** The packing boxes should be guaranteed for at least two months from date of supply against any manufacturing defect or poor wood quality. The supplier shall arrange free replacement against these defective boxes. The packing boxes should also be guaranteed for safe packing, handling & transportation up to the destination. The contractor will give self-inspection report & guarantee certificate to this effect along with each lot.
6. **DELIVERY:** A minimum of 15 days (but not more than 45 days) shall be given in writing through email for delivery of boxes. The scheduled delivery time of boxes will be indicated in the respective emails. The supplier has to supply the boxes within schedule delivery date as mentioned in email failing which LD shall be applicable as mentioned in this tender. Inspection of the boxes will be carried out on receipt of the boxes at BHEL.
7. The required quantity as indicated in respective requisition letters may be revised (increased/ decreased) or cancelled as per requirement with a notice period of five calendar days. The supplied shall not claim against this cancellations/ revision.
8. The supplier should mark/ paint their boxes with following details before supply. BHEL PO No., Supplier's name, Box no. or any other identification no.
9. Party will have to follow all the legal and statutory requirements of State and Central Government and other government bodies and their rules issued time to time. BHEL will not be responsible in any way if they are fined or penalized due to non-fulfilment of these requirements. BHEL will cancel the contract, if in case party is found as the violator of any government rules.
10. The wood if banned by any government authority at any point of time shall be not used for boxes in spite of its mention in drawing/specification provided by BHEL. The responsibility to ensure the compliance of government/ salutatory authority ruling in this regard lies with Vendor. BHEL will not be responsible in any way if the vendor is fined or penalized due to non-fulfilment of these requirements.

VISUAL ACCEPTANCE NORMS FOR WOODEN PACKING CRATES

PHYSICAL APPEARANCE

1.0 CRACKS

A. In two planks of one crate a seasonal crack of 25mm Max. will be allowed.

B. For eucalyptus crate a seasonal crack of 10 mm length Max. in two planks per crate will be allowed.

2.0 KNOTS

A. Rotten knots not allowed.

B. One knot in one plank. Max. 25 mm is allowed in two planks in one crates. (Not on the Ends & sides).

3.0 CLEARANCE

Max. clearance between of two halves 6 mm.

4.0 BUCKLING

Not allowed

5.0 PROPER NAILING

Sharp end of Nails shall not be visible from outside.

Prepared By	Approved By
Functional Chief (Engineering)	HOD (Engineering)

क्रेट बनाने हेतु इस्तेमाल की जाने वाली लकड़ियों की सूची

बी० एच० ई० एल० के पूर्वानुभवों के आधार पर निम्नलिखित लकड़ियाँ क्रेट बनाने हेतु उपयोग में लायी जा सकती हैं :-

अमरूद, अंजीर, आँवला, आम, अकेशिया, अकुहर, अशोक, अमलतास, अर्जुन, इमली, कयम, कैथा, कदम्ब, कनकोकन, कोरैया, गुलमोहर, चिलबिल, छेवहर, जामुन, नीम, बबूल (जंगली), बबूल (देशी), बेर, बेल, बबूल (शिव), बोतल ब्रश, शहतूत, सफेदा या यूकेलिप्टस (केवल अगस्त से मार्च तक), सागौन, शीशम, सिरसा, रीठा (कंजी), जंगल जलेबी |

नोट:-

कृपया क्रेट बनाने हेतु निम्न लकड़ियों का प्रयोग न किया जाय :-

गूलर, पीपल, बरगद, पाकड़, महुआ, कथुमर, सेमर, छूल, सहजन, पलाश, कंजूर |

Prepared By	Approved By
Functional Chief (Engineering)	D2Chauhan HOD (Engineering)

प्रथम कोण प्रक्षेपण/FIRST ANGLE PROJECTION

सभी विमाएं मिलीमीटर में हैं।/ALL DIMENSIONS ARE IN mm.

अभिकल्प संख्या/DRAWING NO. 3 CSK-111

COPYRIGHT AND CONFIDENTIAL
THE INFORMATION ON THIS DOCUMENT IS THE PROPERTY OF BHARAT HEAVY ELECTRICALS LIMITED. IT MUST NOT BE USED DIRECTLY OR INDIRECTLY IN ANY WAY DETERIMENTAL TO THE INTEREST OF THE COMPANY.

स्वत्वाधिकार एवं गोपनीय
इस प्रलेख में दी गई सूचना भारत हैवी इलेक्ट्रिकल्स लिमिटेड की सम्पत्ति है। इसका प्रत्यक्ष या अप्रत्यक्ष रूप में किसी भी तरह प्रयोग नहीं किया जाए जो कम्पनी के हित में हानिकर हो।

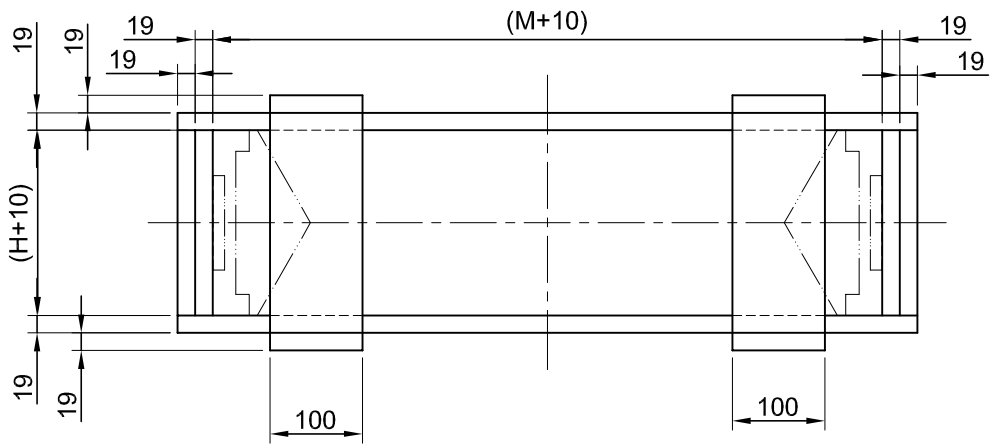

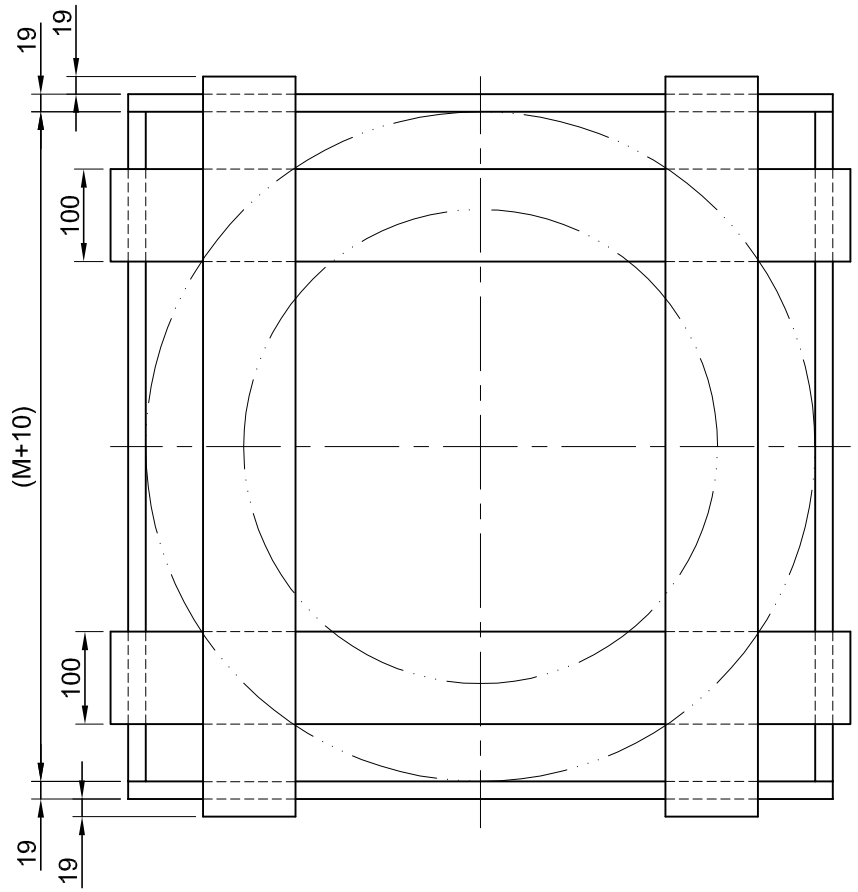

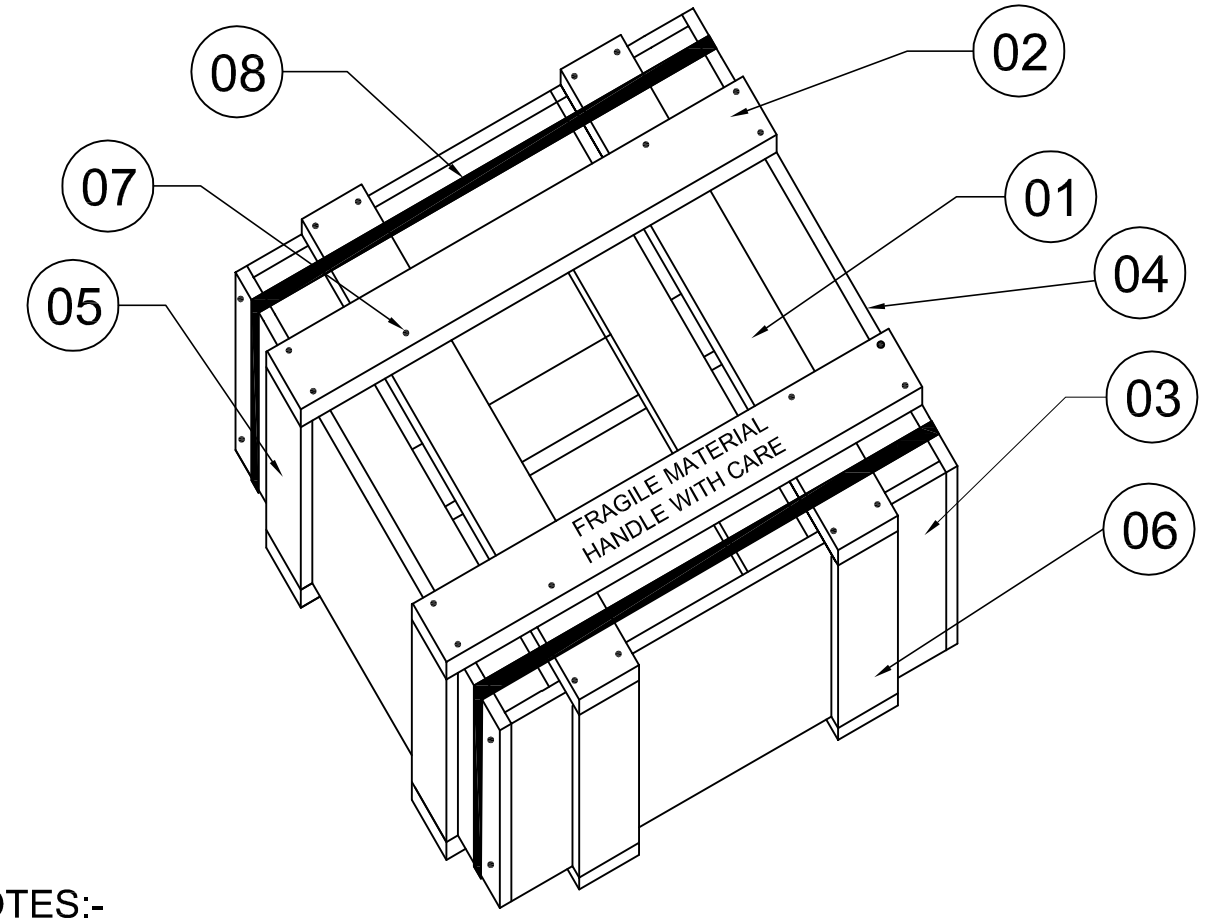

13	788	180	0.02825	0.99763
12	742	180	0.02689	0.94961
11	350	215	0.01681	0.59363
10	689	180	0.02532	0.89416
09	655	120	0.02028	0.71618
08	610	120	0.01915	0.67627
07	548	120	0.01760	0.62153
06	495	100	0.01517	0.53572
05	443	100	0.01394	0.49228
04	389	89	0.01215	0.42907
03	343	89	0.01111	0.39234
02	324	89	0.01068	0.37716
01	305	89	0.01024	0.36162
VAR. NO.	M	H	m^3	ft^3
			VOLUME OF WOOD REQUIRED	

NOTES:-

1. MATERIAL: WOOD AS PER GROUP I OR II OF IS: 6662 (LATEST REV.) AND AS PER DOCUMENT NO. JP-TP-17 (LATEST REV.)
2. ALL JOINT SHOULD BE SECURED BY ADEQUATE NUMBERS OF WIRE NAILS .
3. DIMENSIONS INDICATED REFER TO POST SHRINKAGE STAGE AND HENCE ARE MINIMUM ONES. DUE PROVISION FOR SHRINKAGE OF PLANKS SHOULD BE MADE BY THE VENDOR WHILE CUTTING THE SHOOKS .
4. NAILS SHOULD BE DRIVEN AT 15° SLANT INSTEAD OF DRIVING VERTICALLY . EXCESS PORTION OF NAILS SHOULD BE BENDED OFF.
5. BAND HOOP IRON 12 mm WIDTH 26 GAUGE BLUE FINISH SOFT VARIETY SHOULD BE FASTENED AT TWO PLACES.
6. MATERIAL TO BE ACCEPTED ACCORDING TO ACCEPTANCE NORM JP-TP-15/GEN

ITEM NO.	DESCRIPTION	DIMENSIONS	MATERIAL	QTY.
07	NAIL	Ø2.5 x 50 LONG	IS:723	48
06	BATTEN	19 x100 x (H+10)	SEE NOTE-1	04
05	BATTEN	19 x 100 x(H+48)	SEE NOTE-1	04
04	STAY PLANK	19 x (H+10) x (M+48)	SEE NOTE-1	02
03	STAY PLANK	19 x (H+10) x (M+10)	SEE NOTE-1	02
02	REINFORCEMENT PLANK	19 x 100 x (M+86)	SEE NOTE-1	04
01	STAY PLANK	19 x 100 x (M+86)	SEE NOTE-1	04

TOLERANCES:-

1. ON THICKNESS OF PLANKS: ±1.0 mm
2. ON LENGTH OF PLANKS: ±4.0 mm
3. ON WIDTH OF PLANKS : +4.0 mm -0

संशोधन REV.	दिनांक DATE	संशोधनकर्ता ALTERED BY / जांचकर्ता CHD	
04	16.03.15		

ADDED VAR. NO. 13

REF. NO. - 2520

संशोधन REV.	दिनांक DATE	संशोधनकर्ता ALTERED BY	Sd /=
03	11.02.13	जांचकर्ता CHD	Sd /=
02	03.03.12	संशोधनकर्ता ALTERED BY	Sd /=
		जांचकर्ता CHD	Sd /=
01	21.09.04	संशोधनकर्ता ALTERED BY	Sd /=
		जांचकर्ता CHD	Sd /=

REF. NO. - 2366

REF. NO. - 2314

REF. NO. - 1688

उत्पाद का प्रकार या ग्राहक/परियोजना का नाम
TYPE OF PRODUCT OR NAME OF CUSTOMER/PROJECT

भारत हेवी इलेक्ट्रिकल्स लिमिटेड, जगदीशपुर, सी०एस०एम० नगर
BHARAT HEAVY ELECTRICALS LIMITED, JAGDISHPUR, C.S.M. NAGAR

	नाम/NAME	हस्ताक्षर/SIGN	दिनांक/DATE
निर्माणकर्ता DRN.	C.S.JOSHI	Sd /=	31.08.04
जांचकर्ता CHD	S.M.S./ S.Y.	Sd /=	31.08.04
स्वीकृतीदाता APPD	T.L. PAI	Sd /=	31.08.04

वेरिएन्ट संख्या No. of Var.

विभाग DEPTT. अभियांत्रिकी ENGG.
कोड/CODE 400

पैमाना/SCALE N.T.S.

भार कि.ग्रा. WEIGHT (KG) --

असेम्बली अभिकल्प का संदर्भ REFER TO ASSLY. DRG.

नग क्रमांक ITEM NO.

नगों की संख्या NO. OF ITEMS

शीर्षक/TITLE
WOODEN BOX (FOR ORIFICES)

कार्ड कोड CARD CODE

अभिकल्प संख्या/DRAWING NO. 3 CSK-111

REV. 04

पृष्ठ संख्या/Sheets No. 01 पृष्ठों की संख्या/No. of Sheets 01

A3 साइज़/A3 SIZE

संदर्भित अभिकल्प संख्या REFERENCE DRG. NO.

हस्ताक्षर और दिनांक/SIGN & DATE

भागों सूची संख्या INVENTORY NO.

835451/2022/FSIP-R&D_UNIT

14/25