Bharat Heavy Electricals Ltd.,

(A Government of India undertaking)

Electronics Division

PB No.2606, Mysore Road, Bangalore-560026, India

E-Tender

The Quotations are invited under two part bid system for supply of MMS Super Structure for GSECL Raghanesda Phase-1 and GSECL Raghanesda Phase-2 Solar PV project.
Tender is procured through e-procurement route. Kindly refer website Kindly refer website https://eprocurebhel.co.in/nicgep/app/ for details.

RFQ NO and date	AKPBOS0022 dated 26.02.2021 (e-tender)
RFQ due date & time	10.03.2021 up to 14.00 hrs (IST)
Date, Time & Venue of Part-I Bid Opening	10.03.2021 up to 14.30 hrs (IST)
Date, Time & Venue of Price Bid opening	Will be intimated later for technically accepted vendors
Address for Commercial Communication & Contact Person in BHEL (MM dept)	Mr. Srinivas Anakapalli (09916999898)/ Mr. Vivek Kumar Yadav (09449039232), SC&PV MM Department, BHEL EDN Mysore Road Bengaluru 560026. INDIA Email: srinivasa.a@bhel.in , vivekyadav@bhel.in@bhel.in Telephone number: 09916999898
Address for Technical Communication & Contact Person in BHEL with CC to MM dept	Mr.Yaswanth Kumar (9642986518) Dy Manager SC&PV ENGINEERING Department, BHEL EDN Mysore Road Bengaluru 560026. INDIA Email:yaswanth@bhel.in Telephone number:9642986518
Name and address of the Independent External Monitor for this tender	IEM :Sh. Arun Chandra Verma, IPS (Retd.) and Sh Virendra Bahadur Singh, IPS (Retd.)

Any Deviations from or additions to the "General Conditions of Contract" or "Special Conditions of Contract" require BHEL's express written consent. The General Terms of Business or Sale of the Bidder shall not apply to this tender.

REQUEST FOR QUOTATION

MMI:PU:RF:003

BHARAT HEAVY ELECTRICALS LIMITED
Electronics Division
PB No. 2606, Mysore Road Bangalore - 560026
INDIA

RFQ NUMBER:
AKPBOS0022

RFQ DATE :
26.02.2021

Due Date/Day:10.03.2021WED
Time : 14:00 HRS

(address for communication) :

(for all correspondence)
Purchase Executive : SRINIVAS ANAKAPALL
Phone : 080 26998824
Fax :
E-mail: srinivasa.a@bhel.in

Sl No.	Description	Qty	Unit	Delivery qty	Delivery Date
1	PS0679088873 MMS Superstructure * HSN/SAC : 7308	670	TO	335 335	30.06.2021 30.06.2021

Total Number of Items - 1

1.
2.

TWO PART BID

NOTES:

1. This RFQ is governed by:

a) INSTRUCTIONS TO BIDDERS/SELLERS and GENERAL CONDITIONS OF CONTRACT FOR PURCHASE availableas part of NIT
b) Any other specific Terms and Conditions mentioned.

For and On behalf of BHEL.

SRINIVAS ANAKAPALL
Semiconductors & Pho

PRE QUALIFICATION CRITERIA FOR RFQ NO.AKPBOS0022 FOR SUPPLY OF MMS SUPER STRUCTURE FOR GSECL RAGHANESDA PHASE-1 AND PHASE-2 SPV PROJECTS

For Fabrication capacity:

Bidder to be a manufacturer and to have **in-house forming facility** with minimum capacity of 150 MT per month for C or Z or any other profiles all put together. Vendor to provide the capacity proof for any 2 months within the past three years- Dec '17– Dec '20 showing minimum 150 MT each month.

Or

Minimum capacity of 200MT for any 1 month within the past three years Dec '17– Dec '20.
Calendar months only to be considered for evaluation.

To substantiate above, required documents like delivery challan or tax invoices or any relevant documents to be furnished.

For Hot Dip Galvanization facility:

a.) Either the bidder to have in-house galvanization facility.

Or

b.) Has HDG facility in one of it's sister units.

Or

c.) Has a tie up with another company for HDG Works.

For Sl. No b.) and c.) proper documentation (Stamp paper for tie up/Documentation indicating Sister Unit) to be provided. Once a tie-up is declared during tendering time for HDG works, this tie-up cannot be changed during execution of purchase order.
BHEL reserves the right to visit the vendor's , subsidiary vendor or vendor with whom tie-up is established works and demand all relevant certifications and if found unacceptable, offer is liable for rejection.

For Financial Capability:

Vendors shall furnish the solvency certificate issued by nationalized/scheduled banks for minimum worth of **Rupees One crore (Rs 1 Crore)**, with date of issue not before 6 months from tender opening date.

BHEL reserves the right to ask any other relevant documents to substantiate the above.

PVC Methodology for Tender Ref:AKPBOS0022

Following methodology will be considered for floating tender with PVC clause

1) Joint Plant Committee (JPC) (Constituted by Govt. of India) will publish the steel rates of 1st and 15th of every month generally on 6th and 21st of the month. Rates published are inclusive of GST which is 18% and rates are of 1st and 15th of the month

2) London Metal Exchange (LME) gives Zinc Price in USD. (Official settlement price cash offer)

3) As raw material for this tender is plates of various thickness and ZINC, and as JPC is not publishing rates of required material, PLATES 6 MM rates will be considered for, the following formula is proposed

a) Base Cost per MT= [0.9346 x S0] + [0.0654x {Z0 x TTS0x (1 +BCD0)}]

S0 = Prevailing Basic Rate of Steel (excluding GST) as on 01.01.2021 as per JPC (Mumbai rates)

Z0= LME Official settlement price cash offer of Zinc in USD as on 01.01.2021

TTS0= SBI TT Selling Rate of Currency Code to USD/INR as on 01.01.2021

Rates off SBI Card Rates above 10 Lakhs will be considered.

BCD0= Basic Custom Duty which is presently 5%

Vendors has to quote for Value addition per MT (inclusive of all excluding GST and insurance)

PO Rate per MT = Base Cost per MT as on 01.01.2021 + Value addition quoted by vendor.

4) When Manufacturing Clearance (MC) is given, rate to be considered per MT = PO Rate per MT+ PVC rate per MT. Calculation of PVC rate per MT is given below

PVC Cost per MT = [0.9346x (S1-S0)] + [0.0654x {(Z1xTTS1x (1+BCD1)) - (Z0xTTS0x (1 +BCD0))}]

Prices prevailing on the date of MC will be considered for calculation of PVC

Example: If MC is given between1st to 14th of month, then JPC prices as on 1st of month will be considered and If MC is given between 15th to end of month, then JPC prices as on 15th of month will be considered

S1 = Prevailing Basic Rate of Steel (excluding GST) as on MC date as per JPC (Mumbai rates)

Z1= Prevailing LME Official settlement price cash offer of Zinc in USD as on MC date

TTS1= Prevailing SBI TT Selling Rate of Currency Code to USD/INR as on MC date

Rates off SBI Card Rates above 10 Lakhs will be considered.

BCD1= Prevailing Basic Custom Duty as on MC date

As per documents attached, values for the following are given below

S0 = Prevailing Basic Rate of Steel i.e. Plate 6 mm (excluding GST) as on 01.01.2021 as per JPC (Mumbai)

= Rs 65970/1.18 = Rs 55906.78 /-

Z0= LME Official settlement price cash offer of Zinc in USD as on 01.01.2021

= 2723.5 USD (as per below figure)

TTS0= SBI TT Selling Rate of Currency Code to USD/INR as on 01.01.2021 = 73.52

Rates off SBI Card Rates above 10 Lakhs will be considered.

BCD0= Basic Custom Duty which is presently 5% = 0.05

Hence, Base Cost per MT= [0.9346 x S0] + [0.0654x {Z0 x TTS0x (1 +BCD0)}]

= 0.9346*55906.78 + 0.0654 x (2723.5x73.52x1.05) = 52250.48 + 13749.91= Rs 66000.39 /-

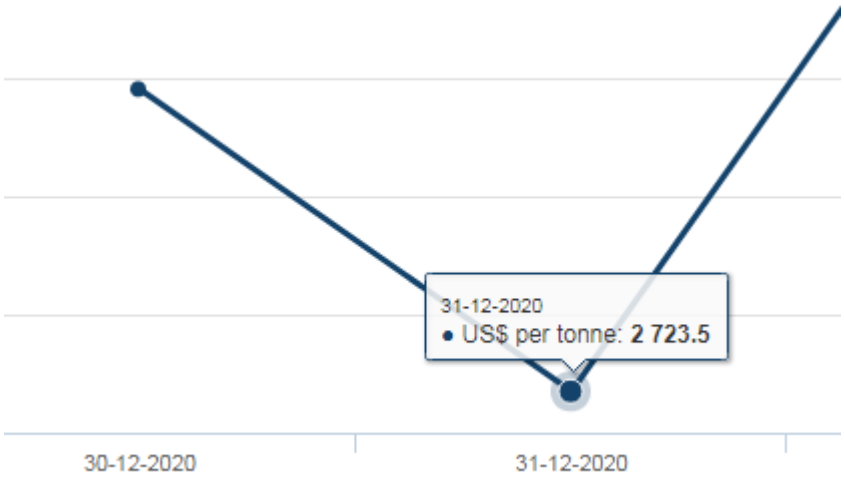

State Bank of India - Card Rates (Above Rs. 10 Lacs)

VALUE_DATE	CURR_CODE	TTBUY	TTSELL	BILLBUY	BILLSELL	TCBUY	TCSELL	CNBUY	CNSELL	PCBUY
01-01-2021	MYR/INR	0.00	0	0	0	0	0	16.95	19.15	0
01-01-2021	THB/INR	0	0	0	0	0	0	230.3	254.85	0
01-01-2021	PKR/INR	0	0	0	0	0	0	0.38	0.46	0
01-01-2021	BDT/INR	0	0	0	0	0	0	0.72	0.86	0
01-01-2021	TRY/INR	0	0	9.57	10.09	0	0	0	0	0
01-01-2021	KRW/INR	0	0	6.55	6.93	0	0	0	0	0
01-01-2021	USD/INR	72.67	73.52	72.61	73.67	72	73.9	71.7	74	72.56
01-01-2021	EUR/INR	88.19	90.36	88.11	90.54	87.35	90.8	86.9	91.05	88.06
01-01-2021	GBP/INR	98.83	101.09	98.75	101.3	97.9	101.6	97.4	101.85	98.68
01-01-2021	JPY/INR	69.9	71.76	69.84	71.91	69.25	72.1	66.6	74.45	69.8
01-01-2021	CHF/INR	81.38	83.78	81.31	83.95	80.6	84.2	77.5	86.95	81.26
01-01-2021	AUD/INR	55.52	57.24	55.47	57.35	55.45	57.5	53.3	59.35	55.44
01-01-2021	NZD/INR	51.85	53.6	51.81	53.71	0	0	49.35	55.6	51.77
01-01-2021	CAD/INR	56.73	58.14	56.68	58.26	56.15	58.45	54	60.35	56.64
01-01-2021	SGD/INR	54.64	55.93	54.59	56.04	0	0	52	58.05	54.56
01-01-2021	HKD/INR	9.31	9.54	9.3	9.56	0	0	8.85	9.9	9.28
01-01-2021	DKK/INR	11.85	12.15	11.84	12.18	0	0	11.25	12.6	11.83
01-01-2021	NOK/INR	8.42	8.62	8.41	8.64	0	0	8	8.95	8.39
01-01-2021	SEK/INR	8.76	9	8.75	9.02	0	0	8.3	9.35	8.72
01-01-2021	BHD/INR	188.94	198.98	188.78	199.38	0	0	183.6	202.6	188.66
01-01-2021	KWD/INR	233.9	247.02	233.7	247.53	0	0	227.25	251.25	233.55
01-01-2021	AED/INR	19.39	20.43	19.38	20.47	0	0	18.85	20.75	19.36
01-01-2021	SAR/INR	18.99	20	18.97	20.04	0	0	18.45	20.35	18.96
01-01-2021	ZAR/INR	4.86	5.12	4.85	5.13	0	0	4.65	5.2	4.84
01-01-2021	CNY/INR	0	0	11.08	11.33	0	0	0	0	0
01-01-2021	OMR/INR	185.04	194.86	0	0	0	0	179.8	198.2	0
01-01-2021	QAR/INR	19.56	20.61	19.55	20.65	0	0	19	20.95	19.53

Note: Currency JPY, THB & KES are calculated in 100 Foreign Currency Unit.

ज्वाइन्ट प्लान्ट कमिटि
(भारत सरकार द्वारा गठित)
JOINT PLANT COMMITTEE
(Constituted by Govt. of India)
An ISO 9001 : 2015 Certified Organisation

DATE: 5th January 2021

JPC MARKET PRICE RETAIL FOR 1st JANUARY 2021

(Rs/Tonnes)

Sl. No.	ITEM	Kolkata	Delhi	Mumbai	Chennai
1	PIG IRON	46800	49940	49570	42780
2	BILLETS 100 MM	48750	49030	49030	51570
3	BLOOMS 150X150 MM	49700	49050	48480	NA
4	PENCIL INGOTS	45500	47720	45430	45630
5	WIRE RODS 6 MM	56000	60920	57900	59120
6	WIRE RODS 8 MM	55130	59890	56930	58650
7	ROUNDS 12 MM	55380	56000	57240	54250
8	ROUNDS 16 MM	55000	56000	57240	54250
9	ROUNDS 25 MM	54250	56000	57240	54250
10	TMT 10 MM	56500	58950	56510	58400
11	TMT 12 MM	56520	57530	55920	58400
12	TMT 25 MM	56800	58220	55940	58400
13	ANGLES 50X50X6 MM	54600	56380	55160	55540
14	ANGLES 75X75X6 MM	53900	54910	54640	55540
15	JOISTS 125X70 MM	52300	57360	55470	55740
16	JOISTS 200X100 MM	52900	56860	55410	55740
17	CHANNELS 75X40 MM	54150	55560	57740	56250
18	CHANNELS 150X75 MM	53650	54760	56360	55740
19	PLATES 6 MM	62500	66280	65970	67510
20	PLATES 10 MM	62100	66280	65450	67510
21	PLATES 12 MM	62000	65890	64940	67510
22	PLATES 25 MM	60000	66080	63910	67510
23	H. R. COILS 2.00 MM	65900	68300	68990	70240
24	H. R. COILS 2.50 MM	65000	68000	67950	68200

'ISPAT NIKETAN', 52/1A, Ballygunge Circular Road, Kolkata - 700 019
'इस्पात निकेतन', 52/1A, बालीगंज सरकुलर रोड, कोलकाता - 700 019
Phone : 91 (033) 2461-4055/4058/4068 Fax : 2461-4063 E-mail : jpc-wb@nic.in Website : www.jpcindiansteel.nic.in

ज्वाइन्ट प्लान्ट कमिटि
(भारत सरकार द्वारा गठित)
JOINT PLANT COMMITTEE
(Constituted by Govt. of India)
An ISO 9001 : 2015 Certified Organisation

DATE: 5th January 2021

JPC MARKET PRICE RETAIL FOR 1st JANUARY 2021

(Rs/Tonnes)

Sl. No.	ITEM	Kolkata	Delhi	Mumbai	Chennai
25	H. R. COILS 3.15 MM	64750	67850	67950	68200
26	C. R. COILS 0.63 MM	75000	78180	79550	79950
27	C. R. COILS 1.00 MM	74300	77000	79010	79360
28	G. P. SHEETS 0.40 MM	82000	82770	79680	79950
29	G. P. SHEETS 0.63 MM	79000	80230	78080	79540
30	G. C. SHEETS 0.40 MM	82000	82230	79900	80130
31	G. C. SHEETS 0.63 MM	79000	82070	78620	80130
32	MELTING SCRAP H M S - I	37750	38060	42070	39730
33	MELTING SCRAP H M S - II	36950	37470	40480	38160
34	SPONGE IRON (COAL BASED)	31340	34860	25890	29110

NOTE:

1) **JPC will not be responsible for the outcome of any work done by any party/user of this report based on the data featured in this report.**
2) **Prices are indicative.**
3) **Prices are inclusive of GST.**
4) All prices are in Rs. /Tonne and has been compiled on the basis of average of Main & Others producers' price.
5) All prices are as on the 1st of January 2021.
6) Prices have been rounded up to the nearest ten.
7) Price for Blooms 150X150MM was not available in Chennai.

JOINT PLANT COMMITTEE O.K.

'ISPAT NIKETAN', 52/1A, Ballygunge Circular Road, Kolkata - 700 019
'इस्पात निकेतन', 52/1A, बालीगंज सरकुलर रोड, कोलकाता - 700 019
Phone : 91 (033) 2461-4055/4058/4068 Fax : 2461-4063 E-mail : jpc-wb@nic.in Website : www.jpcindiansteel.nic.in

Quantity distribution for RFQ AKPBOS0022 for MMS Super Structure for GSECL 100 MW Raghanesda Phase-1 and GSECL 100 MW Raghanesda Phase-2 SPV Projects

Total quantity 670.00 MT (Metric Tonnes) to be shared among 03(Three) vendors in the ratio 50:30:20

Splitting as below (Quantity in Tonnes):

Sl no.	Project	Total (MT)	L-1 Vendor (50%)	L-2 Vendor (30%)	L-3 Vendor (20%)
1	GSECL 100MW Raghanesda-01	335.00	167.5	100.5	67.00
2	GSECL 10MW Raghanesda-02	335.00	167.5	100.5	67.00

The Order Quantity Share as indicated above will be procured from 03(Three) vendors in the ratio 50:30:20 at L1 matched price. If L2 does not accept L1 price, the same offer will be made to L3, L4, L5, so on. If none of the vendors agree to match L1 rate, BHEL reserves the right to order full quantity on L1 vendor or retender for balance quantity.

If L3 does not accept L1 price, the same offer will be made to L4, L5, so on. If none of the vendors agree to match L1 rate, BHEL reserves the right to order L3 QTY on L1 and L2 vendor or retender for balance QTY.

Any changes in splitting ratio based on the MSE act /Make in India policy or due to any other reason, intimation will be given only to the vendors who have participated in this tender, hence it is mandatory that vendors should participate in the tender.

COPYRIGHT AND CONFIDENTIAL

The information on this document is the property of Bharat Heavy Electricals Limited.

It must not be used directly or indirectly in anyway detrimental to the interest to the company

Technical Specification for Supply of MMS-Superstructure (Other Items)

Revision details :R 00	Prepared	Approved	Date
	NY	PM	20.02.2021

Acronym Used:

1. MTC = Mill test Certificate.
2. MQP= Material quality plan.
3. OEM=Original Equipment manufacturer.
4. MMS = Module Mounting Structures.
5. PSI= Pre shipment inspection.

1.0 Introduction

This document describes the technical specification for MMS-Superstructure that constitute the solar array of the plant.

2.0 Vendor scope of supply

#	Item description	Qty	Fabrication Details
1	Supply of MMS-Superstructure (Others)	As per Tender	As per BHEL BOM & drg. which will be given during manufacturing clearance

3.0 Enclosures to this tender

1. Tentative Drawings of superstructure for tender purpose.
2. Typical sample MQP for reference purpose.

4.0 Sub-vendors of steel sheets

Vendor shall procure the raw materials (steel sheets) from OEM sub-vendors viz TISCO, SAIL, JINDAL, RINL, JSW, TATA. In case of any sub-vendors other than the above, vendor to request the alternate sub vendor, BHEL reserves the right to approve or disapprove the same.

5.0 Fabrication

Fabrication of MMS –Superstructure (except earthing strips) to be as per the drawing furnished by BHEL-EDN which will be given along with manufacturing clearance.

6.0 Galvanization

All items shall be hot dip galvanized with minimum GSM 610 g/ sqm and/or minimum coating thickness of 80 microns for protection against corrosion. Galvanization shall conform to IS-2629, 4759 & 4736 as applicable. Galvanization shall be measured with elcometer or the material can be sent for testing at NABL as and when required. No averaging is allowed for measuring the thickness of galvanization

A typical sample of MQP for the MMS is enclosed. Inspection reports to be made with respect to the same. Mass fabrication to commence from the date of Manufacturing Clearance from BHEL only.

7.0 MQP.

A typical sample of MQP for the MMS is enclosed. Inspection reports to be made with respect to the same. Mass fabrication to commence from the date of Manufacturing Clearance from BHEL only.

8.0 Test reports

Every PSI Call should accompany the following reports.

1. MTC.
2. Internal inspection report (Dimensional + galvanization thickness) as per instruction specified in BHEL MQP and BHEL Drawing.
3. BHEL- EDN will go through the reports and depute personnel for PSI.
4. PSI to be by BHEL/TPI/Customer

9.0 Packing instructions

Small components should be packed in bulk (preferable in closed boxes) so that the items can be unloaded easily at site.
Earthing strips should also be packed together and bundled with a strip for easy unloading

Tentative Bill of Material for Module Mounting Structures									
NOTE:									
1.GALVANIZATION TO 80 MICRONS at any Point									
GSECL 200 MW									
Mark No	Item Description (Dimensions in mm)	Minimum yeild Strength	Length/Area	CS Area	Unit Wt	Total wt - Ungalvanized(Approx)	Total wt galvanized(Approx)	No to be supplied	Total Weight
	Plates		mm	cm2	kg/m	kg	kg	Nos	MT
PL1	Purlin splice (140X70X4)	250 MPA	140	2.8	2.20	11.08	11.85	509040	167.61
PL2	Column Plate (340x100x5)	250 MPA	340	5	3.93	13.35	14.28	141400	201.91
PL3	Purlin Cleat (75LU50X3)	250 MPA	50	3.75	2.94	5.89	6.30	565600	89.08
	SMB Sections								
	Plates								
SM1	Angle 50LU50x5.0	250 MPA	3190	4.462	3.50	33.52	35.87	2160	25.82
SM2	Flat Strip (50X5)	250 MPA	3190	2.5	1.96	6.26	6.70	720	4.82
	Earthing Strip								
			kms	cm2	kg/m	kg	kg		
ES1	Earthing Strip 25X3	250 MPA	35	0.75	0.59	20606.25	22048.69	2	44.10
ES2	Earthing Strip 25x6	250 MPA	32	1.5	1.18	37680.00	40317.60	2	80.64
ES3	Earthing Strip 65x8	250 MPA	5	5.2	4.08	20410.00	21838.70	2	43.68
					Contingeny for any changes in design				12.35
							Total MT		670.00

COPYRIGHT AND CONFIDENTIAL
THE INFORMATION ON THIS DOCUMENT IS THE PROPERTY OF BHARAT HEAVY ELECTRICALS LTD. IT MUST NOT BE USED DIRECTLY OR INDIRECTLY IN ANY WAY DETRIMENTAL TO THE INTEREST OF THE COMPANY.

DRG. No.

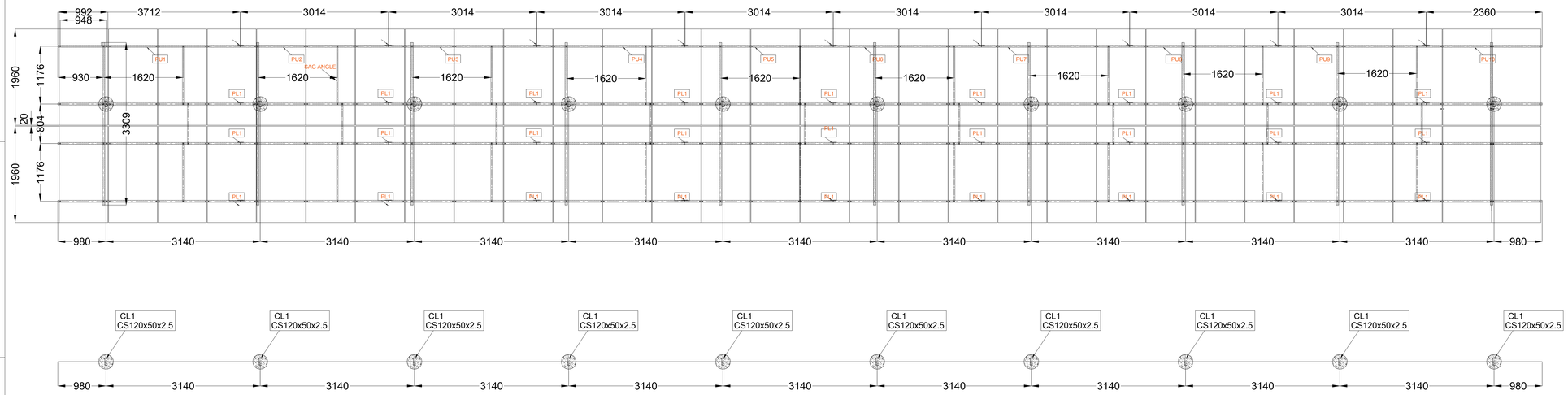

PLAN OF STRUCTURE (WITH SOLAR MODULE) FOR 0°

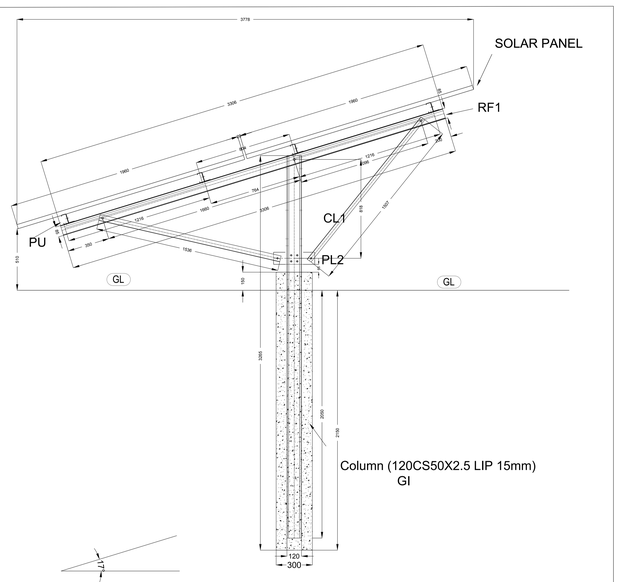

SIDE VIEW FOR FIXED TILT
PV MODULE 1960x992x35
ZNSHINE

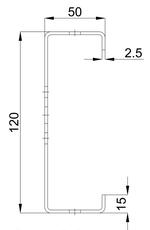

CL1-COLUMN
(CS120x50x2.5x15)
SCALE - 20:1

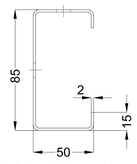

RF1-RAFTER
(CS85x50x2x15)
SCALE - 20:1

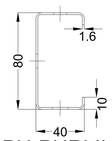

PU-PURLIN
(CS80x40x1.6x10)
SCALE - 20:1

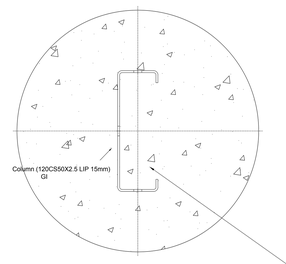

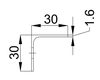

SAG Angle
(30LU30x1.6)
SCALE - 20:1

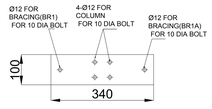

PL2-COLUMN
PLATE (340 X100X5)
SCALE - 20:1

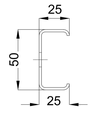

BR1 BRACING
(CU50x25x2)
SCALE - 20:1

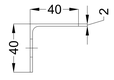

BR1A-BRACING
(40LU40x2)
SCALE - 20:1

GENERAL NOTES

1. ALL DIMENSIONS ARE IN MILLIMETERS UNLESS OTHERWISE SPECIFIED.
2. DO NOT SCALE THE DRAWING ONLY WRITTEN DIMENSIONS TO BE READ.

NOTES:(This note has to be read alongwith the Bill of material).

1. DIMENSIONS FOR COLD ROLLED STEEL ANGLE/CHANNEL SECTIONS SHALL BE IN ACCORDANCE WITH IS:811:1987.
2. DIMENSIONS OF PLATES, FLAT BARS SHALL CONFORM TO IS:1730.
3. FABRICATION AND ERECTION SHALL BE CARRIED OUT IN ACCORDANCE WITH IS:800 AND IS:801.
4. ALL MMS MEMBERS TO BE HOT DIP GALVANISATED IN ACCORDANCE WITH IS:2629-1985 AND IS 4759. HOWEVER THE MINIMUM GALVANIZATION THICKNESS TO BE 80 MICRONS AT ANY POINT.
5. NO WELDING ON ANY MEMBER.
6. GENERAL ASSEMBLY TOLERANCE LINEAR +/- 2MM.
7. GENERAL ASSEMBLY TOLERANCE ANGULAR +/- 1.
8. HOLE SIZES ARE SHOWN AFTER GALVANIZATION /TOLERANCE.
9. REMOVE ALL SHARP AND BURR EDGES.

CROSS SECTION OF
PILE FOUNDATION

PROJECT TITLE : 100 MWp SOLAR POWER PROJECTS
AT GSECL(RAGANESDHA)

CLIENT : GSECL

CONSULTANT:

REV.	DATE	ALTERED / CHECKED / APPROVED	REV.	DATE	ALTERED / CHECKED / APPROVED

	NAME	SIGN	DATE
DRAWN	NY		
CHECKED	PM		
APPROVED	MS		

DISTRIBUTION OF PRINTS

DEPT.	CODE

BHARAT HEAVY ELECTRICALS LIMITED.
ELECTRONICS DIVISION, BANGALORE

TITLE: BHEL- GSECL- MMS-015

No. OF SHEETS	
SHEET No.	
REV	04

BHEL DRG. No. MODULE MOUNTING STRUCTURE GENERAL ARRANGEMENT - ZNSHINE

REF. DRG. No.
SIGN. & DATE
INVENTORY No.

COPYRIGHT AND CONFIDENTIAL
THE INFORMATION ON THIS DOCUMENT IS THE PROPERTY OF BHARAT HEAVY ELECTRICALS LTD. IT MUST NOT BE USED DIRECTLY OR INDIRECTLY IN ANY WAY DETRIMENTAL TO THE INTEREST OF THE COMPANY.

DRG. No.

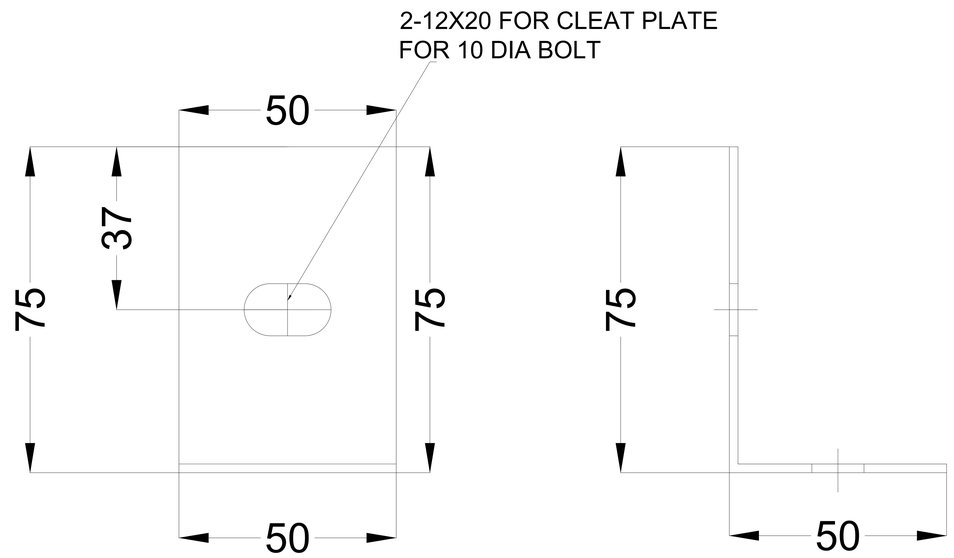

FRONT VIEW

SIDE VIEW

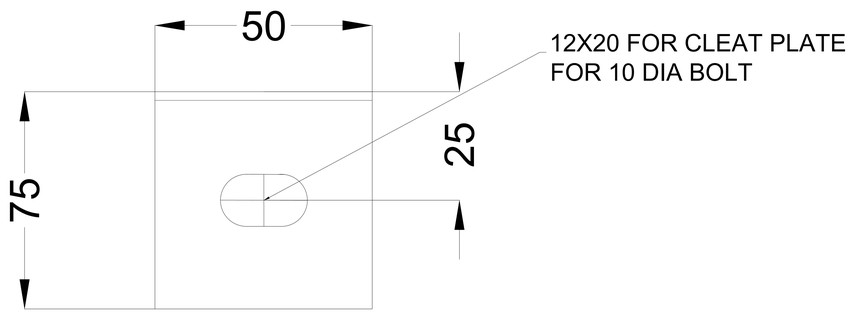

TOP VIEW

PURLIN CLEAT

(75LU50x3)

SCALE - 20:1

PROJECT TITLE : 100 MWp SOLAR POWER PROJECTS AT GSECL(RAGANESDHA)

CLIENT : GSECL

CONSULTANT:

REV.	DATE	ALTERED / CHECKED / APPROVED	REV.	DATE	ALTERED / CHECKED / APPROVED

	NAME	SIGN	DATE
DRAWN	NY		
CHECKED	PM		
APPROVED	MS		

DISTRIBUTION OF PRINTS

DEPT.	CODE

BHARAT HEAVY ELECTRICALS LIMITED.
ELECTRONICS DIVISION, BANGALORE

TITLE: PURLIN CLEAT

No. OF SHEETS	01
SHEET No.	19
REV	03

BHEL DRG. No. BHEL-GSECL-100MW-015

REF. DRG. No.

SIGN. & DATE

INVENTORY No.

COPYRIGHT AND CONFIDENTIAL
THE INFORMATION ON THIS DOCUMENT IS THE PROPERTY OF BHARAT HEAVY ELECTRICALS LTD. IT MUST NOT BE USED DIRECTLY OR INDIRECTLY IN ANY WAY DETRIMENTAL TO THE INTEREST OF THE COMPANY.

DRG. No.

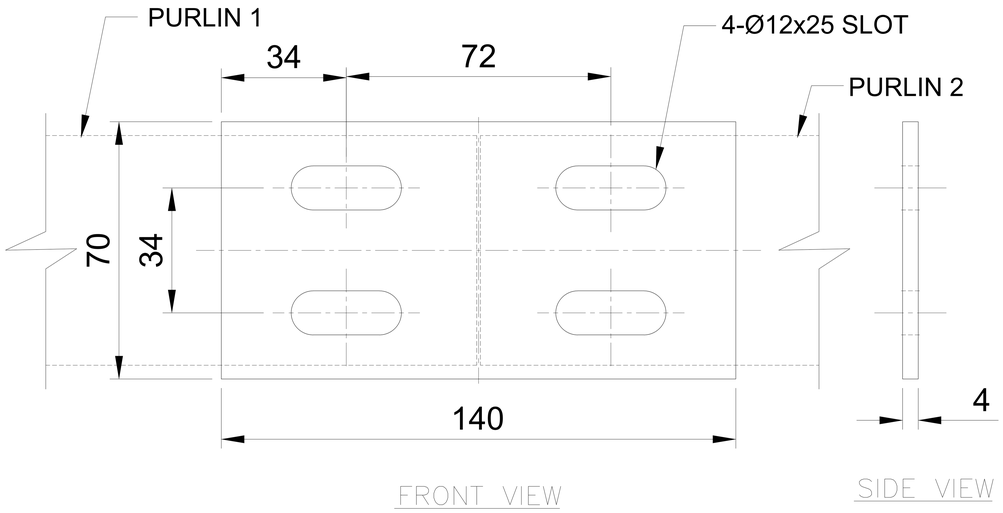

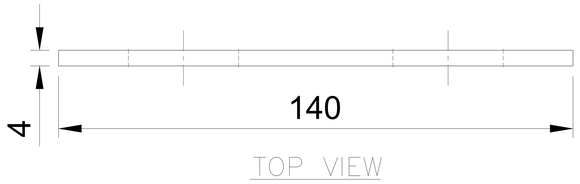

PURLIN SPLICE (PL1)

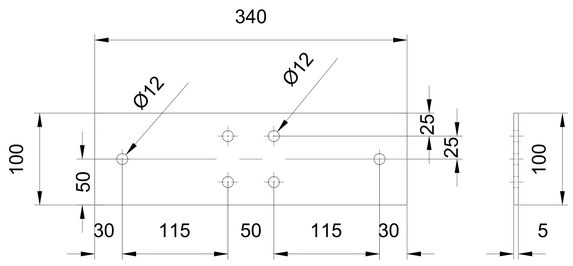

COLUMN PLATE (PL2)

REGENERATE THE DRAWING BEFORE PRINTING

PROJECT TITLE : 100 MWp SOLAR POWER PROJECTS AT GSECL(RAGANESDHA)

CLIENT : GSECL

CONSULTANT:

REV.	DATE	ALTERED / CHECKED / APPROVED	REV.	DATE	ALTERED / CHECKED / APPROVED

	NAME	SIGN	DATE
DRAWN	NY		
CHECKED	PM		
APPROVED	MS		

DISTRIBUTION OF PRINTS

DEPT.	CODE

BHARAT HEAVY ELECTRICALS LIMITED.
ELECTRONICS DIVISION, BANGALORE

TITLE: CLUMN PLATE – PL2–E
PULIN SPLICE PLATE – PL1

No. OF SHEETS	01
SHEET No.	20
REV	03

BHEL DRG. No. BHEL–GSECL–100MW–015

REF. DRG. No.

SIGN. & DATE

INVENTORY No.

MANUFACTURING QUALITY PLAN (MQP)													
			ITEM :	MODULE MOUNTING STRUCTURE FOR SPV PLANT			PROJECT NAME:	GSECL-100 MW Raghanesda and 75 MW Dhuvaran					
			MQP NO.:				CONTRACT NO.:						
			REV. NO.:				CONTRACTOR:						
			DATE :				CUSTOMER :	BHEL					
Sr. No.	Component & Operation	Characteristics	Class	Typ of Check	Quantum of Check		Reference Document	Acceptance Norms	Format of Record		Agency		Remarks
					M	C					M	C	
1	2	3	4	5	6		7	8	9	D	10		11
A	**Structures**												
1	**RAW MATERIAL**												Vendor shall procure the raw materials (steel sheets) from OEM sub-vendors viz TATA, JINDAL, RINL. In case of any sub-vendors other than the above, vendor, after receipt of PO from BHEL, shall obtain approval from BHEL/GSECL.
1.1	**Hot Rolled Structures Steel**-As per BOM and BHEL Dwg no (3 679 05 00xxx)	a) Chemical Composition	Major	Chemical	1 Sample/40 MT or Part thereof for each class of Product.	Each lot	Approved. Drg IS: 2062-2011 IS: 8500-1991 IS: 228-1987 IS: 1608-2005 IS: 1599-1983		Procedure's/ fabricator's Certificate/ Check Test Reports	√	V	V	IS:2062-2011/Material Grade refrred as per drawing/BOM shall be used. All tolerances as per relevant code/Tech Spec/drawing
		b) Tensile Test(TS, YS %Elongation)	Major	Mech.	1 Sample/40 MT or Part thereof for each class of Product.	Each lot	Approved. Drg IS: 2062-2011 IS: 8500-1991 IS: 228-1987 IS: 1608-2005 IS: 1599-1983	Approved. Drg IS: 2062-2011 IS: 8500-1991 IS: 228-1987 IS: 1608-1995 IS: 1599-1983	Procedure's/ fabricator's Certificate/ Check Test Reports	√	V	V	
		c) Bend Test	Major	Mech.	1 Sample/40 MT or Part thereof for each class of Product.	Each lot	Approved. Drg IS: 2062-2011 IS: 8500-1991 IS: 228-1987 IS: 1608-2005 IS: 1599-1983	Material Shall be free from surface defects like lamination, rough,jagged & imperfect edges & other harmful defect(removal) of minor surface defect as per IS:2062C1-7 is acceptable	Procedure's/ fabricator's Certificate/ Check Test Reports	√	V	V	
		d) Visual Check for Surface	Major	Visual	100%	Each lot	Approved. Drg IS: 2062-2011 IS: 8500-1991 IS: 228-1987 IS: 1608-2005 IS: 1599-1983		Procedure's Inspection Report	√	P	V	
		e)Dimension	Major	Measure	As per IS:2500-1992 SSP Level -1 AQL 6.5	Random for each lot	IS:808-1989 (Angles) IS:1852-1985 (Plates) IS:1730-P-1-1989 IS: 2062-2011	IS:808-1989 (Angles) IS:1852-1985 (Plates) IS:1730-P-1-1989 IS: 2062-2011	Fabricator's Inspection Report	√	P	V	
1.2	**Cold formed sections**-As per BOM in BHEL Dwg no (3 679 05 00xxx)	a) Chemical Composition	Major	Chemical	100%	Each lot	Approved. Drg IS:811 IS: 1161 or IS: 1079	Approved. Drg IS:811 IS: 1161 or IS: 1079	MTC & Supplier's Inspection report	√	V	V	All cold formed steel material shall have a minimum Fy as per BOM BHEL Dwg no (3 679 05 00xxx).
		b) Tensile Test(TS, YS %Elongation)	Major	Mech.	100%	Each lot	Approved. Drg IS:811 IS: 1161 or IS: 1079	Approved. Drg IS:811 IS: 1161 or IS: 1079	MTC & Supplier's Inspection report	√	V	V	
		c) Bend Test	Major	Mech.	100%	Each lot	Approved. Drg IS:811 IS: 1161 or IS: 1079	Approved. Drg IS:811 IS: 1161 or IS: 1079	MTC & Supplier's Inspection report	√	V	V	
		d) Visual Check for Surface	Major	Visual	100%	Each lot	Approved. Drg IS:811 IS: 1161 or IS: 1079	Approved. Drg IS:811 IS: 1161 or IS: 1079	MTC & Supplier's Inspection report	√	V	V	

MANUFACTURING QUALITY PLAN (MQP)

ITEM :	MODULE MOUNTING STRUCTURE FOR SPV PLANT	**PROJECT NAME:**	GSECL-100 MW Raghanesda and 75 MW Dhuvaran
MQP NO.:		**CONTRACT NO.:**	
REV. NO.:		**CONTRACTOR:**	
DATE :		**CUSTOMER :**	BHEL

Sr. No.	Component & Operation	Characteristics	Class	Typ of Check	Quantum of Check		Reference Document	Acceptance Norms	Format of Record		Agency		Remarks
					M	C					M	C	
1	2	3	4	5	6		7	8	9	D	10		11
		e)Dimension	Major	Measure	As per IS:2500-1992 SSP Level -1 AQL 6.5	Random for each lot	IS:811	IS:811	Fabricator's Inspection Report	√	P	V	
		i) For cold formed sections (columns .) Length, out of squareness, camber-weight	Major	Measure	As per IS:2500-1992 SSP Level -1 AQL 6.5	Random for each lot	IS:811	IS:811	Fabricator's Inspection Report	√	P	V	
1.3	Zinc	Chemical Composition	Major	Measure	1 Sample/lot	Random for each lot	IS:209-1992	IS:209-1992 Zn-99.5%	Procedure's TC/ Check Test Report	√	P	V	
2	**IN PROCESS INSPECTION**												
2.1	Fabrication of parts of assy.	a)Straightening	Major	Visual	100%	Random for each lot	IS:802-P-11-1978	IS:802-P-11-1978	Fabricator's Inspection Report	√	P	V	
		b)Cropping (Cutting)	Major	Visual	1st piece & every 100th piece	Random for each lot	Approved drgs. Shop Sketches	Approved Drgs./Tech. Spec.	Fabricator's Inspection Report	√	P	V	
		c)Stamping (identification-mark Number)	Major	Visual	100%	Random for each lot	Approved Drgs./ Tech. Spec.	Approved Drgs./Tech. Spec.	Fabricator's Inspection Report	√	P	V	
		d) Making hole by Punching/Drilling.	Major	Measure	1st piece & every 100th piece	Random for each lot	IS:802-P-11:1978	Holes should be perpendicular to surface & difference in dia. Of holes on the two sides of plates / angle should not be more then 0.8mm. Holes near bends to be punched/ drilled.	Fabricator's Inspection Report	√	P	V	Punching may be adopted for section upto 12mm thick. For thicker drilling to be done
		e) Edge Security	Major	Measure	1st piece & every 100th piece	Random for each lot	IS:802-P-11:1978	IS:802-P-II:1978 Table. 1	Fabricator's Inspection Report	√	P	V	
		f)Hole to Hole Distance	Major	Measure	1st piece & every 100th piece	Random for each lot	IS:802-P-11:1978	Tolerance cumulative # 2mm & between consecutive hole #1mm	Fabricator's Inspection Report	√	P	V	
		g)Overall length of members	Major	Measure	1st piece & every 100th piece	Random for each lot	IS:802-P-11:1978	Tolerance #2mm	Fabricator's Inspection Report	√	P	V	
		h) Gauge Distance	Major	Measure	1st piece & every 100th piece	Random for each lot	IS:802-P-11:1978	Tolerance # 1mm	Fabricator's Inspection Report	√	P	V	
		i) Notching flange cut, corner cut & level cut	Major	Measure	1st piece & every 100th piece	Random for each lot	IS:802-P-11:1978	5mm on specified length of cut operation by shearing up to 12mm thick & by gas cutting for material above 12mm thick/IS:802-P-II:1978 Table. 1	Fabricator's Inspection Report	√	P	V	
		j) Heel Grinding	Major	Measure	1st piece & every 100th piece	Random for each lot	IS:802-P-11:1978	After Grinding thickness on heel should be equal or more than the thickness of the member with +2mm/.0mm/ as per spec.	Fabricator's Inspection Report	√	P	V	
		k) Bending MS	Major	Measure	100%	Random for each lot	IS:802-P-11:1978	Tech Specification cold bend upto 76X6mm upto 10, upto 100X8 upto 5 all other angle section & bend angle shall be bent hot.	Fabricator's Inspection Report	√	P	V	
		l) Bending MS Plate	Major	Measure	1st piece & every 100th piece	Random for each lot	IS:802-P-11:1978	Cold bend 12mm thick upto 15angle , greater bend & other thickness shall be bent hot	Fabricator's Inspection Report	√	P	V	

MANUFACTURING QUALITY PLAN (MQP)													
			ITEM :	MODULE MOUNTING STRUCTURE FOR SPV PLANT			PROJECT NAME:	GSECL-100 MW Raghanesda and 75 MW Dhuvaran					
			MQP NO.:				CONTRACT NO.:						
			REV. NO.:				CONTRACTOR:						
			DATE :				CUSTOMER :	BHEL					
Sr. No.	Component & Operation	Characteristics	Class	Typ of Check	Quantum of Check		Reference Document	Acceptance Norms	Format of Record		Agency		Remarks
					M	C					M	C	
1	2	3	4	5	6		7	8	9	D	10		11
		m) Other Dimension	Major	Measure	1st piece & every 100th piece	Random for each lot	IS:802-P-11:1978/ IS:7215-1974	IS:7215-1974	Fabricator's Inspection Report	√			
2.3	**GALVANIZING**												
2.31	Degreasing (Acid base)	a)Solution Strength	Major	Visual	1 Sample Daily	Random for each lot	IS:2629-1985	IS:2629-1985	Galvanizer QC Records	√	P	V	
		b)PH Value	Major	Chem.	1 Sample Daily	Random for each lot	IS:2629-1985	IS:2629-1985	Galvanizer QC Records	√	P	V	
2.32	Rinsing	a)Cleanliness	Major	Visual	1 Sample Daily	Random for each lot	IS:2629-1985	IS:2629-1985	Galvanizer QC Records	√	P	V	
2.33	Pickling	a)Acid Content	Major	Chem.	1 Sample Daily	Random for each lot	IS:2629-1985	IS:2629-1985	Galvanizer QC Records	√	P	V	
		b)Iron Content	Major	Chem.	1 Sample Daily	Random for each lot	IS:2629-1985	IS:2629-1985	Galvanizer QC Records	√	P	V	
2.34	Rinsing	Cleanliness (Mill Scale paint marks etc.)	Major	Chem.	1 Sample Daily	Random for each lot	IS:2629-1985	IS:2629-1985	Galvanizer QC Records	√	P	V	
2.35	Pre-Fluxing	a)Dry Fluxing	Major	Chem.	1 Sample Daily	Random	IS:2629-1985	IS:2629-1985	Galvanizer QC Records	√	P	V	Pre-Fluxing in Zinc Chlorides & ammonium chloride solution.
		b)Iron Content	Major	Chem.	1 Sample Daily	Random	IS:2629-1985	IS:2629-1985	Galvanizer QC Records	√	P	V	
		c)Specific Gravity	Major	Chem.	1 Sample Daily	Random	IS:2629-1985	50gm/Ltr. Max 1.11 to 1.30	Galvanizer QC Records	√	P	V	
		d)pH Value	Major	Chem.	1 Sample Daily	Random	IS:2629-1985	4 to 5	Galvanizer QC Records	√	P	V	
		e)Temperature	Major	Measure	Hourly	Random	IS:2629-1985	IS:2629-1985	Galvanizer QC Records	√	P	V	
2.36	Pre Heating	Temperature	Major	Measure	Hourly	Random	IS:2629-1985	IS:2629-1985	Galvanizer QC Records	√	P	V	Calibrated Instrument to be used.
2.37	Hot Dip Galvanizing	a)Temperature	Major	Measure	Continuous recording & hourly measurement	Random	IS:2629:1985	440 to 460 deg. Celsius	Galvanizer's QC Records.	√	P	V	Zinc Bath temperature to be recorded continuously on graph & hourly manual recording shall also be done using digital temp. indicator & actual verification by thermometer.
		b)immersion time	Major	Measure	Each Lot	Random	IS:2629-1985	IS:2629-1985	Galvanizer's QC Records.	√	P	V	
		c) Removal of excessive zinc while lifting from zinc bath by bumping process.	Major	Measure	Each Item	Random	IS:2629-1985	IS:2629-1985	Galvanizer's QC Records.	√	P	V	Wiping & scrapping process not to be used.
2.38	Quenching or Running Water	Cooling & cleaning.	Major	Measure	Each Item	Random	IS:2629-1985	IS:2629-1985	Galvanizer's QC Records.	√	P	V	
2.39	Post Treatment or Dichromating.	Solution Strength	Major	Chem.	Once in day	Random	IS:2629-1985	IS:2629-1985	Galvanizer's QC Records.	√	P	V	
2.4	Check on member after galvanizing.	a) Surface Defect & Finish.	Major	Visual	100%	Random	IS:2629-1985	IS:2629-1985	Galvanizer's QC Records.	√	P	V	
		b) Thickness of Zinc Coating.	Major	Measure	Each Batch	Random	IS:4759:1996	IS:4759:1996	Galvanizer's QC Records.	√	P	V	
		c) Mass of Zinc Coating	Major	Chem.	1 Sample/ Shift	Random	IS:4759:1996	IS:4759:1996	Galvanizer's QC Records.	√	P	V	
		d) Uniformity of zinc coating (Preece Test)	Major	Chem.	Sample/ Shift	Random	IS:2633:1986	IS:2633:1986	Galvanizer's QC Records	√	P	V	

MANUFACTURING QUALITY PLAN (MQP)													
			ITEM :	MODULE MOUNTING STRUCTURE FOR SPV PLANT			PROJECT NAME:	GSECL-100 MW Raghanesda and 75 MW Dhuvaran					
			MQP NO.:				CONTRACT NO.:						
			REV. NO.:				CONTRACTOR:						
			DATE :				CUSTOMER :	BHEL					
Sr. No.	Component & Operation	Characteristics	Class	Typ of Check	Quantum of Check		Reference Document	Acceptance Norms	Format of Record		Agency		Remarks
					M	C					M	C	
1	2	3	4	5	6		7	8	9	D	10		11
		e) Adhesion test of zinc coating (Pivot Hammer Test/Knife Test)	Major	Chem.	Sample/ Shift	Random	IS:2633:1986	No Removal or Lifting of Coating between hammer impression/ coating should not be peeled off.	Galvanizer's QC Records	√	P	V	
2.41	Stenciling of Mark/Number	Marking	Major	Visual	100%	Random	Approved Drg.	Approved Drg.	Galvanizer's QC Records	√	P	V	At Both Ends with black Paint
3	**FINAL INSPECTION**												
3.1	Fabrication Member after Galvanizing	a)Surface Finish, Defects & dichromating.	Major	Visual	100%	Random for each lot as per IS 2500 for reduced inspection	IS:2629:1985	IS:2629:1985	Final Inspection Report	√	P	W	Test qty./ sample no.s shall be as per offered lot size and IS:2500 for reduced inspection level S-4- to be fixed at time of offering.
		b)Dimensions	Major	Measure	Random Sample from Each lot offered for inspection on single occasion	Random for each lot as per IS 2500 for reduced inspection	IS:4759:1996 IS:802-P-1:1978	IS:4759:1996 IS:802-P-1:1978		√	P	W	
3.2	Verification of basic material quality	a)Chemical Composition	Major	Chem.	Random sample from each lot offered for inspection on single occasion.	Random for each lot as per IS 2500 for reduced inspection	Approved Drg. IS:2062:1992 IS:8500:1991 IS:228:1987 IS1608:1995 IS:1599:1985	Approved Drg. IS:2062:1992 IS:8500:1991 IS:228:1987 IS1608:1995 IS:1599:1985	Fabricator's Test Reports	√	P	V	Sample for chemical test to be sealed for third party lab or test to be witnessed at manufacturer's lab depending on availability of apparatus.
		b)Tensile Test (TS,YS,%E)	Major	Mech.	Random sample from each lot offered for inspection on single occasion.	Random for each lot as per IS 2500 for reduced inspection	Approved Drg. IS:2062:1992 IS:8500:1991 IS:228:1987 IS1608:1995 IS:1599:1985	Approved Drg. IS:2062:1992 IS:8500:1991 IS:228:1987 IS1608:1995 IS:1599:1985	Fabricator's Test Reports	√	P	W	
		c)Bend Test	Major	Mech.	Random sample from each lot offered for inspection on single occasion.	Random for each lot as per IS 2500 for reduced inspection	Approved Drg. IS:2062:1992 IS:8500:1991 IS:228:1987 IS1608:1995 IS:1599:1985	Approved Drg. IS:2062:1992 IS:8500:1991 IS:228:1987 IS1608:1995 IS:1599:1985	Fabricator's Test Reports	√	P	W	
3.3	Fillet Welding Quality	Weld Quality	Major	Visual	100%	Random for each lot as per IS 2500 for reduced inspection	IS:822:1970 & As per Approved Drg.	IS:822:1970 & As per Approved Drg.	Fabricator's Test Reports	√	P	W	W=Random10%. Butt weld not permitted.
3.4	Galvanizing	a)Thickness of Zinc Coating	Critical	Measure	Random	Random for each lot as per IS 2500 for reduced inspection	IS:2629:1985/ As per tech. spec.	IS:2629:1985/ As per tech. spec.	Fabricator's QC Reports	√	P	W	
		b)Mass of Zinc coating	Critical	Measure	Sample/ each thickness offered for insp. on single occasion	Random for each lot as per IS 2500 for reduced inspection	IS:6745:1972/ As per tech spec.	IS:6745:1972/ As per tech spec.	Fabricator's QC Reports	√	P	W	
		c)Uniformity of Zinc Coating	Critical	Measure	Sample/ each thickness offered for insp. on single occasion	Random for each lot as per IS 2500 for reduced inspection	IS:2633:1986/ As per tech spec.	IS:2633:1986/ As per	Fabricator's QC Reports	√	P	W	
		d)Adhesion Test of Zinc Coating (Pivot Hammer/Knife Test)	Critical	Measure	Sample/ each thickness offered for insp. on single occasion	Random for each lot as per IS 2500 for reduced inspection	IS:2629:1985	IS:2629:1985	Fabricator's QC Reports	√	P	W	
3.5	Review of Documents (TC/TR)	a)Document Review	Major	Review		Random	As Applicable	As Applicable	As Per QA Plan	√	P	V	
4	PACKING STORING /BUNDLING & HANDLING	Packing	Major	Visual	Every Lot	Random	IS:802-P-1:1978	Piece of light sections to wire bundled & heavy sections to be supplied loose. Stacking to have proper ventilation.	As Per QA plan	√	P	V	1)Sequential supplies to be monitored & assured by main contractor.

MANUFACTURING QUALITY PLAN (MQP)

ITEM :	MODULE MOUNTING STRUCTURE FOR SPV PLANT	**PROJECT NAME:**	GSECL-100 MW Raghanesda and 75 MW Dhuvaran
MQP NO.:		**CONTRACT NO.:**	
REV. NO.:		**CONTRACTOR:**	
DATE :		**CUSTOMER :**	BHEL

Sr. No.	Component & Operation	Characteristics	Class	Typ of Check	Quantum of Check		Reference Document	Acceptance Norms	Format of Record		Agency		Remarks
					M	C					M	C	
1	2	3	4	5	6		7	8	9	D	10		11
5	DESPATCH	Verification a)Sequential supplies b)Stenciling/Part No. c)Quality	Major	Review	As per packing List	Random	Appd. Drgs. & BOM	Appd. Drgs. & BOM	Fabricator's Dispatch Records	√	P	V	2)Material rejected by Customer shall be kept under separated custody marked with plant till all the supplies are dispatched to site or destroyed by cutting Presence of Customer Representative.

LEGEND:

M: MANUFACTURER
C:BHEL and/or GSECL
D:DOCUMENT
P:PERFORM
W:WITNESS
V: VERIFICATION

MANUFACTURER

CUSTOMER

BHEL UNIT	**EDN Bangalore**	
RFQ/NIT/Enquiry no.	**AKPBOS0022**	
Description	**Supply of MMS Super strcuture for GSECL Raghanesda Phase-1 and GSECL Raghanesda Phase-2 SPV Projects.**	

Techno Commercial Form

VENDOR NAME	M/s _____	**Note:** **1)Vendor Name To be Filled by vendor.** **2)This form to be signed with Name and seal on all the pages and to be uploaded as acceptance to technocommercial conditions along with other applicable documents under "2021_BHEL_2509_pack1_10073" packet of the NIT** **3) Acceptance and submission of signed technocommercial form is treated as confirmation on "NIL DEVIATION ON TECHNO-COMMERCIAL TERMS" indicated in the techno commercial form.Technical or Commercial Deviation if any shall be separately uploaded under "2021_BHEL_2509_pack1_10073" packet of the NIT.** **Deviations indicated in any other place shall not be considered by BHEL and the same are not valid.**

Sr. No	DESCRIPTION	Details
1	TENDER TYPE	THIS TENDER IS NOT A GLOBAL TENDER. THE TENDER IS INDIGENEOUS OPEN TENDER . PLEASE REFER TENDER DOCUMENTS FOR DETAILED TERMS AND CONDITIONS APPLICABLE FOR THE TENDER.
2	Price Basis	PVC clause applicable.Please refer PVC Write up enclosed in NIT document. Vendor to quote FOR "BASIC VALUE ADDITION PER MT INCLUSIVE OF ALL PRICES EXCLUDING GST,TCS AND INSURANCE". Total Price for PO placement shall be calculated as per Formula indicated in the PVC calculation write up. PVC calculation formula is as per PVC calculation write up of NIT document
3	Terms of Delivery	FOR INDIGENOUS VENDORS: Free On Road Basis to GSECL 100MW Raghanesda-01 and GSECL Raghanesda-02 SPV Plants
4	Delivery Period	**Supply:** BHEL will give Manufacturing clearance depending upon the requirement at project site. Delivery : Delivery to be completed within 12 weeks from date of issue of Manufacturing Clearance.
5	Payment Term	FOR INDIGENOUS VENDORS:(a) Supply: 100% of supply value including PVC with taxes will be paid with credit 45 days from the receipt of material or credit 15 days from the date of submission of complete set of documentation whichever is later. PBG is not applicable
6	Payment Term	FOR FOREIGN VENDORS(a) :NOT APPLICABLE
7	Payment Term	(b) For any deviation in payment term, the offer will be liable for loading as per Clause G of ITB. If loading not acceptable, offer will be outrightly rejected.
8	Evalution of L1 vendor	Evaluation to be done on package wise, L1 of Supply on “FOR destination” basis to site will only be considered.
9	Warranty	Warranty : 18 months from supply
10	Pre Shipment Inspection	(a) Pre Shipment Inspection will be carried out by BHEL/Customer for which test report shall be sent atleast one week in advance.
11	Pre Shipment Inspection	(b) Pre Shipment Inspection charges , if any, shall be considered while evaluating your offer to arive at "Total Cost to BHEL".The charges for the same shall be informed to you before Price Bid Opening.
12	Penalty	**Supply:** Penalty of 0.5% per week at the basic price of the good for undelivered quantity of supply portion, subject to a maximum of 10%. For Supply, Pre Shipment Inspection Call Letter Date (Receipt of test report) will be treated as delivery for purpose of penalty. In case PSI call given without test report, then actual date of inspection only will be considered as date of delivery for purpose of penalty calculation.
13	Penalty	For any deviation in penalty term, the offer will be liable for loading as per Clause No. G, Point No.(b) of ITB.
14	E–way bill	E–way bill to be generated by vendor before dispatch of goods as per dispatch instructions provided by BHEL.
15	Performance bank guarantee (PBG)	NOT APPLICABLE FOR THIS TENDER
16	Despatch Documents (Indigenous)	**DOCUMENTS (TRIPLICATE COPIES) REQUIRED AT THE TIME OF DISPATCH FOR PROCESSING OF BILL:** 1. FOR INDIGENOUS SCOPE OF SUPPLY: For Supply: Invoice in Triplicate, Lorry receipt (LR) copy, Packing List, PSI Call Letter Copy, Proof of delivery such as MRC (Material Receipt Certificate)/ original acknowledged LR, Insurance intimation Letter,Nil Short shipment certificate and Warranty Certificate. Note that document pertaining to Proof of delivery shall clearly mention number of boxes/panels etc which shall be in line with the Packing list.
17	Despatch Documents (Foreign)	FOR FOREIGN VENDORS:NOT APPLICABLE
18	Reverse Auction	NOT APPLICABLE
19	Other terms & conditions	For detailed Terms and Conditions, kindly refer to the following:A: ITB (document ref :SCPV: BOS: ITB – Rev 05)B: GCC (document ref: SCPV: BOS: GCC – Rev 04).Any Deviations from or additions to the "General Conditions of Contract" or "Special Conditions of Contract" require BHEL's express written consent. The General Terms of Business or Sale of the Bidder shall not apply to this tender.
20	Price Validity for placement of Purchase order.	Quotation should remain valid for a period of 90 days from the technical bid opening date for placement of Purchase order
21	Shipment	Kindly indicate the state from where the shipment will take place.
22	Bank charges (for foreign bidders only)	NOT APPLICABLE
23	DUN No. (for foreign bidders only)	NOT APPLICABLE
24	Consignment Details	Weight and Dimension of consignment with packing.
25	Freight Charges	Freight charges are under vendor scope.Included in the basic cost of Value Addition.
26	Insurance	Insurance is in BHEL scope.

27	Changes in tender condition	Any changes in the tender conditions, specification etc or in splitting ratio based on the MSE act /Make in India policy or due to any other reason, intimation will be given only to the vendors who have participated in this tender, hence it is mandatory that vendors should participate in the tender.
28	Tolerance	NOT Applicable
29	QUANTITY SPLIT BTEWEEN VENDORS	As per Quantity distribution sheet of NIT documents. The Order Quantity Share as indicated above will be procured from 03(Three) vendors in the ratio 50:30:20 at L1 matched price. If L2 does not accept L1 price, the same offer will be made to L3, L4, L5, so on. If none of the vendors agree to match L1 rate, BHEL reserves the right to order full quantity on L1 vendor or retender for balance quantity. If L3 does not accept L1 price, the same offer will be made to L4, L5, so on. If none of the vendors agree to match L1 rate, BHEL reserves the right to order L3 QTY on L1 and L2 vendor or retender for balance QTY. Any changes in splitting ratio based on the MSE act /Make in India policy or due to any other reason, intimation will be given only to the vendors who have participated in this tender, hence it is mandatory that vendors should participate in the tender.
30	INTEGRITY PACT	a) IP is a tool to ensure that activities and transactions between the Company and its Bidders/Contractors are handled in a fair, transparent and corruption free manner. A panel of Independent External Monitors (IEMs) have been appointed to oversee implementation of IP in BHEL.The IP as enclosed with the tender (total 7 sheets) is to be submitted (duly signed by authorized signatory who signs in the offer) along with technocommercial bid. Only those bidders who have entered into such an IP with BHEL would be competent to participate in the bidding. In other words, entering into this Pact would be a preliminary qualification.Details of IEM for this tender is furnished below:Sh Virendra Bahadur Singh, IPS (Retd.) and Sh. Arun Chandra Verma, IPS (Retd.)(b) Please refer Section-8 of the IP for Role and Responsibilities of IEMs. In case of any complaint arising out of the tendering process, the matter may be referred to the IEM mentioned inthe tender. No routine correspondence shall be addressed to the IEM(phone/post/email) regarding the clarifications, time extensions or any other administrative queries, etc. on the tender issued. All such clarification/issues shall be addressed directly to the tender issuing (procurement) department
31	ADDITIONAL CONDITIONS	Any vendor who has been banned by BHEL or against whom action due to non performance has been initiated by BHEL are not eligible for participation. Such offers will not be considered for evaluation and will be rejected.
32	UNLOADING	unloading at site is under BHEL scope.
33	Pre Qualification Criteria Documents Submitted	**As per PQC document in NIT.PQC documents to be uploaded under "2021_BHEL_2509_pack1_10068 " packet of the NIT** **For Fabrication capacity:** Bidder to be a manufacturer and to have in-house forming facility with minimum capacity of 150 MT per month for C or Z or any other profiles all put together. Vendor to provide the capacity proof for any 2 months within the past three years- Dec '17– Dec '20 showing minimum 150 MT each month. Or Minimum capacity of 200MT for any 1 month within the past three years Dec '17– Dec '20. Calendar months only to be considered for evaluation. To substantiate above, required documents like delivery challan or tax invoices or any relevant documents to be furnished. For Hot Dip Galvanization facility: a.) Either the bidder to have in-house galvanization facility. Or b.) Has HDG facility in one of it's sister units. Or c.) Has a tie up with another company for HDG Works. For Sl. No b.) and c.) proper documentation (Stamp paper for tie up/Documentation indicating Sister Unit) to be provided. Once a tie-up is declared during tendering time for HDG works, this tie-up cannot be changed during execution of purchase order. BHEL reserves the right to visit the vendor's , subsidiary vendor or vendor with whom tie-up is established works and demand all relevant certifications and if found unacceptable, offer is liable for rejection. **For Financial Capability:** Vendors shall furnish the solvency certificate issued by nationalized/scheduled banks for minimum worth of Rupees One crore (Rs 1 Crore), with date of issue not before 6 months from tender opening date. BHEL reserves the right to ask any other relevant documents to substantiate the above.
34	Evaluation Currency	The evaluation currency for this tender shall be INR
35	Declaration required under Rule 144(xi) of General FinancialRules, 2017 amendment dt 23.07.2020 issued by Ministry of Finance, Govt. of India.Refer Annexure–X for Restrictions under Rule 144(Xi) of General Financial Rules,2017 amendment dt:23.07.2020.	The Bidder shall mandatorily submit Declaration as per format enclosed as part of tender(ANNEXURE–A)

36	MSE status(Applicable for MSE vendors only)	Documents to be submitted for claiming MSE status: **Option 1**:submission of Udyog Aadhar Memorandum along with CA certificate as per ANNEXURE VIII of NIT.Option -01 is valid only upto 31.03.2021 after which Option-02 is mandatory. **Option 2**:Submission of Udyam Registration certificate. Latest MSE guidelines and circulars with subsequent amendments or clarifications (if any) will be applicable for this tender.Please refer NIT for MSE guidelines.
37	GST ITC	1.E–invoicing under GST is being implemented w.e.f. 1st October 2020 for all the taxable person having turnover more than Rs. 500 Crore. It has been specified by the Govt that it is mandatory to mention a valid unique Invoice reference number (IRN) and QR code as generated from Govt. portal on a Tax invoice. Based on such information, GST ITC as claimed by BHEL in GST Returns shall be matched with the corresponding details uploaded by supplied in E–invoicing system.2.In case the vendor delays or fails to provide all the documents as per the Purchase order at the time of submitting Tax invoice to BHEL, any subsequent financial loss to BHEL on account of vendor shall be to vendorâ€™s account. BHEL has further right to take necessary steps to protect its interest at the time of release of payment.
38	Special Conditions of Contract (SCC)	In addition to the ITB and GCC stipulated in the tender document, the terms and conditions indicated under techno commercial form shall be treated as "Special Conditions of Contract (SCC). In case of Conflict between General Conditions of Contract (GCC) available in Tender document and Special Conditions of Contract (SCC) stipulated under bidding forms, SCC will prevail over GCC.
39	Price Variation Clause(PVC)	Applicable as per PVC calculation write up of NIT document
40	Tax regime and introduction of Sec206C(1H) on sale of goods	Please note that with the recent changes in Tax regime and introduction of Sec206C(1H) on sale of goods witheffect from 01.10.2020 the vendors in line with the provisions of the said section are to collect TCS @0.075%from 01.10.2020 upto 31.03.2021 and 0.1% from there on Invoice value.(a).Vendor should raise /levy TCS in the Tax Invoice itself. No separate debit note will be accepted.(b).Vendor should indicate his Pan# and Tan # in the Tax invoice.(c).Vendor should remit the TCS so collected from BHEL and provide TCS certificates with invoice no., invoicedate, Amount etc. breakup details.(d).If by any chance vendor is not remitting /not able to submit TCS certificates to BHEL on time then the TCSamount with penalty if any applicable will be recovered from vendor in his available bills.
41	Preference to make in India order2017 dated 16.09.2020	Government circular for Preference to make in India order2017 dated 16.09.2020 and subsequent amendments(if any) shall be applicable for this tender.
42	NIL Deviation to the Technocommerical terms	This form to be signed with Name and seal on all the pages and to be uploaded as acceptance to technocommercial conditions. Acceptance and submission of signed technocommercial form is treated as confirmation on **"NIL DEVIATION ON TECHNO–COMMERCIAL TERMS"** indicated in the techno commercial form.Technical or Commercial Deviation if any shall be separately uploaded under "**2021_BHEL_2509_pack1_10073" packet of the NIT** Deviations indicated in any other place shall not be considered by BHEL and the same are not valid.
43	General Terms	The General Terms of Business or Sale of the Bidder shall not apply to this tender. No commercial terms to be attached, if attached it will be considered null and void.
44	Corrigendums	All corrignedums will be published in this e–procurement system(https://eprocurebhel.co.in/nicgep/app) and www.bhel.com . Vendors to keep themselves updated regularly and submit offers as required.
45	Declaration under Cartel formation	The Bidder declares that they will not enter into any illegal or undisclosed agreement or understanding, whether formal or informal with other Bidder(s). This applies in particular to prices, specifications, certifications, subsidiary contracts, submission or non-submission of bids or any other actions to restrict competitiveness or to introduce cartelization in the bidding process.In case, the Bidder is found having indulged in above activities, suitable action shall be taken by BHEL as per extant policies/ guidelines.
46	Purchase order Validity	In case of successful bidder , the rates quoted in the tender for placement of purchase order will be valid till the execution of the entire PO QTY(or) one year from date of issue of Purchase order whichever is earlier.This means the raw material prices for which PVC is applicable and Conversion cost which is fixed price will be valid for one year from date of issue of Purchase order.However, BHEL reserves the right to extend the Purchase order validity beyond one year from date of Purchase order in case necessary on mutual agreement between BHEL and vendor. BHEL reserves the right to issue manufacturing clearance of any qty and within any point of time in one year from the date of issue of Purchase order. In case, vendors are not able to execute the purchase order as stated above,BHEL reserves the right to take alternate procurement action with "RISK and COST" to vendor as per BHEL purchase policies,RISK and Cost guidelines,SEARP guidelines, Suspension of Business dealings guidelines and other policies and procedures applicable DEEMED FIT to execute the contract so that customer contract schedules, BHEL commissioning schedules are not hampered.
47	Mandatory GeM registration ID for vendor	Government E-Marketplace(GeM) registration ID of vendor is mandatory for placement of purchase order. Vendor has to register in GeM portal and inform GeM registration ID before placement of purchase order. If GeM registration ID is not provided by vendor before PO placement, vendor is not eligible for placement of purchase order.

BHEL UNIT	**EDN Bangalore**	
RFQ/NIT/Enquiry no.	**AKPBOS0022**	
Description	**Supply of MMS Super Structure for GSECL Raghanesda Phase-1 and GSECL Raghanesda Phase-2 SPV projects.**	

UNPRICE BID FORM

BHEL UNIT

VENDOR NAME (Please indicate)	M/s								
Sl. No	**Material Code**	**Description**	**Qty**	**Unit**	**WTHER QUOTED OR NOT**	**HSN/SAC CODE (Please indicate)**	**GST INDICATED (Please indicate IGST (or) SGST & CGST**	**GST% (Please indicate GST percentage applicable)**	**CURRENCY**
1	PS0679088873	MMS SUPERSTRUCTURE (BASIC VALUE ADDITION PER MT INCLUSIVE OF ALL PRICES EXCLUDING GST ,TCS AND INSURANCE)	670	MT	QUOTED				INR

Vendor to quote only BASIC VALUE ADDITION PER MT INCLUSIVE OF ALL PRICES EXCLUDING GST ,TCS AND INSURANCE. Please refer PVC calculation sheet for detailed write up on procedure for calculation of Purchase order value.

NOTE: This Unpriced Bid form to be filled and signed document to be uploaded under "2021_BHEL_2509_pack1_10073" packet of the NIT

Vendor Bid Form

(This document should be filled and signed document along with other documents called for in this form are to be uploaded under "2021_BHEL_2509_pack1_10073" packet of the NIT)

RFQ/NIT/Enquiry no.	**AKPBOS0022**	
Description	**Supply of MMS Super Structure for GSECL Raghanesda Phase-1 and GSECL Raghanesda Phase-2 SPV projects.**	
Sr. No	**DESCRIPTION**	**VENDOR TO FILL THE DETAILS**
		RESPONSE
1	VENDOR NAME	
2	OFFICE ADDRESS	
3	WORKS ADDRESS (1,2 etc if any)	
4	Order to be Placed on, Details	
5	CONTACT PERSON	
6	TELE, MOBILE NO	
7	FIRM MAIL IDs	
8	GST NO, scanned copy (mandatory document).**To be attached under "2021_BHEL_2509_pack1_10073" packet of the NIT**	
9	PAN NO, scanned copy(mandatory document)**.To be attached under "2021_BHEL_2509_pack1_10073" packet of the NIT**	
10	BANK AND BRANCH NAME	
11	BANK ACCOUNT NO	
12	MSE VENDOR / NON MSE VENDOR	
13	Vendor to submit the MSE documents as per ITB/GCC/SCC along with UAM no/Udyam Registration . In case of non−submission, vendor will be treated at par with non−MSE vendors (Mandatory document).**To be attached under "2021_BHEL_2509_pack1_10073" packet of the NIT**	
14	ORIGIN OF DISPATCH	
15	QUOTATION REFERENCE	
16	QUOTATION DATE	
17	Preference to make in India order2017 dated 16.09.2020.Submit Local content certificate as per ANNEXURE−B .**To be attached under "2021_BHEL_2509_pack1_10073" packet of the NIT**	
18	Declaration required under Rule 144(xi) of General FinancialRules, 2017 amendment dt 23.07.2020 issued by Ministry of Finance, Govt. of India.Refer Annexure−X for Restrictions under Rule 144(Xi) of General Financial Rules,2017 amendment dt:23.07.2020. **The Bidder shall mandatorily submit Declaration as per format enclosed as part of tender(ANNEXURE-A).** **To be attached under "2021_BHEL_2509_pack1_10073" packet of the NIT**	

INTEGRITY PACT

Between

Bharat Heavy Electricals Ltd. (BHEL), a company registered under the Companies Act 1956 and having its registered office at "BHEL House", Siri Fort, New Delhi – 110049 (India) hereinafter referred to as "The Principal", which expression unless repugnant to the context or meaning hereof shall include its successors or assigns of the ONE PART

and

_____, (description of the party along with address), hereinafter referred to as "The Bidder/ Contractor" which expression unless repugnant to the context or meaning hereof shall include its successors or assigns of the OTHER PART

Preamble

The Principal intends to award, under laid-down organizational procedures, contract/s for

RFQ Ref:AKPBOS0022 MMS Super Structure for GSECL Raghanesda 100MW Phase-1 and GSECL Raghanesda 100MW Phase-2 SPV Projects

_____. The Principal values full compliance with all relevant laws of the land, rules and regulations, and the principles of economic use of resources, and of fairness and transparency in its relations with its Bidder(s)/ Contractor(s).

In order to achieve these goals, the Principal will appoint Independent External Monitor(s), who will monitor the tender process and the execution of the contract for compliance with the principles mentioned above.

SRINIVAS ANAKAPALLI

Digitally signed by SRINIVAS ANAKAPALLI
DN: c=IN, o=BHARAT HEAVY ELECTRICALS LIMITED, ou=EDN-Bangalore, postalCode=560026, st=Karnataka, 2.5.4.20=57c9cc85603e60543ca9426ef8509b6c879b5f8eb607fba2574967d844aefeda, cn=SRINIVAS ANAKAPALLI
Date: 2021.02.10 11:44:52 +05'30'

Section 1 – Commitments of the Principal

1.1 The Principal commits itself to take all measures necessary to prevent corruption and to observe the following principle:-

1.1.1 No employee of the Principal, personally or through family members, will in connection with the tender for, or the execution of a contract, demand, take a promise for or accept, for self or third person, any material or immaterial benefit which the person is not legally entitled to.

1.1.2 The Principal will, during the tender process treat all Bidder(s) with equity and reason. The Principal will in particular, before and during the tender process, provide to all Bidder(s) the same information and will not provide to any Bidder(s) confidential / additional information through which the Bidder(s) could obtain an advantage in relation to the tender process or the contract execution.

1.1.3 The Principal will exclude from the process all known prejudiced persons.

1.2 If the Principal obtains information on the conduct of any of its employees which is a penal offence under the Indian Penal Code 1860 and Prevention of Corruption Act 1988 or any other statutory penal enactment, or if there be a substantive suspicion in this regard, the Principal will inform its Vigilance Office and in addition can initiate disciplinary actions.

Section 2 – Commitments of the Bidder(s)/ Contractor(s)

2.1 The Bidder(s)/ Contractor(s) commit himself to take all measures necessary to prevent corruption. He commits himself to observe the following principles during his participation in the tender process and during the contract execution.

2.1.1 The Bidder(s)/ Contractor(s) will not, directly or through any other person or firm, offer, promise or give to the Principal or to any of the Principal's employees involved in the tender process or the execution of the contract or to any third person any material, immaterial or any other benefit which he / she is not legally entitled to, in

SRINIVAS ANAKAPALLI
Digitally signed by SRINIVAS ANAKAPALLI
DN: c=IN, o=BHARAT HEAVY ELECTRICALS LIMITED, ou=EDN- Bangalore, postalCode=560026, st=Karnataka, 2.5.4.20=57c9cc85603e60543ca9426ef8509b6c879b5f8eb607fba2574967d844aefeda, cn=SRINIVAS ANAKAPALLI
Date: 2021.02.10 11:45:52 +05'30'

order to obtain in exchange any advantage of any kind whatsoever during the tender process or during the execution of the contract.

2.1.2 The Bidder(s)/ Contractor(s) will not enter with other Bidder(s) into any illegal or undisclosed agreement or understanding, whether formal or informal. This applies in particular to prices, specifications, certifications, subsidiary contracts, submission or non-submission of bids or any other actions to restrict competitiveness or to introduce cartelization in the bidding process.

2.1.3 The Bidder(s)/ Contractor(s) will not commit any penal offence under the relevant IPC/ PC Act; further the Bidder(s)/ Contractor(s) will not use improperly, for purposes of competition or personal gain, or pass on to others, any information or document provided by the Principal as part of the business relationship, regarding plans, technical proposals and business details, including information contained or transmitted electronically.

2.1.4 The Bidder(s)/ Contractor(s) will, when presenting his bid, disclose any and all payments he has made, and is committed to or intends to make to agents, brokers or any other intermediaries in connection with the award of the contract.

2.2 The Bidder(s)/ Contractor(s) will not instigate third persons to commit offences outlined above or be an accessory to such offences.

Section 3 – Disqualification from tender process and exclusion from future Contracts

If the Bidder(s)/ Contractor(s), before award or during execution has committed a transgression through a violation of Section 2 above, or acts in any other manner such as to put his reliability or credibility in question, the Principal is entitled to disqualify the Bidders(s)/ Contractor(s) from the tender process or take action as per the separate "Guidelines for Suspension of Business Dealings with Suppliers/ Contractors" framed by the Principal.

SRINIVAS ANAKAPALLI
Digitally signed by SRINIVAS ANAKAPALLI
DN: c=IN, o=BHARAT HEAVY ELECTRICALS LIMITED, ou=EDN-Bangalore, postalCode=560026, st=Karnataka, 2.5.4.20=57c9cc85603e60543ca9426ef8509b6c879b5f8eb607fba2574967d844aefeda, cn=SRINIVAS ANAKAPALLI
Date: 2021.02.10 11:46:06 +05'30'

Section 4 – Compensation for Damages

4.1 If the Principal has disqualified the Bidder(s) from the tender process prior to the award according to Section 3, the Principal is entitled to demand and recover the damages equivalent to Earnest Money Deposit/ Bid Security.

4.2 If the Principal has terminated the contract according to Section 3, or if the Principal is entitled to terminate the contract according to section 3, the Principal shall be entitled to demand and recover from the Contractor liquidated damages equivalent to 5% of the contract value or the amount equivalent to Security Deposit/Performance Bank Guarantee, whichever is higher.

Section 5 – Previous Transgression

5.1 The Bidder declares that no previous transgressions occurred in the last 3 years with any other company in any country conforming to the anti-corruption approach or with any other Public Sector Enterprise in India that could justify his exclusion from the tender process.

5.2 If the Bidder makes incorrect statement on this subject, he can be disqualified from the tender process or the contract, if already awarded, can be terminated for such reason.

Section 6 – Equal treatment of all Bidders/ Contractors/ Sub-contractors

6.1 The Bidder(s)/ Contractor(s) undertake(s) to demand from his sub-contractors a commitment consistent with this Integrity Pact. This commitment shall be taken only from those sub-contractors whose contract value is more than 20% of Bidder's/ Contractor's contract value with the Principal.

6.2 The Principal will enter into agreements with identical conditions as this one with all Bidders and Contractors.

6.3 The Principal will disqualify from the tender process all bidders who do not sign this pact or violate its provisions.

SRINIVAS ANAKAPALLI
Digitally signed by SRINIVAS ANAKAPALLI
DN: c=IN, o=BHARAT HEAVY ELECTRICALS LIMITED, ou=EDN-Bangalore, postalCode=560026, st=Karnataka, 2.5.4.20=57c9cc85603e60543ca9426ef8509b6c879b5f8eb607fba2574967d844aefeda, cn=SRINIVAS ANAKAPALLI
Date: 2021.02.10 11:46:31 +05'30'

Section 7 – Criminal Charges against violating Bidders/ Contractors /Subcontractors

If the Principal obtains knowledge of conduct of a Bidder, Contractor or Subcontractor, or of an employee or a representative or an associate of a Bidder, Contractor or Subcontractor which constitutes corruption, or if the Principal has substantive suspicion in this regard, the Principal will inform the Vigilance Office.

Section 8 –Independent External Monitor(s)

8.1 The Principal appoints competent and credible Independent External Monitor for this Pact. The task of the Monitor is to review independently and objectively, whether and to what extent the parties comply with the obligations under this agreement.

8.2 The Monitor is not subject to instructions by the representatives of the parties and performs his functions neutrally and independently. He reports to the CMD, BHEL.

8.3 The Bidder(s)/ Contractor(s) accepts that the Monitor has the right to access without restriction to all contract documentation of the Principal including that provided by the Bidder(s)/ Contractor(s). The Bidder(s)/ Contractor(s) will grant the monitor, upon his request and demonstration of a valid interest, unrestricted and unconditional access to his contract documentation. The same is applicable to Sub-contractor(s). The Monitor is under contractual obligation to treat the information and documents of the Bidder(s)/ Contractor(s) / Sub-contractor(s) with confidentiality.

8.4 The Principal will provide to the Monitor sufficient information about all meetings among the parties related to the contract provided such meetings could have an impact on the contractual relations between the Principal and the Contractor. The parties offer to the Monitor the option to participate in such meetings.

8.5 As soon as the Monitor notices, or believes to notice, a violation of this agreement, he will so inform the Management of the Principal and request the Management to discontinue or

SRINIVAS ANAKAPALLI
Digitally signed by SRINIVAS ANAKAPALLI
DN: c=IN, o=BHARAT HEAVY ELECTRICALS LIMITED, ou=EDN-Bangalore, postalCode=560026, st=Karnataka, 2.5.4.20=57c9cc85603e60543ca9426ef8509b6c879b5f8eb607fba2574967d844aefeda, cn=SRINIVAS ANAKAPALLI
Date: 2021.02.10 11:46:49 +05'30'

take corrective action, or heal the situation, or to take other relevant action. The Monitor can in this regard submit non-binding recommendations. Beyond this, the Monitor has no right to demand from the parties that they act in a specific manner, refrain from action or tolerate action.

8.6 The Monitor will submit a written report to the CMD, BHEL within 8 to 10 weeks from the date of reference or intimation to him by the Principal and, should the occasion arise, submit proposals for correcting problematic situations.

8.7 The CMD, BHEL shall decide the compensation to be paid to the Monitor and its terms and conditions.

8.8 If the Monitor has reported to the CMD, BHEL, a substantiated suspicion of an offence under relevant IPC / PC Act, and the CMD, BHEL has not, within reasonable time, taken visible action to proceed against such offence or reported it to the Vigilance Office, the Monitor may also transmit this information directly to the Central Vigilance Commissioner, Government of India.

8.9 The number of Independent External Monitor(s) shall be decided by the CMD, BHEL.

8.10 The word 'Monitor' would include both singular and plural.

Section 9 – Pact Duration

9.1 This Pact begins when both parties have legally signed it. It expires for the Contractor 12 months after the last payment under the respective contract and for all other Bidders 6 months after the contract has been awarded.

9.2 If any claim is made / lodged during this time, the same shall be binding and continue to be valid despite the lapse of this pact as specified as above, unless it is discharged/ determined by the CMD, BHEL.

SRINIVAS ANAKAPALLI

Digitally signed by SRINIVAS ANAKAPALLI
DN: c=IN, o=BHARAT HEAVY ELECTRICALS LIMITED, ou=EDN-Bangalore, postalCode=560026, st=Karnataka, 2.5.4.20=57c9cc85603e60543ca9426ef8509b6c879b5f8eb607fba2574967d844aefeda, cn=SRINIVAS ANAKAPALLI
Date: 2021.02.10 11:47:00 +05'30'

Section 10 – Other Provisions

10.1 This agreement is subject to Indian Laws and jurisdiction shall be registered office of the Principal, i.e. New Delhi.

10.2 Changes and supplements as well as termination notices need to be made in writing. Side agreements have not been made.

10.3 If the Contractor is a partnership or a consortium, this agreement must be signed by all partners or consortium members.

10.4 Should one or several provisions of this agreement turn out to be invalid, the remainder of this agreement remains valid. In this case, the parties will strive to come to an agreement to their original intentions.

10.5 Only those bidders/ contractors who have entered into this agreement with the Principal would be competent to participate in the bidding. In other words, entering into this agreement would be a preliminary qualification.

SRINIVAS ANAKAPALLI

Digitally signed by SRINIVAS ANAKAPALLI
DN: c=IN, o=BHARAT HEAVY ELECTRICALS LIMITED, ou=EDN-Bangalore, postalCode=560026, st=Karnataka, 2.5.4.20=57c9cc85603e60543ca9426ef8509b6c879b5f8eb607fba2574967d844aefada, cn=SRINIVAS ANAKAPALLI
Date: 2021.02.10 11:47:15 +05'30'

For & On behalf of the Principal
(Office Seal)

For & On behalf of the Bidder/ Contractor
(Office Seal)

Place----------
Date----------

G. PONNUGURUPACKAIM

Digitally signed by G. PONNUGURUPACKAIM
DN: c=IN, o=BHARAT HEAVY ELECTRICALS LIMITED, ou=BHEL ELECTRONICS DIVISION, postalCode=560026, st=Karnataka, 2.5.4.20=fbb489c57f34407e298bd7e75c0b79387f93aa8e6ec4267c8ead36be3fff5814, cn=G. PONNUGURUPACKAIM
Date: 2021.02.10 11:47:58 +05'30'

Witness: _____
(Name & Address)
_____

Witness: _____
(Name & Address)_____
_____

ಭಾರತ್ ಹೆವಿ ಎಲೆಕ್ಟ್ರಿಕಲ್ಸ್ ಲಿಮಿಟೆಡ್
भारत हेवी इलेक्ट्रिकल्स लिमिटेड
Bharat Heavy Electricals Limited
(A Government of India Undertaking)
ELECTRONICS DIVISION
P. B. No. 2606, Mysore Road, Bengaluru - 560 026

SCPV: BOS: ITB-Rev 05

INSTRUCTIONS TO BIDDERS

Bidder is requested to read the instructions carefully and submit their quotation taking into consideration of all the points:

A. GENERAL INSTRUCTIONS:

1. Any Purchase Order resulting from this enquiry shall be governed by the Instructions to Bidders (document reference: SCPV:BOS:ITB-Rev 05), General Conditions of Contract (document reference: SCPV: BOS: GCC-Rev 04) and Special Conditions of Contract, if any, of the enquiry.
2. Any deviations from or additions to the "General Conditions of Contract" or "Special Conditions of Contract" require BHEL's express written consent. ***The general terms of business or sale of the Bidder shall not apply to this tender.***
3. Bidders *(Also includes Term Suppliers / Contractors, wherever used in this document)* are instructed to Quote their most competitive price and best delivery etc. in the Offer. Prices should be indicated in both figures & words *(Please also refer Section-12, under Section-B).*
4. Regret letter (either through post or by mail or by EPS) indicating reasons for not quoting must be submitted without fail, in case of non-participation in this tender. Supplier shall be liable for removal as a registered vendor of BHEL when the supplier fails to quote against four consecutive tender enquiries for the same item or all enquiries in last two years for the same item, whichever is earlier.
5. Procurement directly from the manufacturers is preferred. However, if the OEM/ Principal insist on engaging the services of an agent, such agent shall not be allowed to represent more than one manufacturer/ supplier in the same tender. Moreover, either the agent could bid on behalf of the manufacturer/ supplier or the manufacturer/ supplier could bid directly but not both. Agent/Representative authorized by the OEM/Principal in turn cannot further sub authorize any other firm for submitting the offer or for placement of order.

   In case bids are received from the manufacturer/ supplier and his agent, bid received from the agent shall be ignored.
6. Consultant / firm (and any of its affiliates) shall not be eligible to participate in the tender/s for the related goods for the same project if they were engaged for consultancy services for the same project.
7. If an Indian representative/associate/liaison office quotes on behalf of a foreign based

bidder, such representative shall furnish the following documents:

(a) Authorization letter to quote and negotiate on behalf of such foreign-based bidder. (Annexure- AF)

(b) Undertaking from such foreign based bidder that such contract will be honored and executed according to agreed scope of supply and commercial terms and conditions.

(c) Undertaking shall be furnished by the Indian representative stating that the co-ordination and smooth execution of the contract and settlement of shortages/damages/replacement/repair of imported scope till the Equipment/ System is commissioned and handed over to customer will be the sole responsibility of the Indian representative/associates/agent/liaison office.

(d) Refer **Annexure I** on "Guidelines for Indian Agents".

(e) In case, The Principal manufacturer decides not to quote directly to BHEL and authorized his representative to quote, the format attached as per annexure duly signed and sealed by authorized signatory and the same shall be attached along with offer.

8. (A) In case it is specified in the SCC as the terms of delivery DDP (delivery duty paid) , FOR destination to site, door delivery at site which means material cost, insurance, customs duty, safe guard duty (SGD) or any other taxes, duties, levies etc air fright sea freight customs handling charges inland transport from port to destination to vendor account.

(B) In case of imported scope of supply, (Not Covered in clause 8 A) customs clearance & customs duty payment will be to BHEL account after the consignment is received at Indian Airport /Seaport. Bidders must provide all original documents required for completing the customs clearance along with the shipment. Warehousing charges due to incomplete or missing documentation will be to supplier's account. All offers for imported scope of supply by air, must be made from any of the gateway ports (within the country) indicated (Refer Annexure II).

9. The offers of the bidders who are on the banned list and also the offers of the bidders, who engage the services of the banned firms, shall be rejected. The list of the banned firms is available on BHEL website: http://www.bhel.com/vender_registration/vender.php

10. Business dealings with bidders will be suspended if they are found to have indulged in any malpractices/misconduct which are contrary to business ethics like bribery, corruption, fraud, pilferage, cartel formation, submission of fake/false/forged documents, certificates, information to BHEL or if they tamper with tendering procedure affecting the ordering process or fail to execute a contract, or rejection of 3 consecutive supplies or if their firms / works are under strike/lockout for a long period. Bidder may refer "Guidelines for Suspension of Business Dealings with Suppliers/ Contractors" available on www.bhel.com for more details.

11. The bidder along with its associate/collaborators/sub-contractors/sub-vendors/consultants/service providers shall strictly adhere to BHEL Fraud Prevention

Policy displayed on BHEL website http://www.bhel.com and shall immediately bring to the notice of BHEL Management about any fraud or suspected fraud as soon as it comes to your notice.

12. Offers to be submitted in English Language only.

13. For this procurement, the local content to categorize a supplier as a Class-I local supplier/ Class-II local supplier/ Non-local supplier and purchase preference to Class-I local supplier, is as defined in Public procurement (Preference to Make in India), Order 2017 dated **16.09.2020** issued by DPIIT. In case of subsequent Orders issued by the Nodal Ministry, changing the definition of local content for the items of the NIT, the same shall be applicable even if issued after issue of this NIT, but before opening of price bid/s against this NIT.

Any Indian Bidder intending to avail the benefits shall submit the requisite documents as per the aforesaid orders. The self declaration for Make in India or CA certificate for Make in India as per Annexure S/CA to be attached with the offer.

14. The Bidder shall mandatorily submit Declaration as mentioned below, under Rule 144(xi) of General Financial Rules, 2017 amendment dt 23.07.2020 issued by Ministry of Finance, Govt. of India. The declaration to be submitted on Company Letter head duly signed and sealed by authorised signatory, for ascertaining the eligibility of offer in the tender.

"I have read the clause regarding restrictions on procurement from a bidder of a country which shares a land border with India; I certify that this bidder is not from such a country or, if from such a country, has been registered with the Competent Authority. I hereby certify that this bidder fulfils all requirements in this regard and is eligible to be considered."

(Where applicable, evidence of valid registration by the Competent Authority shall be attached).

The Competent Authority for the purpose of registration under this Order shall be the Registration Committee constituted by the Department for Promotion of Industry and Internal Trade (DPIIT).

Refer Annexure-X for 'Restrictions under Rule 144(Xi) of General Financial Rules,2017 amendment dt: 23.07.2020'.

B. <u>GUIDELINES FOR PREPARATION OF OFFER:</u>

1. Quotation shall be submitted in Single Part Bid, Two Part Bid or Three Part Bid, as called for in the tender:

- **SINGLE PART BID**: Technical and Commercial Bid with prices along with price summary & filled in BHEL Standard Commercial terms and conditions in a single sealed envelope.
- **TWO PART BID**: Unpriced offer i.e. "Techno-commercial Bid" with filled in BHEL Standard Commercial terms and conditions in a sealed envelope **along with the copy of the "Price Bid" without the prices** should be enclosed in one cover and the cover must be super scribed **"Techno-commercial offer)** and Priced offer i.e.

"Price Bid" containing price summary in a separate sealed envelope and must be super scribed **"Price Bid"**. Both these envelopes shall be enclosed in a single sealed envelope superscribed with enquiry number, due date of tender and any other details as called for in the tender document.

- **THREE PART BID**: Pre-qualification Bid (Part-I), Techno Commercial Bid with filled in BHEL Standard Commercial terms and conditions (Part-II), and Price Bid (Part-III). All three envelopes shall be enclosed in a single sealed envelope superscribed with enquiry number, due date of tender and any other details as called for in the tender document.

If any of the offers (Part I, Part II or Part III) are not submitted before the due date and time of submission (or) if any part of the offer is incomplete, the entire offer of the bidder will be rejected.

2. Supplier shall ensure to superscribe each envelope with RFQ number, RFQ Date, RFQ Due date and time, Item Description and Project clearly & boldly. Also mention on the envelope whether it is "Techno Commercial Bid" or "Price Bid" or "Pre-Qualification Bid". Please ensure complete address, department name and purchase executive name is mentioned on the envelope (before dropping in the tender box or handing over) so that the tender is available in time for bid opening.

3. BHEL standard Commercial Terms and Conditions (duly filled, signed & stamped) must accompany Technical-Commercial offer without fail and should be submitted in original only.

The above indicated submission of Offers in "sealed envelope/hard copy" as mentioned in points B.1-B.3 is applicable for tenders that are not floated through E-Procurement System (EPS).

4. Validity: Unless otherwise specified in SCC (special commercial conditions of contract), the offer will be valid for a period of 90 days from the date of part-I bid opening and in case of Negotiation/Counter-offer/Reverse Auction, price validity will apply afresh for a period of 60 days from the date of according final price by bidder (or) upto original validity period, whichever is later.

5. Any of the terms and conditions not acceptable to supplier, shall be explicitly mentioned in the Techno-Commercial Bid. If no deviations are brought out in the offer it will be treated as if all terms and conditions of this enquiry are accepted by the supplier without deviation.

6. Deviation to this specification/item description, if any, shall be brought out clearly indicating "DEVIATION TO BHEL SPECIFICATION" without fail, as a part of Techno-Commercial Bid. If no deviations are brought out in the offer it will be treated as if the entire specification of this enquiry is accepted without deviation.

7. Suppliers shall submit one set of original catalogue, datasheets, bill of materials,

dimensional drawings, mounting details and/or any other relevant documents called in purchase specification as part of Technical Bid. Approximate Packing dimension to be indicated in offer_(L)_ft x_(B)__ft x _(H)_ft, in case of ODC Load. Consignment beyond the dimension _(L)40_ft x_(B)8_ft x _(H)8_ft to be indicated in Offer.

8. "Price Bid" shall be complete in all respects containing price break-up of all components along with all applicable taxes and duties, Packing and forwarding charges, freight charges (if applicable) etc. Once submitted, **NO** modification / addition / deletion will be allowed in the "Price Bid." Bidders are advised to thoroughly check the unit price, total price to avoid any discrepancy.

9. In addition, bidder shall also quote for erection & commissioning charges/erection supervision & commissioning charges (E&C service charges), documentation charges, testing Charges (type & routine), training charges etc. as applicable along with corresponding tax. The price summary must indicate all the elements clearly.

10. Wherever applicable, bidders should indicate "Lumpsum" Erection and Commissioning (or) Erection Supervision and Commissioning charges, as applicable (including To & Fro Fare, Boarding, Lodging, Local Conveyance etc.) for carrying out E&C activity and further handing over to customer. The quotation shall clearly indicate scope of work, likely duration of commissioning, pre-commissioning checklist (if any).

11. Wherever bidders require PAC (Project Authority Certificate)/applicable certificates for import of raw materials, components required for MNRE,DECC, EPCG Power Projects, Export Projects or other similar projects wherein supplies are eligible for customs duty benefits, lists and quantities of such items and their values (CIF) has to be mentioned in the offer. Prices must be quoted taking into account of such benefits.

12. Prices should be indicated in both figures & words**.** Bid should be free from correction/overwriting, using corrective fluid, etc. Any interlineation, cutting, erasure or overwriting shall be valid only if they are attested under full signature(s) of person(s) signing the bid else bid will be rejected. Any typographical error, totalling mistakes, currency mistake, multiplication mistake, summing mistakes etc. observed in the price bids will be evaluated as per **Annexure III** "Guidelines for dealing with Discrepancy in Words & Figures – quoted in price bid" and BHEL decision will be final.

13. Documents submitted with the offer shall be signed and stamped in each page by authorized representative of the bidder. However, scanned copy to be attached in E-Procurement System (EPS).

C. GUIDELINES FOR OFFER SUBMISSION:

The under-mentioned clauses 1, 2 & 3 will not be applicable for EPS tenders.

1. Offers / Quotations must be dropped in tender box before 13.00 Hrs. on or before due date mentioned in RFQ. The offers are to be dropped in the proper slot of the Tender Box kept in our reception area with caption "CE, SC&PV, DEFENCE". Tenders

are opened on 3 days in a week (Monday/Wednesday/Friday). Tender must be deposited in the slot corresponding to the day (Monday - Box no.4/Wednesday - Box no. 6 /Friday - Box no.8) while depositing the offer.

2. E-Mail/ Internet/EDI offers received in time shall be considered only when such offers are complete in all respects. In case of offers received through E-mail, please send the offer to the email ID specified in the SCC document of the tender.

3. Offers of Vendors who already have a valid Technical/Commercial MOU with BHEL-EDN for the items of the RFQ shall mention the relevant MOU reference no. and give only such other details not covered in the MOU.

4. In cases where tender documents are bulky, or due to some reasons tender documents are required to be submitted by hand or through posts/couriers, the offers are to be handed over either of the two purchase officers whose names are mentioned in the SCC document of tender RFQ.

5. Tenders will be opened on due date, time and venue as indicated in the RFQ in the presence of bidders at the venue indicated in the RFQ. For EPS tenders, e-mail notifications will be automatically generated and forwarded to registered e-mail ID/s of bidders during opening of tenders.

6. Bidder will be solely responsible:

(a) For submission of offers before due date and time. Offers submitted after due date and time will be treated as "Late offers" and will be rejected.

(b) For submission of offers in the correct compartment of the tender box based on the day of due date (Monday/Wednesday/Friday). Please check before dropping your offer in the correct tender box.

(c) For depositing offers in proper sealed condition in the tender box. If the bidder drops the tender in the wrong tender box (or) if the tender document is handed over to the wrong person, BHEL will not be responsible for any such delays.

(d) For offers received through email etc., suppliers are fully responsible for lack of secrecy on information and ensuring timely receipt of such offers in the tender box before due date & time (This clause will not be applicable for EPS tenders).

The above indicated submission of Offers as mentioned in points 6(a) to 6(d) is applicable for tenders that are not floated through EPS.

(e) In case of e-tender, all required documents should be uploaded before due date and time. Availability of power, internet connections, system/software requirements etc. will be the sole responsibility of the bidder. Wherever assistance is needed for submission of e-tenders, help-line numbers as available in the web-site of service provider of BHEL may be contacted.

Purchase Executive/ BHEL shall not be responsible for any of the activities relating to submission of offer.

D. <u>PROCESSING OF OFFERS RECEIVED:</u>

1. Any discount/ revised offer submitted by the supplier on its own shall be accepted provided it is received on or before the due date and time of offer submission (i.e.

Part-I bid). The discount shall be applied on pro-rata basis to all items unless specified otherwise by the bidder.

2. Changes in offers or Revised offers given after Part-I bid opening shall not be considered as a part of the original offer unless such changes/revisions are requested by BHEL. In case of withdrawal of any Technical/Commercial deviation(s) by the bidder before opening of price bids/conducting the Reverse Auction, revision of price/impact bid will not be accepted.

3. In case there is no change in the technical scope and/ or specifications and/ or commercial terms & conditions, the supplier will not be allowed to change any of their bids after Technical bids are opened (after the due date and time of tender opening).

4. In case of changes in scope and/ or technical specifications and/ or commercial terms & conditions by BHEL and it accounts for price implications from bidders, all techno-commercially acceptable bidders shall be asked by BHEL (after freezing the scope, technical specifications and commercial terms & conditions) to submit the impact of such changes on their price bid. Impact price will be applicable only for changes in technical specification / commercial conditions by BHEL. The impact price must be submitted on or before the cut-off date specified by BHEL and the original price bid and the price impact bid will be opened together at the time of price bid opening Impact price means only for those which have been impacted by addition/deletion/changes n the technical specification or commercial conditions. The impact may be +/- incremental value of the currency in which originally quoted.

5. Un-opened bids (including price bids) will be returned to the respective bidders after release of Purchase order and order acknowledgement. Regarding Offers for EPS tenders that get rejected on PQC/ techno-commercial grounds, the bids for the subsequent parts will not be opened i.e., both technical bid and price bid (Parts-II & III) will not be opened in case of rejection on PQC ground and price bid (Part-II/Part-III, as applicable) will not be opened in case of rejection on techno-commercial ground.

6. After receipt of Purchase Order, supplier should submit required documents viz., specified drawings, bill of materials, datasheets, catalogues, quality plan, test procedure, type test report, O & M Manuals and/or any other relevant documents as per Specification/Purchase Order, as and when required by BHEL/Customer.

7. Any deviation to the terms and conditions not mentioned in the quotation by supplier in response to this enquiry will not be considered, if put forth subsequently or after issue of Purchase Order, unless clarification is sought for by BHEL and agreed upon in the Purchase Order.

8. Evaluation shall be on the basis of delivered cost (i.e. “Total Cost to BHEL"), as per RFQ terms.
<u>“Total Cost to BHEL”</u> shall include total basic cost, packing & forwarding charges, taxes and/or duties (as applicable), freight charges, taxes on Services, customs clearance charges for imported items, any other cost indicated by bidder for

execution of the contract and loading factors (for non-compliance to BHEL Standard Commercial Terms & Conditions). Benefits arising out of Nil Import Duty on DEEC, EPCG, MNRE projects, DFIA Projects, Physical Exports or such 100% exemptions (statutory benefits), project imports, customer reimbursements of statutory duties (like Basic Customs Duty and cess on customs duty), Input tax credits as applicable will also be taken into account for arriving at the Total cost to BHEL (wherever applicable and as indicated in SCC document of tender).

For EPS tenders, it shall be noted that the prices (including discounts) vis-a-vis currency quoted in EPS portal only will be considered as Final for the purpose of evaluation of the lowest bidder. Bidder shall ensure to indicate the applicable taxes against each line item in online portal, failing to which the same will be considered as inclusive/NIL.

In the course of evaluation, if more than one bidder happens to occupy L-1 status, effective L-1 will be decided by soliciting discounts from the respective L-1 bidders.
Incase more than one bidder happens to occupy the L-1 status even after soliciting discounts, the L-1 bidder shall be decided by a toss/draw of lots, in the presence of the respective L-1 bidder(s) or their representative(s).
Ranking will be done accordingly. BHEL's decision in such situations shall be final and binding.

9. For evaluation of offers in foreign currency, the exchange rate (TT selling rate of SBI) shall be taken as under:

Single part bids	:	Date of tender opening
Two/three part bids	:	Date of Part-I bid opening
Reverse Auction	:	Date of Part-I bid opening

In case of Performance Bank Guarantee (PBG) also, exchange rate will be considered as mentioned above for converting foreign currency to Indian currency and vice versa.

If the relevant day happens to be a bank holiday, then the exchange rate as on the previous working day of the bank (SBI) shall be taken.

10. Ranking (L-1, L-2 etc.) shall be done only for the techno-commercially acceptable offers and on basic of Evaluation of Total Cost to BHEL.

E. <u>INFORMATION ON PAYMENT TERMS:</u>

1. All payments will be through Electronic Fund transfer (EFT). Vendor has to furnish necessary details as per BHEL standard format **(Refer Annexure IV)** for receiving all payments through NEFT.(Applicable for Indian vendors only).

2. In case of High Sea Sales transaction, customs clearance of the consignment landed on Indian Sea/Air ports will be done by BHEL based on the original HSS documents provided by vendors. All warehousing charges due to delay in submission of complete and or correct HSS documents to BHEL will be to supplier's account only. Such recovery will be made out of any of the available bills **(Refer Annexure V)**.

3. Statutory deductions, if any, will be made and the deduction certificate shall be

issued.

A. In case vendor does not provide PAN details, the TDS deduction shall be at the maximum percentage stipulated as per the provisions of Income Tax Act.

   In addition to the above, Foreign vendors shall also submit relevant details of their bankers like Swift Code, Banker's Name &Address etc.

B. TDS deduction as per section 51 of CGST Act,2017 shall be applicable as per Gazette Notification No. 50/2018-Central Tax, Dated: 13th September 2018 and subsequent notification/s, as and when released by Govt. authorities.

4. Incomplete documentation will not be accepted. Delayed submission of invoice / documents may result in corresponding delay in payment. In this connection, request to also refer clause: G about invoicing & payment formalities under GST regime. Applicable documents shall be submitted to the purchaser at the time of execution of supplies/services for availing GST input credits.

F. STANDARD PAYMENT TERMS OF BHEL-EDN:

PURCHASE ORDERS FOR:	**SUPPLY WITH SERVICE(S)**	**SUPPLY ONLY**
INDIGENOUS PROCUREMENT	a. 80% of basic supply value+100% taxes and freight charges will be pad with 45 days credit from the receipt of material at site or 15 days credit from the date of submission of complete set of documentation whichever is later. b. 10% of basic supply value will be paid on completion of I&C against submission of supplementary invoice with proof of completion of I&C along with I&C charges (if Any) c. Balance 10% (retention money) against submission of supplementary invoice along with PBG valid for Warranty Period+ 3 months clam period from BHEL Consortium Bank **d.I&C/Supervision:** 100% on completion of I&C/Supervision and certification line tem wise on prorata basis with 15 days credit from the date of submission of complete set of documentation **e.O&M:** 100% O&M Charges are payable as per RFQ terms against report certified by BHEL with 15 days credit from the date of submission of complete set of documentation	f. 100% of PO value with taxes and freight will be paid in 45 days from the date of dispatch or 15 days from the date of submission of complete set of documentation, whichever is later+ submission of PBG valid for warranty period +3 months claim period from BHEL consortium bank if applicable.

	Note: In case PBG is not furnished, only 90% payment will be released against 100% claim without the consent of Vendor. This 10% basic amount withheld towards PBG will be paid either against submission of supplementary invoice & Original PBG (or) against supplementary invoice without PBG after expiry of Warranty period.	
IMPORT PROCUREMENT	g. 80% of basic supply value(excluding I&C charges) will be paid will be paid with 45 days credit against sight draft from the date of AWB/BOL on submission of complete set of documents as n PO. h. 10% of basic supply value will be paid on completion of I&C against submission of supplementary invoice with proof of completion of I&C along with I&C charges (if Any) i. Balance 10% (retention money) against submission of supplementary invoice along with PBG valid for Warranty Period+ 3 months clam period from BHEL Consortium Bank Note: In case PBG is not furnished, only 90% payment will be released against 100% claim without the consent of Vendor. This 10% basic amount withheld towards PBG will be paid either against submission of supplementary invoice & Original PBG (or) against supplementary invoice without PBG after expiry of Warranty period.	j. 100% of PO value will be paid against sight draft with 45 days credit from the date of dispatch or 15 days credit from the date of submission of complete set of documents whichever is later + submission of PBG valid for Warranty period + 3months claim period from BHEL consortium bank if applicable.
HIGH-SEA SALES PROCUREMENT	k. 100% of basic value will be paid in 45 days from the date of signing of High Sea Sale agreement or 15 days from the date of submission of complete set of documentation, whichever is later Note: In case PBG is not furnished, only 90% payment will be released against 100% claim without the consent of Vendor. This 10% basic amount withheld towards PBG will be paid either against submission of supplementary invoice & Original PBG (or) against supplementary invoice without PBG after expiry of Warranty period.	l. 100% of basic value will be paid in 45 days from the date of signing of High Sea Sale agreement or 15 days from the date of submission of complete set of documentation, whichever is later.

1. **Erection and Commissioning:**

   Evaluation methodology: Unless and otherwise specified in SCC, E&C charges should not be less than 10% of the main supply value. In case the quoted total E&C value is less than 10% of the main supply value, BHEL shall evaluate Bidders Price deducting differential amount from main supply price proportionally from all items and apportioning towards E&C charges.

   Payment term: 100% E&C charges along with tax as applicable, will be paid in 15 days credit from the date of submission of supplementary invoice/documents against proof of completion of E&C.

2. **Erection Supervision and Commissioning:**

   Evaluation methodology: Unless and otherwise specified in SCC, E&C charges should not be less than 5% of the main supply value. In case the quoted total E&C value is less than 5% of the main supply value, BHEL shall evaluate Bidders Price deducting differential amount from main supply price proportionally from all items and apportioning towards E&C charges.

   Payment term: 100% E&C charges along with tax as applicable, will be paid in 15 days from the date of submission of supplementary invoice/documents against proof of completion of E&C.

3. **Comprehensive Annual Maintenance Contract:**

   Evaluation methodology: Unless and otherwise specified in SCC, CAMC will be applicable for a period of 04 years from the date of expiry of warranty period (or) from the date of completion of commissioning of equipment, whichever is later and the total CAMC value should not be less than 20% of the main supply value. In case the quoted total CAMC value is less than 20% of the main supply value, BHEL shall evaluate Bidders Price deducting differential amount from main supply price proportionally from all items and apportioning towards CAMC charges.

   Payment terms: 100% CAMC charges along with tax as applicable, will be paid in 15 days from the date of submission of supplementary invoice/documents against proof of completion of CAMC on quarterly basis.

4. **Terms of Payment for Training:** 100% payment will be made in 45 days from the date of completion of Training or 15 days from the date of submission of complete set of invoice along with documentary evidence, whichever is later.

LOADING FACTORS FOR DEVIATION IN PAYMENT TERMS (APPLICABLE FOR IMPORT PROCUREMENT ONLY):

(i) For offers received with Sight draft payment term in place of Usance draft, loading applicable will be 1.0% of basic value.

(ii) For offers received with Letter of Credit payment term with Usance of 45 days, loading applicable will be 2.5% of basic value.

Additional loading of 2% will be applicable for payment term as Letter of Credit at Sight.

5. Any payment term with credit period of less than 45 days for indigenous supply/HSS and any other variation of payment terms are liable for rejection.
6. Standard payment terms indicated in Clauses**: F (a), (b), (c), (d), (e), (f), (g), (h), (i) & (j) ,(k),(l) will** not attract any loading.

Note 1: Basic value of Purchase Order mentioned above will include all components of the purchase order and will exclude only taxes, duties, freight, training charges, E&C and AMC charges (wherever applicable). Wherever the Purchase Order is split into import portion and indigenous portion of supply, minimum % to be quoted for Services, wherever mentioned, will be of both purchase order values put together.

Note 2: In case of multiple packages/units in a power plant, payment of E&C charges will be processed on pro-rata basis.

Note 3: No deviation will be permitted from the duration of Guarantee/Warranty and/or Comprehensive Annual Maintenance Contract period specified in SCC.

G. <u>Terms & Conditions to be complied under GST regime</u>:

1. All invoices to contain BHEL-EDN (buyer) GSTIN number: 29AAACB4146P1ZB. However, for CGST +SGST/UGST billing outside the state of Karnataka, invoice has to be generated with BHEL's Nodal Agency GSTIN number. Address of Nodal Agency along with GSTIN number will be provided by BHEL at the time of issuing dispatch clearance.
2. The Bidder shall mention Bidder's GSTIN number in all quotations and Invoices submitted.
3. The Bidder shall also mention HSN (Harmonized System of Nomenclature) / SAC (Services Accounting Code) mandatorily in all quotations and invoices submitted.
4. Invoice submitted should be in the format as specified under GST Laws viz., all details as mentioned in Invoice Rules like GST registration number(GSTIN), invoice number with date of issue, quantity, rate, value, taxes with nomenclature – CGST, SGST, UGST, IGST mentioned separately, HSN Code / SAC Code etc. Invoice should be submitted in original for buyer plus duplicate for credit availment.
5. Payment of GST to Vendor will be made only if it is matching with data uploaded by the Vendor in GST portal.
6. For invoices paid on Reverse charge basis – "Tax payable on reverse charge basis" to be mentioned on the invoice.
7. In case GST credit is delayed/denied to BHEL due to non/delayed receipt of goods and/or tax invoice or expiry of timeline prescribed in GST law for availing such ITC, or any other reasons not attributable to BHEL, GST amount will be recoverable from vendor along with interest levied/ leviable on BHEL.
8. In case vendor delays declaring such invoice in his return and GST credit availed by BHEL is denied or reversed subsequently as per GST law, GST amount paid by BHEL

towards such ITC reversal as per GST law will be recoverable from vendor/contractor along with interest levied/ leviable on BHEL.

9. Vendor should intimate BHEL immediately on the same date of invoicing without any delay.

10. In case of discrepancy in the data uploaded by supplier in the GSTN portal or in case of any shortages or rejection in the supply, then BHEL will not be able to avail the tax credit and will notify the supplier of the same. Supplier has to rectify the data discrepancy in the GSTN portal or issue credit note (details to be uploaded in GSTN portal) for the shortages or rejections in the supplies, within the calendar month notified by BHEL.

11. Bidders to note that Rules & Regulations pertaining to E-way bill system are to be strictly adhered to, as and when notified by Govt. authorities.

H. Performance bank guarantee (PBG):

Performance bank guarantee (PBG) will be applicable as called in the tender documents. Unless otherwise specified in the SCC, the PBG against performance of the contract shall be valid for a period of 24 months from the date of dispatch of goods + claim period of 03 months, for a value equal to 10 % of the basic value of the purchase order which will include all components of the purchase order and will exclude only taxes, duties, freight, training charges, E&C and AMC charges (wherever applicable).

1. The BG issued in Indian Rupees by Banks in India is to be executed on Non-Judicial Stamp paper/e-stamp paper of appropriate value as per Stamp Act prevailing in the State(s) where the BG is submitted or is to be acted upon or the rate prevailing in the State where the BG was executed, whichever is higher. The Stamp Paper/e-stamp paper shall be purchased in the name of Vendor/Bank issuing the guarantee.

2. No deviation for the duration and value of PBG will be permitted.

3. PBG shall be from any of the BHEL consortium of bankers **(refer Annexure VI)**.

4. PBGs from nationalized banks are also acceptable.

5. PBG should be sent directly by the bank to the dealing executive mentioned in the purchase order located at the address mentioned in the purchase order.

6. PBG should be in the format specified **(refer Annexure VII)**. No deviation to this format will be allowed. However, in case BHEL changes the PBG format, bidder shall honor the same.

7. Bank Guarantee should be enforceable in Bangalore.

8. In Case of Bank Guarantees submitted by Foreign Vendors-

a. From Nationalized/Public Sector / Private Sector/ Foreign Banks (BG issued by Branches in India) can be accepted subject to the condition that the Bank Guarantee should be enforceable in Bangalore.

b. From Foreign Banks (wherein Foreign Vendors intend to provide BG from local branch of the Vendor Country's Bank)

b.1 Please note that Bank Guarantee issued by any of the Consortium Banks only will be accepted by BHEL. As such, Foreign Vendor needs to make necessary arrangements for issuance of Counter- Guarantee by Foreign Bank in favor of the Indian Bank's (BHEL's Consortium Bank) branch in India. It shall be noted that all charges for issuance of Bank Guarantee/ counter- Guarantee should be borne by the Foreign Vendor.

b.2 In case, Foreign Vendors intend to provide BG from Overseas Branch of our Consortium Bank (e.g. if a BG is to be issued by SBI Frankfurt), the same is acceptable. However, the procedure at sl.no. b.1 is required to be followed.

b.3 The BG issued may preferably be subject to Uniform Rules for Demand Guarantees (URDG) 758 (as amended from time to time).

9. Expired PBGs will be returned only after expiry of the claim period.

10. PBG shall not be applicable for spares.

I. PROVISONS APPLICABLE FOR MSE VENDORS (MICRO AND SMALL ENTERPRISES) :

Benefits/facilities as applicable for Micro and Small Enterprises (MSEs) shall be available to MSEs registered with Government designated authorities as per the Purchase & Price Preference Policy of the Government subject to them becoming eligible otherwise.

Vendors who qualify as MSE vendors are requested to submit applicable certificates (as specified by the Ministry of Micro, Small and Medium Enterprises) at the time of vendor registration. Vendors have to submit the Udyog Aadhaar Memorandum (UAM) /UDYAM Registration certificate along with attested copy of a CA certificate (Annexure VIII) applicable for the relevant financial year (latest audited) along with the tender documents in the Part-I bid to avail the applicable benefits.

Date to be reckoned for determining the deemed validity will be the date of bid opening (Part-I in case of two-part bid and three-part bid).

Documents have to be notarized/attested by a Gazetted officer and must be valid as on the date of part I bid opening for the vendors to be eligible for the benefits applicable for MSE vendors. Please note that no benefit shall be applicable if any deficiency in the above required documents are not submitted before the price bid opening/Reverse Auction. If the tender is to be submitted through e-procurement portal, then the above required documents are to be uploaded on the portal.

Bidders to however note the documents that shall be furnished in order to establish credentials as MSE vendor should be as per the extant statutory requirements specified by the Ministry of Micro, Small and Medium Enterprises.

PURCHASE PREFERENCE FOR MSE VENDORS:

MSE vendors quoting within a price band of L1 + 15% shall be allowed to supply up to 25% of the requirement against this tender provided

1. The MSE vendor matches the L1 price.
2. L1 price is from a non MSE vendor.
3. L1 price will be offered to the vendor nearest to L1 in terms of price ranking (L2 - nearest to L1). In case of non-acceptance by the MSE vendor (L2), next ranking

MSE vendor will be offered who is within the L1 + 15% band (if L3 is also within 15% band).

4. 3% of the 25% will be earmarked for women owned MSEs.

5. 25% of the 25% (i.e., 6.25% of the total enquired quantity) will be earmarked for SC/ST owned MSE firms provided conditions as mentioned in (1) & (2) are fulfilled.

6. In case where no SC/ST category firms are meeting the conditions mentioned in (1) and (2) or have not participated in the tender, the 6.25% of earmarked quantity for SC/ST owned MSE firms will be distributed among the other eligible MSE vendors who have participated in the tender.

7. In case after the bid opening it is seen that no MSE has become L1, then depending on the nature of the item, if it is not possible to split the tendered items/quantities on account of reasons like customer contract requirements of supplying one make for a given project or technical reasons like the tendered item being a system etc., then BHEL would not counter offer the L1 prices even though there may be MSE bidders within the +15% band of L1. Such information that tendered quantity will not be split shall be indicated in the SCC.

J. <u>INTEGRITY COMMITMENT IN THE TENDER PROCESS, AND EXECUTION OF CONTRACTS</u>:

1. <u>Commitment by BHEL:</u> BHEL commits to take all measures necessary to prevent corruption in connection with the Tender process and execution of the Contract. BHEL will, during the tender process, treat all bidder / suppliers in a transparent and fair manner, and with equity.

2. <u>Commitment by Bidder(s)/ Contractor(s):</u>

a. The Bidder(s)/ Contractor(s) commit(s) to take all measures to prevent corruption and will not directly or indirectly try to influence any decision or benefit which he is not legally entitled to.

b. The Bidder(s)/ Contractor(s) will not enter with other Bidder(s) into any undisclosed agreement or understanding or any actions to restrict competition.

c. The Bidder(s)/ Contractor(s) will not commit any offence under the relevant Acts. The Bidder(s)/ Contractor(s) will not use improperly, for purposes of competition or personal gain or pass on to others, any information or document provided by BHEL as part of business relationship.

d. The Bidder(s)/ Contractor(s) will, when presenting his bid, disclose any and all payments he has made, and is committed to or intends to make to agents, brokers or any other intermediaries in connection with the award of the contract and shall adhere to the relevant guidelines issued from time to time by Government of India/ BHEL.

If the Bidder(s) / Contractor(s), before award or during execution of the Contract commit(s) a transgression of the above or in any other manner such as to put his reliability or credibility in question, BHEL is entitled to disqualify the Bidder(s) / Contractor (s) from the tender process or terminate the contract and/ or take suitable action as deemed fit.

K. Integrity Pact (IP):

a) IP is a tool to ensure that activities and transactions between the Company and its Bidders/ Contractors are handled in a fair, transparent and corruption free manner.
A panel of independent External Monitors (IEMs) have been appointed to oversee implementation of IP in BHEL.
The IP as enclosed with the tender is to be submitted (duly signed by authorized signatory who signs in the offer) along with techno-commercial bid. Only those Bidders who have entered into such an IP with BHEL would be competent to participate in the bidding. In other words, entering into this Pact would be a preliminary qualification.

b) Please refer Section-8 of the IP for Role and Responsibilities of IEMs (Annexure IX). In case of any complaint arising out of the tendering process, the matter may be referred to the IEM mentioned in the tender.

Note: No routine correspondence shall be addressed to the IEM (phone/ post/ email) regarding the clarifications, time extensions or any other administrative queries, etc. on the tender issued. All such clarification/ issues shall be addressed directly to the tender issuing (procurement) department."

L. Fraud prevention policy:

The Bidder along with its associates/collaborators/sub-contractors/sub-vendors/consultants/service providers shall strictly adhere to BHEL Fraud Prevention Policy displayed on BHEL Website http://www.bhel.com and shall immediately bring to the notice of BHEL Management about any fraud or suspected fraud as soon as it comes to their notice. Fraud prevention policy and List of Nodal Officers shall be hosted on BHEL website, vendor portal of Units/Region intranet.

Annexure

Annexure I

Guidelines for Indian Agents

- **Definition of Indian Agent**: An Indian Agent of foreign prinicipal is an individual, a partnership, an association of persons, a private or pubile company, that carries our specific obligation(s) towards processing of BHEL tender or finalization or execution of BHEL's contract on behalf of the foreign supplier.

In case of yes, vendor to note the following and reply accordingly:

i. BHEL shall deal directly with foreign vendors, wherever required, for procurement of goods. However, if the foreign principal desires to avail of the services of an Indian agent, then the foreign principal should ensure compliance to regulatory guidelines - which require mandatory submission of an Agency Agreement.

ii. It shall be incumbent on the Indian agent and the foreign principal to adhere to the relevant guidelines of Government of India, issued from time to time.

iii. The Agency Agreement should specify the precise relationship between the foreign OEM / foreign principal and their Indian agent and their mutual interest in the business. All services to be rendered by agent/ associate, whether of general nature or in relation to the particular contract, must be clearly stated by the foreign supplier/ Indian agent. Any payment, which the agent or associate receives in India or abroad from the OEM, whether as commission or as a general retainer fee should be brought on record in the Agreement and be made explicit in order to ensure compliance to laws of the country.

iv. Any agency commission to be paid by BHEL to the Indian agent shall be in Indian currency only.

v. Tax deduction at source is applicable to the agency commission paid to the Indian agent as per the prevailing rules.

vi. In the absence of any agency agreement, BHEL shall not deal with any Indian agent (authorized representatives / associate / consultant, or by whatever name called) and shall deal directly with the foreign principal only for all correspondence and business purposes.

vii. The "Guidelines for Indian Agents of Foreign Suppliers" enclosed at annexure –'A' shall apply in all such cases.

viii. The supply and execution of the Purchase Order (including indigenous supplies/ service) shall be in the scope of the OEM/ foreign principal. The OEM/ foreign principal should submit their offer inclusive of all indigenous supplies/ services and evaluation will be based on 'total cost to BHEL'. In case OEM/ foreign principal recommends placement of order(s) towards indigenous portion of supplies/ services on Indian supplier(s)/ agent on their behalf, the credentials/ capacity/ capability of the Indian supplier(s)/ agent to make the supplies/ services shall be checked by BHEL as per the extant guidelines of Supplier Evaluation, Approval & Review Procedure (SEARP), before opening of price bids. In this regard, details may be checked as per Annexure-B (copy enclosed). It will be the responsibility of the OEM/ foreign principal to get acquainted with the evaluation requirements of Indian supplier/ agent as per SEARP available on www.bhel.com.

The responsibility for successful execution of the contract (including indigenous supplies/ services) lies with the OEM/ foreign principal. All bank guarantees to this effect shall be in the scope of the OEM/ foreign principal.

---x---

Vendor's Signature with Seal

Annexure-A

Guidelines for Indian Agents of Foreign Suppliers

1.0 There shall be compulsory registration of agents for all Global (Open) Tender and Limited Tender. An agent who is not registered with BHEL shall apply for registration in the registration form in line with SEARP.

1.1 Registered agents will file an authenticated Photostat copy duly attested by a Notary Public/Original certificate of the Principal confirming the agency agreement and giving the status being enjoyed by the agent and the commission/ remuneration/ salary/ retainership being paid by the principal to the agent before the placement of order by BHEL.

1.2 Wherever the Indian representatives have communicated on behalf of their principals and the foreign parties have stated that they are not paying any commission to the Indian agents, and the Indian representative is working on the basis of salary or as retainer, a written declaration to this effect should be submitted by the party (i.e. Principal) before finalizing the order.

2.0 Disclosure of particulars of agents/ representatives in India, if any.

2.1 Tenderers of Foreign nationality shall furnish the following details in their offers:

2.1.1 The Bidder(s)/ Contractor(s) of foreign origin shall disclose the name and address of the agents/ representatives in India if any and the extent of authorization and authority given to commit the Principals. In case the agent/ representative be a foreign Company, it shall be confirmed whether it is existing Company and details of the same shall be furnished.

2.1.2 The amount of commission/ remuneration included in the quoted price(s) for such agents/ representatives in India.

2.1.3 Confirmation of the Tenderer that the commission/ remuneration, if any, payable to his agents/ representatives in India, may be paid by BHEL in Indian Rupees only.

2.2 Tenderers of Indian Nationality shall furnish the following details in their offers:

2.2.1 The Bidder(s)/ Contractor(s) of Indian Nationality shall furnish the name and address of the foreign principals, if any, indicating their nationality as well as their status, i.e. whether manufacturer or agents of manufacturer holding the Letter of Authority of the Principal specifically authorizing the agent to make an offer in India in response to tender either directly or through the agents/ representatives.

2.2.2 The amount of commission/ remuneration included in the price (s) quoted by the Tenderer for himself.

2.2.3 Confirmation of the foreign principals of the Tenderer that the commission/ remuneration, if any, reserved for the Tenderer in the quoted price(s), may be paid by BHEL in India in equivalent Indian Rupees on satisfactory completion of the Project or supplies of Stores and Spares in case of operation items.

2.3 In either case, in the event of contract materializing, the terms of payment will provide for payment of the commission/ remuneration, if any payable to the agents/ representatives in India in Indian Rupees on expiry of 90 days after the discharge of the obligations under the contract.

2.4 Failure to furnish correct and detailed information as called for in paragraph 2.0 above will render the concerned tender liable to rejection or in the event of a contract materializing, the same liable to termination by BHEL. Besides this there would be a penalty of banning business dealings with BHEL or damage or payment of a named sum.

—x—

ANNEXURE - II
LIST OF INTERNATIONAL GATEWAY AIRPORTS

For air based consignment, terms of delivery will be on FCA basis from following listed airports only. Vendors are requested to verify this list for use before submission of offer.

SCHEDULE NO	COUNTRY	CURRENCY CODE	AIRPORT
D01	UK	GBP	LONDON (HEATHROW)
D02	UK	GBP	NEW CASTLE
D03	UK	GBP	OXFORD. CHETLAM
D04	UK	GBP	BRISTOL. WELLINGBOROUGH
D05	UK	GBP	BIRMINGHAM
DO6	UK	GBP	EAST MIDLANDS
D07	UK	GBP	MANCHESTER
D08	UK	GBP	LEEDS
D09	UK	GBP	GLASGOW
D10	FRANCE	EURO	PARIS (ROISSY) & LYON
D11	SWEDEN	EURO	STOCKHOLM
D12	SWEDEN	EURO	GOTHENBERG & MALMO
D13	ITALY	EURO	ROMA, MILAN
D14	ITALY	EURO	TURIN, BOLOGNA, FLORENCE
D15	NETHERLANDS	EURO	AMSTERDAM, ROTTERDAM
D16	AUSTRIA	EURO	VIENNA, LINZ, GRAZ
D17	BELGIUM	EURO	ANTWERP, BRUSSELS
D18	DENMARK	DKK	COPENHAGEN
D19	JAPAN	JPY	TOKYO, OSAKA
D20	SINGAPORE	SGD	SINGAPORE
D21	CANADA	CAD	TORONTO
D22	CANADA	CAD	MONTREAL
D23	USA	USD	NEW YORK, BOSTON
D24	USA	USD	CHICAGO
D25	USA	USD	SAN FRANCISCO, LOS ANGELES
D26	USA	USD	ALANTA, HOUSTON
D27	GERMANY	EURO	MUNICH, KOLN, DUSSELDORF, HANNOVER, HAMBURG, STUTTGART, DAMSTADT, MANIHIEM, NURUMBERG
D28	GERMANY	EURO	FRANKFURT
D29	GERMANY	EURO	BERLIN
D30	SWITZERLAND	SFR	BASLE, ZURICH, GENEVA
D31	SPAIN	EURO	BARCELONA
D32	AUSTRALIA	AUD	SYDNEY
D33	AUSTRALIA	AUD	MELBOURNE
D34	AUSTRALIA	AUD	PERTH
D35	CZECH	EURO	PRAGUE
D36	HONG KONG	HKD	HONG KONG
D37	NEW ZELAND	NZD	AUCKLAND
D38	RUSSIA	USD	MOSCOW
D39	SOUTH KOREA	USD	KIMPO INTERNATIONAL, INCHEON
D40	FINLAND	EURO	HELSINKI
D41	ROMANIA	EURO	BUCHAREST
D42	NORWAY	EURO	OSLO
D43	IRELAND	EURO	DUBLIN
D44	ISRAEL	USD	TEL AVIV
D45	UAE	USD	DUBAI
D46	OMAN	USD	MUSCAT
D47	EGYPT	USD	CAIRO
D48	TAIWAN	USD	TAIPEI
D49	UKRAINE	USD	KIEV
D50	CHINA	USD	SHANGHAI, SHENZHEN
D51	PHILIPINES	USD	MANILA
D52	MALAYSIA	USD	KUALALUMPUR, PE NANG
D53	CYPRUS	USD	LARNACA
D54	SOUTH AFRICA	USD	JOHANNESBERG, DURBAN
D55	SLOVAKIA	EURO	BARTISLOVA
D56	SAUDI ARABIA	SAR	RIYADH
D57	TURKEY	EURO	ISTANBUL
D58	THAILAND	USD	BANGKOK
D59	BRAZIL	USD	SAO PAULO, RIO DE JANEIRO

ANNEXURE – III

DISCREPANCY IN WORDS & FIGURES – QUOTED IN PRICE BID

Following guidelines will be followed in case of discrepancy in words & figures-quoted in price bid:

(a) If, in the price structure quoted for the required goods/services/works, there is discrepancy between the unit price and the total price (which is obtained by multiplying the unit price by the quantity), the unit price shall prevail and the total price corrected accordingly, unless in the opinion of the purchaser there is an obvious misplacement of the decimal point in the unit price, in which case the total price as quoted shall govern and the unit price corrected accordingly.

(b) If there is an error in a total corresponding to the addition or subtraction of subtotals, the subtotals shall prevail and the total shall be corrected; and

(c) If there is a discrepancy between words and figures, the amount in words shall prevail, unless the amount expressed in words is related to an arithmetic error, in which case the amount in figures shall prevail subject to (a) and (b) above.

(d) If there is such discrepancy in an offer, the same shall be conveyed to the bidder with target date upto which the bidder has to send his acceptance on the above lines and if the bidder does not agree to the decision of the purchaser, the bid is liable to be ignored.

ANNEXURE - IV

Electronic Funds Transfer (EFT) OR Paylink Direct Credit Form

Please Fill up the form in **CAPITAL LETTERS** only.
TYPE OF REQUEST(Tick one): _____ CREATE _____ CHANGE

BHEL Vendor / Supplier Code:
Company Name :
Permanent Account Number(PAN):
Address

City: PINCODE STATE

Contact Person(s)
Telephone No:
Fax No:
e-mail id:

1 Bank Name:
2 Bank Address:

3 Bank Telephone No:
4 Bank Account No:
5 Account Type: Savings/Cash Credit
6 9 Digit Code Number of Bank and branch appearing on MICR cheque issued by Bank
7 Bank IFSC Code(applicable for NEFT)
8 Bank IFSC code(applicable for RTGS) (Indian Financial System Code)

A I hereby certify that the particulars given above are true, correct and complete and that I, as a representative for the above named Company, hereby authorise BHEL, EDN, Bangalore to electronically deposit payments to the designated bank account.
B If the transaction is delayed or not effected at all for reasons of incomplete or incorrect information, I would not hold BHEL / transfering Bank responsible.
C This authority remains in full force until BHEL, EDN,Bangalore receives written notification requesting a change or cancellation.
D I have read the contents of the covering letter and agree to discharge the responsibility expected of me as a participant under ECS / EFT.

Date:

Authorised Signatory:
Designation: Telephone No. with STD Code

Company Seal

Bank Certificate

We certify that_____has an Account No_____ with us and we confirm that the bank details given above are correct as per our records.

Date: (.....)
Place: Signature

Please return completed form **along with a blank cancelled cheque or photocopy** thereof to:
Bharath Heavy Electricals Ltd,
Attn:
Electronics Division, Mysore Road,
BANGALORE - 560 026
In case of any Querry, please call concerned purchase executive.

ANNEXURE - V

PRESENT PROCEDURE FOR SALE IN TRANSIT (HIGH SEA SALES)

In case of High Sea Sales, vendor should submit following documents:

1. **ORIGINAL HIGH SEA SALES AGREEMENT**
   - Sale agreement (on Rs. 200/- non-judicial stamp paper & notarised with 2 witnesses with identity) has to be signed between BHEL and the Party importing material. The date of the sale documents should be in between the date of House Air Way Bill / Bill of Lading and before landing of the goods in Indian origin.
   - Following shall be included in the High Sea Sales Agreement:
     "THE BUYER ALSO UNDERTAKE DISCHARGES, THE OBLIGATION AND FULFILLMENT OF CONDITIONS, IF ANY, ATTACHED TO THE IMPORTATION, ASSESSMENT AND CLEARANCE OF THE GOODS IN TERMS CUSTOMS TARIFF ACT 1975, THE CUSTOMS ACT 1962 & RULES & REGULATIONS MADE THERE UNDER AND OTHER RELEVANT ACTS, ORDERS, NOTIFICATIONS".

2. **ORIGINAL INVOICES: INDIGENOUS RUPEE INVOICE & FOREIGN CURRENCY INVOICE**
   - Prices should be C.I.F., designated airport/seaport basis.
   - I.E.C., C.S.T., K.S.T. Nos. to be mentioned.
   - Description of item (Nomenclature), Unit & Quantity in both the Foreign Currency & the Indigenous Invoice in Rupee shall be exactly as per Purchase Order Description of item, Quantity and Unit. The Indigenous Invoice value shall be exactly as per Purchase Order value.
   - Seller should give Foreign Currency Invoice from the original consignor. The Foreign Currency Invoice value should be at least 2% (two per cent) less than the Indigenous Rupee Invoice value in equivalent foreign currency.

4. **ORIGINAL HOUSE AIR WAY BILL/ BILL OF LADING**
   - The sale agents should duly endorse House Air Way Bill (HAWB) for air shipments or original Bill of Lading (O.B.L.) for sea shipments and Foreign Currency Invoice in favour of BHEL-EDN.

5. **ORIGINAL CARGO ARRIVAL NOTICE FROM FORWARDER.**

6. **ORIGINAL DELIVERY ORDER ISSUED IN NAME OF BHEL-EDN.**

7. **ORIGINAL PACKING LIST.**

8. **A LETTER TO THE COMMISSIONER OF CUSTOMS FOR EFFECTING ABOVE SALE.**

9. **A LETTER TO THE DEPUTY ASSESSOR (OCTROI) FOR EFFECTING ABOVE SALE IN FAVOUR OF BHEL.**

REMARKS: In case vendor needs any clarifications on the above, the same may be sought in writing.

ELECTRONICS DIVISION, BANGALORE

Annexure-VI

BHEL MEMBER BANKS (LIST OF CONSORTIUM BANKS)

Bank Guarantee (BG) shall be issued from the following banks only:

Sl. No.	Nationalised Banks	Sl. No.	Public Sector Banks
1	Allahabad Bank	18	IDBI
2	Andhra Bank		
3	Bank of Baroda	Sl. No.	**Foreign Banks**
4	Canara Bank	19	CITI Bank N.A
5	Corporation Bank	20	Deutsche Bank AG
6	Central Bank	21	The Hongkong and Shanghai Banking Corporation Ltd. (HSBC)
7	Indian Bank	22	Standard Chartered Bank
8	Indian Overseas Bank	23	J P Morgan
9	Oriental Bank of Commerce		
10	Punjab National Bank	**Sl. No.**	**Private Banks**
11	Punjab & Sindh Bank	24	Axis Bank
12	State Bank of India	25	The Federal Bank Limited
13	Syndicate Bank	26	HDFC Bank
14	UCO Bank	27	Kotak Mahindra Bank Ltd
15	Union Bank of India	28	ICICI Bank
16	United Bank of India	29	IndusInd Bank
17	Vijaya Bank	30	Yes Bank

Note:

- All BGs must be issued from BHEL consortium banks listed above.
- This list is subject to changes. Hence vendors are requested to check this list every time before issuing BGs.
- Bank Guarantees issued by Co-operative Banks/Financial Institutions cannot be accepted under any circumstance.

Annexure-VII

BANK GUARANTEE FOR PERFORMANCE SECURITY

Bank Guarantee No:

Date:

To

NAME

& ADDRESSES OF THE BENEFICIARY

Dear Sirs,

In consideration of Bharat Heavy Electricals Limited (hereinafter referred to as the 'Employer' which expression shall unless repugnant to the context or meaning thereof, include its successors and permitted assigns) incorporated under the Companies Act, 1956 and having its registered office at _____[1] through its Unit at.....(name of the Unit) having awarded to (Name of the Vendor / Contractor / Supplier) with its registered office at_____[2] hereinafter referred to as the ' Vendor / Contractor / Supplier ', which expression shall unless repugnant to the context or meaning thereof, include its successors and permitted assigns), a contract Ref No.....dated .....[3] valued at Rs.....[4] (Rupees ----------)/FC.....(in words.....) for .....[5] (hereinafter called the 'Contract') and the Vendor / Contractor / Supplier having agreed to provide a Contract Performance Bank Guarantee, equivalent to .....% (.... Percent) of the said value of the Contract to the Employer for the faithful performance of the Contract,

we, ..., (hereinafter referred to as the Bank), having registered/Head office at ..... and inter alia a branch at ..... being the Guarantor under this Guarantee, hereby, irrevocably and unconditionally undertake to forthwith and immediately pay to the Employer any sum or sums upto a maximum amount of Rs -- ---------- [6] (Rupees ----------) without any demur, immediately on first demand from the Employer and without any reservation, protest, and recourse and without the Employer needing to prove or demonstrate reasons for its such demand.

Any such demand made on the Bank shall be conclusive as regards the amount due and payable by the Bank under this guarantee. However, our liability under this guarantee shall be restricted to an amount not exceeding Rs. _____.

We undertake to pay to the Employer any money so demanded notwithstanding any dispute or disputes raised by the Vendor / Contractor / Supplier in any suit or proceeding pending before any Court or Tribunal, Arbitrator or any other authority, our liability under this present being absolute and unequivocal.

The payment so made by us under this Guarantee shall be a valid discharge of our liability for payment thereunder and the Vendor / Contractor / Supplier shall have no claim against us for making such payment.

We the .....bank further agree that the guarantee herein contained shall remain in full force and effect during the period that would be taken for the performance of the said Contract/satisfactory completion of the performance guarantee period as per the terms of the Contract and that it shall continue to be enforceable till

all the dues of the Employer under or by virtue of the said Contract have been fully paid and its claims satisfied or discharged.

We .....BANK further agree with the Employer that the Employer shall have the fullest liberty without our consent and without affecting in any manner our obligations hereunder to vary any of the terms and conditions of the said Contract or to extend time of performance by the said Vendor / Contractor / Supplier from time to time or to postpone for any time or from time to time any of the powers exercisable by the Employer against the said Vendor / Contractor / Supplier and to forbear or enforce any of the terms and conditions relating to the said Contract and we shall not be relieved from our liability by reason of any such variation, or extension being granted to the said Vendor / Contractor / Supplier or for any forbearance, act or omission on the part of the Employer or any indulgence by the Employer to the said Vendor / Contractor / Supplier or by any such matter or thing whatsoever which under the law relating to sureties would but for this provision have effect of so relieving us.

The Bank also agrees that the Employer at its option shall be entitled to enforce this Guarantee against the Bank as a principal debtor, in the first instance without proceeding against the Vendor / Contractor / Supplier and notwithstanding any security or other guarantee that the Employer may have in relation to the Vendor / Contractor / Supplier 's liabilities.

This Guarantee shall remain in force upto and including..... [7] and shall be extended from time to time for such period as may be desired by Employer.

This Guarantee shall not be determined or affected by liquidation or winding up, dissolution or change of constitution or insolvency of the Vendor / Contractor / Supplier but shall in all respects and for all purposes be binding and operative until payment of all money payable to the Employer in terms thereof.

Unless a demand or claim under this guarantee is made on us in writing on or before the .....[8]we shall be discharged from all liabilities under this guarantee thereafter.

We, ... BANK lastly undertake not to revoke this guarantee during its currency except with the previous consent of the Employer in writing.

Notwithstanding anything to the contrary contained hereinabove:

a) The liability of the Bank under this Guarantee shall not exceed..... [6]
b) This Guarantee shall be valid up to .....[7]
c) Unless the Bank is served a written claim or demand on or before _____[8] all rights under this guarantee shall be forfeited and the Bank shall be relieved and discharged from all liabilities under this guarantee irrespective of whether or not the original bank guarantee is returned to the Bank.

We, _____ Bank, have power to issue this Guarantee under law and the undersigned as a duly authorized person has full powers to sign this Guarantee on behalf of the Bank.

For and on behalf of
(Name of the Bank)

Dated.....

Place of Issue.....

[1] *NAME AND ADDRESS OF EMPLOYER I.e Bharat Heavy Electricals Limited*

[2] *NAME AND ADDRESS OF THE VENDOR /CONTRACTOR / SUPPLIER.*

[3] *DETAILS ABOUT THE NOTICE OF AWARD/CONTRACT REFERENCE*

[4] *CONTRACT VALUE*

[5] *PROJECT/SUPPLY DETAILS*

[6] *BG AMOUNT IN FIGURES AND WORDS*

[7] *VALIDITY DATE*

[8] *DATE OF EXPIRY OF CLAIM PERIOD*

Annexure – VIII
(Applicable only for MSE Suppliers)

Certificate by Chartered Accountant on letterhead

This is to certify that M/s. _____ (hereinafter referred to as 'enterprise') having PAN Number _____and UDYAM Registration Number _____, registered office at _____ is falling under the category _____ (**Micro / Small / Medium**) under MSMED Act 2006. (Copy of UDYAM Registration Certificate to be enclosed).

The said classification of _____ (**Micro / Small / Medium**) is arrived at based on the Notifications / guidelines / clarifications issued under Micro, Small and Medium Enterprises Development Act, 2006 including the notification S.O.2119 (E) dated 26th June 2020.

The Investment of the enterprise in Plant and Machinery or Equipment as at 31st March'2020 as per Clause - 4 of the Notification is _____ (Rupees in Lakhs).

The turnover of the Enterprise for the period ending 31st March 2020 as per Clause - 5 of the Notification is _____ (Rupees in Lakhs).

Date:

(Signature) Name-
Membership number-

Seal of Chartered Accountant with UDIN reference

Annexure-X

Restrictions under Rule 144(xi) of General Financial Rules, 2017 amendment dt: 23.07.2020

I. Any bidder from a country which shares a land border with India will be eligible to bid in this tender only if the bidder is registered with the Competent Authority.

II. "Bidder" (including the term 'tenderer', 'consultant' or 'service provider' in certain contexts) means any person or firm or company, including any member of a consortium or joint venture (that is an association of several persons, or firms or companies), every artificial juridical person not falling in any of the descriptions of bidders stated hereinbefore, including any agency branch or office controlled by such person, participating in a procurement process.

III. "Bidder from a country which shares a land border with India" for the purpose of this Order means :-

a. An entity incorporated, established or registered in such a country; or

b. A subsidiary of an entity incorporated, established or registered in such a country; or

c. An entity substantially controlled through entities incorporated, established or registered in such a country; or

d. An entity whose *beneficial owner* is situated in such a country; or

e. An Indian (or other) agent of such an entity; or

f. A natural person who is a citizen of such a country; or

g. A consortium or joint venture where any member of the consortium or joint venture falls under any of the above

IV. The *beneficial owner* for the purpose of (iii) above will be as under:

1. In case of a company or Limited Liability Partnership, the beneficial owner is the natural person(s), who, whether acting alone or together, or through one or more juridical person, has a controlling ownership interest or who exercises control through other means.

Explanation--

a. "Controlling ownership interest" means ownership of or entitlement to more than twenty-five per cent of shares or capital or profits of the company;

b. "Control" shall include the right to appoint majority of the directors or to control the management or policy decisions including by virtue of their shareholding or management rights or shareholders agreements or voting agreements;

2. In case of a partnership firm, the beneficial owner is the natural person(s) who, whether acting alone or together, or through one or more juridical person, has ownership of entitlement to more than fifteen percent of capital or profits of the partnership;

3. In case of an unincorporated association or body of individuals, the beneficial owner is the natural person(s), who, whether acting alone or together, or through one or more juridical person, has ownership of or entitlement to more than fifteen percent of the property or capital or profits of such association or body of individuals;

4. Where no natural person is identified under (1) or (2) or (3) above, the beneficial owner is the relevant natural person who holds the position of senior managing official;

5. In case of a trust, the identification of beneficial owner(s) shall include identification of the author of the trust, the trustee, the beneficiaries with fifteen percent or more interest in the trust and any other natural person exercising ultimate effective control over the trust through a chain of control or ownership.

V. An Agent is a person employed to do any act for another, or to represent another in dealings with third person.

ಭಾರತ್ ಹೆವಿ ಎಲೆಕ್ಟ್ರಿಕಲ್ಸ್ ಲಿಮಿಟೆಡ್
भारत हेवी इलेक्ट्रिकल्स लिमिटेड
Bharat Heavy Electricals Limited
(A Government of India Undertaking)
ELECTRONICS DIVISION
P. B. No. 2606, Mysore Road, Bengaluru - 560 026

SCPV: BOS: GCC- Rev 04

GENERAL COMMERCIAL CONDITIONS FOR CONTRACT

These 'General Commercial Conditions for Contract for Purchase' herein after referred to as GCC apply to all enquiries, tenders, requests for quotations, orders, contracts and agreements concerning the supply of goods and the rendering of related services (hereinafter referred to as "deliveries") to Bharat Heavy Electricals Limited and any of its units, regions or divisions (hereinafter referred to as "BHEL" or the Purchaser) or its projects/ customers.

Any deviations from or additions to these GCC require BHEL's express written consent. **The general terms of business or sale of the vendor shall not apply to BHEL**. Acceptance, receipt of shipments or services or effecting payment shall not mean that the general terms of business or sale of the vendor have been accepted.

Orders, agreements and amendments thereto shall be binding if made or confirmed by BHEL in writing. Only the Purchasing department of BHEL is authorized to issue the Purchase Order or any amendment thereof.

Definitions:

Throughout these conditions and in the specifications, the following terms shall have the meanings assigned to them, unless the subject matter or the context requires otherwise.

(a) 'The Purchaser' means Bharat Heavy Electricals Limited, Electronics division, Mysore road, Bangalore 560 026, a Unit of Bharat Heavy Electricals Limited (A Govt. of India Undertaking) incorporated under the Companies Act having its registered office at BHEL House, Siri Fort, New Delhi-110049, India and shall be deemed to include its successors and assigns. It may also be referred to as BHEL.

(b) 'The vendor' means the person, firm, company or organization on whom the Purchase Order is placed and shall be deemed to include the vendor's successors, representative heirs, executors and administrator as the case may be. It may also be referred to as Seller, Contractor or Supplier.

(c) 'Contract' shall mean and include the Purchase Order incorporating various agreements, viz. tender/ RFQ, offer, letter of intent/acceptance/ award, the General Conditions of Contract and Special Conditions of Contract for Purchase, Specifications, Inspection/ Quality Plan, Schedule of Prices and Quantities, Drawings, if any enclosed or to be provided by BHEL or his authorized nominee and the samples or patterns if any to be provided under the provisions of the contract.

(d) 'Parties to the Contract' shall mean the 'The Vendor' and the Purchaser as named in the main body of the Purchase Order.

Order of Precedence:

In case of any inconsistency or contradiction between any of the documents, the order of precedence shall be Purchase Order, LOI / LOA, Special Conditions of Contract and General Conditions of Contract for commercial conditions; and specific agreement on technical conditions, RFQ/offer and specification for Technical Conditions.

Interpretation:

In the contract, except where the context requires otherwise:

(a) Words indicating one gender include all genders;
(b) Words indicating the singular also include the plural and words indicating the plural also include the singular;
(c) Provisions including the word "agree", "agreed" or "agreement" require the agreement to be recorded in writing, and
(d) "Written" or "in writing" means hand-written, type-written, printed or electronically made, and resulting in a permanent record.

APPLICABLE CONDITIONS:

1. **Price Basis:** All prices shall be firm until the purchase order is executed / completed in all respects. No price variations / escalation shall be permitted, unless otherwise such variations/ escalations are permitted for and agreed up on by BHEL in writing in the PO. In case Price variation/ Exchange rate variation clause if applicable, the same will be mentioned in Special Conditions of Contract (SCC), otherwise firm price only.

2. **Ordering and confirmation of Order:** Vendor shall send the order acceptance on their company letter head/ through e-mail within 1 (ONE) week from the date of receipt of Purchase Order or such other period as specified/ agreed by BHEL. BHEL reserves the right to revoke the order placed if the order confirmation differs from the original order placed. The acceptance of goods/services/supplies by BHEL as well as payments made in this regard shall not imply acceptance of any deviations.

   The purchase order will be deemed to have been accepted if no communication to the contrary is received within 1 (ONE) week (or the time limit as specified/agreed by BHEL) from the date of receipt of the purchase order.

3. **Documentation:** After receipt of Purchase Order, vendor should submit necessary documents (if & as applicable) like drawings specified, bill of materials, datasheets, catalogues, quality plan, test procedure, type test report, O & M Manuals and/or any other relevant documents as per Specification/Purchase Order, as and when required by BHEL/Customer.

   At any stage within the contract period, the vendor shall notify of any error, fault or other defect found in BHEL's documents /specifications or any other items for reference. If and to the extent that (taking account of cost and time) any vendor exercising due care would have discovered the error, fault or other defect when examining the documents/specifications before submitting the tender, the time for completion shall not be extended. However, if errors, omissions, ambiguities,

inconsistencies, inadequacies or other defects are found in the vendor's documents, they shall be corrected at his cost, notwithstanding any consent or approval.

4. **Penalty:**

For delay in delivery: In the event of delay in agreed contractual delivery as per Purchase Order, penalty @ 0.5 % (half percent) per week or part thereof but limited to a max of 10% (ten percent) value of undelivered portion (basic material cost) will be applicable. Delivery will commence from the date of issue of Manufacturing clearance along with approved document. The date for which Inspection call is issued by vendor along with test certificates / test reports /Certificate of Conformance / calibration reports, as proof of completion of manufacturing will be treated as date of deemed delivery for penalty calculation. In the absence of furnishing such document indicated above as proof of completion of manufacturing along with inspection call, actual date of inspection will be considered as date of deemed delivery and BHEL will not be responsible for delay in actual date of inspection.

Penalty for delayed delivery if applicable, shall be deducted at the time of first supply payment.

If penalty is applicable for duration of less than a week, penalty @ 0.5% (half percent) of the basic material value will be deducted. **GST as applicable will be recovered along with penalty amount.**

5. **Contract variations (Increase or decrease in the scope of supply):** BHEL may vary the contracted scope as per requirements at site. If vendor is of the opinion that the variation has an effect on the agreed price or delivery period, BHEL shall be informed of this immediately in writing along with technical details. Where unit rates are available in the Contract, the same shall be the basis for such additional work. Vendor shall not perform additional work before BHEL has issued written instructions/ amendment to the Purchase Order to that effect. The work which the vendor should have or could have anticipated in terms of delivering the service(s) and functionality (i.e.) as described in this agreement, or which is considered to be the result of an attributable error on the vendor's part, shall not be considered additional work.

6. **Pre Shipment Inspection:** Prior written notice of at least 10 days shall be given along with internal test certificates/Certificate of Conformance (COC) and applicable test certificates. Materials will be inspected by BHEL-EDN-QS/CQS or BHEL nominated Third Party Inspection Agency (TPIA) or BHEL authorized Inspection Agency or Customer / Consultant or jointly by BHEL & Customer / consultant. All tests have to be conducted as applicable in line with approved Quality plan or QA Checklist or Purchase specification and original reports shall be furnished to BHEL-EDN, Bangalore for verification/acceptance for issue of dispatch clearance. **BHEL reserves the right for conducting repeat test, if required.**

All costs related to inspections & re-inspections shall be borne by vendor. Whether the Contract provides for tests on the premises of the vendor or any of his Sub-contractor/s, vendor shall be responsible to provide such assistance, labour, materials, electricity, fuels, stores, apparatus, instruments as may be required and as may be reasonably demanded to carry out such tests efficiently. Cost of any type test or such

other special tests shall be borne by BHEL only if specifically agreed to in the purchase order.

7. **Transit Insurance:** Transit insurance coverage between vendor's works and project site shall be to the account of BHEL, unless specifically agreed otherwise. However, vendor shall send intimation directly to insurance agency *(as mentioned in dispatch instructions issued by BHEL)* through fax/courier/e-mail, immediately on dispatch of goods for covering insurance. A copy of such intimation sent by vendor to insurance agency shall be given to BHEL along with dispatch documents *(Email communication to Insurance Agency must be "CC" to BHEL)*. Dispatch documents will be treated as incomplete without such intimation copy. BHEL shall not be responsible for sending intimations to insurance agency on behalf of the vendor.

8. **Mode of dispatch:**

   Indigenous Scope: By road on Door Delivery Consignee Copy attached basis through your approved transporter (unless otherwise indicated in Dispatch Instructions), only on receipt of Despatch Clearance from BHEL.

   Imported Scope: By Air/Sea through BHEL approved Freight Forwarder/supplier approved Consolidator respectively as per agreed contractual terms, only on receipt of Dispatch Clearance from BHEL.

9. **Changes in Statutory levies:**

   If any rates of Tax are increased or decreased, a new Tax is introduced, an existing Tax is abolished, or any change in interpretation or application of any Tax occurs in the course of the execution of Contract, which was or will be assessed on the bidder in connection with performance of the Contract, an equitable adjustment of the Contract Price shall be made to fully take into account any such change by addition to the Contract Price or deduction there from, as the case may be. However, these adjustments would be restricted to direct transactions between BHEL and the bidder /agent of foreign bidder (if applicable). These adjustments shall not be applicable on procurement of raw materials, intermediary components etc. by the bidder /agent.

10. **Availing duty/tax exemption benefits by bidder, wherever applicable:** BHEL shall issue the required Certificate/s, as per relevant policies of the Govt. of India, to facilitate the bidders to avail any such benefits under the Contract. In case of failure of the bidders to receive the benefits partly or fully from the Govt. of India and/or in case of any delay in receipt of such benefits, BHEL shall neither be liable nor responsible in any manner whatsoever.

11. **Taxes against sub-vendor dispatches:** All taxes/levies, as applicable in respect of all components, equipment and material to be dispatched directly from the sub-vendor's works to Site irrespective of the fact whether such taxes and levies are assessable and chargeable on Vendor or the BHEL, shall be to the vendor's account and no separate claim in this regard will be entertained by BHEL.

12. **High Sea Sales (HSS):** Customs clearance of the consignment landed on Indian Sea/Air ports will be done by BHEL based on the original HSS documents provided by vendors.

    Any delay in submission of complete/correct HSS documents to BHEL may incur demurrage charges. All demurrage charges on account of incomplete /incorrect HSS

documents submission by vendor will be to vendor's account and all such charges will be recovered from any of the available vendor bills with BHEL.

13. **Packaging and dispatch:** The Seller shall package the goods safely and carefully and pack them suitably in all respects considering the peculiarity of the material for normal safe transport by Sea/ Air / Rail/ Road to its destination suitably protected against loss, damage, corrosion in transit and the effect of tropical salt laden atmosphere. The packages shall be provided with fixtures/ hooks and sling marks as may be required for easy and safe handling. If any consignment needs special handling instruction, the same shall be clearly marked with standard symbols / instructions. Hazardous material should be notified as such and their packing, transportation and other protection must conform to relevant regulations.

The packing, shipping, storage and processing of the goods must comply with the prevailing legislation and regulations concerning safety, the environment and working conditions. Any Imported/Physical Exports items packed with raw/ solid wood packing material should be treated as per ISPM – 15 (fumigation) and accompanied by Phytosanitory / Fumigation certificate. If safety information sheets (MSDS – Material Safety Data Sheet) exist for an item or the packaging, vendor must provide this information without fail along with the consignment.

Each package must be marked with Consignee name, Purchase order number, Package number, Gross weight and net weight, dimensions (L x B x H) and Seller's name. Packing list of goods inside each package with PO item number and quantity must also be fixed securely outside the box to indicate the contents of each box. Total number of packages in the consignment must also be indicated in the packing list.

Separate packing & identification of items should be as follows.

(a) Main Scope - All items must be tagged with part no. & item description.
(b) Commissioning accessories/spares - All items must be tagged with part no. & item description.
(c) Mandatory spares - All items must be tagged with part no. & item description.

Nevertheless, vendor shall adhere to dispatch & packing instructions issued by BHEL at the time of dispatch. Approximate Package Dimension shall be indicated in Offer/Quotation _____L (ft) x ___B (ft) x ___H (ft). Any Over Dimensional Consignment (ODC) in any consignment dimension ___40__L (ft) x __8_B (ft) x __8_H (ft) the same shall be indicated in offer.

14. **Assignment of Rights & Obligations; Subcontracting:** Vendor is not permitted to subcontract the delivery or any part thereof to third party or to assign the rights and obligations resulting from this agreement in whole or in part to third parties without prior written permission from BHEL. Any permission or approval given by the BHEL shall, however, not absolve the vendor of the responsibility of his obligations under the Contract.

15. **Progress report:** Vendor shall render such report as to the progress of work and in such form as may be called for by the concerned purchase officer from time to time. The submission and acceptance of such reports shall not prejudice the rights of BHEL in any manner.

16. **Non-disclosure and Information Obligations:** Vendor shall provide with all necessary information pertaining to the goods as it could be of importance to BHEL. Vendor shall not reveal any specified confidential information that may be divulged by BHEL to Vendor's employees not involved with the tender/ contract & its execution and delivery or to third parties, unless BHEL has agreed to this in writing beforehand. Vendor shall not be entitled to use the BHEL name in advertisements and other commercial publications without prior written permission from BHEL.

17. **Cancellation /Termination of contract:** BHEL shall have the right to completely or partially terminate the agreement by means of written notice to that effect. Termination of the Contract, for whatever reason, shall be without prejudice to the rights of the parties accrued under the Contract up to the time of termination.

    BHEL shall have the right to cancel/foreclose the Order/ Contract, wholly or in part, in case it is constrained to do so on account of any decline, diminution, curtailment or stoppage of the business.

18. **Risk Purchase Clause:** In case of failure of supplier, BHEL at its discretion may make purchase of the materials / services not supplied / rendered in time at the RISK & COST of the supplier. Under such situation, the supplier who fails to supply the goods in time shall be wholly liable to make good to BHEL any loss due to risk purchase.

    In case of items demanding services at site like erection and commissioning, vendor should send his servicemen/representatives within 7 days from the service call. In case a vendor fails to attend to the service call, BHEL at its discretion may also make arrangements to attend such service by other parties at the **RISK & COST** of the supplier. Under such situation the supplier who fails to attend the service shall be wholly liable to make good to BHEL any loss due to risk purchase/service including additional handling charges due to the change.

19. **Shortages:** In the event of shortage on receipt of goods and/or on opening of packages at site, all such shortages, *caused by supplier's act or omission*, shall be made good at *free of cost* within a reasonable time that BHEL may allow from such intimation.

    Transit Damages: In the event of receipt of goods in damaged condition or having found them so upon opening of packages at site, supplier shall make good of all such damages within a reasonable time from such intimation by BHEL. *In case BHEL raises an insurance claim, the cost of material limited to insurance settled amount less handling charges will be reimbursed to supplier.*

20. **Remedial work:** Notwithstanding any previous test or certification, BHEL may instruct the vendor to remove and replace materials/goods or remove and re-execute works/services which are not in accordance with the purchase order. Similarly, BHEL may ask the vendor to supply materials or to execute any services which are urgently required for any safety reasons, whether arising out of or because of an accident, unforeseeable event or otherwise. In such an event, Vendor shall provide such services within a reasonable time as specified by BHEL.

21. **Indemnity Clause:** Vendor shall comply with all applicable safety regulations and take care for the safety of all persons involved. Vendor is fully responsible for the safety of its personnel or that of his subcontractor's men / property, during execution of the

Purchase Order and related services. All statutory payments including PF, ESI or other related charges have to be borne by the vendor. Vendor is fully responsible for ensuring that all legal compliances are followed in course of such employment.

22. **Product Information, Drawings and Documents:** All specified drawings, technical documents or other technical information received by Vendor from BHEL or vice versa shall not, without the consent of the other party, be used for any other purpose than that for which they were provided. They may not, without the consent of the Disclosing party, otherwise be used or copied, reproduced, transmitted or communicated to third parties. All information and data contained in general product documentation, whether in electronic or any other form, are binding only to the extent that they are by reference expressly included in the contract.

Vendor, as per agreed date/s but not later than the date of delivery, provide free of charge information and drawings which are necessary to permit and enable BHEL to erect, commission, operate and maintain the product. Such information and drawings shall be supplied in as many numbers of copies as may be agreed upon.

All intellectual properties, including designs, drawings and product information etc. exchanged during the formation and execution of the Contract shall continue to be the property of the disclosing party.

23. **Intellectual Property Rights, Licenses**: If any Patent, design, Trade mark or any other intellectual property rights apply to the delivery (goods/related service) or accompanying documentation shall be the exclusive property of the Vendor and BHEL shall be entitled to the legal use thereof free of charge by means of a nonexclusive, worldwide, perpetual license. All intellectual property rights that arise during the execution of the Purchase Order/ contract for delivery by vendor and/or by its employees or third parties involved by the vendor for performance of the agreement shall belong to BHEL. Vendor shall perform everything necessary to obtain or establish the above mentioned rights. The Vendor guarantees that the delivery does not infringe on any of the intellectual property rights of third parties. The Vendor shall do everything necessary to obtain or establish the alternate acceptable arrangement pending resolution of any (alleged) claims by third parties. The Vendor shall indemnify BHEL against any (alleged) claims by third parties in this regard and shall reimburse BHEL for any damages suffered as a result thereof.

24. **Force Majeure:** Notwithstanding anything contained in the purchase order or any other document relevant thereto, neither party shall be liable for any failure or delay in performance to the extent said failures or delays are caused by the “Act of God” and occurring without its fault or negligence, provided that, force majeure will apply only if the failure to perform could not be avoided by the exercise of due care and vendor doing everything reasonably possible to resume its performance.

A party affected by an event of force majeure which may include fire, tempest, floods, earthquake, riot, war, damage by aircraft etc., shall give the other party written notice, with full details as soon as possible and in any event not later than seven (7) calendar days of the occurrence of the cause relied upon. If force majeure applies, dates by which performance obligations are scheduled to be met will be extended for a period of time equal to the time lost due to any delay so caused.

Notwithstanding above provisions, in an event of Force Majeure, BHEL reserves for itself the right to cancel the order/ contract, wholly or partly, in order to meet the overall project schedule and make alternative arrangements for completion of deliveries and other schedules.

25. Warranty:

Wherever required, and so provided in the specifications/ Purchaser Order, the Seller shall ensure that the goods supplied shall comply with the specifications laid down, for materials, workmanship and performance.

If the vendor fails to take proper corrective action to repair/replace defects satisfactorily within a reasonable period, Purchaser shall be free to take corrective action as may be deemed necessary at Vendor's Risk and Cost after giving notice to Vendor, including arranging supply of goods from elsewhere at sole risk and cost of Vendor.

Unless otherwise specified in SCC, warranty period shall be applicable for a period of 24 months from the date of delivery of goods or 18 months from the date of commissioning of goods, whichever is earlier. The warranty period as described above shall apply afresh to replaced, repaired or re-executed parts of a delivery. Unless otherwise specifically provided in the Purchase Order, Vendor's liability shall be co terminus with the expiration of the applicable warranty period.

26. Limitation of Liability: Vendor's liability towards this contract is limited to a maximum of 100% of the contract value and consequential damages are excluded. However, the limits of liability will have no effect in cases of criminal negligence or willful misconduct.

The total liability of Vendor for all claims arising out of or relating to the performance or breach of the Contract or use of any Products or Services or any order shall not exceed the total Contract price.

27. Liability during Warranty: Vendor shall arrange replacement / repair of all the defective materials / services under its obligation during the warranty period. The rejected goods shall be taken away by vendor and replaced / repaired. In the event of the vendor's failure to comply, BHEL may take appropriate action including disposal of rejections and replenishment by any other sources at the cost and risk of the vendor. In case, defects attributable to vendor are detected during Warranty period or where the commissioning call is issued within the warranty period, vendor shall be responsible for replacement/ repair of the goods as required by BHEL at vendor's cost even after expiry of warranty period.

Further if the equipment or any part thereof cannot be used by reason of such defect and/or making good of such defect, the warranty period of the equipment or such part, as the case may be, shall be extended by a period equal to the period during which the equipment or such part cannot be used by BHEL because of any of the aforesaid reasons. Upon correction of the defects in the facilities or any part thereof by repair/replacement, such repair/replacement shall have the warranty period for a

period of twelve (12) months from the time such replacement/repair of the equipment or any part thereof has been completed.

28. **Liability after warranty period:** At the end of the warranty, the Vendor's liability ceases except for latent defects. For the purpose of this clause, latent defects shall be the defects inherently lying within the material or arising out of design deficiency which do not manifest themselves during the warranty Period, but later. The Contractor's liability for latent defects warranty for the equipment including spares shall be limited to a period of six months from the end of the warranty period of the respective equipment including spares or first time commissioning, whichever is later but not later than one (01) year from the date of expiry of warranty period.

29. **Compliance with Laws:** Vendor shall, in performing the contract, comply with all applicable laws. The vendor shall make all remittances, give all notices, pay all taxes, duties and fees, and obtain all permits, licenses and approvals, as required by the laws in relation to the execution and completion of the contract and for remedying of any defects; and the Contractor shall indemnify and hold BHEL harmless against and from the consequences of any failure to do so.

30. **Settlement of Disputes:** Except as otherwise specifically provided in the Purchase Order, decision of BHEL shall be binding on the vendor with respect to all questions relating to the interpretation or meaning of the terms and conditions and instructions herein before mentioned and as to the completion of supplies/work/services, other questions, claim, right, matter or things whatsoever in any way arising out of or relating to the contract, instructions, orders or these conditions or otherwise concerning the supply or the execution or failure to execute the order, whether arising during the schedule of supply/work or after the completion or abandonment thereof. Any disputes or differences among the parties shall to the extent possible be settled amicably between the parties thereto, failing which the disputed issues shall be settled through arbitration. Vendor shall continue to perform the contract, pending settlement of dispute(s).

31. **Arbitration Clause in case of Contract with vendors other than Public Sector Enterprise (PSE) or a Government Department:**

ARBITRATION & CONCILIATION

The parties shall attempt to settle any disputes or difference arising out of the formation, breach, termination, validity or execution of the Contract; or, the respective rights and liabilities of the parties; or, in relation to interpretation of any provision of the Contract; or, in any manner touching upon the Contract, or in connection with this contract through friendly discussions. In case no amicable settlement can be reached between the parties through such discussions, in respect of any dispute; then, either Party may, by a notice in writing to the other Party refer such dispute or difference to the sole arbitration of an arbitrator appointed by Head of the BHEL–EDN. Such Sole Arbitrator appointed, shall conduct the arbitration in English language.

The Arbitrator shall pass a reasoned award and the award of the Arbitration shall be final and binding upon the Parties.

Subject as aforesaid, the provisions of Arbitration and Conciliation Act 1996 (India) or statutory modifications or re-enactments thereof and the rules made thereunder and for the time being in force shall apply to the arbitration proceedings under this clause. The seat of arbitration shall be Bangalore. The cost of arbitration shall be borne as decided by the Arbitrator upon him entering the reference. Subject to the Arbitration Clause as above, the Courts at Bangalore alone shall have exclusive jurisdiction over any matter arising out of or in connection with this Contract.

Notwithstanding the existence or any dispute or differences and/or reference for the arbitration, the parties shall proceed with and continue without hindrance the performance of its obligations under this Contract with due diligence and efficiency in a professional manner except where the Contract has been terminated by either Party in terms of this Contract.

Arbitration Clause in case of Contract with a Public Sector Enterprise (PSE) or a Government Department:

In the event of any dispute or difference relating to the interpretation and application of the provisions of the Contract, such dispute or difference shall be referred by either party for Arbitration to the Sole Arbitrator in the Department of Public Enterprises to be nominated by the Secretary to the Government of India in-charge of the Department of Public Enterprises. The Arbitration and Conciliation Act, 1996 shall not be applicable to arbitration under this clause. The award of the Arbitrator shall be binding upon the parties to the dispute, provided, however, any Party aggrieved by such Award may make further reference for setting aside or revision of the Award to the Law Secretary, Department of Legal Affairs, Ministry of Law and Justice, Government of India. Upon such reference the dispute shall be decided by the Law Secretary or the Special Secretary or Additional Secretary when so authorized by the Law Secretary, whose decision shall bind the Parties hereto finally and conclusively. The Parties to the dispute will share equally the cost of arbitration as intimated by the Arbitrator.'

32. **Applicable Laws and Jurisdiction of Courts:** Prevailing Indian laws both substantive and procedural, including modifications thereto, shall govern the Contract. Subject to the conditions as aforesaid, the competent courts in Bangalore alone shall have jurisdiction to consider over any matters touching upon this contract.

33. **General Terms:** That any non-exercise, forbearance or omission of any of the powers conferred on BHEL and /or any of its authorities will not in any manner constitute waiver of the conditions hereto contained in these presents.

That the headings used in this agreement are for convenience of reference only.

That all notices etc., to be given under the Purchase order shall be in writing, type script or printed and if sent by registered post or by courier service to the address given in this document shall be deemed to have been served on the date when in the ordinary course, they would have been delivered to the addressee.

GUIDELINES FOR
REVERSE AUCTION - 2020

(AA:SSP:RA:04)
revised as on 04.03.2020

(applicable for all NITs issued on or after 04.06.2020)

Note: Abridged version for information of the bidders

ABRIDGED VERSION

SOURCING STRATEGY & POLICY
CORPORATE OPERATIONS MANAGEMENT

BHARAT HEAVY ELECTRICALS LIMITED

Regd. Office: BHEL House, Siri Fort, New Delhi – 110049, India
Website: www.bhel.com
CIN: L74899DL1964GOI004281

1.0 Scope

This document describes the guidelines to be followed by each Unit/ Division/ Region for conducting Reverse Auction (RA) for procurement of material/ works/ services. These guidelines will be applicable for all purchases/ contracts to be awarded under Purchase/ Works policy and the RA shall follow the philosophy of English Reverse (No ties).

English Reverse (No ties) is a type of auction where the starting price and bid decrement are announced before start of online reverse auction. The interested bidders can thereupon start bidding in an iterative process wherein the lowest bidder at any given moment can be displaced by an even lower bid of a competing bidder, within a given time frame. The bidding is with reference to the current lowest bid in the reverse auction. All bidders will see the current lowest quoted price and their rank. The term 'No ties' is used since more than one bidder cannot give an identical price, at a given instant, during the reverse auction. In other words, there shall never be a tie in the bids.

3.0 Upfront declaration in NIT

Wherever it is felt that procurement may be done through Reverse Auction, the bids shall be invited in two parts/ three parts or single part bid (Price Bid) where Techno-Commercial MoU already exists. Wherever, the evaluation is done for individual line item, separate sealed envelope price bid for each line item shall be taken.

Decision to go for RA would be taken before floating of the tender. In case it is decided to go for RA, same shall be declared upfront in NIT by inserting the following **clause:**

"BHEL shall be resorting to Reverse Auction (RA) (Guidelines as available on www.bhel.com) for this tender. RA shall be conducted among all the techno-commercially qualified bidders.

Price bids of all techno-commercially qualified bidders shall be opened and same shall be considered as initial bids of bidders in RA. In case any bidder(s) do(es) not participate in online Reverse Auction, their sealed envelope price bid along with applicable loading, if any, shall be considered for ranking."

ABRIDGED VERSION

6.0 Business rules for RA

Model Annexure-I is attached.

7.0 Role of Service Provider

- Acknowledge the receipt of mandate from BHEL.
- Contact the bidders, provide business rules and train them, as required.
- Get the process compliance form signed by all the participating bidders before RA event.
- Conduct the event as per the contract and business rules.
- Submit the Login Reports, Results, History sheet and authorized final bid from the bidders.
- To obtain price breakup from successful bidder and submit the same to BHEL.

10.0 Reverse Auction Process

10.1 Reverse Auction will be conducted if three or more bidders are techno-commercially qualified. In case of more than four techno-commercially qualified bidders, H1 bidder (whose quote is highest in sealed envelope price bid) shall not be allowed to participate in RA. However, there will be no H1 removal in case H1 happens to be MSE or qualifying under PPP-MII, Order 2017 irrespective of the number of bidders qualifying techno-commercially.

In case of multiple H1 bidders, all H1 bidders (excluding MSEs and bidders qualifying under PPP-MII, Order 2017) shall be removed provided minimum three bidders remain in fray, else no H1 removal.

10.2 During RA, all bidders will see their rank and current L1 price and their ranking L1, L2 etc. on the screen. Once the RA is done, the ranking status would be based on the last quoted price of the bidder(s) irrespective of the quote received in RA or sealed envelope price bid.

10.3 No bidder shall be allowed to lower its bid below the current L1 by more than 5 decrements at one go.

ABRIDGED VERSION

13.0 Processing of case after RA

13.1 Wherever the evaluation is done on total cost basis, after Reverse Auction, prices of individual line items shall be reduced on pro-rata basis.

13.2 In case of splitting requirement, H1 bidder(s) who were removed from participation in RA may also be considered for counter offer if the pre-stated (NIT) numbers of suppliers do not accept the counter offer.

15.0 Others

15.2 In case of enquiry through e-Procurement, the sealed electronic price bid (e-bid) is to be treated as sealed envelope price bid.

15.3 BHEL will inform bidders the details of service provider who will provide business rules, all necessary training and assistance before commencement of online bidding.

15.4 Bidders are advised to read the 'Business Rules' indicating details of RA event carefully, before reverse auction event.

---xxx---

ABRIDGED VERSION

Doc. No. AA:SSP:RA:04
Dated: 04.03.2020

Business Rules for Reverse Auction

Annexure – I

This has reference to tender no ***{tender number….date**…}*. BHEL shall finalise the Rates for the supply of *{item name}* through Reverse Auction mode. BHEL has made arrangement with M/s. *{Service provider},* who shall be BHEL's authorized service provider for the same. Bidders should go through the instructions given below and submit acceptance of the same.

The technical & commercial terms are as per (a) BHEL Tender Enq. No. {…} dated {...}, (b) Bidders' technical & commercial bid (in case of two part bid) and (c) subsequent correspondences between BHEL and the bidders, if any.

1. Procedure of Reverse Auctioning

i. Price bids of all techno-commercially qualified bidders shall be opened.

ii. **Online Reverse Auction**: The 'bid decrement' will be decided by BHEL.

iv. Bidders by offering a minimum bid decrement or the multiples thereof can displace a standing lowest bid and become "L1" and this continues as an iterative process. However, no bidder shall be allowed to lower its bid below the current L1 by more than 5 decrements at one go.

v. After the completion of the online reverse auction, the Closing Price (CP) shall be available for further processing.

vi. Wherever the evaluation is done on total cost basis, after Reverse Auction, prices of individual line items shall be reduced on pro-rata basis.

2. Schedule for reverse auction: The Reverse Auction is tentatively scheduled on *{date}: ;{start time}: ;{Close Time: }*.

3. Auction extension time: If a bidder places a bid in the last {…} minutes of closing of the Reverse Auction and if that bid gets accepted, then the auction's duration shall get extended automatically for another {…} minutes, for the entire auction (i.e. for all the items in the auction), from the time that bid comes in. Please note that the auto-extension will take place only if a bid comes in those last {…} minutes and if that bid gets accepted as the lowest bid. If the bid does not get accepted as the lowest bid, the auto-extension will not take place even if that bid might have come in the last {…} minutes. In case, there is no bid in the last {…} minutes of closing of Reverse

ABRIDGED VERSION

Auction, the auction shall get closed automatically without any extension. However, bidders are advised not to wait till the last minute or last few seconds to enter their bid during the auto-extension period to avoid complications related with internet connectivity, network problems, system crash down, power failure, etc.

The above process will continue till completion of Reverse Auction.

Complaints/ Grievances, if any, regarding denial of service or any related issue should be given in writing thru e-mail/ fax to M/s. {Service provider} with a copy to BHEL within 15 minutes prior to initial closing time of Online Reverse Auction.

4. **Bid price:** The Bidder has to quote the {……} Price inclusive of Packing & Forwarding charges, all the routine & type tests as per tender scope, taxes, duties, freight and insurance as specified in tender document. including loading (if indicated by BHEL due to deviations in technical/ commercial terms) for the Items specified. Details are as shown in Excel Sheet for calculation of total cost to BHEL (To be specified by Unit as per NIT conditions).

5. **Bidding currency and unit of measurement:** Bidding will be conducted in *Indian Rupees* per *Unit* of the material as per the specifications {...}

   In case of foreign currency bids, exchange rate (TT selling rate of State Bank of India) as on scheduled date of tender opening (Part-I bid) shall be considered for conversion in Indian Rupees. If the relevant day happens to be a Bank holiday, then the forex rate as on the previous bank (SBI) working day shall be taken.

6. **Validity of bids:** Price shall be valid for {… *days}* from the date of reverse auction. These shall not be subjected to any change whatsoever.

7. **Lowest bid of a bidder**: In case the bidder submits more than one bid, the lowest bid at the end of Online Reverse Auction will be considered as the bidder's final offer to execute the work.

8. Unique user IDs shall be used by bidders during bidding process. All bids made from the Login ID given to the bidders will be deemed to have been

ABRIDGED VERSION

made by the bidders/ bidders' company.

9. **Post auction procedure**: BHEL will proceed with the Lowest Bid in the Reverse Auction for further processing.

11. Computerized reverse auction shall be conducted by BHEL (through M/s {*Service Provider*}), on pre-specified date, while the bidders shall be quoting from their own offices/ place of their choice. Internet connectivity shall have to be ensured by bidders themselves.

    During the RA process if a bidder is not able to bid and requests for extension of time by FAX/ email/ phone then time extension of additional 15 minutes will be given by the service provider provided such requests come before 5 minutes of auction closing time. However, only one such request per bidder can be entertained.

    In order to ward-off contingent situation of connectivity failure bidders are requested to make all the necessary arrangements/ alternatives whatever required so that they are able to circumvent such situation and still be able to participate in the reverse auction successfully. Failure of power or loss of connectivity at the premises of bidders during the Reverse auction cannot be the cause for not participating in the reverse auction. On account of this, the time for the auction cannot be extended and neither BHEL nor M/s. {*Service provider*} is responsible for such eventualities.

12. Proxy bids: Proxy bidding feature is a pro-bidder feature to safe guard the bidder's interest of any internet failure or to avoid last minute rush. The proxy feature allows bidders to place an automated bid in the system directly in an auction and bid without having to enter a new amount each time a competing bidder submits a new offer. The bid amount that a bidder enters is the minimum that the bidder is willing to offer. Here the software bids on behalf of the bidder. This obviates the need for the bidder participating in the bidding process until the proxy bid amount is decrementally reached by other bidders. When proxy bid amount is reached, the bidder (who has submitted the proxy bid) has an option to start participating in the bidding process.

    The proxy amount is the minimum amount that the bidder is willing to offer. During the course of bidding, the bidder cannot delete or change the

ABRIDGED VERSION

amount of a proxy bid.

Bids are submitted in decrements (decreasing bid amounts). The application automates proxy bidding by processing proxy bids automatically, according to the decrement that the auction originator originally established when creating the auction, submitting offers to the next bid decrement each time a competing bidder bids, regardless of the fact whether the competing bids are submitted as proxy or standard bids. However, it may please be noted that if a manual bid and proxy bid are submitted at the same instant manual bid will be recognized as the L1 at that instant.

In case of more than one proxy bid, the system shall bid till it crosses the threshold value of 'each lowest proxy bid' and thereafter allow the competition to decide the final L1 price.

Proxy bids are fed into the system directly by the respective bidders. As such this information is privy only to the respective bidder(s).

13. Bidders are advised to get fully trained and clear all their doubts such as refreshing of Screen, quantity being auctioned, tender value being auctioned etc from M/s {*Service provider*}.

14. M/s. {*Service provider*}, shall arrange to demonstrate/ train the bidder or bidder's nominated person(s), without any cost to bidders. M/s. {*Service provider*}, shall also explain the bidders, all the business rules related to the Reverse Auction. Bidders are required to submit their acceptance to the terms/ conditions/ modalities before participating in the Reverse Auction in the process compliance form as enclosed. Without this, the bidder will not be eligible to participate in the event.

15. Successful bidder shall be required to submit the final prices (L1) in prescribed format for price breakup, quoted during the Online Reverse Auction, duly signed and stamped as token of acceptance without any new condition (other than those already agreed to before start of auction), after the completion of auction to M/s. {*Service provider*} besides BHEL within two working days of Auction without fail.

16. Any variation between the final bid value and that in the confirmatory signed price breakup document will be considered as tampering the tender

ABRIDGED VERSION

process and will invite action by BHEL as per extant guidelines for suspension of business dealings (as available on www.bhel.com).

17. Bidders' bid will be taken as an offer to execute the work/ supplies the item as per enquiry no. {…} dt. {…}. Bids once made by the bidder, cannot be cancelled/ withdrawn and bidder shall be bound to execute the work as mentioned above at bidder's final bid price. Should bidder back out and not execute the contract as per the rates quoted, BHEL shall take action as per extant guidelines for suspension of business dealings (as available on www.bhel.com).

18. Bidders shall be able to view the following on their screen along with the necessary fields during Online Reverse Auction:

    a. Leading (Running Lowest) Bid in the Auction (only total price of package)
    b. Bid Placed by the bidder
    c. Start Price
    d. Decrement value
    e. Rank of their own bid during bidding as well as at the close of auction.

19. BHEL's decision on award of contract shall be final and binding on all the Bidders.

20. BHEL reserves the right to extend, reschedule or cancel the Reverse Auction process at any time, before ordering, without assigning any reason, with intimation to bidders.

21. BHEL shall not have any liability to bidders for any interruption or delay in access to the site irrespective of the cause. In such cases, the decision of BHEL shall be binding on the bidders.

22. Other terms and conditions shall be as per bidder's techno-commercial offers and other correspondences, if any, till date.

23. If there is any clash between this business document and the FAQ available, if any, in the website of M/s. {*Service provider*}, the terms & conditions given in this business document will supersede the information contained in the FAQs. Any changes made by BHEL/ service provider (due to unforeseen contingencies) after the first posting shall be deemed to have been

ABRIDGED VERSION

accepted if the bidder continues to access the portal after that time.

24. Bidder shall not divulge either his Bids or any other exclusive details of BHEL to any other party. If the Bidder or any of his representatives are found to be involved in Price manipulation/ cartel formation of any kind, directly or indirectly by communicating with other bidders, action *as per extant BHEL guidelines for suspension of business dealings (as available on www.bhel.com)*, shall be initiated by BHEL.

ABRIDGED VERSION

No. P-45021/2/2017-PP (BE-II)
Government of India
Ministry of Commerce and Industry
Department for Promotion of Industry and Internal Trade
(Public Procurement Section)

Udyog Bhawan, New Delhi
Dated: 16th September, 2020

To

All Central Ministries/Departments/CPSUs/All concerned

ORDER

Subject: Public Procurement (Preference to Make in India), Order 2017– Revision; regarding.

Department for Promotion of Industry and Internal Trade, in partial modification [Paras 2, 3, 5, 10 & 13] of Order No.P-45021/2/2017-B.E.-II dated 15.6.2017 as amended by Order No.P-45021/2/2017-B.E.-II dated 28.05.2018, Order No.P-45021/2/2017-B.E.-II dated 29.05.2019 and Order No.P-45021/2/2017-B.E.-II dated 04.06.2020, hereby issues the revised 'Public Procurement (Preference to Make in India), Order 2017" dated 16.09.2020 effective with immediate effect.

Whereas it is the policy of the Government of India to encourage 'Make in India' and promote manufacturing and production of goods and services in India with a view to enhancing income and employment, and

Whereas procurement by the Government is substantial in amount and can contribute towards this policy objective, and

Whereas local content can be increased through partnerships, cooperation with local companies, establishing production units in India or Joint Ventures (JV) with Indian suppliers, increasing the participation of local employees in services and training them,

Now therefore the following Order is issued:

1. This Order is issued pursuant to Rule 153 (iii) of the General Financial Rules 2017.

2. **Definitions**: For the purposes of this Order:

   'Local content' means the amount of value added in India which shall, unless otherwise prescribed by the Nodal Ministry, be the total value of the item procured (excluding net domestic indirect taxes) minus the value of imported content in the item (including all customs duties) as a proportion of the total value, in percent.

   'Class-I local supplier' means a supplier or service provider, whose goods, services or works offered for procurement, meets the minimum local content as prescribed for 'Class-I local supplier' under this Order.

.....Contd. p/2

'Class-II local supplier' means a supplier or service provider, whose goods, services or works offered for procurement, meets the minimum local content as prescribed for 'Class-II local supplier' but less than that prescribed for 'Class-I local supplier' under this Order.

'Non - Local supplier' means a supplier or service provider, whose goods, services or works offered for procurement, has local content less than that prescribed for 'Class-II local supplier' under this Order.

'L1' means the lowest tender or lowest bid or the lowest quotation received in a tender, bidding process or other procurement solicitation as adjudged in the evaluation process as per the tender or other procurement solicitation.

'Margin of purchase preference' means the maximum extent to which the price quoted by a "Class-I local supplier" may be above the L1 for the purpose of purchase preference.

'Nodal Ministry' means the Ministry or Department identified pursuant to this order in respect of a particular item of goods or services or works.

'Procuring entity' means a Ministry or department or attached or subordinate office of, or autonomous body controlled by, the Government of India and includes Government companies as defined in the Companies Act.

'Works' means all works as per Rule 130 of GFR- 2017, and will also include *'turnkey works'*.

3. Eligibility of 'Class-I local supplier'/ 'Class-II local supplier'/ 'Non-local suppliers' for different types of procurement

(a) In procurement of all goods, services or works in respect of which the Nodal Ministry / Department has communicated that there is sufficient local capacity and local competition, only 'Class-I local supplier', as defined under the Order, shall be eligible to bid irrespective of purchase value.

(b) Only 'Class-I local supplier' and 'Class-II local supplier', as defined under the Order, shall be eligible to bid in procurements undertaken by procuring entities, except when Global tender enquiry has been issued. In global tender enquiries, 'Non-local suppliers' shall also be eligible to bid along with 'Class-I local suppliers' and 'Class-II local suppliers'. In procurement of all goods, services or works, not covered by sub-para 3(a) above, and with estimated value of purchases less than Rs. 200 Crore, in accordance with Rule 161(iv) of GFR, 2017, Global tender enquiry shall not be issued except with the approval of competent authority as designated by Department of Expenditure.

(c) For the purpose of this Order, works includes Engineering, Procurement and Construction (EPC) contracts and services include System Integrator (SI) contracts.

.....Contd. p/3

3A. Purchase Preference

(a) Subject to the provisions of this Order and to any specific instructions issued by the Nodal Ministry or in pursuance of this Order, purchase preference shall be given to 'Class-I local supplier' in procurements undertaken by procuring entities in the manner specified here under.

(b) In the procurements of goods or works, which are covered by para 3(b) above and which are divisible in nature, the 'Class-I local supplier' shall get purchase preference over 'Class-II local supplier' as well as 'Non-local supplier', as per following procedure:

i. Among all qualified bids, the lowest bid will be termed as L1. If L1 is 'Class-I local supplier', the contract for full quantity will be awarded to L1.

ii. If L1 bid is not a 'Class-I local supplier', 50% of the order quantity shall be awarded to L1. Thereafter, the lowest bidder among the 'Class-I local supplier' will be invited to match the L1 price for the remaining 50% quantity subject to the Class-I local supplier's quoted price falling within the margin of purchase preference, and contract for that quantity shall be awarded to such 'Class-I local supplier' subject to matching the L1 price. In case such lowest eligible 'Class-I local supplier' fails to match the L1 price or accepts less than the offered quantity, the next higher 'Class-I local supplier' within the margin of purchase preference shall be invited to match the L1 price for remaining quantity and so on, and contract shall be awarded accordingly. In case some quantity is still left uncovered on Class-I local suppliers, then such balance quantity may also be ordered on the L1 bidder.

(c) In the procurements of goods or works, which are covered by para 3(b) above and which are not divisible in nature, and in procurement of services where the bid is evaluated on price alone, the 'Class-I local supplier' shall get purchase preference over 'Class-II local supplier' as well as 'Non-local supplier', as per following procedure:

i. Among all qualified bids, the lowest bid will be termed as L1. If L1 is 'Class-I local supplier', the contract will be awarded to L1.

ii. If L1 is not 'Class-I local supplier', the lowest bidder among the 'Class-I local supplier', will be invited to match the L1 price subject to Class-I local supplier's quoted price falling within the margin of purchase preference, and the contract shall be awarded to such 'Class-I local supplier' subject to matching the L1 price.

iii. In case such lowest eligible 'Class-I local supplier' fails to match the L1 price, the 'Class-I local supplier' with the next higher bid within the margin of purchase preference shall be invited to match the L1 price and so on and contract shall be awarded accordingly. In case none of the 'Class-I local supplier' within the margin of purchase preference matches the L1 price, the contract may be awarded to the L1 bidder.

.....Contd. p/4

(d) "Class-II local supplier" will not get purchase preference in any procurement, undertaken by procuring entities.

3B. Applicability in tenders where contract is to be awarded to multiple bidders - In tenders where contract is awarded to multiple bidders subject to matching of L1 rates or otherwise, the 'Class-I local supplier' shall get purchase preference over 'Class-II local supplier' as well as 'Non-local supplier', as per following procedure:

a) In case there is sufficient local capacity and competition for the item to be procured, as notified by the nodal Ministry, only Class I local suppliers shall be eligible to bid. As such, the multiple suppliers, who would be awarded the contract, should be all and only 'Class I Local suppliers'.

b) In other cases, 'Class II local suppliers' and 'Non local suppliers' may also participate in the bidding process along with 'Class I Local suppliers' as per provisions of this Order.

c) If 'Class I Local suppliers' qualify for award of contract for at least 50% of the tendered quantity in any tender, the contract may be awarded to all the qualified bidders as per award criteria stipulated in the bid documents. However, in case 'Class I Local suppliers' do not qualify for award of contract for at least 50% of the tendered quantity, purchase preference should be given to the 'Class I local supplier' over 'Class II local suppliers'/ 'Non local suppliers' provided that their quoted rate falls within 20% margin of purchase preference of the highest quoted bidder considered for award of contract so as to ensure that the 'Class I Local suppliers' taken in totality are considered for award of contract for at least 50% of the tendered quantity.

d) First purchase preference has to be given to the lowest quoting 'Class-I local supplier', whose quoted rates fall within 20% margin of purchase preference, subject to its meeting the prescribed criteria for award of contract as also the constraint of maximum quantity that can be sourced from any single supplier. If the lowest quoting 'Class-I local supplier', does not qualify for purchase preference because of aforesaid constraints or does not accept the offered quantity, an opportunity may be given to next higher 'Class-I local supplier', falling within 20% margin of purchase preference, and so on.

e) To avoid any ambiguity during bid evaluation process, the procuring entities may stipulate its own tender specific criteria for award of contract amongst different bidders including the procedure for purchase preference to 'Class-I local supplier' within the broad policy guidelines stipulated in sub-paras above.

4. **Exemption of small purchases**: Notwithstanding anything contained in paragraph 3, procurements where the estimated value to be procured is less than Rs. 5 lakhs shall be exempt from this Order. However, it shall be ensured by procuring entities that procurement is not split for the purpose of avoiding the provisions of this Order.

5. **Minimum local content**: The 'local content' requirement to categorize a supplier as 'Class-I local supplier' is minimum 50%. For 'Class-II local supplier', the 'local content' requirement is minimum 20%. Nodal Ministry/ Department may prescribe only a higher

.....Contd. p/5

percentage of minimum local content requirement to categorize a supplier as 'Class-I local supplier'/ 'Class-II local supplier'. For the items, for which Nodal Ministry/ Department has not prescribed higher minimum local content notification under the Order, it shall be 50% and 20% for 'Class-I local supplier'/ 'Class-II local supplier' respectively.

6. **Margin of Purchase Preference**: The margin of purchase preference shall be 20%.

7. **Requirement for specification in advance**: The minimum local content, the margin of purchase preference and the procedure for preference to Make in India shall be specified in the notice inviting tenders or other form of procurement solicitation and shall not be varied during a particular procurement transaction.

8. **Government E-marketplace**: In respect of procurement through the Government E-marketplace (GeM) shall, as far as possible, specifically mark the items which meet the minimum local content while registering the item for display, and shall, wherever feasible, make provision for automated comparison with purchase preference and without purchase preference and for obtaining consent of the local supplier in those cases where purchase preference is to be exercised.

9. **Verification of local content**:

   a. The 'Class-I local supplier'/ 'Class-II local supplier' at the time of tender, bidding or solicitation shall be required to indicate percentage of local content and provide self-certification that the item offered meets the local content requirement for 'Class-I local supplier'/ 'Class-II local supplier', as the case may be. They shall also give details of the location(s) at which the local value addition is made.

   b. In cases of procurement for a value in excess of Rs. 10 crores, the 'Class-I local supplier'/ 'Class-II local supplier' shall be required to provide a certificate from the statutory auditor or cost auditor of the company (in the case of companies) or from a practicing cost accountant or practicing chartered accountant (in respect of suppliers other than companies) giving the percentage of local content.

   c. Decisions on complaints relating to implementation of this Order shall be taken by the competent authority which is empowered to look into procurement-related complaints relating to the procuring entity.

   d. Nodal Ministries may constitute committees with internal and external experts for independent verification of self-declarations and auditor's/ accountant's certificates on random basis and in the case of complaints.

   e. Nodal Ministries and procuring entities may prescribe fees for such complaints.

   f. False declarations will be in breach of the Code of Integrity under Rule 175(1)(i)(h) of the General Financial Rules for which a bidder or its successors can be debarred for up to two years as per Rule 151 (iii) of the General Financial Rules along with such other actions as may be permissible under law.

.....Contd. p/6

g. A supplier who has been debarred by any procuring entity for violation of this Order shall not be eligible for preference under this Order for procurement by any other procuring entity for the duration of the debarment. The debarment for such other procuring entities shall take effect prospectively from the date on which it comes to the notice of other procurement entities, in the manner prescribed under paragraph 9h below.

h. The Department of Expenditure shall issue suitable instructions for the effective and smooth operation of this process, so that:

   i. The fact and duration of debarment for violation of this Order by any procuring entity are promptly brought to the notice of the Member-Convenor of the Standing Committee and the Department of Expenditure through the concerned Ministry /Department or in some other manner;

   ii. on a periodical basis such cases are consolidated and a centralized list or decentralized lists of such suppliers with the period of debarment is maintained and displayed on website(s);

   iii. in respect of procuring entities other than the one which has carried out the debarment, the debarment takes effect prospectively from the date of uploading on the website(s) in the such a manner that ongoing procurements are not disrupted.

10. **Specifications in Tenders and other procurement solicitations**:

a. Every procuring entity shall ensure that the eligibility conditions in respect of previous experience fixed in any tender or solicitation do not require proof of supply in other countries or proof of exports.

b. Procuring entities shall endeavour to see that eligibility conditions, including on matters like turnover, production capability and financial strength do not result in unreasonable exclusion of 'Class-I local supplier'/ 'Class-II local supplier' who would otherwise be eligible, beyond what is essential for ensuring quality or creditworthiness of the supplier.

c. Procuring entities shall, within 2 months of the issue of this Order review all existing eligibility norms and conditions with reference to sub-paragraphs 'a' and 'b' above.

d. Reciprocity Clause

   i. When a Nodal Ministry/Department identifies that Indian suppliers of an item are not allowed to participate and/ or compete in procurement by any foreign government, due to restrictive tender conditions which have direct or indirect effect of barring Indian companies such as registration in the procuring country, execution of projects of specific value in the procuring country etc., it shall provide such details to all its procuring entities including CMDs/CEOs of PSEs/PSUs, State Governments and other procurement agencies under their administrative control and GeM for appropriate reciprocal action.

.....Contd. p/7

ii. Entities of countries which have been identified by the nodal Ministry/Department as not allowing Indian companies to participate in their Government procurement for any item related to that nodal Ministry shall not be allowed to participate in Government procurement in India for all items related to that nodal Ministry/ Department, except for the list of items published by the Ministry/ Department permitting their participation.

iii. The stipulation in (ii) above shall be part of all tenders invited by the Central Government procuring entities stated in (i) above. All purchases on GeM shall also necessarily have the above provisions for items identified by nodal Ministry/ Department.

iv. State Governments should be encouraged to incorporate similar provisions in their respective tenders.

v. The term 'entity' of a country shall have the same meaning as under the FDI Policy of DPIIT as amended from time to time.

e. Specifying foreign certifications/ unreasonable technical specifications/ brands/ models in the bid document is restrictive and discriminatory practice against local suppliers. If foreign certification is required to be stipulated because of non-availability of Indian Standards and/or for any other reason, the same shall be done only after written approval of Secretary of the Department concerned or any other Authority having been designated such power by the Secretary of the Department concerned.

f. "All administrative Ministries/Departments whose procurement exceeds *Rs.* 1000 Crore per annum shall notify/ update their procurement projections every year, including those of the PSEs/PSUs, for the next 5 years on their respective website."

10A. Action for non-compliance of the Provisions of the Order: In case restrictive or discriminatory conditions against domestic suppliers are included in bid documents, an inquiry shall be conducted by the Administrative Department undertaking the procurement (including procurement by any entity under its administrative control) to fix responsibility for the same. Thereafter, appropriate action, administrative or otherwise, shall be taken against erring officials of procurement entities under relevant provisions. Intimation on all such actions shall be sent to the Standing Committee.

11. **Assessment of supply base by Nodal Ministries**: The Nodal Ministry shall keep in view the domestic manufacturing / supply base and assess the available capacity and the extent of local competition while identifying items and prescribing the higher minimum local content or the manner of its calculation, with a view to avoiding cost increase from the operation of this Order.

12. **Increase in minimum local content**: The Nodal Ministry may annually review the local content requirements with a view to increasing them, subject to availability of sufficient local competition with adequate quality.

.....Contd. p/8

13. **Manufacture under license/ technology collaboration agreements with phased indigenization**: While notifying the minimum local content, Nodal Ministries may make special provisions for exempting suppliers from meeting the stipulated local content if the product is being manufactured in India under a license from a foreign manufacturer who holds intellectual property rights and where there is a technology collaboration agreement / transfer of technology agreement for indigenous manufacture of a product developed abroad with clear phasing of increase in local content.

13A. In procurement of all goods, services or works in respect of which there is substantial quantity of public procurement and for which the nodal ministry has not notified that there is sufficient local capacity and local competition, the concerned nodal ministry shall notify an upper threshold value of procurement beyond which foreign companies shall enter into a joint venture with an Indian company to participate in the tender. Procuring entities, while procuring such items beyond the notified threshold value, shall prescribe in their respective tenders that foreign companies may enter into a joint venture with an Indian company to participate in the tender. The procuring Ministries/Departments shall also make special provisions for exempting such joint ventures from meeting the stipulated minimum local content requirement, which shall be increased in a phased manner.

14. **Powers to grant exemption and to reduce minimum local content**: The administrative Department undertaking the procurement (including procurement by any entity under its administrative control), with the approval of their Minister-in-charge, may by written order, for reasons to be recorded in writing,

    a. reduce the minimum local content below the prescribed level; or
    b. reduce the margin of purchase preference below 20%; or
    c. exempt any particular item or supplying entities from the operation of this Order or any part of the Order.

    A copy of every such order shall be provided to the Standing Committee and concerned Nodal Ministry / Department. The Nodal Ministry / Department concerned will continue to have the power to vary its notification on Minimum Local Content.

15. **Directions to Government companies**: In respect of Government companies and other procuring entities not governed by the General Financial Rules, the administrative Ministry or Department shall issue policy directions requiring compliance with this Order.

16. **Standing Committee**: A standing committee is hereby constituted with the following membership:

    Secretary, Department for Promotion of Industry and Internal Trade—Chairman
    Secretary, Commerce—Member
    Secretary, Ministry of Electronics and Information Technology—Member
    Joint Secretary (Public Procurement), Department of Expenditure—Member
    Joint Secretary (DPIIT)—Member-Convenor

.....Contd. p/9

The Secretary of the Department concerned with a particular item shall be a member in respect of issues relating to such item. The Chairman of the Committee may co-opt technical experts as relevant to any issue or class of issues under its consideration.

17. **Functions of the Standing Committee**: The Standing Committee shall meet as often as necessary, but not less than once in six months. The Committee

    a. shall oversee the implementation of this order and issues arising therefrom, and make recommendations to Nodal Ministries and procuring entities.
    b. shall annually assess and periodically monitor compliance with this Order
    c. shall identify Nodal Ministries and the allocation of items among them for issue of notifications on minimum local content
    d. may require furnishing of details or returns regarding compliance with this Order and related matters
    e. may, during the annual review or otherwise, assess issues, if any, where it is felt that the manner of implementation of the order results in any restrictive practices, cartelization or increase in public expenditure and suggest remedial measures
    f. may examine cases covered by paragraph 13 above relating to manufacture under license/ technology transfer agreements with a view to satisfying itself that adequate mechanisms exist for enforcement of such agreements and for attaining the underlying objective of progressive indigenization
    g. may consider any other issue relating to this Order which may arise.

18. **Removal of difficulties**: Ministries /Departments and the Boards of Directors of Government companies may issue such clarifications and instructions as may be necessary for the removal of any difficulties arising in the implementation of this Order.

19. **Ministries having existing policies**: Where any Ministry or Department has its own policy for preference to local content approved by the Cabinet after 1st January 2015, such policies will prevail over the provisions of this Order. All other existing orders on preference to local content shall be reviewed by the Nodal Ministries and revised as needed to conform to this Order, within two months of the issue of this Order.

20. **Transitional provision**: This Order shall not apply to any tender or procurement for which notice inviting tender or other form of procurement solicitation has been issued before the issue of this Order.

(Rajesh Gupta)
Director
Tel: 23063211
rajesh.gupta66@gov.in

रजिस्ट्री सं. डी.एल.- 33004/99 REGD. No. D. L.-33004/99

भारत का राजपत्र
The Gazette of India

सी.जी.-डी.एल.-अ.-26062020-220191
CG-DL-E-26062020-220191

असाधारण
EXTRAORDINARY
भाग II—खण्ड 3—उप-खण्ड (ii)
PART II—Section 3—Sub-section (ii)

प्राधिकार से प्रकाशित
PUBLISHED BY AUTHORITY

सं. 1875] नई दिल्ली, शुक्रवार, जून 26, 2020/आषाढ़ 5, 1942
No. 1875] NEW DELHI, FRIDAY, JUNE 26, 2020/ASADHA 5, 1942

सूक्ष्म, लघु और मध्यम उद्यम मंत्रालय

अधिसूचना

नई दिल्ली, 26 जून, 2020

का.आ. 2119(अ).—केन्द्रीय सरकार, सूक्ष्म, लघु और मध्यम उद्यम विकास अधिनियम, 2006 (2006 का 27), जिसे इसमें इसके पश्चात् उक्त अधिनियम कहा गया है, की धारा 7 की उप-धारा (9) के साथ पठित उप-धारा (1) और धारा 8 की उप-धारा (3) के साथ पठित उप-धारा (2) द्वारा प्रदत्त शक्तियों का प्रयोग करते हुए और भारत के राजपत्र, असाधारण, भाग II, खंड 3, उप-खंड (ii) में प्रकाशित भारत सरकार के सूक्ष्म, लघु और मध्यम उद्यम मंत्रालय की अधिसूचना सं. का.आ.1702(अ), तारीख 1 जून, 2020, का.आ.2052(अ), तारीख 30 जून, 2017, का.आ. 3322(अ), तारीख 1 नवम्बर, 2013 और का.आ. 1722(अ) तारीख 5 अक्तूबर, 2006 को, उन बातों के सिवाय अधिक्रांत करते हुए जिन्हें ऐसे अधिक्रमण से पहले किया गया है या करने का लोप किया गया है इस निमित्त सलाहकार समिति की सिफारिशों को अभिप्राप्त करने के पश्चात् 1 जुलाई, 2020 से सूक्ष्म, लघु और मध्यम उद्यम के रूप में वर्गीकरण के लिए कतिपय मानदंड अधिसूचित करती है और ज्ञापन (जिसे इस अधिसूचना में इसके पश्चात् "उद्यम रजिस्ट्रीकरण" कहा गया है) फाइल करने की प्ररूप और प्रक्रिया विनिर्दिष्ट करती है, अर्थात्:--

1. उद्यमों का वर्गीकरण.—उद्यम को निम्नलिखित मानदंड़ों के आधार पर सूक्ष्म, लघु या मध्यम उद्यम में वर्गीकृत किया जाएगा, अर्थात्:-

(i) ऐसा सूक्ष्म उद्यम, जहां संयंत्र और मशीनरी या उपस्कर में विनिधान एक करोड़ रुपए से अधिक नहीं है और आवर्तन पांच करोड़ रुपए से अधिक नहीं है;

(ii) ऐसा लघु उद्यम, जहां संयंत्र और मशीनरी या उपस्कर में विनिधान दस करोड़ रुपए से अधिक नहीं है और आवर्तन पचास करोड़ रुपए से अधिक नहीं है; और

(iii) ऐसा मध्यम उद्यम, जहां संयंत्र और मशीनरी या उपस्कर में विनिधान पचास करोड़ रुपए से अधिक नहीं है और आवर्तन दो सौ पचास करोड़ रुपए से अधिक नहीं है।

2. सूक्ष्म, लघु या मध्यम उद्यम के अंतर्गत शामिल होना:--

(1) कोई व्यक्ति जो सूक्ष्म, लघु या मध्यम उद्यम स्थापित करने की आशय रखता है, स्व-घोषणा के आधार पर उद्यम रजिस्ट्रीकरण पोर्टल में ऑनलाइन उद्यम रजिस्ट्रीकरण के लिए आवेदन कर सकेगा जिसमें दस्तावेज, कागजात, प्रमाणपत्रों या सबूत को अपलोड करने की कोई आवश्यकता नहीं है।

(2) रजिस्ट्रीकरण के समय उद्यम (जिसे उद्यम रजिस्ट्रीकरण पोर्टल में "उद्यम" कहा गया है) को "उद्यम रजिस्ट्रीकरण संख्या" के रूप में ज्ञात एक स्थायी पहचान संख्या दी जाएगी ।

(3) रजिस्ट्रीकरण प्रक्रिया पूरी होने पर "उद्यम रजिस्ट्रीकरण प्रमाण पत्र" अर्थात् एक ई-प्रमाणपत्र जारी किया जाएगा।

3. वर्गीकरण के लिए विनिधान और आवर्तन के संबंध में समेकित मापदंड-

(1) किसी उद्यम को सूक्ष्म, लघु या मध्यम के रूप में वर्गीकरण के लिए विनिधान और आवर्तन का एक समेकित मापदंड लागू होगा।

(2) यदि कोई उद्यम अपनी वर्तमान श्रेणी के लिए विनिधान या आवर्तन के दोनों मानदंड में से किसी अधिकतम सीमा को पार करता है, तो वह उस श्रेणी में अस्तित्वहीन हो जाएगा तथा उसे अगली उच्चतर श्रेणी में रखा जाएगा किन्तु किसी भी उद्यम को तब तक निम्नतर श्रेणी में नहीं रखा जाएगा जब तक वह विनिधान तथा आवर्तन के दोनों मापदंडों में अपनी वर्तमान श्रेणी के लिए विनिर्दिष्ट अधिकतम सीमा के नीचे नहीं चला जाता हो।

(3) वस्तु और सेवा कर पहचान संख्या (जीएसटीआईएन) सहित सभी इकाइयां, जिन्हें समान स्थायी खाता संख्या (पैन) के लिए सूचीबद्ध किया गया है, को सामूहिक रूप से एक उद्यम के रूप में माना जाएगा और ऐसी सभी इकाइयों के लिए विनिधान और आवर्तन संबंधी आंकड़ों पर सामूहिक रूप से ध्यान दिया जाएगा तथा सूक्ष्म, लघु या मध्यम के रूप में श्रेणी का विनिश्चय करने के लिए केवल कुल मूल्य पर विचार किया जाएगा।

4. संयंत्र और मशीनरी या उपस्कर में विनिधान की गणना:-

(1) संयंत्र और मशीनरी या उपस्कर में विनिधान की गणना को आय कर अधिनियम, 1961 के तहत फाइल किए गए पूर्ववर्ती वर्षों के आयकर रिटर्न (आईटीआर) से जोड़ा जाएगा।

(2) नए उद्यम की दशा में, जहां कोई पूर्व आईटीआर उपलब्ध नहीं है, वहां उद्यम के संप्रवर्तक के स्व-घोषणा के आधार पर विनिधान किया जाएगा और ऐसी छूट उस वित्त वर्ष में 31 मार्च के पश्चात समाप्त हो जाएगी जिसमें वह उद्यम अपना पहला आईटीआर फाइल करता है।

(3) उद्यम के "संयंत्र और मशीनरी या उपस्कर" का वही अर्थ होगा जो आयकर अधिनियम, 1961 के अधीन विरचित आयकर नियम, 1962 में संयंत्र और मशीनरी में उसका है और इसमें सभी मूर्त अस्तियाँ (भूमि और भवन, फर्नीचर और फिटिंग से भिन्न) शामिल होंगी।

(4) यदि उद्यम बिना किसी आईटीआर का नया है, तो संयंत्र और मशीनरी या उपस्कर की खरीद (इन्वॉइस) मूल्य, चाहे पहली बार या दूसरी बार खरीदा गया हो, माल और सेवा कर (जीएसटी) को छोड़कर, स्व-प्रकटीकरण के आधार पर हिसाब में लिया जाएगा।

(5) अधिनियम की धारा 7 की उप-धारा (1) के स्पष्टीकरण I में निर्दिष्ट कुछ वस्तुओं की लागत को संयंत्र और मशीनरी में विनिधान की राशि की गणना से बाहर रखा जाएगा।

5. आवर्तन की गणना—

(1) वर्गीकरण के प्रयोजन के लिए कोई उद्यम, चाहे वह सूक्ष्म, लघु या मध्यम हो, के आवर्तन की गणना करते समय माल या सेवाओं या दोनों के निर्यात को बाहर रखा जाएगा।

(2) उद्यम के लिए आवर्तन और निर्यात आवर्तन के संबंध में जानकारी आयकर अधिनियम या केंद्रीय माल और सेवा अधिनियम (सीजीएसटी अधिनियम) और जीएसटीआईएन से संबद्ध होगी।

(3) ऐसे उद्यम के आवर्तन संबंधी आंकड़े, जिनके पास पैन नहीं है, को 31 मार्च, 2021 तक की अवधि के लिए स्व-घोषणा के आधार पर माना जाएगा और उसके पश्चात्, पैन और जीएसटीआईएन अनिवार्य होगा।

6. रजिस्ट्रीकरण की प्रक्रिया—

(1) रजिस्ट्रीकरण के लिए प्ररूप उद्यम रजिस्ट्रीकरण पोर्टल में उपलब्ध कराया जाएगा।

(2) उद्यम रजिस्ट्रीकरण फाइल करने के लिए कोई फीस नहीं होगा।

(3) उद्यम रजिस्ट्रीकरण के लिए आधार संख्या अपेक्षित होगी।

(4) आधार संख्या स्वामित्व फर्म के मामले में स्वत्वधारी की होगी, भागीदारी फर्म के मामले में प्रबंधक भागीदार की और हिंदू अविभक्त कुटुंब (एचयूएफ) के मामले में कर्ता की होगी।

(5) कंपनी या सीमित देयता भागीदारी या किसी सहकारी समिति या सोसाइटी या ट्रस्ट के मामले में, संगठन या उसके प्राधिकृत हस्ताक्षरकर्ता अपने आधार संख्या सहित अपना जीएसटीआईएन और पैन उपलब्ध करेंगे।

(6) यदि कोई उद्यम पैन सहित उद्यम के रूप में सम्यकरूप से रजिस्ट्रीकृत है, तो पूर्व वर्षों की किसी भी जानकारी की कमी, जब उसके पास पैन नहीं था, को स्व-घोषणा के आधार पर भरा जाएगा।

(7) कोई भी उद्यम एक से अधिक उद्यम रजिस्ट्रीकरण फाइल नहीं करेगा:

परन्तु विनिर्माण या सेवा या दोनों प्रकार की गतिविधियों को एक उदयम रजिस्ट्रीकरण में विनिर्दिष्ट किया या जोड़ा जाए।

(8) यदि कोई जानबूझकर दुर्व्यपदेशन जानकारी देता है या उदयम रजिस्ट्रीकरण या उन्नयन प्रक्रिया में दिखाई देने वाले स्व-घोषित तथ्यों और आंकड़ों को छिपाने का प्रयास करता है, तो वह अधिनियम की धारा 27 के अधीन विनिर्दिष्ट दंड का पात्र होगा।

7. विद्यमान उद्यमों का रजिस्ट्रीकरण.---

(1) ईएम-भाग-II या यूएएम के अधीन रजिस्ट्रीकृत सभी विद्यमान उद्यम 1 जुलाई, 2020 को या उसके पश्चात् उद्यम रजिस्ट्रीकरण पोर्टल पर फिर से रजिस्ट्रीकरण करेंगे।

(2) 30 जून, 2020 तक रजिस्ट्रीकृत सभी उद्यमों को इस अधिसूचना के अनुसार फिर से वर्गीकृत किया जाएगा।

(3) 30 जून, 2020 से पहले रजिस्ट्रीकृत विद्यमान उद्यम केवल 31 मार्च, 2021 तक की अवधि के लिए विधिमान्य रहेंगे।

(4) सूक्ष्म, लघु और मध्यम उद्यम मंत्रालय के अधीन किसी अन्य संगठन के साथ रजिस्ट्रीकृत उद्यम, उद्यम रजिस्ट्रीकरण के अधीन स्वयं को रजिस्ट्रीकृत करेंगे।

8. सूचना का अद्यतन और वर्गीकरण में संक्रमण अवधि--

(1) उद्यम रजिस्ट्रीकरण संख्या वाला कोई उद्यम पूर्ववर्ती वित्तीय वर्ष के लिए आईटीआर और जीएसटी रिटर्न के ब्यौरे सहित उद्यम रजिस्ट्रीकरण पोर्टल में ऑनलाइन अपनी सूचना तथा ऐसी अन्य अतिरिक्त सूचना, जो अपेक्षित हो, स्व-घोषणा के आधार पर अद्यतन करेगा।

(2) ऑनलाइन उद्यम रजिस्ट्रीकरण पोर्टल में विनिर्दिष्ट अवधि के भीतर सुसंगत जानकारी अद्यतन करने में विफल होने पर उसका स्तर रद्द किए जाने के लिए उद्यम स्वयं जिम्मेदार होगा।

(3) प्रदान की गई जानकारी या आईटीआर या जीएसटी रिटर्न सहित सरकारी स्रोतों से प्राप्त की गई जानकारी के आधार पर उद्यम के वर्गीकरण को अद्यतन किया जाएगा।

(4) किसी उद्यम की क्रमिक वृद्धि (निम्नतर से उच्चतर श्रेणी में) अथवा क्रमिक ह्रास (निम्नतर श्रेणी की ओर अग्रसर होना) की स्थिति में उद्यम को उसके स्तर में होने वाले परिवर्तन के बारे में सूचित किया जाएगा।

(5) संयंत्र और मशीनरी या उपस्कर में विनिधान या आवर्तन अथवा दोनों में उच्चतर परिवर्तन तथा परिणामस्वरूप पुन: वर्गीकरण की स्थिति में उद्यम रजिस्ट्रीकरण के वर्ष के समाप्त होने से लेकर एक वर्ष की समाप्ति तक अपने वर्तमान स्तर को बरकरार रखेगा।

(6) किसी उद्यम के क्रमिक ह्रास की स्थिति में, चाहे वह पुन: वर्गीकरण के परिणामस्वरूप हुआ हो या संयंत्र और मशीनरी अथवा उपस्कर में विनिधान या आवर्तन में वास्तविक परिवर्तन अथवा दोनों के कारण हुआ हो तथा चाहे उद्यम अधिनियम के अधीन रजिस्ट्रीकृत हो अथवा नहीं, उद्यम वित्तीय वर्ष की समाप्ति तक अपनी वर्तमान श्रेणी में बना रहेगा तथा उसे ऐसे परिवर्तन वाले वर्ष के पश्चात् के वित्तीय वर्ष के 1 अप्रैल से परिवर्तित स्तर का लाभ प्रदान किया जाएगा।

9. उद्यमों की सुविधा और उनकी शिकायतों का निवारण—

(1) विभिन्न संस्थाओं और विकास संस्थाओं (एमएसएमईडीआई) सहित सूक्ष्म, लघु और मध्यम उद्यम मंत्रालय के कार्यालयों में कार्यरत चैंपियन कंट्रोल रूम रजिस्ट्रीकरण की प्रक्रिया को सुविधाजनक बनाने और सूक्ष्म, लघु और मध्यम उद्यमों को आगे सुगमता पूर्वक सभी प्रकार की संभव सहायता उपलब्ध कराने के लिए एकल खिड़की प्रणाली के रूप में कार्य करेंगे।

(2) जिला उद्योग केंद्र (डीआईसी) भी अपने-अपने जिलों में एकल खिड़की सुविधा प्रणाली के रूप में कार्य करेंगे।

(3) यदि कोई व्यक्ति किसी कारणवश जिसके अन्तर्गत आधार संख्या का न होना भी है, उद्यम रजिस्ट्रीकरण फाइल नहीं कर पाता है तो वह अपने आधार संख्या नामांकन पहचान पर्ची अथवा आधार नामांकन के अनुरोध की प्रति अथवा बैंक की फोटोयुक्त पासबुक अथवा मतदाता पहचान पत्र अथवा पासपोर्ट अथवा ड्राइविंग लाइसेंस में से किसी भी एक को लेकर उपर्युक्त किसी भी एकल खिड़की प्रणाली से उद्यम रजिस्ट्रीकरण के लिए संपर्क कर सकता है तथा एकल खिड़की प्रणाली, जिसके अंतर्गत प्रक्रिया भी है, उसकी आधार संख्या प्राप्त करने में सहायता करेगी और तत्पश्चात उद्यम रजिस्ट्रीकरण की आगे की प्रक्रिया में सहायता करेगी।

(4) किसी भी त्रुटि अथवा शिकायत के मामले में संबंधित जिले के जिला उद्योग केन्द्र का महाप्रबंधक उद्यम द्वारा दिए गए उद्यम रजिस्ट्रीकरण के ब्यौरों के सत्यापन के संबंध में जांच करेगा और तत्पश्चात अपनी आवश्यक टिप्पणी के साथ मामले को संबंधित राज्य सरकार के निदेशक अथवा आयुक्त अथवा उद्योग सचिव के पास भेजेगा जो उद्यम को नोटिस जारी करने और उसे मामले को प्रस्तुत करने का अवसर प्रदान करेगा तथा जांच के आधार पर ब्यौरों में संशोधन कर सकेगा अथवा सूक्ष्म, लघु और मध्यम उद्यम मंत्रालय से उद्यम रजिस्ट्रीकरण प्रमाण पत्र निरस्त करने की सिफारिश कर सकेगा।

[फा. सं. 21(5)/2019-पीएण्डजी/पालिसी(पार्ट-IV)]

ए. के. शर्मा, सचिव

MINISTRY OF MICRO, SMALL AND MEDIUM ENTERPRISES

NOTIFICATION

New Delhi, the 26th June, 2020

S.O. 2119(E).—In exercise of the powers conferred by sub-section (1) read with sub-section (9) of section 7 and sub-section (2) read with sub-section (3) of section 8, of the Micro, Small and Medium Enterprises Development Act, 2006, (27 of 2006), hereinafter referred to as the said Act, and in supersession of the notifications of the Government of India in the Ministry of Micro, Small and Medium Enterprises number S.O.1702 (E), dated the 1st June, 2020, S.O. 2052 (E), dated the 30th June, 2017, S.O.3322 (E), dated the 1st November, 2013 and S.O.1722 (E), dated the 5th October, 2006, published in the Gazette of India, Extraordinary, Part II, Section 3, Sub-Section (ii), except as respects things done or omitted to be done before such supersession, the Central Government, after obtaining the recommendations of the Advisory Committee in this behalf, hereby notifies certain criteria for classifying the enterprises as micro, small and medium enterprises and specifies the form and procedure for filing the memorandum (hereafter in this notification to be known as "Udyam Registration"), with effect from the 1st day of July, 2020, namely:--

1. Classification of enterprises.-An enterprise shall be classified as a micro, small or medium enterprise on the basis of the following criteria, namely:--

(i) a micro enterprise, where the investment in plant and machinery or equipment does not exceed one crore rupees and turnover does not exceed five crore rupees;

(ii) a small enterprise, where the investment in plant and machinery or equipment does not exceed ten crore rupees and turnover does not exceed fifty crore rupees; and

(iii) a medium enterprise, where the investment in plant and machinery or equipment does not exceed fifty crore rupees and turnover does not exceed two hundred and fifty crore rupees.

2. Becoming a micro, small or medium enterprise.--

(1) Any person who intends to establish a micro, small or medium enterprise may file Udyam Registration online in the Udyam Registration portal, based on self-declaration with no requirement to upload documents, papers, certificates or proof.

(2) On registration, an enterprise (referred to as "Udyam" in the Udyam Registration portal) will be assigned a permanent identity number to be known as "Udyam Registration Number".

(3) An e-certificate, namely, "Udyam Registration Certificate" shall be issued on completion of the registration process.

3. Composite criteria of investment and turnover for classification.--

(1) A composite criterion of investment and turnover shall apply for classification of an enterprise as micro, small or medium.

(2) If an enterprise crosses the ceiling limits specified for its present category in either of the two criteria of investment or turnover, it will cease to exist in that category and be placed in the next higher category but no enterprise shall be placed in the lower category unless it goes below the ceiling limits specified for its present category in both the criteria of investment as well as turnover.

(3) All units with Goods and Services Tax Identification Number (GSTIN) listed against the same Permanent Account Number (PAN) shall be collectively treated as one enterprise and the turnover and investment figures for all of such entities shall be seen together and only the aggregate values will be considered for deciding the category as micro, small or medium enterprise.

4. Calculation of investment in plant and machinery or equipment.--

(1) The calculation of investment in plant and machinery or equipment will be linked to the Income Tax Return (ITR) of the previous years filed under the Income Tax Act, 1961.

(2) In case of a new enterprise, where no prior ITR is available, the investment will be based on self-declaration of the promoter of the enterprise and such relaxation shall end after the 31st March of the financial year in which it files its first ITR.

(3) The expression "plant and machinery or equipment" of the enterprise, shall have the same meaning as assigned to the plant and machinery in the Income Tax Rules, 1962 framed under the Income Tax Act, 1961 and shall include all tangible assets (other than land and building, furniture and fittings).

(4) The purchase (invoice) value of a plant and machinery or equipment, whether purchased first hand or second hand, shall be taken into account excluding Goods and Services Tax (GST), on self-disclosure basis, if the enterprise is a new one without any ITR.

(5) The cost of certain items specified in the *Explanation I* to sub-section (1) of section 7 of the Act shall be excluded from the calculation of the amount of investment in plant and machinery.

5. Calculation of turnover.--

(1) Exports of goods or services or both, shall be excluded while calculating the turnover of any enterprise whether micro, small or medium, for the purposes of classification.

(2) Information as regards turnover and exports turnover for an enterprise shall be linked to the Income Tax Act or the Central Goods and Services Act (CGST Act) and the GSTIN.

(3) The turnover related figures of such enterprise which do not have PAN will be considered on self-declaration basis for a period up to 31st March, 2021 and thereafter, PAN and GSTIN shall be mandatory.

6. Registration process.—

(1) The form for registration shall be as provided in the Udyam Registration portal.

(2) There will be no fee for filing Udyam Registration.

(3) Aadhaar number shall be required for Udyam Registration.

(4) The Aadhaar number shall be of the proprietor in the case of a proprietorship firm, of the managing partner in the case of a partnership firm and of a karta in the case of a Hindu Undivided Family (HUF).

(5) In case of a Company or a Limited Liability Partnership or a Cooperative Society or a Society or a Trust, the organisation or its authorised signatory shall provide its GSTIN and PAN along with its Aadhaar number.

(6) In case an enterprise is duly registered as an Udyam with PAN, any deficiency of information for previous years when it did not have PAN shall be filled up on self-declaration basis.

(7) No enterprise shall file more than one Udyam Registration:

Provided that any number of activities including manufacturing or service or both may be specified or added in one Udyam Registration.

(8) Whoever intentionally misrepresents or attempts to suppress the self-declared facts and figures appearing in the Udyam Registration or updation process shall be liable to such penalty as specified under section 27 of the Act.

7. Registration of existing enterprises.---

(1) All existing enterprises registered under EM–Part-II or UAM shall register again on the Udyam Registration portal on or after the 1st day of July, 2020.

(2) All enterprises registered till 30th June, 2020, shall be re-classified in accordance with this notification.

(3) The existing enterprises registered prior to 30th June, 2020, shall continue to be valid only for a period up to the 31stday of March, 2021.

(4) An enterprise registered with any other organisation under the Ministry of Micro, Small and Medium Enterprises shall register itself under Udyam Registration.

8. Updation of information and transition period in classification.--

(1) An enterprise having Udyam Registration Number shall update its information online in the Udyam Registration portal, including the details of the ITR and the GST Return for the previous financial year and such other additional information as may be required, on self-declaration basis.

(2) Failure to update the relevant information within the period specified in the online Udyam Registration portal will render the enterprise liable for suspension of its status.

(3) Based on the information furnished or gathered from Government's sources including ITR or GST return, the classification of the enterprise will be updated.

(4) In case of graduation (from a lower to a higher category) or reverse-graduation (sliding down to lower category) of an enterprise, a communication will be sent to the enterprise about the change in the status.

(5) In case of an upward change in terms of investment in plant and machinery or equipment or turnover or both, and consequent re-classification, an enterprise will maintain its prevailing status till expiry of one year from the close of the year of registration.

(6) In case of reverse-graduation of an enterprise, whether as a result of re-classification or due to actual changes in investment in plant and machinery or equipment or turnover or both, and whether the enterprise is registered under the Act or not, the enterprise will continue in its present category till the closure of the financial year and it will be given the benefit of the changed status only with effect from 1st April of the financial year following the year in which such change took place.

9. Facilitation and grievance redressal of enterprises.--

(1) The Champions Control Rooms functioning in various institutions and offices of the Ministry of Micro, Small and Medium Enterprises including the Development Institutes (MSME-DI) shall act as Single Window Systems for facilitating the registration process and further handholding the micro, small and medium enterprises in all possible manner.

(2) The District Industries Centres (DICs) will also act as Single Window facilitation Systems in their Districts.

(3) Any person who is not able to file the Udyam Registration for any reason including for lack of Aadhaar number, may approach any of the above Single Window Systems for Udyam Registration purposes with his Aadhaar enrolment identity slip or copy of Aadhaar enrolment request or bank photo pass book or voter identity card or passport or driving licence and the Single Window Systems will facilitate the process including getting an Aadhaar number and thereafter in the further process of Udyam Registration.

(4) In case of any discrepancy or complaint, the General Manager of the District Industries Centre of the concerned District shall undertake an enquiry for verification of the details of Udyam Registration submitted by the enterprise and thereafter forward the matter with necessary remarks to the Director or Commissioner or Industry Secretary concerned of the State Government who after issuing a notice to the enterprise and after giving an opportunity to present its case and based on the findings, may amend the details or recommend to the Ministry of Micro, Small or Medium Enterprises, Government of India, for cancellation of the Udyam Registration Certificate.

[F. No. 21(5)/2019-P&G/Policy (Pt-IV)]

A. K. SHARMA, Secy.

Uploaded by Dte. of Printing at Government of India Press, Ring Road, Mayapuri, New Delhi-110064
and Published by the Controller of Publications, Delhi-110054.

F.No.6/18/2019-PPD
Ministry of Finance
Department of Expenditure
Public Procurement Division

161, North Block,
New Delhi
23rd July, 2020

Office Memorandum

Subject: Insertion of Rule 144 (xi) in the General Financial Rules (GFRs), 2017

Rule 144 of the General Financial Rules 2017 entitled 'Fundamental principles of public buying', has been amended by inserting sub-rule (xi) as under:

Notwithstanding anything contained in these Rules, Department of Expenditure may, by order in writing, impose restrictions, including prior registration and/or screening, on procurement from bidders from a country or countries, or a class of countries, on grounds of defence of India, or matters directly or indirectly related thereto including national security; no procurement shall be made in violation of such restrictions.

(Sanjay Prasad)
Joint Secretary (PPD)
Email ID: js.pfc2.doe@gov.in
Telephone: 011-23093882

To,

(1) Secretaries of All Ministries/ Departments of Government of India
(2) Chief Secretaries/ Administrators of Union Territories/ National Capital Territory of Delhi

F.No.6/18/2019-PPD
Ministry of Finance
Department of Expenditure
Public Procurement Division

161, North Block,
New Delhi
23rd July, 2020

Order (Public Procurement No. 1)

Subject: Restrictions under Rule 144 (xi) of the General Financial Rules (GFRs), 2017

Attention is invited to this office OM no. 6/18/2019-PPD dated 23rd July 2020 inserting Rule 144 (xi) in GFRs 2017. In this regard, the following is hereby ordered under Rule 144 (xi) on the grounds stated therein:

Requirement of registration

1. Any bidder from a country which shares a land border with India will be eligible to bid in any procurement whether of goods, services (including consultancy services and non-consultancy services) or works (including turnkey projects) only if the bidder is registered with the Competent Authority, specified in **Annex I.**

2. This Order shall not apply to (i) cases where orders have been placed or contract has been concluded or letter/notice of award/ acceptance (LoA) has been issued on or before the date of this order; and (ii) cases falling under **Annex II**.

Transitional cases

3. Tenders where no contract has been concluded or no LoA has been issued so far shall be handled in the following manner: -

   a) *In tenders which are yet to be opened, or where evaluation of technical bid or the first exclusionary qualificatory stage (i.e. the first stage at which the qualifications of tenderers are evaluated and unqualified bidders are excluded) has not been completed*: No contracts shall be placed on bidders from such countries. Tenders received from bidders from such countries shall be dealt with as if they are non-compliant with the tender conditions and the tender shall be processed accordingly.

   b) *If the tendering process has crossed the first exclusionary qualificatory stage*: If the qualified bidders include bidders from such countries, the

entire process shall be scrapped and initiated *de novo*. The *de novo* process shall adhere to the conditions prescribed in this Order.

c) As far as practicable, and in cases of doubt about whether a bidder falls under paragraph 1, a certificate shall be obtained from the bidder whose bid is proposed to be considered or accepted, in terms of paras 8, 9 and 10 read with para 1 of this Order.

Incorporation in tender conditions

4. In tenders to be issued after the date of this order, the provisions of paragraph 1 and of other relevant provisions of this Order shall be incorporated in the tender conditions.

Applicability

5. Apart from Ministries / Departments, attached and subordinate bodies, notwithstanding anything contained in Rule 1 of the GFRs 2017, this Order shall also be applicable
   a. to all Autonomous Bodies;
   b. to public sector banks and public sector financial institutions; and
   c. subject to any orders of the Department of Public Enterprises, to all Central Public Sector Enterprises; and
   d. to procurement in Public Private Partnership projects receiving financial support from the Government or public sector enterprises/ undertakings.
   e. Union Territories, National Capital Territory of Delhi and all agencies/ undertakings thereof

Definitions

6. "Bidder" for the purpose of this Order (including the term 'tenderer', 'consultant' 'vendor' or 'service provider' in certain contexts) means any person or firm or company, including any member of a consortium or joint venture (that is an association of several persons, or firms or companies), every artificial juridical person not falling in any of the descriptions of bidders stated hereinbefore, including any agency, branch or office controlled by such person, participating in a procurement process.

7. "Tender" for the purpose of this Order will include other forms of procurement, except where the context requires otherwise.

8. "Bidder from a country which shares a land border with India" for the purpose of this Order means

a) An entity incorporated, established or registered in such a country; or
b) A subsidiary of an entity incorporated, established or registered in such a country; or
c) An entity substantially controlled through entities incorporated, established or registered in such a country; or
d) An entity whose *beneficial owner* is situated in such a country; or
e) An Indian (or other) agent of such an entity; or
f) A natural person who is a citizen of such a country; or
g) A consortium or joint venture where any member of the consortium or joint venture falls under any of the above

9. "Beneficial owner" for the purpose of paragraph 8 above will be as under:

(i) In case of a company or Limited Liability Partnership, the beneficial owner is the natural person(s), who, whether acting alone or together, or through one or more juridical person(s), has a controlling ownership interest or who exercises control through other means.
Explanation—

a. "Controlling ownership interest" means ownership of, or entitlement to, more than twenty-five per cent of shares or capital or profits of the company;

b. "Control" shall include the right to appoint the majority of the directors or to control the management or policy decisions, including by virtue of their shareholding or management rights or shareholders agreements or voting agreements;

(ii) In case of a partnership firm, the beneficial owner is the natural person(s) who, whether acting alone or together, or through one or more juridical person, has ownership of entitlement to more than fifteen percent of capital or profits of the partnership;

(iii) In case of an unincorporated association or body of individuals, the beneficial owner is the natural person(s), who, whether acting alone or together, or through one or more juridical person, has ownership of or entitlement to more than fifteen percent of the property or capital or profits of such association or body of individuals;

(iv) Where no natural person is identified under (i) or (ii) or (iii) above, the beneficial owner is the relevant natural person who holds the position of senior managing official;

(v) In case of a trust, the identification of beneficial owner(s) shall include identification of the author of the trust, the trustee, the beneficiaries with fifteen percent or more interest in the trust and any other natural person exercising ultimate effective control over the trust through a chain of control or ownership.

10. "Agent" for the purpose of this Order is a person employed to do any act for another, or to represent another in dealings with third persons.

Sub-contracting in works contracts

11. In works contracts, including turnkey contracts, contractors shall not be allowed to sub-contract works to any contractor from a country which shares a land border with India unless such contractor is registered with the Competent Authority. The definition of "contractor from a country which shares a land border with India" shall be as in paragraph 8 above. This shall not apply to sub-contracts already awarded on or before the date of this Order.

Certificate regarding compliance

12. A certificate shall be taken from bidders in the tender documents regarding their compliance with this Order. If such certificate given by a bidder whose bid is accepted is found to be false, this would be a ground for immediate termination and further legal action in accordance with law.

Validity of registration

13. In respect of tenders, registration should be valid at the time of submission of bids and at the time of acceptance of bids. In respect of supply otherwise than by tender, registration should be valid at the time of placement of order. If the bidder was validly registered at the time of acceptance / placement of order, registration shall not be a relevant consideration during contract execution.

Government E-Marketplace

14. The Government E-Marketplace shall, as soon as possible, require all vendors/ bidders registered with GeM to give a certificate regarding compliance with this Order, and after the date fixed by it, shall remove non-compliant entities from GeM unless/ until they are registered in accordance with this Order.

5/12

Model Clauses/ Certificates

15. Model Clauses and Model Certificates which may be inserted in tenders / obtained from Bidders are enclosed as **Annex III**. While adhering to the substance of the Order, procuring entities are free to appropriately modify the wording of these clauses based on their past experience, local needs etc. without making any reference to this Department.

(Sanjay Prasad)
Joint Secretary (PPD)
Email ID: js.pfc2.doe@gov.in
Telephone: 011-23093882

To

(1) Secretaries of All Ministries/ Departments of Government of India for information and necessary action. They are also requested to inform these provisions to all procuring entities.

(2) Secretary, Department of Public Enterprises with a request to immediately reiterate these orders in respect of Public Enterprises.

(3) Secretary DPIIT with a request to initiate action as provided under Annex I

(4) Chief Secretaries/ Administrators of Union Territories/ National Capital Territory of Delhi

6/12

Annex I: Competent Authority and Procedure for Registration

A. The Competent Authority for the purpose of registration under this Order shall be the Registration Committee constituted by the Department for Promotion of Industry and Internal Trade (DPIIT)*.

B. The Registration Committee shall have the following members*:

   i. An officer, not below the rank of Joint Secretary, designated for this purpose by DPIIT, who shall be the Chairman;
   ii. Officers (ordinarily not below the rank of Joint Secretary) representing the Ministry of Home Affairs, Ministry of External Affairs, and of those Departments whose sectors are covered by applications under consideration;
   iii. Any other officer whose presence is deemed necessary by the Chairman of the Committee.

C. DPIIT shall lay down the method of application, format etc. for such bidders as stated in para 1 of this Order.

D. On receipt of an application seeking registration from a bidder from a country covered by para 1 of this Order, the Competent Authority shall first seek political and security clearances from the Ministry of External Affairs and Ministry of Home Affairs, as per guidelines issued from time to time. Registration shall not be given unless political and security clearance have both been received.

E. The Ministry of External Affairs and Ministry of Home Affairs may issue guidelines for internal use regarding the procedure for scrutiny of such applications by them.

F. The decision of the Competent Authority, to register such bidder may be for all kinds of tenders or for a specified type(s) of goods or services, and may be for a specified or unspecified duration of time, as deemed fit. The decision of the Competent Authority shall be final.

G. Registration shall not be granted unless the representatives of the Ministries of Home Affairs and External Affairs on the Committee concur*.

H. Registration granted by the Competent Authority of the Government of India shall be valid not only for procurement by Central Government and its agencies/ public enterprises etc. but **also for procurement by State Governments and their agencies/ public enterprises etc. No fresh registration at the State level shall be required**.

I. The Competent Authority is empowered to cancel the registration already granted if it determines that there is sufficient cause. Such cancellation by itself, however, will not affect the execution of contracts already awarded. Pending cancellation, it may also suspend the registration of a bidder, and the bidder shall not be eligible to bid in any further tenders during the period of suspension.

J. For national security reasons, the Competent Authority shall not be required to give reasons for rejection / cancellation of registration of a bidder.

K. In transitional cases falling under para 3 of this Order, where it is felt that it will not be practicable to exclude bidders from a country which shares a land border with India, a reference seeking permission to consider such bidders shall be made by the procuring entity to the Competent Authority, giving full information and detailed reasons. The Competent Authority shall decide whether such bidders may be considered, and if so shall follow the procedure laid down in the above paras.

L. Periodic reports on the acceptance/ refusal of registration during the preceding period may be required to be sent to the Cabinet Secretariat. Details will be issued separately in due course by DPIIT.

[*Note:

i. In respect of application of this Order to procurement by/ under State Governments, all functions assigned to DPIIT shall be carried out by the State Government concerned through a specific department or authority designated by it. The composition of the Registration Committee shall be as decided by the State Government and paragraph G above shall not apply. However, the requirement of **political and security clearance as per para D shall remain and no registration shall be granted without such clearance**.

ii. Registration granted by State Governments shall be valid only for procurement by the State Government and its agencies/ public enterprises etc. and shall not be valid for procurement in other states or by the Government of India and their agencies/ public enterprises etc.]

8/12

Annex II: Special Cases

A. Till 31st December 2020, procurement of medical supplies directly related to containment of the Covid-19 pandemic shall be exempt from the provisions of this Order.

B. *Bona fide* procurements made through GeM without knowing the country of the bidder till the date fixed by GeM for this purpose, shall not be invalidated by this Order.

C. *Bona fide* small procurements, made without knowing the country of the bidder, shall not be invalidated by this Order.

D. In projects which receive international funding with the approval of the Department of Economic Affairs (DEA), Ministry of Finance, the procurement guidelines applicable to the project shall normally be followed, notwithstanding anything contained in this Order and without reference to the Competent Authority. Exceptions to this shall be decided in consultation with DEA.

E. This Order shall not apply to procurement by Indian missions and by offices of government agencies/ undertakings located outside India.

9/12

Annex III

Model Clause /Certificate to be inserted in tenders etc.

(While adhering to the substance of the Order, procuring entities and GeM are free to appropriately modify the wording of the clause/ certificate based on their past experience, local needs etc.)

Model Clauses for Tenders

I. Any bidder from a country which shares a land border with India will be eligible to bid in this tender only if the bidder is registered with the Competent Authority.

II. "Bidder" (including the term 'tenderer', 'consultant' or 'service provider' in certain contexts) means any person or firm or company, including any member of a consortium or joint venture (that is an association of several persons, or firms or companies), every artificial juridical person not falling in any of the descriptions of bidders stated hereinbefore, including any agency branch or office controlled by such person, participating in a procurement process.

III. "Bidder from a country which shares a land border with India" for the purpose of this Order means: -

a. An entity incorporated, established or registered in such a country; or
b. A subsidiary of an entity incorporated, established or registered in such a country; or
c. An entity substantially controlled through entities incorporated, established or registered in such a country; or
d. An entity whose *beneficial owner* is situated in such a country; or
e. An Indian (or other) agent of such an entity; or
f. A natural person who is a citizen of such a country; or
g. A consortium or joint venture where any member of the consortium or joint venture falls under any of the above

IV. The *beneficial owner* for the purpose of (iii) above will be as under:

1. In case of a company or Limited Liability Partnership, the beneficial owner is the natural person(s), who, whether acting alone or together, or through one or more juridical person, has a controlling ownership interest or who exercises control through other means.
Explanation—

a. "Controlling ownership interest" means ownership of or entitlement to more than twenty-five per cent. of shares or capital or profits of the company;

10/12

b. "Control" shall include the right to appoint majority of the directors or to control the management or policy decisions including by virtue of their shareholding or management rights or shareholders agreements or voting agreements;

2. In case of a partnership firm, the beneficial owner is the natural person(s) who, whether acting alone or together, or through one or more juridical person, has ownership of entitlement to more than fifteen percent of capital or profits of the partnership;

3. In case of an unincorporated association or body of individuals, the beneficial owner is the natural person(s), who, whether acting alone or together, or through one or more juridical person, has ownership of or entitlement to more than fifteen percent of the property or capital or profits of such association or body of individuals;

4. Where no natural person is identified under (1) or (2) or (3) above, the beneficial owner is the relevant natural person who holds the position of senior managing official;

5. In case of a trust, the identification of beneficial owner(s) shall include identification of the author of the trust, the trustee, the beneficiaries with fifteen percent or more interest in the trust and any other natural person exercising ultimate effective control over the trust through a chain of control or ownership.

V. An Agent is a person employed to do any act for another, or to represent another in dealings with third person.

VI. *[To be inserted in tenders for Works contracts, including Turnkey contracts]* The successful bidder shall not be allowed to sub-contract works to any contractor from a country which shares a land border with India unless such contractor is registered with the Competent Authority.

Model Certificate for Tenders (for transitional cases as stated in para 3 of this Order)

"I have read the clause regarding restrictions on procurement from a bidder of a country which shares a land border with India; I hereby certify that this bidder is not from such a country and is eligible to be considered."

Model Certificate for Tenders

"I have read the clause regarding restrictions on procurement from a bidder of a country which shares a land border with India; I certify that this bidder is not from such a country or, if from such a country, has been registered with the

Competent Authority. I hereby certify that this bidder fulfills all requirements in this regard and is eligible to be considered. [Where applicable, evidence of valid registration by the Competent Authority shall be attached.]"

Model Certificate for Tenders for Works involving possibility of sub-contracting

"I have read the clause regarding restrictions on procurement from a bidder of a country which shares a land border with India and on sub-contracting to contractors from such countries; I certify that this bidder is not from such a country or, if from such a country, has been registered with the Competent Authority and will not sub-contract any work to a contractor from such countries unless such contractor is registered with the Competent Authority. I hereby certify that this bidder fulfills all requirements in this regard and is eligible to be considered. [Where applicable, evidence of valid registration by the Competent Authority shall be attached.]"

Model Certificate for GeM:

"I have read the clause regarding restrictions on procurement from a bidder of a country which shares a land border with India; I certify that this vendor/ bidder is not from such a country or, if from such a country, has been registered with the Competent Authority. I hereby certify that this vendor/ bidder fulfills all requirements in this regard and is eligible to be considered for procurement on GeM. [Where applicable, evidence of valid registration by the Competent Authority shall be attached.]"

12/12

****

FOR UDYOG AADHAR MEMORANDUM VALID TILL 31.03.2021 ONLY AFTER WHICH UDYAM REGISTRATION CERTIFICATE IS TO BE SUBMITTED TO CLAIM MSE STATUS

ANNEXURE - VIII

CERTIFICATE BY CHARTERED ACCOUNTANT ON LETTER HEAD

This is to certify that M/s …….
…… ……..(Hereinafter referred to as `Company') having its registered office at …….. is registered under MSMED Act 2006, (Entrepreneur Memorandum No ((Part-II) …… dtd …… Category: …… (Micro/Small). (Copy enclosed).

Further verified from the Books of Accounts that the investment of the company as per the latest audited financial year **…….. as per MSMED Act 2006 is as follows:**

1. For Manufacturing Enterprises: Investment in plant and machinery (i.e., original cost excluding land and building and the items specified by the Ministry of Small Industries vide its notification No.S.O.1722 (E) dated October 5, 2006:
Rs. ……..Lacs.

2. For Service Enterprises: Investment in equipment (original cost excluding land and building and furniture, fittings and other items not directly related to the service rendered or as may be notified under the MSMED Act, 2006:
Rs. ……..Lacs.

The above investment of Rs. …… Lacs in within permissible limit of Rs…… Lacs for……..Micro / Small (Strike off which is not applicable) Category under MSMED Act 2006.

(or)

The company has been graduated from its original category (Micro/Small) (Strike off which is not applicable) and the date of graduation of such enterprise from its original category is ……(dd/mm/yy) which is within the period of 3 years from the date of graduation of such enterprise from its original category as notified vide S.O.No.3322(E) dated 01.11.2013 published in the gazette notification dated 04.11.2013 by Ministry of MSME.

Date:
(Signature)
Name -
Membership Number -

Seal of Chartered Accountant

ANNEXURE-VIII(A): IF MSE STATUS IS CLAIMED THROUGH UDYAM REGISTRATION CERTIFICATE, NO CHARTERETED ACCOUNTANT(CA) CERTIFICATE IS REQUIRED

ANNEXURE-A

On Bidder Letter Head

Date:

To,

M/s Bharat Heavy Electricals Ltd.
Electronics Division, Mysore Road,'
Bangalore – 560026

Sub: Model Clause / Certificate as per Annex-III (Tenders) of Restrictions Under Rule 144 (xi) of the General Financial Rules (GFRs) 2017, Dated 23.07.2020.

Ref: BHEL Tender / RFQ / NIT Number .....

I (authorized signatory for M/s .....) have read the clause regarding restrictions on procurement from a bidder of a country which shares a land border with India , we certify that this bidder M/s .....[Vendor Name & address] is not from such a country or , if from such a country , has been registered with the competent authority . We hereby certify that we fulfill all requirements in this regard and is eligible to be considered [attach evidence of valid registration certificate with competent authority].

For M/s .....

Authorized Signatory
(With company seal & Name)

ANNEXURE-B: CERTIFICATE FOR LOCAL CONTENT
(Self Certificate To be issued on Letter Head of VENDOR)

In line with latest and subsequent amendments of Government Public Procurement Order No. P-45021/2/2017-BE-II dt. 15.06.2017, P-45021/2/2017-PP (BE-II) dated 28.05.2018

AND

Office Memorandum issued by MNRE Ref No.146/57/2018-P&C dated 11/12/2018

AND

Order No.P-45021/2/2017-PP (BE-II) dated 29.05.2019 issued by Ministry of Commerce and Industry

AND

Notification No. P-45021/2/2017-PP(BE-II) dtd:4th Jun, 2020 issued by Ministry of Commerce and Industry and any subsequent orders applicable.

AND

Order No. P-45021/2/2017-PP(BE-II) dt 16.09.2020 issued by Ministry of Commerce and Industry

we hereby certify that

……

(Supplier name) are local supplier meeting requirement of minimum local content of ___(%) defined in as above orders for the material against Enquiry No.

AKPBOS0022 for Supply of MMS Super Structure for GSECL Raghanaesda Phase-1 and GSECL Raghanesda Phase-2 SPV Projects

Details of location at which local value addition will be made is as follows:

……

……

……

We also understand, false declarations will be in breach of the Code of Integrity under Rule 175(1)(i)(h) of the General Financial Rules for which a bidder or its successors can be debarred for up to two years as per Rule 151 (iii) of the General Financial Rules along with such other actions as may be permissible under law.

Seal and Signature of Authorized signatory with date