Bharat Heavy Electricals Limited
(A Government of India Undertaking)
BOILER AUXILIARIES PLANT
RANIPET – 632 406, INDIA

Phone No:04172-284975, 4698
E-mail: deepeshverma@bhel.in
mpcsekhar@bhel.in

WORKS CONTRACT MANAGEMENT DEPARTMENT

INVITING TENDER	
Tender Notice No	**9800008E , DT: 27.05.2020**
Name of work	"Consultancy Services for Design and Drafting of Foundation and Civil Works for 'Refurbishment of FGD System' at NTPC Bongaigaon 3x250MW, Kokrajhar Dist., Assam"
Type of tender	Open tender (Two-part bid).
Period of contract	210 Calendar Days
Earnest Money Deposit (EMD) Amount	Rs.31,600/- (Rupees Thirty-One thousand and Six hundred only)
Last date & Time for Receipt of the Tender	17.06.2020 at 14.00 hrs.
Date of Technical bid Opening	17.06.2020 at 14.30 hrs. on wards.
(Please obtain updated information from the BHEL website about the latest applicable dates & other changes if any in the tender contents)	
Date of Price Bid Opening	Bidders whose technical bids are found acceptable will be intimated separately about the status of their offers and the date of opening of Price Bid.
Place of submission of Tender	Tender Box placed in WCM Department (Engg. Building – Ground Floor (West side), BHEL –BAP- Ranipet – 632 406.
Address on the Sealed Tender Cover to be:	**Sr. Engineer / WCM DEPARTMENT** **ENGG. BUILDING –GROUND FLOOR (WEST SIDE),** **BHARAT HEAVY ELECTRICALS LIMITED** **RANIPET, VELLORE DISTRICT** **TAMIL NADU– 632 406.**
Venue of the Tender Opening	WCM DEPARTMENT

Note:

1. The Tender documents can be down loaded from BHEL website (http://www.bhel.com/tender/list_tender.php) and in Central Public Procurement Portal (CPP) website: http://eprocure.gov.in/epublish/app
2. Interested bidders may alternately collect hard copy of tender specification documents at free of cost from WCM Dept. / BHEL / Ranipet on all working days (between 10.00 to 15.00 hrs.) .
3. BHEL, Ranipet reserves the right to accept or reject any or all tenders without assigning any reasons whatsoever.
4. All corrigenda, addenda, amendments, clarifications etc. to tender specification will be hosted in the web pages (www.bhel.com **> Tender notifications > view corrigendum**) only and not in the news papers. **Bidders shall keep themselves updated with all such developments.**
5. BHEL, Ranipet reserves the right to reject any tender on the basis of unsatisfactory performance of the bidder in any on going job or any similar job in the past.

TENDERER HAS TO SIGN AND SEAL ALL THE PAGES OF TENDER DOCUMENT ALONG WITH ALL SUPPORTING DOCUMENTS.

SIGNATURE OF THE TENDERER WITH SEAL AND ADDRESS

INDEX

CHAPTER	DESCRIPTION	PAGE NO
1	QUALIFICATION REQUIREMENTS (QR)	3
2	SCOPE OF WORK	4
3	DETAILS TO BE FILLED BY THE BIDDER	7
4	IMPORTANT NOTE TO BIDDERS	8
5	GENERAL CONDITIONS OF CONTRACT	14
6	GENERAL INSTRUCTIONS TO BIDDERS	25
7	SPECIAL CONDTIONS OF CONTRACT	29
8	PART – II – PRICE BID	33

Back to Index page

SIGNATURE OF THE TENDERER
WITH SEAL AND ADDRESS

QUALIFICATION REQUIREMENTS (QR):

S NO	DESCRIPTION	BHEL REQUIREMENT	BIDDER'S CONFIRMATION
1	EMD	Rs.31,600/- (or) MSE (Micro /small) valid certificate (as per MSE Clause listed in point no.20).	DD/Ref. No. _____
2	Eligibility	Essential qualification requirement of the contractor for tender submission shall be as under: An average annual financial turnover of the contractor during the last 3 years ending on 31st March 2019 should be at least Rs. 4.74 Lakhs (excluding GST) and the bidder should submit audited balance sheet and Profit & Loss Account for the last three years (2016-17, 2017-18 & 2018-19), duly certified by charted accountant/auditor. The contractors should have experience of successfully completed works during the last 7 years as on 30.04.2020 should be any of the following three categories: a. Three similar completed works each costing not less than the amount equal to Rs. 6.32 Lakhs (excluding GST). (or) b. Two similar completed works each costing not less than the amount equal to Rs. 7.90 Lakhs (excluding GST). (or) c. One similar completed works costing not less than the amount equal to Rs.12.64 Lakhs (excluding GST). Similar completed works **means 'Civil/foundation design and detailing work for power plants or Industrial plants which shall include pile and pilecap foundation having minimum plan area of 200sqm for single pilecap (for any power plant/industrial structures or buildings).** Proof of documents for the contract executed on their name shall be attached.	
3	Document "Copies" to be submitted with tender.	a) LOA's of the works completed / being executed (**include design and drawing of single pilecap having minimum area of 200sqm).**	
		b) Work Completion certificates for the LOA's referred.	
		c) Income Tax return filed for last 3 years (i.e. for FYs 2016-17, 2017-18 & 2018-19).	
		d) Certified Balance sheet and P/L account statement by the CA/ Auditor , for the last 3 years (i.e. FYs 2016-17, 2017-18 & 2018-19).	
		e) Design and drawings of the single pile cap having area more than or equal to 200sqm (which is part of the job mentioned in 3a).	

Possession of PF registration number is not mandatory. However, the successful tenderer has to register with PF authorities and furnish the registration number before first Running Account Bill.

Note : 1.Those who are unable to comply the above points / unable to provide any of the above documents shall be technically rejected and the price bid of the rejected offers will not be opened.

2. BHEL, Ranipet reserves its right to reject the tender on account of unsatisfactory past performance by the bidder in other projects awarded under different enquiry.

4. The work executed in the own name of the bidder only will be considered for similar works executed for meeting the eligibility criteria.

5. Offers of the Contractors / Suppliers, against whom, any unit of BHEL had initiated process for banning or already banned will summarily be rejected.

Back to Index page

SIGNATURE OF THE TENDERER WITH SEAL AND ADDRESS

SCOPE OF WORK

1. Design and detailing of DCFS Absorber foundation for all three units considering the existing piling and pilecap details. Additional piles and pilecaps shall be designed and integrated with existing Pilecap to withstand the load due to new DCFS absorber.

2. Design and detailing of one Primary Hydro-cyclone Feed Tank (PHF Tank) foundation.

3. Design and detailing of foundations for various slurry/water pumps (PHF Pumps, Gypsum Bleed Pumps etc.).

4. Design and detailing for additional drains/trenches, pedestals and paving required for installing DCFS absorber with its accessories.

****

Technical Specification for scope of work

1. The design and detailing shall be done as per relevant latest IS Codes or Technical Specification by BHEL/Customer.

2. Piling and Pilecap for Circular type of absorber was already constructed at the site. Later, as part of technology amendment, Rectangular type (DCFS) Absorber is being planned to install on the same foundations.
   The DCFS Absorber can be located within the available pilecap size.
   However, preliminary analysis shows that the number of existing piles will not be sufficient for the seismic lateral loads due to new DCFS absorber. Hence, additional piles and pilecap are proposed to be installed adjacent to existing foundation and integrate the new and existing pilecap. The pile size (dia and length) and pilecap depth shall be same as that of existing foundation.

3. The connection of pilecaps will be accomplished by providing dowels on the existing pilecap by the following procedure.
   a) drilling holes as per requirement into the existing pilecaps,
   b) inserting the reinforcement rods and
   c) grouting the hole with special grouts (like Hilti RE500 or equivalent grouts).
   The reinforcement rods for new pilecap will be extended from these dowels.

4. Consultant/Contractor shall design the DCFS Absorber foundation considering the above requirements.

5A.1 STAAD/ANSYS 3D modelling (Plate modelling) and analysis and design of the integrated absorber foundations (new and existing piling and pilecap) shall be carried out by the Consultant/Contractor.

5A.2 Other structures shall be designed as per relevant IS codes as per standard practice.
For 5A.1 and 5A.2, the work shall be carried out by bidder itself. This work shall not be offloaded other agencies.

5B. Also, the bidder shall have competent resources to make the bar bending drawings and schedule in Rebar CAD 3D or equivalent softwares. Otherwise, bidder shall arrange to prepare the rebar detailing with other competent agencies.

6. Seismic Analysis of structures with Response spectrum as per relevant and latest Indian Standard (IS) Codes (using 'site specific response spectra' enclosed herewith).

7. Design of Primary Hydro cyclone Feed (PHF) Tank foundation (pile foundations).
   Size of Tank is Appx 7.0m Dia x 8.2m Ht (Loading for the tank will be provided by BHEL)
8. Design calculation and drawings of all the above shall be prepared and submitted for customer approval. BHEL/NTPC will take up to 14 days for review/approval of the documents

SIGNATURE OF THE TENDERER WITH SEAL AND ADDRESS

9. Design and detailing of All Miscellaneous Pumps (like Gypsum Bleed Pumps, PHF Pumps etc. - approximately 10 Pumps). This rate for this BOQ item is combined rate for all pumps. No extra cost will be paid for addition or deletion in number pumps.

10. The following shall also be in the scope of the consultant/contractor and the item rates shall be including of these.

a.) Detailed engineering & submission of construction drawing for approval from customer consultant

b.) Incorporating the comments / corrections as per the directions of the customer/customer consultant until getting final approval. Modifying the design as per feedback from construction site shall also be done as part of this contract.

c.) Visiting the project site in case of critical situation for assessing the site requirement / execution difficulty (Maximum 2 site visit of a designer). Site location is NTPC BgTPP, Kokrajhar District, Assam.

d.) Visiting customer office (NTPC EOC NOIDA) for discussions and clarifications (Maximum 4 visits).

11. The following input from BHEL are attached for reference only.

a) Wind Data for the site. (Annexure-WL)

b) Site seismic data. (Annexure-EQ)

c) Preliminary loading of Absorber. Final details will be provided during contract.

d) Sample drawing for Gypsum bleed Pump/Process water Pumps.

e) Sample drawing for tanks foundation.

f) Existing pile layout and pilecap drawings of Absorber foundation.

g) Tentative New Pilecap for Absorber.

12. The payment for each item will be paid for the activity done as per the following criteria.

i. 20% on submission of design & detailed drawing for first submission to NTPC# .

ii. 40% after in principle approval of design & detailed drawing from NTPC#.

iii. 30% after final approval of design & detailed drawing from NTPC#.

iv. 10% after completion of related civil works at site or 6 months from completion of this contract, whichever is earlier.

- if NTPC approval is not applicable, BHEL approval is sufficient.

13. The bidder shall carry out any minor modification (based on site feedback) in the above scope work without any additional cost implication to BHEL for 6 Months from contract end date.

14. Deliverables from Vendor:

a) Drawings to be sent in both PDF and Editable (ex. AUTOCAD Drawing) format through email.

b) Design documents to be sent in the form of STAAD/ANSYS files, PDF, Excel or Word documents through email.

The recipient email id's will be intimated during contract.

15. BHEL reserve the Right to use or modify editable files.

SIGNATURE OF THE TENDERER WITH SEAL AND ADDRESS

SL. NO.	ENQUIRY NO. 9800008E BOQ DESCRIPTION	QUANTITY	UNIT	Schedule of completion (in Calendar Days) after award of work or date of input whichever is later	Remarks
1.	Design of DCFS* Absorber foundation for Unit#1 & #3 considering the existing piling and pilecap details.(The design shall be as per the specification mentioned elsewhere. Since the design for both units is same, Payment is done for one Unit only). [*DCFS : Double Contact Flow Scrubber of rectangular shape] (Loading for the new Absorber will be provided by BHEL)	01	EACH	60 days (First Submission shall be in 20 days)	
2.	Piling and Pilecap Drawings for DCFS Absorber foundation for Unit#1 & #3.(The drawings shall be as per the specification mentioned elsewhere. Since the drawings for both units is identical, Payment is done for one Unit only)	01	EACH	60 days (First Submission shall be in 30 days)	
3.	Preparing bar bending drawings and schedule for Pile caps mentioned in Sl No 02. (3D drawing software like Rebar CAD 3D or equivalent shall be used for preparing the bar bending schedule Since the drawings for both units is identical, Payment is done for one Unit only) (Loading for the new Absorber will be provided by BHEL)	01	SET	90 days (First Submission in 75 days)	
4.	Design of DCFS Absorber foundation for Unit#2 considering the existing piling and pile cap details. (The design shall be as per the specification mentioned elsewhere).	01	EACH	75 days (First Submission shall be in 40 days)	
5.	Piling and Pile cap Drawings for DCFS Absorber foundation for Unit#2. (The drawings shall be as per the specification mentioned elsewhere)	01	EACH	75 days (First Submission shall be in 45 days)	
6.	Preparing bar bending drawings and schedule for Pile caps mentioned in Sl No 05. (3D drawing software like Rebar CAD 3D or equivalent shall be used for preparing the bar bending schedule)	01	SET	90 days (First Submission in 75 days)	
7.	Obtaining review and vetting by any of the reputed Govt Institutions (IITs, IISc, NITs, SERC) for Sl No 01, 02, 04, 05.	01	LOT	75 days	Stage wise approval shall be mutually discussed and agreed upon during contract.
8.	Design of Primary Hydro cyclone Feed(PHF) Tank foundation(pile foundations). Size of Tank is Approx. 7.0m Dia x 8.2m Ht (Loading for the tank will be provided by BHEL)	01	EACH	30 days (First Submission shall be in 10 days)	
9.	Piling and Pilecap drawing for PHF Tank foundations.	01	EACH	30 days (First Submission shall be in 10 days)	
10.	Design and detailing of All Miscellaneous Pumps (like Gypsum Bleed Pumps, PHF Pumps etc - approximately 10 Pumps).	01	SET	30 days (First Submission shall be in 10 days)	The inputs for these items are expected after 60 days after award of work
11.	Layout and Detailed drawing of Drain Trench near absorber.	01	EACH	30 days (First Submission shall be in 10 days)	The inputs for these items are expected after 75 days after award of work
12.	Modification in existing paving area and design and detailing for new pavement area	01	EACH	210 days*	This drawing shall be prepared and modified progressively as per requirement at site.
13.	Preparation and detailing of combined Civil Foundation Layout for all 3 units.(This shall include the details of the existing foundations also.)	01	EACH	210 days*	
14.	Preparing and submitting drawings for Concrete structures (pedestal, pump foundations, trenches and similar items) and its reinforcement for the design provided by BHEL. The payment will be based on the volume of RCC in 'Cubic meter' available in the prepared drawings.	25	CUM	210 days*	
	TOTAL CONTRACT PERIOD: 210 CALENDAR DAYS*				*after commencement date of contract.

Schedule of the job completion Schedule of the job completion is to be strictly adhered to, any repeated failure in meeting the schedule will result in termination of the contract.

Back to Index page

SIGNATURE OF THE TENDERER WITH SEAL AND ADDRESS

DETAILS TO BE FILLED BY THE BIDDER

S.no.	Description	To be filled by Tenderer
1.	Name of the Tenderer	
2.	Address for Communication	
3.	**Telephone , Mobile No & Mail Id.**	
4.	Details of experience in Similar Work	
5.	Copies of Audited Balance Sheet and Profit & Loss Account for "3" years (2016-17, 2017-18 & 2018-19) duly certified by Charted Accountant/Auditor.	Enclosed / Not Enclosed
6.	Has the Firm/ Proprietor or partners or directors been convicted of any criminal offence by any competent court. If so furnish particulars.	
7.	Whether the firm is individual firm or Sole proprietorship firm or partner ship firm or Hindu undivided Family or association of persons or Private Limited company or Public Limited company or any other please specify.	
8.	Whether the contractor has registered his workmen under employees State Insurance Act. If so, the Registration No./ Enrolment Number may be furnished.	
9.	PAN no and documentary proof (Photo copy has to be enclosed)	
10.	Registration under Tamil Nadu GST, GST No. (Photo copy has to be enclosed)	
11.	The GST heads under which the enlisting person registered with Excise Authorities and copy of GST registration certificate has to be enclosed	
12.	Whether the contractor has registered his workmen under Employees Provident Fund and Miscellaneous Provisions Act. (Photo copy is to be enclosed)	
13.	Income Tax returns filed acknowledgement for last 3 years (i.e. FYs 2016-17, 2017-18 & 2018-19), are to be enclosed.	
14.	Applicable GST quoted Note: Please refer clause no.12 (page no. 25) of General Instructions of this Tender regarding GST.	**Central tax@ _____%** **State tax @ _____%** **Integrated tax@ _____%** **Union territory tax@_____%**

EMD payment details: DD/Ref. No _____Dt_____ for **Amount Rs. 31,600/-**

Back to Index page

SIGNATURE OF THE TENDERER WITH SEAL AND ADDRESS

IMPORTANT NOTE TO BIDDERS

Bidders are requested to submit their offers `in a sealed cover' consisting of three inner sealed covers such as (1) EMD cover containing DD/Online payment receipt (or) MSME copy, (2) Technical Bid cover & (3) Price Bid cover, all super scribing the name of the work, Tender Number, Due date etc.

1) EMD cover shall contain requisite EMD in the form of Demand Draft (DD)/Online payment receipt. Tender without EMD / without MSME valid certificate (as per MSE Clause listed in point no.21) will be summarily rejected.

2) Technical/Qualification bid cover shall contain duly filled in qualification bid document signed by the bidder in all the pages with documentary evidences for pre-qualification such as Balance sheet, P&L A/c, experience, value of work executed in the similar nature of work etc. with duly signed and sealed by the bidder. Any bid without proper documentary evidence for pre-qualification shall not be considered for further evaluation.

3) The price bid cover shall contain price bid document (BHEL format only) duly filled in and signed by the bidder with seal in all the pages. The bidder has to quote most competitive rates for all the items in the price bid. The completed qualification bid and price bid along with requisite **EMD of Rs . 31,600 /-** for the work in the form of Demand Draft drawn from any Nationalized bank, in favor of **"BHEL,Ranipet"** payable at Ranipet (or) SBI, Mukundarayapuram Branch (Code: 7013) / Pay online and enclose the payment details in the EMD cover and shall reach the Office of the undersigned on or before 17.06.2020 at 14.00 Hrs.

4) EARNEST MONEY DEPOSIT (EMD):

Earnest Money is to be paid by each tenderer by way of Demand Draft in favour of "Bharat Heavy Electricals Limited, RANIPET-632 406" Payable at SBI, BHEL Project Branch (7013), MR Puram, Ranipet. FDR receipt from Scheduled Banks / Public Financial Institutions as defined in the Companies Act (FDR should be in the name of the contractor, a/c BHEL.

Note: MSE (micro / small only) /NSIC vendors are exempted for remittance of EMD amount for this tender. However, they have to submit CA certificate for the current year.

BHEL has now made arrangements for payment of EMD thru' Online.

The steps to make online payment is detailed as below:

(i) Visit https://www.onlinesbi.com/prelogin/icollecthome.htm
(ii) Click 'Proceed' button
(iii) Select 'Tamilnadu' in the drop-down menu under 'State of Corporate/Institution *"
(iv) Select 'PSU-PUBLIC SECTOR UNDERTAKING' in the next drop down menu under "Type of Corporate/Institution"
(v) Click 'Go' button
(vi) Select 'BHEL BAP RANIPET in the drop-down menu under "PSU-PUBLIC SECTOR UNDERTAKING'
(vii) Click 'Submit' Button
(viii) Select 'EMD 'in the drop-down menu under ´ Select Payment Category'
(ix) Now Fill in the required details and ensure correctness of data filled. Ensure that you are entering correct enquiry/tender number and other details correctly.
(x) Make payment for EMD as required in tender after entering the details and enclose copy of receipt along with tender documents. Scan and upload the receipt document in case of tender under e-procurement mode.

The above facility is in addition to the existing method.

(This earnest money deposit will be refunded to the unsuccessful Bidders after finalization of the award of work. In case of successful bidder, the earnest money will be retained as part of the Security Deposit for satisfactory completion of the work in accordance with BHEL's General Conditions of Contract enclosed. No interest will be paid on the earnest money deposit. EMD by the bidder will be forfeited if i) After opening the tender / price bid the bidder revokes his tender within the validity period or increases his earlier quoted rates ii) The bidder does not commence the work within the period as per work order / Contract. In case the Work order / Contract is silent in this regard then within 15 days after award of contract).

SIGNATURE OF THE TENDERER WITH SEAL AND ADDRESS

5) The Qualification/ Technical bid will be opened on 17.06.2020 at 14.30 hrs onwards. In case of opening day falls on holiday or happened to be declared as a holiday the receipt and opening of the Tender shall automatically fall at the same timing on the next working day. Date and time of opening of the price bid shall be intimated to those bidders who have qualified in the technical bid. The bidders or their authorized agents can participate in the tender opening for which they shall bring authorization letter for attending tender opening. Late offers & incomplete offers shall become liable for rejection.

6) **Bidders are required to submit their price bid in the BHEL format only.**

7) **Seeking clarification on Tender Specification:** Clarifications on tender specification if any may be sought by the bidders during the office hours only from the **SE/WCM- Phone no- 04172-284975/4698.**

8) All the information as called for in the various clauses and annexure of tender specification should be furnished. The details so furnished should be complete in all respects and as per the formats prescribed in the Tender specification (Statutory requirement of Contract). The bidder may have to produce original documents for verification, if so decided by BHEL.

9) Offers received with any deviation or without relevant information are liable to be rejected.

10) Price bids received in any form other than prescribed in PRICE BID are liable to be rejected.

11) **The bidder has to quote his Rate for all individual items in the Rate Schedule of Price Bid. If the bidder has not quoted the Rate for any item(s), it is considered as incomplete tender and tender can not be accepted**.

12) **The tender offer should be kept valid for 3 MONTHS from the date of technical bid opening** for acceptance by BHEL. No unsolicited revision in the tender offer shall be entertained after opening of tenders and till expiry of the validity period.

13) **Quoted rates shall be firm through out the contract period and extended contract period also and no cost escalation is allowed on any account.**

14) **The similar works executed in the own name of the bidder only will be considered for eligibility / qualification criteria.**

15) **BHEL reserves the right to increase or decrease the tendered quantity.**

16) Lowest prices received against BHEL tenders need not be the technically acceptable one, and in that case, BHEL reserves the right not to consider the same.

17) BHEL reserves the right to negotiate or refloat the tender opened, if L1 Price is not lowest acceptable price to them inter-alia other reasons.

18) BHEL reserves the right to negotiate the L1 rate.

19) The contract may be pre closed as decided by BHEL during tenure of the contract with one month prior intimation.

20) **The contract will be finalized based on the overall LOWEST value and to be awarded to single party only since split in schedules is not possible.**

21) **Proof of MSE Certificate:**

If vendor have their MSE Certificate, EMD need not to pay for this work. They have to submit CA certificate for 2018-19.

MSE suppliers can avail the intended benefits only if they submit along with the offer, attested copies of either EM II certificate having deemed validity (Five years from the date of issue of acknowledgement in EM-II) or valid NSIC certificate or EM-II certificate along with attested copy of a CA certificate (as below) where deemed validity of EM II certificate of five years has expired) applicable for the relevant financial year(latest audited). Date to be reckoned for determining the deemed validity will be the last date of bid opening (Part 1 in case of two part bid). Non submission of such documents will lead to consideration of their bid at par with other bidders. No benefit shall be applicable for this enquiry if any deficiencies in the above required documents are not submitted before price bid opening. If the tender is to be submitted through e-procurement portal, then the above required documents are to be uploaded on the portal.

Documents should be notarized or attested by a Gazettes officer.

SIGNATURE OF THE TENDERER WITH SEAL AND ADDRESS

All MSE suppliers shall continue to be in PMD with MSE status based on the EM II certificate or valid NSIC certificate. Any new supplier will be eligible for registration with BHEL as MSE supplier provided at least any one of the following documents are submitted along with application for registration.

a) Valid NSIC certificate or

b) Entrepreneurs Memorandum part II(EM II) certificate (valid based on deemed validity of 5 years) or

c) EM II certificate along with attested copy of CA certificate (as per prescribed format as below applicable for the relevant financial year(latest audited) , where the deemed validity of EM II is over.

However credentials of all MSE suppliers will be verified before considering the intended benefits for MSE suppliers as per clause9(ii) at the time of tender evaluation.

Certificate by Chartered Accountant on Letter head

This is to certify that M/s……, (hereinafter referred to as 'Company') having its registered office at……..…… is registered under MSMED Act 2006,(Entrepreneur memorandum No(Part-II)……..…… dt:……..Category:……..(Micro/Small).(Copy enclosed)

Further verified from the Books of Accounts that the investment of the company as per the latest audited financial year ……. as per MSMED Act 2006 is as follows:

1. For Manufacturing Enterprises: Investment in plant and machinery(i.e. original cost excluding land and building and the items specified by the Ministry of Small Scale Industries vide its notification No.S.O.1722(E) dated October 5, 2006:
2. Rs…….. Lacs
3. For Service Enterprises: Investment in equipment(original cost excluding land and building and furniture, fittings and other items not directly related to the service rendered or as may be notified under the MSMED Act, 2006.
   Rs……. Lacs

(Strike off whichever is not applicable)

The above investment of Rs……Lacs is within permissible limit of Rs……..……Lacs for…….Micro/Small(Strike off which is not applicable)Category under MSMED Act 2006.

Or

The company has been graduated from its original category (Micro/Small) (Strike off which is not applicable) and the date of graduation of such enterprise from its original category is……. (dd/mm/yyyy) which is within the period of 3 years from the date of graduation of such enterprise from its original category as notified vide S.O.No.3322(E) dated 01-11-2013 published in the gazette notification dated 04-11-2013 by Ministry of MSME.
Date:

(Signature)

Name:

Membership number:

Seal of Chartered Accountant:

Signature of the Tenderer with seal
(**Authorized Signatory)**

22. Taxes and Duties- Incl. GST clauses to be applicable for the tender :

i. The bidder shall arrange to send to BHEL, Ranipet along with all the required documents as in contract, Tax Invoice (Original for Recipient) along with his bills.

ii. IGST/CGST/SGST/UTGST: Rate of Tax to be quoted as extra in %

iii. Bidders to ensure correct applicability of IGST/CGST/SGST/UTGST based on the Inter / Intra state movement Supply of goods and services or both.

Taxes and duties prevalent on the contractual delivery date or the actual delivery date (in case of delay) which ever is lower shall be applicable paid. Composition Scheme to be addressed.

iv. Payment to the vendor is contingent upon Vendor complying with GST provisions and availment of Input Tax Credit by BHEL before the date of payment.

SIGNATURE OF THE TENDERER WITH SEAL AND ADDRESS

The taxes and duties that are reimbursed would be the ones applicable as on the contractual service delivery date or the amount actually paid whichever is less.
In case GST credit is delayed/ denied to BHEL, due to non/delayed receipt of goods and/or services and/or tax invoice or expiry of timeline prescribed in GST Law for availing such ITC, or any other reason not attributable to BHEL, GST amount shall be recoverable from Vendor along with interest levied/ leviable on BHEL.
vi. Invoice should mention BHEL-BAP-RANIPET GSTIN: 33AAACB4146P2ZL or GSTIN of BHEL Nodal Agency as mentioned in PO.
vii. In case of any short supply of goods or service Vendor has to raise a credit note for short supplied quantity as per GST provisions.
viii. The agency should quote the applicable taxes and duties in the technical bid as well as in price bid.
ix. In case vendor delays declaring such invoice in his return and GST credit availed by BHEL is denied or reversed subsequently as per GST law, GST amount paid by BHEL towards such ITC reversal as per GST law shall be recoverable from vendor/contractor alongwith interest levied/leviable on BHEL.
x. Any GST liability arising on BHEL under reverse charge before actual receipt of goods and or services and/or invoice thereof would be subject to recovery of interest leviable for the period between the date of such liability and actual date of eligibility of ITC based on receipt of goods, receipt of invoices and other conditions specified in GST law, as applicable.
xi. All the terms & conditions of the contract with respect to Taxes & Duties are subject to the new taxation laws introduced from time to time (e.g., GST). The terms & conditions will be modified in accordance with the provisions of new laws (e.g., GST).
xii. The Prices quoted above must be inclusive of all taxes and duties and exclusive of GST, which will be payable extra as per applicable rules and subject to Submission of documentary evidence.
xiii. Vendor shall note that the Invoice has to be raised quoting HSN Code of Goods or Accounting Code of Services or both wherever applicable.

23. a) <u>Arbitration</u>

i) All disputes between the parties to the Contract, arising out of or relation to the Contract shall after written notice by either party to the Contract to the other party be referred and resolved by an Arbitrator nominated by the Unit Head of BHEL, Ranipet

ii) The venue of Arbitration shall be Ranipet, Tamil Nadu. The arbitrator may hold meetings for convenience in such a place or places discretion.

iii) The award of the Arbitrator shall be final, conclusive and binding on both parties to the Contract.

iv) The Contractor shall, not with standing any disagreement, dispute, protest, request for arbitration, court or other proceedings, continue to perform the Services in accordance with the determinations, instructions and clarifications of BHEL.

b) Subject to the above, the appropriate court in Ranipet shall have the exclusive jurisdiction over any disputing arising out of or in connection with this Contract.

c) **<u>Risk Purchase under BHEL RISK PURCHASE SOP 10.10.2017</u>**

If the contractor fails to carry out the specified works as per the contract scope of work within the timeframe as directed by AGM/WCM or his authorized officials and continues in that state after a reasonable notice from AGM/WCM or his authorized officials, BHEL reserves the right to have the work done by any means at the Contractor's risk and expenses provided always that in the event of the cost of the work so done (as certified by Authorized signatory which is final and conclusive) being less than the contract cost, the advantage shall accrue to the BHEL and if the cost exceeds the money due to Contractor under the contract, the Contractor shall either pay the excess amount ordered by AGM/WCM or the same shall be recovered from the Contractor by other means.

The above shall be without prejudice to any other remedy that may be available to BHEL whether as per law, contract, equity or otherwise.

SIGNATURE OF THE TENDERER WITH SEAL AND ADDRESS

d) Contractor shall indemnify and keep indemnified BHEL, its other contractors and/or sub-contractors and its/their employees from all actions, proceedings, suits, claims, demands, liabilities, damages, losses, costs, charges, expenses, judgments and fines arising out of or in the course of, or caused by the execution of work under the Contract or other obligations hereunder directly or indirectly associated herewith which may arise due to:

i) Breach of law by the Contractor, or any of its sub-contractor, or any of their respective employees.
ii) Negligence or willful default by the Contractor, or any of its sub-contractor, or any of their respective employees.
iii) Failure by Contractor to proceed with Project in accordance with the determinations, instructions and clarifications of Company pending disagreement, dispute, protest, request for arbitration/ court proceedings
iv) Loss of property or death of any employee of BHEL or of its other contractors/ sub-contractors.

The above shall be without prejudice to any other remedy that may be available to BHEL whether as per law, contract, equity or otherwise.

24. FORCE MAJEURE CLAUSE: -

If, at any time during the continuance of this Contract the performance in whole or in part by either party of any obligations under this Contract shall be prevented or delayed by reason of any War, Hostile acts of the public enemy Civil Commotion, Epidemics, or Acts of God (Floods, Storm/Cyclone, Hurricane, Earth Quake etc.) then provided notice of happening of any such event is given by either party to other within 7 days from the date of occurrence therefor neither party shall by reason of such event be entitled to terminate this Contract nor shall either party have any claim for damages against the other in respect of such non-performance and delay in performance under the contract shall be resumed as soon as practicable after such event has come to an end or ceased to exist.

If the performance in whole or part of any obligation under this Contract is prevented or delayed by reason of any such event, claims for extension of time / waiver of penalty/liquidated damages shall be granted for periods considered reasonable by AGM/WCM subject to prompt notification by the contractor.

25. **All corrigenda, addenda, amendments, time extensions clarifications, etc., to the tender will be hosted on BHEL website (www.bhel.com) only. Bidders should regularly visit BHEL website to keep themselves updated.**

26. **Multiple Bids:**

The bidder in his own interest shall submit only one bid. If a bidder submits multiple bids, all the bids are liable for rejection. Bids shall be considered “Multiple” in the following circumstances:

a) Two bids by the same party.
b) If one bidder is the Affiliate of another bidder.

For the purpose of this clause “Affiliate” shall mean with respect to any Person, any other Person that, directly or indirectly, controls, is controlled by, or is under direct or indirect common control with, such Person, or is a director/ member / officer/ employee of such Person or of any Person who would otherwise qualify as an Affiliate of such Person pursuant to this definition;

“Person” for the purposes of this definition shall mean any natural person, individual, corporation, limited partnership, co-operative, general partnership, joint stock company, joint venture, association, company, trust, bank, trust company, land trust, business trust, corporate body or other organization, whether or not a legal entity."

27. Fraud Prevention Policy:

The bidder along with its associate / collaborators / sub-vendors / consultants / service providers shall strictly adhere to BHEL Fraud Prevention Policy displayed on BHEL website http://www.bhel.com and shall immediately bring to the notice of BHEL Management about fraud or suspected fraud as soon as it comes to their notice.

SIGNATURE OF THE TENDERER WITH SEAL AND ADDRESS

28. Treatment of Banned / Under-performing Vendors:
Any supplier who has been put on "Hold" or "Banned" from having business dealings with BHEL, Ranipet or any other unit of BHEL shall not submit their offer against this tender. If any such offers are received they would be summarily rejected and sent back. During the processing of tender, if any unit of BHEL puts a supplier on "Ban" then further processing of the offer will not be taken up and in case an order is placed, BHEL, Ranipet may resort at their discretion to cancel the PO either fully or partially.

29. Suspension of Business Dealings:

The bidder along with its associate / collaborators / sub-vendors / consultants / service providers shall strictly adhere to "Guidelines for Suspension of Business Dealings with Suppliers/ Contractors" AA/MM/SB/01 Rev: 02, Dt.22.07.2016 displayed on BHEL website http://www.bhel.com. (http://www.bhel.com/vender_registration/pdf/Suspension_guidelines_adbridged.pdf).

30. **SET OFF Clause**: "BHEL shall have the right to recover any money which in the sole opinion or BHEL is due from the Contractor from any money due to the Contractor under this Contract or any other contract or from the Security Deposit furnished by the Contractor under this Contract or any other contract. "

31. "Notwithstanding anything to the contrary, including, but not limited to, provisions relating to extension of time and compensation/or delay, time shall be the essence of the Contract."

32. WCM is arranging this contract as a nodal agency. Execution of work, Bill Certification, Bill passing, Payment, Penalty, Contract closing etc., is the responsibility of end user.

33. In all the matters of dispute the decision of the Additional GM/AQCS, BHEL, Ranipet shall be final binding on the tenderer / contractor. AGM / AQCS reserves all the right to reject any or all the tenders received or accept any tender or part thereof without assigning any reason therefore.

34. Discrepancy in "words " & " Figures ":

a) If, in the price structure quoted for the required goods/services/works, there is discrepancy between the unit price and the total price (which is obtained by multiplying the unit price by the quantity), the unit price shall prevail and the total price corrected accordingly, unless in the opinion of the purchaser there is an obvious misplacement of the decimal point in the unit price, in which case the total price as quoted shall govern and the unit price corrected accordingly.

b) If there is an error in a total corresponding to the addition or subtraction of subtotals, the subtotals shall prevail and the total shall be corrected; and

c) If there is a discrepancy between words and figures, the amount in words shall prevail, unless the amount expressed in words is related to an arithmetic error, in which case the amount in figures shall prevail subject of (a) and (b) above.

d) If there is such discrepancy in an offer, the same shall be conveyed to the bidder with target date up to which the bidder has to send his acceptance on the above lines and if the bidder does not agree to the decision of the purchaser, the bid is liable to be ignored.

****

Back to Index page

SIGNATURE OF THE TENDERER WITH SEAL AND ADDRESS

GENERAL CONDITIONS OF CONTRACT

1) DESPATCH INSTRUCTIONS:

1.1. This tender specification as a whole, duly furnishing all the details required and other documents as required in the following pages, shall be duly signed and sent in a sealed cover duly super scribing the name of work as given in the tender notice.

1.2. The tender shall be addressed to Officer inviting tender as indicated in the tender notice.

1.3. Tenders submitted by post shall be sent by **"REGISTERED POST WITH ACKNOWLEDGEMENT** DUE" and shall be posted with the due allowance for any postal delay. The tenders received after the due date and time of opening is liable to be rejected. Telegraphic offers and offers received by telex may not be considered.

1.4. Tenders shall be opened by authorized officer of BHEL at his office at the time and date as specified in the tender notice in the presence of such of those bidders or their authorized representatives who may be present.

1.5. The Tenders shall closely pursue all the clauses, specifications and drawings indicated in the tender documents before quoting. Should the bidder have any doubt the meanings of any portion of the tender specification or find discrepancies or omission in the drawings or the tender documents issued are in complete or shall require clarification on any of the technical aspect, scope of work etc., he shall at once contact the authority inviting the tender for clarification before the submission of the tender.

1.6. Before tendering, the bidders are advised to inspect the site of work and the environments and be well acquainted with the actual working and other prevalent conditions, facilities available, position of material and labor. No claim will be entertained later, on the ground of lack of knowledge.

1.7. Bidder must fill up all the schedules and furnish all the required information as per the instructions given in various sections of the tender specification. Each and every page of the Tender Specification must be signed and submitted along with the offers by the bidder in token of complete acceptance thereof. The information's furnished shall be completed by itself.

1.8. The bidders shall quote the rates for each item of the tender schedules in rupees and paise only. These rates shall be entered in figures as well as in words. In case of any difference in the rates quoted in figures and in words, words will be taken as the tendered rate.

1.9. All entries in the tender documents should be in one ink. Over-writing and corrections should be avoided. The Bidders concerned should duly sign for all corrections and over-writings.

2) DATA TO BE FURNISHED:

2.1. Full information shall be given by the bidder in respect of the following. Non-submission of this information may lead to rejection of the offer.

2.2. An attested copy of the Power of Attorney, in case the tender is singed by an individual other than the sole proprietor, shall also be attached. (If it is a Company or Firm, etc., Director/Managing Partner as the case may be is required to sign).

2.3. IN CASE OF AN INDIVIDUAL:

His full name, address and place and nature of business shall be indicated.

2.4. IN CASE OF PARTNERSHIP FIRMS:

The names of all the partners and their addresses be furnished along with a copy of the partnership deed/instrument of partnership duly certified by Notary Public shall be enclosed.

2.5. IN CASE OF COMPANIES:

Date and place of registration including date of commencement certificate in case of public companies (certified copies of Memorandum and Articles of Association are also to be furnished) are to be furnished.

SIGNATURE OF THE TENDERER WITH SEAL AND ADDRESS

2.6. Nature of business carried on by the Company and the provisions of the Memorandum relating there of shall be furnished.

2.7. Names and particulars including addresses of the Directors and their previous experiences shall be furnished.

2.8. A list of tools and tackles that the bidder is having and those that will be used on this job shall be furnished.

2.9. In addition to the above, the particulars required in annexure shall also be furnished.

3) EARNEST MONEY DEPOSIT (EMD) :

3.1. EMD shall be in the form of DD / Cash receipt of BHEL/ Ranipet. Tender without EMD / without valid MSME certificate will be summarily rejected. In cash of Demand Draft the same shall be drawn in favour of" **BHEL, Ranipet"** payable at Ranipet (or) SBI, Mukundarayapuram Branch (Code: 7013), Ranipet -6.

3.2. "No interest shall be payable by BHEL on Earnest Money or Security Deposit, if applicable, or any money due to the Contractor by BHEL."

3.3. Tenders received without Earnest Money in full in the manner prescribed above are liable to be rejected.

3.4. The Earnest Money Deposit of the successful tenders may be retained towards part of Security Deposit.

3.5. In the case of unsuccessful bidders, the Earnest Money will be refunded to them within a reasonable time after finalization of the tender.

3.6. Earnest Money Deposit by the bidder will be forfeited as per tender documents if the bidder:

3.7. Fails to communicate unqualified acceptance of Letter of Intent within 15 days of date of Letter of Intent.

3.8. Does not commence the work within the period as per LOI / Contract. In case the LOI/Contract is silent in this regard then within fifteen days after award of contract.

3.9. After opening of Tender, revokes / withdraws his tender within the validity period or revises / alters his earlier quoted rates / conditions.

3.10. Fails to submit SD as indicated in the Letter of Intent.

4) AUTHORISATION AND ATTESTATION:

Tenders shall be signed by persons duly authorized /empowered to do so. Certified copies of such authority and relevant documents shall be submitted along with the tenders.

5) VALIDITY OF OFFER:

The rates in the Tender shall be kept open for acceptance for a minimum period of **THREE MONTHS** from the date of tender opening. In case the Bharat Heavy Electricals Limited calls for negotiations such negotiations shall not amount to cancellation or withdrawal of the original offer, which shall be binding on the bidders.

6) EXECUTION OF CONTRACT:

The successful bidder's responsibility under this contract commences from the date of issue of the Letter of Intent by Bharat Heavy Electricals Limited. The successful bidder shall be required to execute an agreement in the prescribed from with BHEL within a reasonable time after the acceptance of his tender and in any case before submitting the first bill for payment. The expenses for completion, stamping and registration of the agreement with prescribed authority, if necessary, shall be borne by the Contractor.

7) SECURITY DEPOSIT (SD):

7.1. Upon acceptance of tender, the successful bidder within the time specified in the letter of intent must deposit the required amount of Security Deposit for satisfactory execution of work and shall not commence work under this contract before remitting security deposit except as directed by BHEL.

SIGNATURE OF THE TENDERER WITH SEAL AND ADDRESS

7.2. <u>The total amount of Security Deposit shall be as follows</u>:

SECURITY DEPOSIT shall be collected from the successful tenderer. The total amount of security deposit will be 5% of the contract value. EMD of the successful tenderer shall be converted and adjusted towards the required amount of Security Deposit.

Modes of deposit:

a. The balance amount to make up the required Security Deposit of 5% of the contract value may be accepted in the following forms:
   i) Cash (as permissible under the extant Income Tax Act)
   ii) Local cheques of Scheduled Banks (subject to realization)/ Pay Order/ Demand Draft/ Electronic Fund Transfer in favour of BHEL
   iii) Bank Guarantee from Scheduled Banks/ Public Financial Institutions as defined in the Companies Act. The Bank Guarantee format should have the approval of BHEL
   iv) Fixed Deposit Receipt issued by Scheduled Banks/ Public Financial Institutions as defined in the Companies Act (FDR should be in the name of the Contractor, a/c BHEL)
   v) Securities available from Indian Post offices such as National Savings Certificates, Kisan Vikas Patras etc. (held in the name of Contractor furnishing the security and duly endorsed/ hypothecated/ pledged, as applicable, in favour of BHEL)

   (Note: BHEL will not be liable or responsible in any manner for the collection of interest or renewal of the documents or in any other matter connected therewith)

b. At least 50% of the required Security Deposit, including the EMD, should be collected before start of the work. Balance of the Security Deposit can be collected by deducting 10% of the gross amount progressively from each of the running bills of the Contractor till the total amount of the required Security Deposit is collected.

c. If the value of work done at any time exceeds the contract value, the amount of Security Deposit shall be correspondingly enhanced and the additional Security Deposit shall be immediately deposited by the Contractor or recovered from payment/s due to the Contractor.
   The recoveries made from running bills (cash deduction towards balance SD amount) can be released against submission of equivalent Bank Guarantee in acceptable form, but only once, before completion of work, with the approval of the authority competent to award the work.

d. EMD of the successful tenderer will be converted and adjusted against security deposit.

e. EMD and security deposit shall not carry any interest.

7.2.1. EMD of the successful bidder may be converted and adjusted against the security deposit on specific request by the contractor.

7.2.2. Acceptance of security deposit as per clause (iv) & (v) above will be subject to hypothecation or endorsement on the documents in favour of BHEL. However, BHEL will not be liable or responsible in any manner for the collection of interest or renewal of the documents or in any other matter connected therewith.

7.2.3. If the value of the work done at any time exceeds the accepted agreement value, the security Deposit shall be correspondingly enhanced and the extra Security Deposit shall be immediately deposited by the Contractor or recovered from payments due to him.

7.2.4. Failure to deposit the Security Deposit within the stipulated time, may lead to forfeiture of Earnest Money and cancellation of the award of work.

7.2.5. If any part of Security Deposit of the Contractor is held in the form of approved securities it shall be kept transferred in the name of Bharat Heavy Electricals Limited, Ranipet, in such a manner that the same can be realized fully without referring to the Contractor, BHEL shall not be responsible for any depreciation in the value of the Security while in BHEL's custody or for any loss of interest thereon.

7.2.6. BHEL reserves the right to forfeiture of Security Deposit in addition to the other claims and penalties in the event of the Contractor's failure to fulfill any of the Contractual obligation including liquidation or bankruptcy of the contractor, non-payment of money payable by means of arbitration award in favour of BHEL or in the event of termination of Contract as per terms and conditions of Contract. BHEL reserves the right to set off the Security Deposit, against any claims of any other contracts with BHEL.

SIGNATURE OF THE TENDERER WITH SEAL AND ADDRESS

8.0 RETURN OF SECURITY DEPOSIT:

If the Contractor performs and completes the work in all respects to the entire satisfaction of BHEL and presents an absolute **"No Demand Certificate"** in the prescribed form and returns properties belonging to BHEL handed over, lent or hired by him for carrying out the said works, Security Deposit will be released to the Contractor after deducting all cost of expenses or other amounts that are to be paid to BHEL under this or other contracts entered into with the Contractor. **It may be noted that in no case the Security Deposit shall be refunded/released prior to passing of final bill.**

9.0 REJECTION OF TENDER AND OTHER CONDITIONS

9.1 The acceptance of tender will rest with BHEL which does not bind itself to accept the lowest tender or any tender and reserves to itself full rights for the following without assigning any reasons whatsoever.

9.1.1. To reject any or all of the bidders.

9.1.2. To award the work in part.

9.1.3. Either of the contingencies stated in (9.1.2) above to modify the time for completion suitably.

9.2. Conditional and Un witnessed tenders, tenders containing absurd or unworkable rates and amounts and tenders which are incomplete and otherwise considered defective and tenders not in accordance with the tender conditions, specifications, etc., are liable to be rejected.

9.3. If a bidder expires after the submission of his/her tender or after the acceptance of his/her tender, BHEL may at their discretion cancel such tender. If a partner of a firm expires the submission of the tender or after the acceptance of the tender, BHEL may cancel such tender at their discretion unless the firm retains its character.

9.4. BHEL will not be bound by any power of Attorney granted by the bidder or by changes in the composition of the firm made subsequent to the execution of the Contract. They may, however recognize such power of Attorney and changes after obtaining proper legal advice, the cost of which will be chargeable to the contractor concerned.

9.5. If the bidder deliberately gives wrong information in his tender, BHEL reserves the right to reject such tender at any stage or cancel the contract, if awarded. The Earnest Money/Security Deposit /any other money due shall also be forfeited.

9.6. Canvassing in any form in connection with the tender is strictly prohibited and the tender submitted by the contractor's who resort to canvassing in any form are liable to rejection.

9.7. Should a bidder or contractor or in the case of a firm or company of contractor's one or more of its partners/shareholders/Directors have a relation or relations employed in BHEL, the authority inviting tender shall be informed of the fact along with the offer, failing this BHEL may, at its sole discretion reject the tender or cancel the contract and forfeit the Earnest Money/Security Deposit.

9.8. The successful bidder should not sub-contract the part or complete work detailed in the tender specification undertaken by him without written permission of BHEL. The bidder is solely responsible to BHEL for the work awarded to him.

9.9. No deviation from the tender specification shall be acceptable to BHEL. Bidders shall confirm their unqualified acceptance of the terms and conditions by giving an undertaking to this effect in a separate letter as specified by BHEL.

10.1 DEFINITION:

The following terms shall have the meaning hereby assigned to them except where the context otherwise requires.

10.2 BHEL or (B.H.E.Ltd) shall mean Bharat Heavy Electricals Limited a Company registered under Indian Companies Act 1956, with its Registered Office at BHEL House, Siri fort, New Delhi 110 049 or its Authorized Officers or its Resident Engineer or other employees authorized to deal with any matters with which these persons are concerned on its behalf.

10.3 "GENERAL MANAGER"

Shall mean the officer in Administrative charges of contracting unit of BHEL.

10.4 "**ENGINEER**" or "ENGINEER IN CHARGE" shall mean Engineer who is in-charge for the works referred.

SIGNATURE OF THE TENDERER WITH SEAL AND ADDRESS

10.5 "**SITE**" shall mean the place or places at which the plants/equipments are to be erected and services are to be performed as per the specification of this contract.

10.6 "**CONTRACTOR**" shall mean the individual, firm or company who enters in to this contract with BHEL and shall include their executors, administrators and successor and permitted assignees.

10.7 "**CONTRACT**" or "CONTRACT DOCUMENT" shall mean/and include the agreement or work order, the accepted appendices of rates, schedules, quantities, if any and general conditions of contract, the special conditions of contract, instructions to the bidders, the drawings, the technical specifications, the special specifications, if any, the tender documents and the Letter of Intent/Acceptance Letter issued by BHEL. Any conditions or terms stipulated by the contractor in the tender document or subsequent letters shall not form part of the contract unless specially accepted in writing by BHEL, in the Letter of intent and incorporated in the agreement.

10.8 "**GENERAL AND SPECIAL CONDITIONS OF CONTRACT**" shall mean the "Instructions to Bidders and General and Special Conditions of Contract" pertaining to the work for which the bidders are called for.

10.9 "**TENDER SPECIFICATIONS**" shall mean the "SPECIFIC CONDITIONS, Technical specifications, appendices, site information's and drawings" pertaining to the work in which the bidders are required to submit their offer, Individual specification number will be assigned to each tender specification.

10.10 "**TENDER DOCUMENTS**" shall mean the General and Special Conditions of Contract (10.8) and tender specification (10.9).

10.11 "**LETTER OF INTENT**" shall mean the intimation by a letter to the bidder that the tender has been accepted in accordance with provisions contained in that letter. The responsibility of the contractor commences from the date of issue of this letter and all the terms and conditions of contract are applicable from this date.

10.12 "**COMPLETION TIME**" Shall mean the period by date specified in the acceptance of tender or date mutually agreed upon for handing over of the erected equipment/plant which is found acceptable by the Engineer being of required standard and conforming to the specifications of the contract.

10.13 "**PLANT**" shall mean and cannot the entire assembly of the plant and equipments covered by the contract.

10.14 "**EQUIPMENT**" shall mean all equipments, machinery, materials, structural, electrical and ther components of the plant covered by the contract.

10.15 "**TESTS**" shall mean and include such test or tests to be carried out on the part of the contractor as are prescribed in the contract or considered necessary by BHEL in order to ascertain the quality, workmanship, performance and efficiency of the contract work or part thereof.

10.16 "**APPROVED**" "DIRECTED" or "INSTRUCTED" shall mean approved, directed or instructed by BHEL.

10.17 "**WORK OR CONTRACT WORK**" shall mean and include supply of all categories of labour specified consumables, tools and tackles required for complete and satisfactory site transportation handling, stocking, storing, erecting, testing, and commissioning of the equipments to the entire satisfaction of BHEL.

10.18 "**SINGULAR AND PLURAL ETC**" works carrying singular number shall also include plural and vice versa, where the context so required. Words importing the masculine gender shall be taken to include the feminine gender and words imparting persons shall include any company or association or body of individuals, whether incorporated or not.

10.19 "**HEADINGS**"

The headings in these general conditions are solely for the purpose of facilitating reference and shall not be deemed to be part thereof or be taken into consideration in the interpretation or construction thereof or of the contract.

10.20 "**MONTH**" shall mean calendar month, unless specified otherwise in the tender.

10.21 "**WRITING**" shall include any manuscript typewritten or printed statement under the signature of BHEL.

SIGNATURE OF THE TENDERER WITH SEAL AND ADDRESS

10.22 LAW GOVERNING THE CONTRACT AND COURT JURISDICTION

The contract shall be governed by the Law for the time being in force in the Republic of India, and shall be subject to the Jurisdiction of the courts having Jurisdiction over RANIPET (VELLORE Dist, Tamil Nadu).

10.23 ISSUE OF NOTICE:

The Contractor shall furnish to the BHEL ENGINEER the name, designation and address of his authorized agent and all complaints, notices, communication and reference shall be deemed to have been duly given to the contractor or his authorized agent or left or posted to the address of either the contractor or of his representative and shall be deemed to have been so give in the case of posting on the day on which they would have reached such address in the ordinary course of post or on which they were so delivered of / or left.

10.24 CONTRACTOR'S SUPERVISION: The Contractor shall either himself supervise the execution of the contract or shall appoint a competent agent acceptable to the concerned executive/authorized person to act in his stead. Orders given to the Contractor's agent shall be considered to have the same force as if they have been given to the Contractor himself. The Contractor or his accredited agent shall attend when required without making any claim for doing so, either the office of the concerned executive/authorized person or the OFFICER-INCHARGE, to receive instructions. The concerned executive/authorized person shall have full powers and without assigning any reason, require the Contractor to immediately cease to employ in connection with this contract, any agent, servant or employee where continued employment is, in his opinion undesirable. The Contractor shall not be allowed any compensation on this account.

10.25 TERMINATION OF CONTRACT ON DEATH OF CONTRACTOR: Without prejudice to any of the rights or remedies under this contract, if the Contractor dies, or if the firm is dissolved or the company is liquidated BHEL shall have the option of terminating the contract without compensation to the Contractor.

10.26 SPECIAL POWER TO TERMINATION: If at any time after the award of contract, BHEL shall for any reason whatsoever not require whole or any part of the work to be carried out the concerned executive/authorized person shall give notice in writing of the fact to the Contractor who shall have no claim to any payment of compensation or otherwise howsoever on account of any profit or advantage which he might have derived from the execution of the work in full but which he did not derive in consequence of the fore-closing of the work.

10.27 The "GENERAL CONDITIONS AND INSTRUCTIONS TO TENDERERS AND SPECIAL CONDITIONS TO THE TNEDERER" shall be deemed to form an integral part of contract for the work to be entered into.

10.28 CANCELLATION OF CONTRACT FOR CORRUPT ACTS: BHEL , whose decision shall be final and conclusive, shall without prejudice to any other right or remedy which shall have accrued shall accrue thereafter to BHEL cancel the contract in any of the following cases and the Contractor shall be liable to make payment to BHEL for any loss or damage resulting from any such cancellation to the same extend as provided in the case of cancellation for default

If the Contractor shall: -

i) Offer or give or agree to give to any person in BHEL service any gift or consideration of any kind, as an inducement or reward for doing or for bearing to do or for having done or for borne to do any act, in relation to the obtaining or execution of this or any other contract for BHEL service,

OR

(ii) enter in to a contract with BHEL in connection with which commission has been paid or agreed to be paid by him or with his knowledge, unless the particulars of any such commission and the terms of payment thereof have previously been disclosed in writing to BHEL,

OR

(iii)obtain a contract with BHEL as a result of ring tendering or by non-bonafide methods of competitive tendering, without first disclosing the fact in writing to BHEL.

SIGNATURE OF THE TENDERER WITH SEAL AND ADDRESS

10.29 CANCELLATION OF CONTRACT FOR INSOLVENCY ASSIGNMENT OF TRANSFER OR SUB-LETTING OF CONTRACT

BHEL, without prejudice to any other right or remedy, which shall have accrued or shall accrue thereafter to BHEL shall cancel the contract in any of the following cases:

If the Contractor,

a) being an individual or if a firm any partner thereof shall at any time be adjudged bankrupt or have a receiving order for administration of his estate, made against him or shall take any proceedings for liquidation or composition under any bankruptcy Act or assignment of his effects of composition or arrangement for the benefit of his creditors or purport to do so, or if any application made under any Bankruptcy Act for the time being in force for the sequestration of his estate or if a trust deed be granted by him on behalf of his creditors

OR

b) being a Company, shall pass a resolution or the Court shall make an order for the liquidation of its affairs, or a receiver or Manager on-behalf of the debenture holders shall be appointed or circumstances shall arise which entitle the Court or debenture holders to appoint a receiver or Manager,

OR

c) Assigns, Transfers, Sub-lets or attempts to assign, transfer or sub-let any portion of the work without the prior written approval of the BHEL.

d) Whenever BHEL exercise the authority to cancel the contract under this conditions, BHEL may have the work done by any means at the Contractor's risks and expenses provided always that in the event of the cost of the work so done (as certified by concerned executive/authorized person which is final and conclusive) being less than the contract cost, the advantage shall accrue to the BHEL and if the cost exceeds the money due to Contractor under the contract, the Contractor shall either pay the excess amount ordered by concerned executive/authorized person or the same shall be recovered from the Contractor by other means.

e) In case BHEL carries-out the work under the provisions of this condition the cost to be taken into account in determining the excess cost to be charged to the Contractor under this condition shall consist of the cost of the materials, hire charges of tools and plants and/or labour provided by the BHEL with an addition of such percentage to cover superintendence and establishment charges as may be decided by the concerned executive/authorized person whose decision shall be final and conclusive.

10.30 CANCELLATION OF CONTRACT IN PART OF FULL FOR CONTRACTOR'S DEFAULT:

If the Contractor:

a) makes default in carrying out the work as directed and continues in that state after a reasonable notice from concerned executive/authorized person ;

b) fails to comply with any of the Terms and Conditions of the contract or after reasonable notice in writing with orders properly issued thereunder;

c) BHEL, may without prejudice to any other right or remedy which shall have accrued or shall accrue thereafter to BHEL CANCEL the contract as whole or in part thereof or only such work order or items of work in default from the contract. Whenever BHEL exercise the authority to cancel the contract as whole or part under this condition BHEL may complete the work at the contractor's risk and cost (as certified by concerned executive/authorized person which is final and conclusive) being less than the contract cost, the advantage shall accrue to the BHEL. If the cost exceeds the moneys due to the Contractor under this contract the Contractor shall either pay the excess amount ordered by concerned executive/authorized person or the same shall be recovered from the Contractor by other means. In case the BHEL carries out the work or any part thereof under the provisions of the conditions the cost to be taken into account in determining the excess cost to be charged to the Contractor under this condition shall consist of the cost of the materials, hire charges of tools and plant and/or labour provided by the BHEL with an addition of such percentage to cover the superintendence and establishment charges as may be decided by the concerned executive/authorized person whose decision shall be final and conclusive.

SIGNATURE OF THE TENDERER WITH SEAL AND ADDRESS

10.31 POST TECHNICAL AUDIT OF WORK AND BILLS: BHEL reserves the right to carry out the post-payment Audit and technical examination of the work and final bill including all supporting vouchers, abstracts etc., and enforce recovery of any sum becoming due as a result thereof in the manner provided in the presiding sub-paragraphs. However, no such recovery shall be enforced after three years of passing the final bill.

10.32 All statutory requirements under Minimum Wages Act,1948, Factories Act 1948, Workmen Compensation Act 1923,Employees Provident Fund and Miscellaneous Provisions Act, 1952,Payment of Gratuity Act 1972, Employee State Insurance Act 1948, Contract Labour (R&A) Act 1970, Payment of Bonus Act 1965, Income Tax Act, Service Tax Act and all other applicable Acts shall be complied with by the Contractor.

10.33 Vendor shall confirm his compliance with all statutory requirements, rules, regulations, notifications in relation to employment of his employees issued from time to time by the concerned authorities.

10.34 Contractor shall comply with all statutory requirements, rules, regulations, notifications in relation to employment of his employees issued from time to time by the concerned authorities.

10.35 Contractor wherever applicable shall maintain proper records prescribed by the concerned statutory authorities and provides a copy of the same to BHEL.

11 COMMENCEMENT OF WORKS:

11.1 The Contractor shall commence the works within the time indicated in the Letter of Intent from BHEL and shall proceed with the same with due expedition without delay.

11.2 If the successful bidder fails to start the work within the stipulated time, BHEL, at his sole discretion will have the right to cancel the contract. His earnest money and/or Security Deposit with BHEL will stand forfeited without any further reference to him without prejudice to any and all of BHELs other rights and remedies in this regard.

11.3 All the works shall be carried out under the direction and to the satisfaction of BHEL.

11.4 The erected/constructed plant or work performed under this contract shall be taken over when it has been completed in all respects and/or satisfactorily put in to operation at site.

12 MODE OF PAYMENT AND MEASUREMENT OF THE WORK COMPLETED:

12.1 All payments due to the contract shall be paid through E-PAYMENT (EFT / RTGS) only. The contractor has to furnish acceptance for e-payment, duly indicating the bank account details in the prescribed format.

12.2 Payment will be based on document and drawing submission basis for each items as mentioned in Technical Specification for scope of work Sl. No 12.

12.3 For Progress running bill payment :

The contractor shall present detailed measurement working sheets, in triplicate, duly indicating all relevant details based on technical documents and connected drawings for work done during the month/period under various categories in line with terms of payment as per letter of intent. The basis of arriving at the quantities/weight shall be the relevant documents and drawings released by BHEL.

12.4 These measurement working sheets will be checked and vetted by BHEL Engineers and quantities and percentage eligible for payment under various groups shall be decided by BHEL engineers. The abstract of quantities and percentage so arrived based on the terms of payment shall be entered in Measurement Book and signed by both the parties.

12.5 Based on the above quantity, contractor shall prepare the bills in prescribed Performa and work out the financial value. These will be entered in Measurement Book and signed by both the parties and paid duly effecting recoveries due.

12.6 All recoveries due from the contractor for the month/period shall be affected in full from the corresponding running bills unless specific approval from the competent authorities is obtained otherwise.

12.7 Measurement shall be restricted to that for which it is required to ascertain the financial liability of BHEL under this contract.

12.8 The measurement shall be taken jointly be persons duly authorized on the part of BHEL and by the contractor.

SIGNATURE OF THE TENDERER WITH SEAL AND ADDRESS

12.9 The contractor shall bear the expenditure involved, if any, in making the measurement. The contractor shall, without extra charges provide all the assistance with appliances and other things necessary for measurement.

12.10 If, at any time due to any reason, whatsoever, it becomes necessary to re-measure the work done in full or in part, the expenses towards such re-measurements shall be borne by the contractor.

12.11 Passing of measurement as per bills does not amount to acceptance of the completion of the work mentioned. Any left-out work has to be completed if pointed out at a later date by BHEL.

12.12 Final measurement bill shall be prepared in the final bill preformed prescribed for the purpose based on the certificate issued by BHEL Engineer that entire work as stipulated in the tender specification has been completed in all respects to the entire satisfaction of BHEL. Contractors shall give unqualified „No Due and „No Demand certificate. All the tools and tackles loaned to them should be returned in condition satisfactory to BHEL. Quantities/Weight erected shall be prepared and paid, within a reasonable time after completion of work. After payment of final bill, only guarantee obligation percentage shall remain unpaid which shall be released in accordance with terms of payment. The final bill quantities and financial value shall also be entered in Measurement Book and signed by both the parties to the contract.

13 RIGHTS OF BHEL

BHEL reserves the following rights in respect of this contract without entitling the contractor for any compensation.

13.1 To get the work done through other agency at the risk and cost of the Contractor, in the event of Contractor's poor progress, or inability to progress the work, persistent disregard in instruction of BHEL, assignment transfer, subletting of the contract without permission of BHEL, non fulfillment of any contractual obligation etc., and to recover compensation for such losses from the contractor including BHELs supervision charges and overheads from Security Deposit / other dues.

13.2 To withdraw any portion of work and/or to restrict/alter quantum of work as indicated and get it done through other agency and/or with departmental labour to suit BHEL's commitment to its customer or in case BHEL decides to advance the date of completion due to other emergency reasons/BHELs obligation to its customer.

13.3 BHEL reserves the right to terminate the order at any point of time without assigning any reason, upon giving 30 days' notice to the agency. BHEL reserves the right to short close the order upon giving 30 days' notice, depending upon requirement. In such cases the payment shall be made for the completed work on pro-rata basis and no other compensation will be granted by BHEL

13.4 To terminate the contract after due notice to cause forfeiting of Security Deposit and recover the loss sustained in getting the balance work done through other agencies in addition to liquidated damages in the event of**:**

1) Contractor has continued poor progress.
2) Withdrawal from or abandonment of the work before completion of the work.

13.5 Corrupt act of contractor.

3) Insolvency of the contractor.
4) Persistent disregards to the instructions of BHEL.
5) Assignment transfer, sub-letting of the contract without BHEL"s permission.
6) Non-fulfillment of any contractual obligations.

13.6 To recover any money due from the contractor from any money due to the contractor under this contract or any other contract or from the Security Deposit.

13.7 LD/ Penalty:

To claim compensation for losses sustained including BHEL's supervision charges and overheads for completion on termination of contract and to impose penalty for delay in completion of the work at the rate of 1/2% of the contract value per week of delay or part thereof subject to a ceiling of 10% of contract value.

13.8 To terminate the contract or to restrict the quantum of work and pay for the portion of work executed in case BHEL's contracts with their customers are terminated for any reason.

SIGNATURE OF THE TENDERER WITH SEAL AND ADDRESS

13.9 To affect recovery from any amount due to the contractor under this or any other contractor in any other form the moneys BHEL is forced to pay to anybody, due to contractor's failure to fulfill any of his obligation.

13.10 To restrict or increase the quantity and nature of work to suit the site requirements since the tender specification is based on preliminary documents, quantities furnished there in are indicative and approximate, and the rates quoted shall not be subject to revision.

13.11 While every endeavor will be made by BHEL, they cannot guarantee un-interrupted work to the contractor due to conditions beyond their control. Contractor will not be entitled for any compensation extra payment on his account.

13.12 In the event of any dispute of any nature, the decision of BHEL shall be final and binding on the contractor.

14) RESPONSIBILITIES OF THE CONTRACTOR IN RESPECT OF LOCAL LAWS, EMPLOYMENT OF WORKERS Etc.

The following are the responsibilities of the Contractor in respect of observation of local laws, employment of personnel, payment of taxes etc.

14.1 The contractor shall pay all taxes, including sales Tax on works contract if any fees, license, charges, deposits duties, tool royalty commissions or other charges which may be leviable on account of any of his operations in execution of the contract in case BHEL is forced to pay any of such taxes. BHEL shall have the right to recover the same from the contractor either from his bills or other wise as deemed fit.

14.2 The contractor shall ensure that no damage is caused to any person/property of other parties working at site. If any such damage is caused it is the responsibility of the contractor to make good the losses or compensate for the same.

14.3 All the properties/equipments/components of BHEL their client loaned with or without deposit to the contractor in connection with contract shall remain the properties of BHEL/their client. The contractor shall use such properties for purpose of execution of this contract, all such properties/equipments/components shall be deemed to be in good condition when received by the Contractor's unless he notifies within 48 hours to the contrary.

The Contractor shall return them in good condition as and when required by BHEL/their client. In case of non-return, loss, damage, repairs etc, the cost thereof, as may be fixed by the site Engineer, will be recovered from the Contractor.

14.4 It is not obligatory on the part of BHEL to supply any tools and tackles or other materials other than those specifically agreed to do so by BHEL. However, depending upon the availability/ possibility BHEL's customer's handing equipment and other plants may be made available to the contractor on payment of the hire charges/free of charges, as fixed subject to the conditions laid down by BHEL/Customer from time to time. Unless paid in advance such hire charges if applicable shall be recovered from contractor's bills/security deposit in one installment.

14.5 The Contractor shall fully indemnify BHEL against all claims of whatsoever nature arising during the course of erection/construction/performing work under the contract.

14.6 In case the Contractor is required to undertake any work outside the scope of this contract the rate payable shall be those mutually agreed upon.

14.7 Any delay in completion of works/non-achievement of periodical targets, due to reasons attributable to the contractor, the same will have to be compensated by the Contractor either by increasing manpower and resources or by working extra hours and/or by working more than one shift. All these are to be carried out by the contractor at no extra cost.

14.8 The contractor shall arrange and co-ordinate his work in such a manner as to cause no hindrance to other agencies working in the same premises.

14.9 All safety rules and codes applied by the client/BHEL at site shall be observed by the contractor without exception. The contractor shall be responsible for the safety of the equipment/material and works to be performed by him and shall maintain all light, fencing guard's signs etc, or other protection necessary for the purpose. Contractor shall also take such additional precautions as may be indicated from time to time by the Engineer with a view prevent pilferage, accidents, fire hazards and due precautions shall be taken against fire hazards and atmospheric conditions. Suitable number of clerical staff, watch and ward, store keepers to take care of equipment, materials and construction tools and tackles shall be posted at site by the contractor till the completion of the work under this contract. The contractor shall arrange for such safety devices as are necessary for such type of work and carry out the requisite site tests of handling equipments, lifting tools, tackles, etc., as per prescribed standards and practices.

SIGNATURE OF THE TENDERER WITH SEAL AND ADDRESS

14.10 In case of any class of work for which there is no such specification as laid down in the Contract, such work shall be carried out in accordance with the instructions and requirements of the Engineer.

14.11 No levy of payment or charge made or imposed shall be impeached by reason of any clerical error or by reason of any mistake in the amount levied or demanded or charged.

14.12 The contractor shall take all reasonable care to protect the materials and work till such time the plant/equipment has been taken over by BHEL/their client.

14.13 Contractor shall not stop the work or abandon the site for whatsoever reason or dispute, excepting for force major conditions. All such problems/dispute shall be separately discussed and settled without affecting the progress of work. Such stoppage or abandonment shall be treated as breach of contract and dealt with accordingly.

15) CONSEQUENCES OF CANCELLATION:

15.1 Whenever BHEL exercises its authority to terminate the contract/withdraw a portion of work under the clause 13 they may complete the work by any means. In the event of the cost of completion as certified by the site Engineer which is final and conclusive being less than the contract cost, the advantage shall accrue to BHEL and that if the cost of completion exceeds the moneys due to the contractor under the contract, the contractor shall either pay the excess amount ordered by BHEL or the same shall be recovered from the contractor by any other means. This will be in addition to the forfeiture of Security Deposit and recovery of liquidated damages as per the relevant clauses.

15.2 In case BHEL completes the work under the provision of this condition, the cost of such Completion to be taken into account in determining the excess cost to be charged to the contract under this condition, shall consist of materials purchased and/or labour provided by BHEL with an addition of such percentage to cover supervision and establishment charges as may be decided by BHEL.

16) INSURANCE:

16.1 It is sole responsibility of the contractor to insure his workmen against accidents and injury while at work as required by relevant Rules and to pay compensation, if any, to workmen as per workmen's Compensation Act. The work will be carried out in a protected area and all the rules and regulations of the client/BHEL in the area of project which are in force from time to time will have to be followed by contractor.

16.2 If due to negligence and/or non-observance of safety and other precautions, any accident/injury occurs to any other persons/public, the contractor shall have to pay necessary compensation and other expenses if so decided by the appropriate authorities.

16.3 If due to contractor's carelessness, negligence of non-observance of safety precautions damage to BHELs /customer's property and personnel should occur and if BHEL is unable to recover in full cost from the insurance company, the same will be recovered from the contractor.

16.4 It shall be the responsibility of the contractor to provide security arrangement for the materials belonging to BHEL and handed over to the contractor for erection/transportation till the same are taken over by BHEL after erection/returned to BHEL stores.

16.5 "BHEL shall recover the amount of compensation paid to victim(s) by BHEL towards loss of life/permanent disability due to an accident which is attributable to the negligence of contractor, agency or firm or any of its employees as detailed below. a). Victim: Any person who suffers permanent disablement or dies in an accident as defined below. b). Accident: Any death or permanent disability resulting solely and directly from any unintended and unforeseen injurious occurrence caused during the manufacturing/operation and works incidental thereto at BHEL factories/offices and precincts thereof, project execution, erection and commissioning, services, repairs and maintenance, trouble shooting, serving, overhaul, renovation and retrofitting, trial operation, performance guarantee testing undertaken by the company or during any works/ during working at BHEL units/officers/townships and premises/ project sites. c). Compensation in respect of each of the victims: (i) In the event of death or permanent disability resulting from Loss of both limbs: Rs.10,00,000/- (Rs. Ten lakh) (ii) In the event of other permanent disability: Rs.7,00,000/- (Rs. Seven lakh) d). Permanent Disablement: A disablement that is classified as a permanent total disablement under the proviso to section 2 (I) of the Employee's Compensation Act, 1923.

Back to Index page

SIGNATURE OF THE TENDERER WITH SEAL AND ADDRESS

GENERAL INSTRUCTIONS TO BIDDERS

1. Sealed Tenders for the work mentioned in the Schedule are invited from Contractors experienced in works of similar kind and magnitude.

2. Tenders must be submitted **in sealed covers** and should be addressed to

   Sr. ENGINEER/ WCM DEPARTMENT,
   ENGG. BUILDING –GROUND FLOOR (WEST SIDE),
   BHARAT HEAVY ELECTRICALS LIMITED,
   RANIPET – 632 406.

   The Name, Address of the Bidder and the name of work shall be clearly mentioned on the cover.

3. Tenders will be received up to 14.00 hrs. on 17.06.2020 in the prescribed form and will be opened on 17.06.2020 at 14.30 hrs onwards at WCM Office Conference Hall in the presence of such of those Bidders or their agents who may choose to attend.

4. Bidder should sign and seal each and every page of the tender document including the drawings/annexure attached thereto before submitting the tender.

5. Tenders not submitted in the prescribed forms are liable for rejection.

6. In quoting the rates, the Bidders are advised to take into account all factors including any fluctuations in the market rates etc. No claim will be entertained on this account after acceptance of the tender or during the currency of the contract.

7. GENERAL CONDITIONS OF CONTRACT FOR WORKS, GENERAL INSTRUCTIONS TO BIDDERS, drawings, specifications and other documents also form part of the agreement to be entered into.

8. In the event of tender being submitted by a firm, the tender must be signed separately and legibly by each partner or member of the firm or in their absence, by the person holding the Power of Attorney on behalf of the firm concerned. In the latter case, a copy of the Power of Attorney duly attested by a Gazette Officer must accompany the tender.

9. The Bharat Heavy Electricals Limited, reserves the right to reject any or all the tenders received or accept any tender or part thereof without assigning any reason there for. In case of acceptance of a part of tender, time for completion may also be reduced to the extent considered appropriate by the accepting authority.

10. Unit rates should be quoted in figures as well as in words with reference to each item and for all the items shown in the attached schedule.

11. Rates quoted SHALL INCLUDE ALL royalties, terminal taxes, octrai, duties, central and provincial excise tax, sales tax / VAT and other taxes levied under the State or Central Government Rules excluding applicable GST for this work.

12. **GST:**

Registration & GST Rate

1. Bidder should indicate GSTIN No. (Copy of GST registration to be enclosed) and PAN No. (copy of PAN to be enclosed).
2. Central Tax/ State Tax/ Integrated Tax/ Union Territory tax to be quoted as extra in %.
3. Bidders to ensure correct applicability of Central Tax/ State Tax/ Integrated Tax/ Union Territory tax based on the Inter / Intra state movement Supply of goods and provision services or both.

Invoicing & Payment

4. The Tax Invoice for supply of Goods & Services should be raised as per the provision of GST Act & Rules and must compulsorily mention the following: -
   a. BHEL-RANIPET GSTIN: 33AAACB4146P2ZL or GSTIN of BHEL Nodal Agency as mentioned in NIT or informed subsequently.
   b. HSN Code or Service Accounting Code for supply of goods or services.
   c. Name & address of supplier
   d. GSTIN of Supplier

SIGNATURE OF THE TENDERER WITH SEAL AND ADDRESS

e. Consecutive Serial Number & date of issue
f. Description of goods or services
g. Total value of supply
h. Taxable value of supply
i. Tax Rate – Central Tax & State Tax or Integrated Tax, Cess
j. Amount of Tax charged
k. Place of supply
l. Address of delivery if different from place of supply
m. Signature of authorized signatory

5. Reimbursement of GST to the vendor is contingent upon complying with the following condition by the service provider: -
   i. Uploading the onward GST Return **(GSTR-1)** in GSTN Network portal within the statutory time period.
   ii. Discharging the GST tax liability to the Government.
   iii. Submission of Tax Invoice to BHEL.
   iv. Submission of proof of payment of GST to BHEL.
   v. Availment of Input Tax Credit by BHEL.

Input Tax Credit

6. In case GST credit is delayed/ denied to BHEL, due to non/delayed receipt of goods and/or services and/or tax invoice or expiry of timeline prescribed in GST Law for availing such ITC, or any other reason not attributable to BHEL, GST amount shall be recoverable from Vendor along with interest & penalty levied/ leviable.
7. In case vendor delays declaring such invoice in his return and GST credit availed by BHEL is denied or reversed subsequently as per GST law, GST amount paid by BHEL towards such ITC reversal as per GST law shall be recoverable from vendor/contractor along with interest & penalty levied/ leviable on BHEL.
8. In case of discrepancy in the data uploaded by supplier in the GSTN portal or in case of any incomplete work/service, then BHEL will not be able to avail the tax credit and will notify the supplier of the same. Supplier has to rectify the data discrepancy in the GSTN portal or issue credit note (details to be uploaded in GSTN portal).
9. For any such delay in availing of tax credit for reasons attributable to vendor (as mentioned above), interest as per the GST Act & Rules, along with penalty, if any will be deducted for the delayed period i.e. from the month of receipt till the month tax credit is availed, from the running bills.

Penalty for Non-compliance of GST Act

10. Penalty amount so determined along with GST if applicable thereon shall be recovered from the contractor.

Anti-profiteering Measure

11. Any reduction in rate of Tax on any supply of goods or services or the benefit of input tax credit shall be passed on to the recipient by way of commensurate reduction in prices.

Other Provision

12. The agency should quote the applicable taxes and duties in the technical bid (part-A) as well as in price bid (Part-B).
13. All the terms & conditions of the contract with respect to Taxes & Duties are subject to the new taxation laws introduced from time to time (e.g., GST). The terms & conditions will be modified in accordance with the provisions of new laws (e.g., GST).
14. The Prices quoted above must be inclusive of all taxes and duties and exclusive of GST, which will be payable extra as per applicable rules and subject to Submission of documentary evidence.
15. **In case any changes in taxes and duties as per Gov. Notification (including GST), the same shall be applicable from time to time.**
16. If the Contractor is not registered for any statutory obligation and not liable there to, then a declaration shall be submitted along with offer that they are within the threshold limit.

SIGNATURE OF THE TENDERER WITH SEAL AND ADDRESS

The following details to be furnished by the bidder:

S.No.	Details	To be filled by the bidder
1	GSTIN No. (Copy to be enclosed)	
2	PAN No (Copy to be enclosed)	
3	HSN Code & SAC Code (Copy to be enclosed)	

If any change in GST (statuary variation) will be to the account of BHEL. But if the variation is effective during the delayed/extended period of execution for reasons attributable to the vendor, the same shall be borne by the vendor only. The required compliance under relevant statue shall be carried out.

17. The quoted rates shall also include expenditures towards complying statutory payments like Provident fund, ESI payments, bonus etc for the staff deployed in the work.
18. The contractor will have to submit the GST Registration certificate to BHEL and claim the GST from BHEL by submitting Tax invoice as per Rules & Regulations of GST and the documentary evidence will have to be submitted along with the next bill. If for any reason, the contractor has to pay penalty, interest on GST, the contractor has to bear such additional payment. BHEL will pay only the GST at actual. **The Bharat Heavy Electricals Limited will not entertain any claim in this regard.**

13. PAYMENT TERMS:

Monthly post payment shall be paid through NEFT / RTGS payment within a reasonable time to the contractor after duly submitting Tax invoice in triplicate and necessary documents by the contractor and certification from concerned Engineer In-charge.

Payment will be based on document and drawing submission basis for each items as mentioned Sl. No 12. (Please refer Pg.no.5)

14. Taxes and Duties:

GST @ 18% is applicable. GST amount will be reimbursed to the contractor on submission of proof of remittance challan and uploading the details GSTN network within the statutory time period. In case any change in GST as per Government Notification, the same may be adopted during the contract period.

15. If the bidder finds discrepancies or omissions in the tender documents or should be in doubt as to their meaning, he should at once address the authority inviting the tender for clarification. Every endeavor is made to avoid any error which can materially affect the basis of the tender but the successful Bidder shall take up on himself to provide for the risk of any error which may be subsequently discovered and shall make no subsequent claim on account thereof.

16. Quantities shown in the attached schedules are only approximate and may vary up to +/- 10 %.

17. Should a Bidder or a contractor has a relative or in the case of a firm or company of contractors any of its shareholders or share holder's relative, employed in Bharat Heavy Electricals Limited, the authority inviting tenders shall be informed of this fact at the time of submission of the tender failing which tender may be disqualified or if such fact subsequently come to light, the contract may be rescinded.

18. If the Bidder expires after submission of his tender, the Bharat Heavy Electricals Limited may be at the discretion of cancel such tender.

19. If a partner of a firm expires after submission of the tender or after the acceptance of the tender, Bharat Heavy Electricals Limited may cancel such tender at the discretion unless the firm retains his character.

20. The Bharat Heavy Electricals Limited will not bound by any Power of Attorney granted by the Bidder or changes in the composition of the firm made subsequent to the execution of the contract. They may, however, recognize such power of attorney and changes after obtaining proper legal advice, the cost of which will be chargeable to the contract concerned.

21. The contractor deliberately, gives wrong information in his tender or creates conditions favorable for the acceptance of his tender, Bharat Heavy Electricals Limited reserves the right to reject the tender at any stage.

22. Words imparting the singular number shall also deem to include the plural number and vice versa where the context so requires.

SIGNATURE OF THE TENDERER WITH SEAL AND ADDRESS

23. The General and Special Conditions of Contract are complimentary to each other and where they are in conflict, the Special Conditions shall prevail. In regard to matters not covered by the General or Special Conditions of Contract, those contained in the specifications approved by Bharat Heavy Electricals Limited shall apply.

24. Canvassing in any form in connection with the tender is strictly prohibited and the tenders submitted by the contractors who resort to canvassing will be liable for rejection.

25. All contractors will have to produce Income Tax clearance certificate from the Income Tax authorities concerned along with their tenders. Those contractors whose income is not taxable will be required to give an affidavit of their income on the prescribed form.

26. COMPLIANCE TO REGULATIONS AND BY-LAWS:

The Contractor shall conform to the provisions of any statute relating to the work and regulations and By-laws of any local authority. The Contractor shall be bound to give all notices required by statute regulations or By-Laws as aforesaid and to pay all fees and taxes payable to any authority in respect thereof.

27. For every month, the contractor shall prepare & submit bill in the succeeding month within one week from the date of certification of quantity by user dept.

28. Any billing related query, clarification, document requirement, etc. shall be resolved in one go by the Contractor within one week from the date of intimation.

29. The offers of the bidders who are under suspension as also the offers of the bidders, who engage the services of the banned firms, shall be rejected. The list of banned firms is available on BHEL web site www.bhel.com.

The following input from BHEL are attached for reference as Annexures.

a) Wind Data for the site. (Annexure-WL)

b) Site seismic data. (Annexure-EQ)

c) Preliminary loading of Absorber. Final details will be provided during contract.

d) Sample drawing for Gypsum bleed Pump/Process water Pumps.

e) Sample drawing for tanks foundation.

f) Sample Drawing for Existing pile layout and pilecap of Absorber foundation.

g) Sample Drawing for proposed tentative layout of New and Existing Pile and Pilecap.

Back to Index page

SIGNATURE OF THE TENDERER WITH SEAL AND ADDRESS

SPECIAL CONDITIONS OF THE CONTRACT

1. BHEL reserves the right to increase or decrease the tendered quantity.
2. Lowest prices received against BHEL tenders need not be the technically acceptable one, and in that case, BHEL reserves the right not to consider the same.
3. BHEL reserves the right to negotiate or refloat the tender opened, if L1 Price is not lowest acceptable price to them inter-alia other reasons.
4. BHEL reserves the right to negotiate the L1 rate.
5. **The contract will be finalized based on the overall LOWEST value and to be awarded to single party only. Clarification if any can be obtained from the undersigned before submitting the offer. Kindly acknowledge the receipt of the entire set of tender document.**
6. This work shall be in force for 210 Days from the date of commencement of work. The period of the contract may be renewed or extended at the discretion of Bharat Heavy Electricals Limited.
7. Tenderer has to sign and seal all the pages of tender document along with all supporting documents.
8. **GENERAL TERMS AND CONDITIONS OF REVERSE AUCTION:**

BHEL will finalize the rates through paper price bid opening/Reverse auction. Hence Tenderers are requested to give their best prices at the first instance itself.

BHEL reserves the right to go for Reverse Auction(RA) (Guidelines as available on www.bhel.com) instead of opening the sealed envelope price bid, submitted by the bidder. This will be decided after techno commercial evaluation. Bidders to give their acceptance with the offer for participation in RA. Non acceptance to participate in RA may result in non-consideration of their bids incase BHEL decides to go for RA.

Those bidders who have given their acceptance to participate in Reverse Auction will have to necessarily submit 'Process compliance form' (to the designated service provider) as well as 'Online sealed bid' in the Reverse Auction. Non-submission of 'Process compliance form' or 'Online sealed bid' by the agreed bidder(s) will be considered as tampering of the tender process and will invite action by BHEL as per extant guidelines for suspension of business dealings with suppliers/ contractors (as available on www.bhel.com).

The bidders have to necessarily submit online sealed bid less than or equal to their envelope sealed price bid already submitted to BHEL along with the offer. The envelope sealed price bid of successful L1 bidder in RA, if conducted, shall also be opened after RA and the order will be placed on lower of the two bids (RA closing price & envelope sealed price) thus obtained. The bidder having submitted this offer specifically agrees to this condition and undertakes to execute the contract on thus awarded rates.

In case of tie for H1 bid (identical online sealed bid), 15 minutes additional time shall be provided and all the participating bidders shall be informed by mail/ message on bidding screen to enable bidders to submit revised online sealed bids so as to break the tie.

If it is found that L1 bidder has quoted higher in online sealed bid in comparison to envelope sealed bid for any item(s), the bidder will be issued a warning letter to this effect. However, if the same bidder again defaults on this count in any subsequent tender in the unit, it will be considered as fraud and will invite action by BHEL as per extant guidelines for suspension of business dealings with suppliers/ contractors (as available on www.bhel.com)."

As a reminder to the bidders, system will flash following message (in RED Color) during the course of 'online sealed bid':
"Bidders to submit online sealed bid less than or equal to their envelope sealed bid already submitted to BHEL.

SIGNATURE OF THE TENDERER WITH SEAL AND ADDRESS

TERMS & CONDITIONS OF REVERSE AUCTION

Against Periodical cleaning of various types of machines and accessories at BHEL, Ranipet shop floors may resort to "REVERSE AUCTION PROCEDURE" i.e., ON LINE BIDDING (THROUGH A SERVICE PROVIDER). The philosophy followed for reverse auction shall be English Reverse (No ties).

1) For the proposed reverse auction, technically and commercially acceptable bidders only shall be eligible to participate.
2) Those bidders who have given their acceptance for Reverse Auction (quoted against this tender enquiry) will have to necessarily submit „online sealed bid" in the Reverse Auction. Non-submission of "online sealed bid" by the bidder for any of the eligible items for which techno-commercially qualified, will be considered as tampering of the tender process and will invite action by BHEL as per extant guidelines in vogue.
3) BHEL will engage the services of a service provider who will provide all necessary training and assistance before commencement of on line bidding on internet.
4) In case of reverse auction, BHEL will inform the bidders the details of Service Provider to enable them to contact & get trained.
5) Business rules like event date, time, bid decrement, extension etc. also will be communicated through service provider for compliance.
6) Bidders have to fax the Compliance form (annexure IV) before start of Reverse auction. Without this, the bidder will not be eligible to participate in the event.
7) In line with the NIT terms, BHEL will provide the calculation sheet (e.g., EXCEL sheet) which will help to arrive at "Total Cost to BHEL" like Packing & forwarding charges, Taxes and Duties, Freight charges, Insurance, GST for Services and loading factors (for non-compliance to BHEL standard Commercial terms & conditions) for each of the bidder to enable them to fill-in the price and keep it ready for keying in during the Auction.
8) Reverse auction will be conducted on scheduled date & time.
9) At the end of Reverse Auction event, the lowest bidder value will be known on auction portal.
10) The lowest bidder has to fax/e-mail the duly signed and filled-in prescribed format for price breakup including that of line items, if required, (Annexure VII) as provided on case-to-case basis to Service provider within two working days of Auction without fail.
11) In case BHEL decides not to go for Reverse Auction procedure for this tender enquiry, the Price bids and price impacts, if any, already submitted and available with BHEL shall be opened as per BHEL"s standard practice.
12) Bidders shall be required to read the "Terms and Conditions" section of the auctions site of Service provider, using the Login IDs and passwords given to them by the service provider before reverse auction event. Bidders should acquaint themselves of the „Business Rules of Reverse Auction", which will be communicated before the Reverse Auction.
13) If the Bidder or any of his representatives are found to be involved in Price manipulation/ cartel formation of any kind, directly or indirectly by communicating with other bidders, action *as per extant BHEL guidelines*, shall be initiated by BHEL and the results of the RA scrapped/ aborted.
14) The Bidder shall not divulge either his Bids or any other exclusive details of BHEL to any other party.
15) In case BHEL decides to go for reverse auction, the H1 bidder (whose quote is highest in online sealed bid) may not be allowed to participate in further RA process. In case of tie for H1 bid (identical online sealed bids), 15 minutes' additional time shall be provided and all the participating bidders shall be informed by mail/ message on bidding screen to enable bidders submit revised online sealed bids so as to break the tie.
16) BHEL reserves the right to negotiate with the L1 tenderer emerged out of Reverse Auction if the L1 amount is more than the estimated amount.
17) For more details, please visit our BHEL website http://www.bhel.com (Revision of 'Guidelines for Reverse Auction', issued on 26.09.2016.)

Back to Index page

SIGNATURE OF THE TENDERER WITH SEAL AND ADDRESS

ACCEPTANCE FOR ELECTRONIC FUND TRANSFER / RTGS TRANSFER

01	NAME & ADDRESS OF THE SUPPLIER / VENDOR PHONE NO. WITH STD CODE	PAN NO.
02	VENDOR CODE (as in WORK ORDER)	
03	Details of Bank Account:	
A)	NAME & ADDRESS OF THE BANK (WITH PIN CODE)	
B)	BANK TELEPHONE NUMBER (WITH STD CODE)	
C)	BANK BRANCH CODE:	
D)	MICR CODE	
E)	ACCOUNT NUMBER	
F)	TYPE OF ACCOUNT	CURRENT / OD / CASH CREDIT
G)	VENDOR NAME AS PER BANK RECORDS	
H)	BANK BRANCH RTGS IFSC CODE	
I)	BANK BRANCH NEFT IFSC CODE	
J)	VENDOR'S EMAIL ID (give two ids)	
K)	NAME OF AUTHORISED SIGNATORY	

CERTIFICATE

I / We hereby agree to receive the payments due from BHARAT HEAVY ELECTRICALS LIMITED, RANIPET by the National Electronic Funds Transfer and/or RTGS Transfer mode by credit to my / our above mentioned Bank Account. I / We also agree that payments made to the above mentioned Account is a valid discharge of the liability of Bharat Heavy Electricals Limited, Ranipet. I / we also agree to bear the applicable Bank Charges for the above mode of transfer.

AUTHORISED SIGNATORY OF VENDOR WITH SEAL

Banker's Certification

We confirm that we are enabled for receiving RTGS and NEFT credits and we further confirm that the account number of _____ (name of account holder), the signature of the authorized signatory and the MICR and IFSC codes of our Branch mentioned above are correct.

PLACE:

DATE:

_____
(Manager / Officer's Signature Under Bank stamp)
Authorisation No._____

Note: This EFT Form is to be submitted duly filled in manually in all fields and duly signed by Authorised Signatory and certified by Banker.

Back to Index page

SIGNATURE OF THE TENDERER WITH SEAL AND ADDRESS

BLANK PAGE

Back to Index page

SIGNATURE OF THE TENDERER
WITH SEAL AND ADDRESS

PRICE BID (ANNEXURE)

(To be kept in a separate envelop cover)

SL. NO	BOQ DESCRIPTION	QUANTITY	UNIT	%Weightage of each item w.r.t. total amount
01	Design of DCFS* Absorber foundation for Unit#1 & #3 considering the existing piling and pile cap details. (The design shall be as per the specification mentioned elsewhere. Since the design for both units is same, Payment is done for one Unit only). [*DCFS : Double Contact Flow Scrubber of rectangular shape] (Loading for the new Absorber will be provided by BHEL)	01	EACH	10.13 %
02	Piling and Pile cap Drawings for DCFS Absorber foundation for Unit#1 & #3. (The drawings shall be as per the specification mentioned elsewhere. Since the drawings for both units is identical, Payment is done for one Unit only)	01	EACH	5.06 %
03	Preparing bar bending drawings and schedule for Pile caps mentioned in Sl No 02. (3D drawing software like Rebar CAD 3D or equivalent shall be used for preparing the bar bending schedule Since the drawings for both units is identical, Payment is done for one Unit only) (Loading for the new Absorber will be provided by BHEL)	01	SET	2.53 %
04	Design of DCFS Absorber foundation for Unit#2 considering the existing piling and pile cap details. (The design shall be as per the specification mentioned elsewhere).	01	EACH	7.60 %
05	Piling and Pile cap Drawings for DCFS Absorber foundation for Unit#2. (The drawings shall be as per the specification mentioned elsewhere)	01	EACH	5.06 %
06	Preparing bar bending drawings and schedule for Pile caps mentioned in Sl No 05. (3D drawing software's like Rebar CAD 3D or equivalent shall be used for preparing the bar bending schedule)	01	SET	2.53 %
07	Obtaining review and vetting by any of the reputed Govt Institutions (IITs, IISc, NITs, SERC) for Sl No 01, 02, 04, 05.	01	LOT	20.25 %
08	Design of Primary Hydro cyclone Feed (PHF) Tank foundation (pile foundations). Size of Tank is Appx. 7.0m Dia x 8.2m Ht (Loading for the tank will be provided by BHEL)	01	EACH	5.06 %
09	Piling and Pile cap drawing for PHF Tank foundations.	01	EACH	5.06 %
10	Design and detailing of All Miscellaneous Pumps (like Gypsum Bleed Pumps, PHF Pumps etc. - approximately 10 Pumps).	01	SET	25.32 %
11	Layout and Detailed drawing of Drain Trench near absorber.	01	EACH	2.53 %
12	Modification in existing paving area and design and detailing for new pavement area	01	EACH	5.06 %
13	Preparation and detailing of combined Civil Foundation Layout for all 3 units. (This shall include the details of the existing foundations also.)	01	EACH	2.53 %
14	Preparing and submitting drawings for Concrete structures (pedestal, pump foundations, trenches and similar items) and its reinforcement for the design provided by BHEL. The payment will be based on the volume of RCC in 'Cubic meter' available in the prepared drawings.	25	CUM	1.28 %
	Total Weightage			**100%**
	Total Lumpsum Amount in Rs. Excluding GST to be quoted by the bidder -------->			

Quoted GST % : _____ %

Note:

1. Individual item rates for the above schedules will be arrived based on the lumpsum amount quoted by the bidder & % percentage weightage indicated against each schedule. This amount shall be rounded off to the nearest Rupee.
2. Applicable/Quoted GST amount will be extra & same will be taken into account while evaluating total cost to BHEL , for arriving at L1 bidder .
3. Any other entry elsewhere (individual item rate, if any) in the Price bid by the bidder shall be treated as Null and Void .
4. The above rates are quoted after having fully read and understood the enquiry terms and condition.

Back to Index page

SIGNATURE OF THE TENDERER WITH SEAL AND ADDRESS

WIND DATA

ANNEXURE-WL

BONGAIGAON PROJECT

CRITERIA FOR WIND RESISTANT DESIGN OF STRUCTURES AND EQUIPMENT

All structures shall be designed for wind forces in accordance with IS:875 (Part-3) and as specified in this document. See Annexure - B for site specific information.

Along wind forces shall generally be computed by the Peak (i.e. 3 second gust) Wind Speed method as defined in the standard.

Along wind forces on slender and wind sensitive structures and structural elements shall also be computed, for dynamic effects, using the Gust Factor or Gust Effectiveness Factor Method as defined in the standard. The structures shall be designed for the higher of the forces obtained from Gust Factor method and the Peak Wind Speed method.

Analysis for dynamic effects of wind must be undertaken for any structure which has a height to minimum lateral dimension ratio greater than "5" and/or if the fundamental frequency of the structure is less than 1 Hz.

Susceptibility of structures to across-wind forces, galloping, flutter, ovalling etc. should be examined and designed/detailed accordingly following the recommendations of IS:875 (Part-3) and other relevant Indian standards.

It should be estimated if size and relative position of other structures are likely to enhance the wind loading on the structure under consideration. Enhancement factor, if necessary, shall suitably be estimated and applied to the wind loading to account for the interference effects.

Damping in Structures

The damping factor (as a percentage of critical damping) to be adopted shall not be more than as indicated below for:

a)	Welded steel structures	:	1.0%
b)	Bolted steel structures	:	2.0%
c)	Reinforced concrete structures	:	1.6%
d)	Steel stacks	:	As per IS:6533 & CICIND Model Code whichever is more critical.

ANNEXURE-B

SITE SPECIFIC DESIGN PARAMETERS

The various design parameters, as defined in IS: 875 (Part-3), to be adopted for the project site shall be as follows:

a) The basic wind speed "Vb" at ten metres above the mean ground level : 55 metres/second

b) The risk coefficient "K1" : 1.08

c) Category of terrain : Category-2

Note: Notwithstanding the values of the above mentioned parameters, the design wind pressure so computed at any point shall not be taken less than 1500 N/Sq. metre for all classes of structures, i.e. A, B & C, as defined in IS: 875 (Part-3).

ANNEXURE-EQ

CRITERIA FOR EARTHQUAKE RESISTANT DESIGN OF STRUCTURES AND EQUIPMENT

All structures and equipment shall be designed for seismic forces adopting the site specific seismic information provided in this document and using the other provisions in accordance with IS:1893 (Part 1):2002 and IS:1893 (Part 4):2005. Pending finalisation of Parts 2, 3 and 5 of IS:1893, provisions of part 1 shall be read along with the relevant clauses of IS:1893:1984, for structures other than the buildings and industrial structures including stack-like structures.

A site specific seismic study has been conducted for the project site. The peak ground horizontal acceleration for the project site, the site specific acceleration spectral coefficients (in units of gravity acceleration 'g') in the horizontal direction for the various damping values and the multiplying factor (to be used over the spectral coefficients) for evaluating the design acceleration spectra are as given at Annexure-I.

Vertical acceleration spectral values shall be taken as 2/3rd of the corresponding horizontal values.

The site specific design acceleration spectra shall be used in place of the response acceleration spectra, given at figure-2 in IS:1893 (Part 1) and Annex B of IS:1893 (Part 4). The site specific acceleration spectra along with multiplying factors specified in Annexure-I includes the effect of the seismic environment of the site, the importance factor related to the structures and the response reduction factor. Hence, the design spectra do not require any further consideration of the zone factor (Z), the importance factor (I) and response reduction factor (R) as used in the IS:1893 (Part 1 and Part 4).

Damping in Structures

The damping factor (as a percentage of critical damping) to be adopted shall not be more than as indicated below for:

a)	Steel structures	:	2%
b)	Reinforced Concrete structures	:	5%
c)	Reinforced Concrete Stacks	:	3%
d)	ND Cooling Towers	:	2%
e)	Steel stacks	:	2%

Method of Analysis

Since most structures in a power plant are irregular in shape and have irregular distribution of mass and stiffness, dynamic analysis for obtaining the design seismic forces shall be carried out using the response spectrum method. The number of vibration modes used in the analysis should be such that the sum total of modal masses of all modes considered is at least 90 percent of the total seismic mass and shall also meet requirements of IS:1893 (Part 1). Modal combination of the peak response quantities shall be performed as per Complete Quadratic Combination (CQC) method or by an acceptable alternative as per IS:1893 (Part 1).

In general, seismic analysis shall be performed for the three orthogonal (two principal horizontal and one vertical) components of earthquake motion. The seismic response from the three components shall be combined as specified in IS:1893 (Part 1).

For buildings, if the design base shear (V_B) obtained from modal combination is less than the base shear ($\overline{V}_B$) computed using the approximate fundamental period (T_a) given in IS:1893:Part 1 and using site specific acceleration spectra with appropriate multiplying factor, the response quantities (e.g. member forces, displacements, storey forces, storey shears and base reactions) shall be enhanced in the ratio of $\overline{V}_B$/ V_B. However, no reduction is permitted if $\overline{V}_B$ is less than V_B.

For regular buildings less than 12m in height, design seismic base shear and its distribution to different floor levels along the height of the building may be carried out as specified under clause 7.5, 7.6 & 7.7 of IS:1893 (Part 1) and using site specific design acceleration spectra. The design horizontal acceleration spectrum value (Ah) shall be computed for the fundamental natural period as per clause 7.6 of IS:1893 (Part 1) using site specific spectral acceleration coefficients with appropriate multiplying factor given in Annexure-I. Further, the spectral acceleration coefficient shall get restricted to the peak spectral value if the fundamental natural period of the building falls to the left of the peak in the spectral acceleration curve.

Design/Detailing for Ductility for Structures

The site specific design acceleration spectra is a reduced spectra and has an in-built allowance for ductility. Structures shall be engineered and detailed in accordance with relevant Indian/International standards to achieve ductility.

ANNEXURE – I

SITE SPECIFIC SEISMIC PARAMETERS FOR DESIGN OF STRUCTURES AND EQUIPMENT

The various site specific seismic parameters for the project site shall be as follows:

1) Peak ground horizontal acceleration (MCE) : 0.38g

2) Multiplying factor to be applied to the site specific horizontal acceleration spectral coefficients (in units of gravity acceleration 'g') to obtain the design acceleration spectra

   a) for ordinary moment resisting steel frames designed and detailed as per IS:800 : 0.111

   b) for braced steel frames designed and detailed as per IS:800 : 0.083

   c) For special moment resisting RC frames designed and detailed as per IS:456 and IS:13920 : 0.067

   d) For steel chimney : 0.167

   e) for design of structures not covered under 2 (a) to 2 (d) above and under 3 below : 0.111

3) Multiplying factor to be applied to the site specific horizontal acceleration spectral coefficients (in units of gravity acceleration 'g') for design of equipment and structures where inelastic action is not relevant or not permitted : 0.22

Note: g = Acceleration due to gravity

The horizontal seismic acceleration spectral coefficients are furnished in subsequent pages.

ANNEXURE – I

HORIZONTAL SEISMIC ACCELERATION SPECTRAL COEFFICIENTS

(In units of 'g')

Time Period	Damping Factor (as a percentage of critical damping)	
(Sec)	2%	5%
0.000	1.000	1.000
0.030	1.000	1.000
0.031	1.029	1.019
0.050	1.568	1.349
0.060	1.840	1.501
0.070	2.108	1.643
0.080	2.371	1.777
0.086	2.526	1.854
0.088	2.578	1.879
0.090	2.629	1.904
0.095	2.758	1.965
0.098	2.834	2.001
0.100	2.885	2.025
0.103	2.961	2.060
0.108	3.087	2.118
0.110	3.137	2.141

ANNEXURE – I

HORIZONTAL SEISMIC ACCELERATION SPECTRAL COEFFICIENTS

(In units of 'g')

Time Period	Damping Factor (as a percentage of critical damping)	
(Sec)	2%	5%
0.112	3.187	2.164
0.115	3.262	2.198
0.118	3.337	2.231
0.121	3.412	2.264
0.122	3.437	2.275
0.125	3.511	2.308
0.127	3.560	2.329
0.129	3.610	2.351
0.132	3.683	2.383
0.133	3.708	2.393
0.134	3.732	2.404
0.140	3.880	2.466
0.141	3.880	2.477
0.150	3.880	2.570
0.200	3.880	2.570
0.250	3.880	2.570

ANNEXURE – I

HORIZONTAL SEISMIC ACCELERATION SPECTRAL COEFFICIENTS

(In units of 'g')

Time Period	Damping Factor (as a percentage of critical damping)	
(Sec)	2%	5%
0.300	3.880	2.570
0.350	3.880	2.570
0.400	3.880	2.570
0.431	3.880	2.570
0.442	3.880	2.570
0.450	3.880	2.570
0.474	3.880	2.570
0.488	3.880	2.570
0.500	3.880	2.570
0.517	3.880	2.570
0.525	3.880	2.570
0.542	3.880	2.570
0.550	3.880	2.570
0.562	3.880	2.570
0.576	3.880	2.570
0.588	3.880	2.570

ANNEXURE – I

HORIZONTAL SEISMIC ACCELERATION SPECTRAL COEFFICIENTS

(In units of 'g')

Time Period	Damping Factor (as a percentage of critical damping)	
(Sec)	2%	5%
0.597	3.880	2.570
0.603	3.880	2.570
0.609	3.880	2.570
0.615	3.880	2.570
0.625	3.880	2.570
0.645	3.880	2.570
0.658	3.880	2.570
0.667	3.880	2.570
0.670	3.880	2.570
0.690	3.880	2.570
0.700	3.880	2.570
0.750	3.621	2.570
0.755	3.597	2.552
0.800	3.395	2.409
0.850	3.195	2.267
0.900	3.018	2.141

ANNEXURE – I

HORIZONTAL SEISMIC ACCELERATION SPECTRAL COEFFICIENTS

(In units of 'g')

Time Period	Damping Factor (as a percentage of critical damping)	
(Sec)	2%	5%
0.950	2.859	2.028
1.000	2.716	1.927
1.050	2.587	1.835
1.100	2.469	1.752
1.150	2.362	1.676
1.200	2.263	1.606
1.250	2.173	1.542
1.300	2.089	1.482
1.350	2.012	1.427
1.400	1.940	1.376
1.450	1.873	1.329
1.500	1.811	1.285
1.550	1.752	1.243
1.600	1.698	1.204
1.650	1.646	1.168
1.700	1.598	1.134

ANNEXURE – I

HORIZONTAL SEISMIC ACCELERATION SPECTRAL COEFFICIENTS

(In units of 'g')

Time Period	Damping Factor (as a percentage of critical damping)	
(Sec)	2%	5%
1.750	1.552	1.101
1.800	1.509	1.071
1.850	1.468	1.042
1.900	1.429	1.014
1.950	1.393	0.988
2.000	1.358	0.964
2.050	1.325	0.940
2.100	1.293	0.918
2.150	1.263	0.896
2.200	1.235	0.876
2.250	1.207	0.856
2.300	1.181	0.838
2.350	1.156	0.820
2.400	1.132	0.803
2.450	1.109	0.787
2.500	1.086	0.771

ANNEXURE – I

HORIZONTAL SEISMIC ACCELERATION SPECTRAL COEFFICIENTS

(In units of 'g')

Time Period	Damping Factor (as a percentage of critical damping)	
(Sec)	2%	5%
2.550	1.065	0.756
2.600	1.045	0.741
2.650	1.025	0.727
2.700	1.006	0.714
2.750	0.988	0.701
2.800	0.970	0.688
2.850	0.953	0.676
2.900	0.937	0.664
2.950	0.921	0.653
3.000	0.905	0.642
3.050	0.890	0.632
3.100	0.876	0.622
3.150	0.862	0.612
3.200	0.849	0.602
3.250	0.836	0.593
3.300	0.823	0.584

ANNEXURE – I

HORIZONTAL SEISMIC ACCELERATION SPECTRAL COEFFICIENTS

(In units of 'g')

Time Period	Damping Factor (as a percentage of critical damping)	
(Sec)	2%	5%
3.350	0.811	0.575
3.400	0.799	0.567
3.450	0.787	0.559
3.500	0.776	0.551
3.550	0.765	0.543
3.600	0.754	0.535
3.650	0.744	0.528
3.700	0.734	0.521
3.750	0.724	0.514
3.800	0.715	0.507
3.850	0.705	0.501
3.900	0.696	0.494
3.950	0.688	0.488
4.000	0.679	0.482

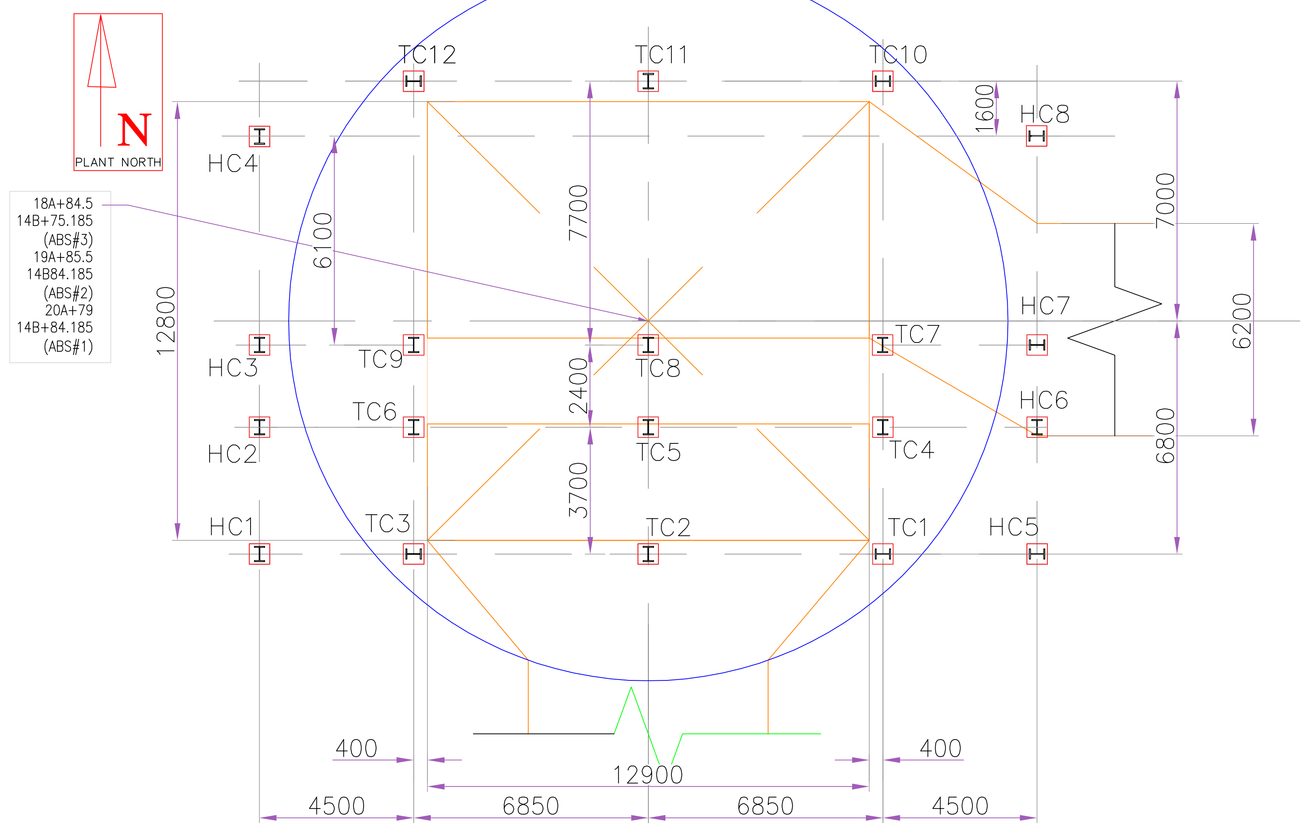

ABSORBER AREA COLUMNS LOADING TABLE (TYPICAL) - ALL LOADS IN 'T' AND MOMENTS IN 'T-M'																																				
LOAD CASE->	DL			EQPT+PIPE			LL			WLX+			WLX-			WLY+			WLY-			SLX+			SLX-			SLY+			SLY-		
COL ID	Hx	Hy	V	Hx	Hy	V	Hx	Hy	V	Hx	Hy	V	Hx	Hy	V	Hx	Hy	V	Hx	Hy	V	Hx	Hy	V	Hx	Hy	V	Hx	Hy	V	Hx	Hy	V
HC1	1	-1	6	-1	1	7	1	-1	1	-1	-1	-6	1	1	6	1	-4	-12	-1	4	12	2	5	34	-2	-5	-34	1	10	29	-1	-10	-29
HC2	1	-1	7	-1	1	7	1	-1	2	-1	-1	-4	1	1	5	1	-5	4	-1	5	-4	3	5	23	-3	-5	-23	1	11	11	-1	-11	-11
HC3	1	1	8	-1	1	9	1	-1	2	-1	-1	-5	1	1	5	1	-5	-1	1	5	1	3	5	25	-3	-5	-25	1	11	3	-1	-11	-3
HC4	1	-1	10	-1	-1	14	1	1	3	-1	-1	-3	1	1	3	-1	-4	9	1	4	-9	3	5	15	-3	-5	-15	1	9	27	-1	-9	-27
HC5	-1	1	6	1	1	8	-1	-1	1	-1	2	10	2	-2	-9	1	-8	-32	-1	9	33	3	10	57	-3	-10	-57	1	32	126	-1	-32	-126
HC6	-1	-1	10	1	1	7	-1	-1	2	-1	2	3	1	-2	-2	-1	-9	21	-1	9	-20	2	10	25	-2	-10	-25	1	32	84	-1	-32	-84
HC7	-1	1	25	1	1	10	-1	-1	5	-2	2	11	2	-2	-11	-1	-10	-33	-1	10	38	5	11	66	-5	-11	-66	1	37	137	-1	-37	-137
HC8	-1	-1	32	-1	-1	15	-1	-1	7	-1	2	5	2	-2	-5	-1	-13	44	1	13	-48	3	14	52	-3	-14	-52	1	49	176	-1	-49	-176
TC1	-1	-1	48	-1	-1	7	1	-1	21	-1	-1	27	23	1	-25	4	-13	-62	-1	1	49	4	7	148	-4	-7	-148	2	30	215	-2	-30	-215
TC2	1	-1	57	-1	1	4	1	-1	24	-21	1	-3	21	1	-2	5	-2	-21	-4	-1	17	104	2	37	-104	-2	-37	25	-1	65	-25	1	-65
TC3	1	-1	48	1	-1	8	-1	-1	21	-24	-1	-28	1	1	29	1	-22	-70	-5	1	58	117	1	180	-117	-1	-180	31	-5	228	-31	5	-228
TC4	1	1	43	1	1	13	1	1	16	-1	-1	5	2	1	-6	-1	-5	1	-1	11	7	4	1	33	-4	-1	-33	1	-1	34	-1	1	-34
TC5	1	1	36	-1	1	13	1	1	16	-1	-1	1	1	1	1	1	-1	-5	-1	1	12	1	1	7	-1	-1	-7	1	2	29	-1	-2	-29
TC6	1	1	41	-1	1	15	-1	1	18	-3	-1	-8	1	1	7	1	-9	-3	1	20	9	7	16	42	-7	-16	-42	2	54	23	-2	-54	-23
TC7	1	1	71	-1	-1	21	1	1	28	-1	1	8	2	-1	-9	-1	-11	10	-1	5	-3	5	1	36	-5	-1	-36	1	-4	29	-1	4	-29
TC8	1	1	55	-1	1	18	1	1	24	-1	-1	-1	1	1	-1	-1	-1	8	-1	1	1	1	1	6	-1	-1	-6	1	2	24	-1	-2	-24
TC9	-1	1	66	1	-1	24	-1	1	34	-3	-2	-11	1	1	11	1	-20	17	1	9	-8	7	28	62	-7	-28	-62	2	75	51	-2	-75	-51
TC10	1	1	87	-1	1	17	1	1	37	-1	1	41	25	1	-40	-1	-1	49	4	13	-59	3	7	261	-3	-7	-261	1	34	147	-1	-34	-147
TC11	1	1	83	1	-1	12	1	1	41	-22	-1	-2	22	-1	-1	-4	1	23	5	2	-26	114	3	24	-114	-3	-24	15	-1	78	-15	1	-78
TC12	-1	1	79	1	1	17	-1	1	42	-25	-1	-41	1	2	43	-5	-1	53	1	23	-60	132	20	188	-132	-20	-188	16	64	266	-16	-64	-266
ABSORBER TANK BASE	8.2 T/SQM SLURRY PRESSURE OVER ABSORBER AREA (20.8 x 31.9)																					499 MT		= HX	-499 MT		= HX	HY=	249 MT		HY=	-249 MT	

ABSORBER AREA COLUMN LAYOUT

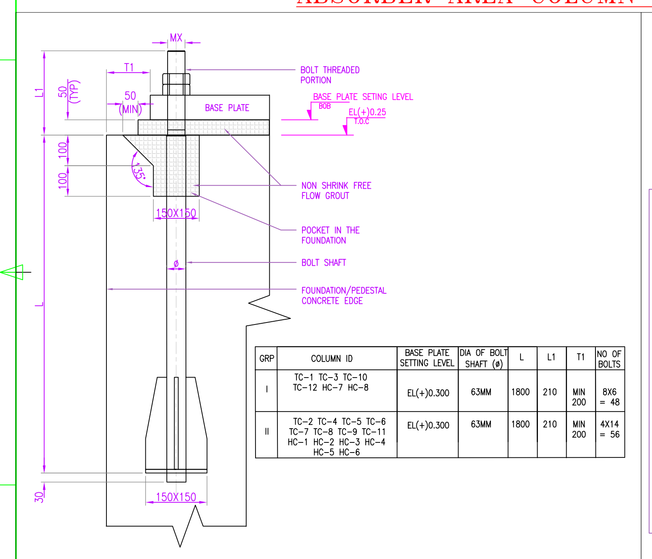

GRP	COLUMN ID	BASE PLATE SETTING LEVEL	DIA OF BOLT SHAFT (ø)	L	L1	T1	NO OF BOLTS
I	TC-1 TC-3 TC-10 TC-12 HC-7 HC-8	EL(+)0.300	63MM	1800	210	MIN 200	8X6 = 48
II	TC-2 TC-4 TC-5 TC-6 TC-7 TC-8 TC-9 TC-11 HC-1 HC-2 HC-3 HC-4 HC-5 HC-6	EL(+)0.300	63MM	1800	210	MIN 200	4X14 = 56

TYPICAL DETAILS OF ANCHOR BOLT

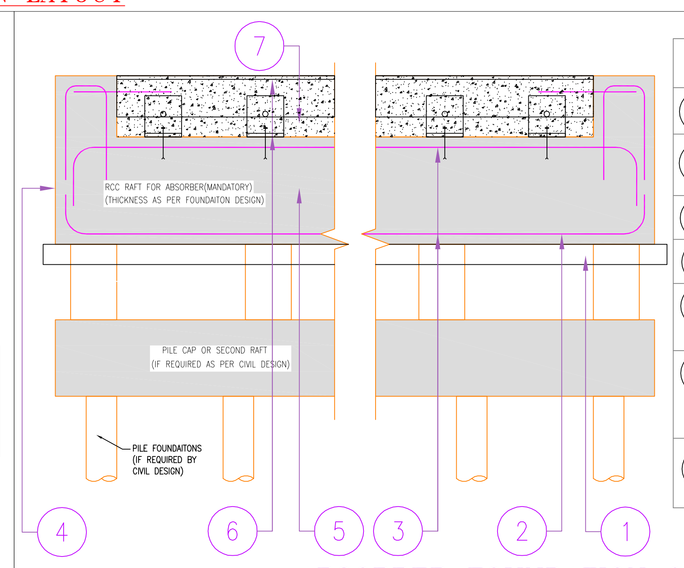

ABSORBER FOUNDATION PROCEDURE		REMARKS
1	LEAN CONCRETE CASTING	
2	INSTALLATION OF BOTTOM BARS	PAY ATTENTION TO THE POSITION OF BOLT LENGTH
3	INSTALLATION OF ALL RE-BARS	PAY ATTENTION TO THE POSITION OF BOLTS
4	FORM WORK	
5	COLUMN BOLT FIXING & SLAB CONCRETE CASTING (FIRST STAGE CONCRETE)	STOP AT T.O.SC-150, PART
6	INSTALLATION OF EMBEDDED STEEL	ISA 90X90X8-80MM LONG THOUGH DRILL ANCHOR; THEN WELDING ISA90X90X8(CONTINUOUS)
7	FORM WORK & SECONDARY CONCRETE CASTING (SECOND STAGE SONCRETE)	PART

ABSORBER FOUNDATION PROCEDURE

MONOLITHIC COMBINED FOUNDATION/RAFT IS REQUIRED AT T.O.SC FOR ABSORBER TANK BASE AND ABSORBER SUPPORTING STRUCTURE COLUMNS (TC-01 TO TC-12). EXTENT OF FOUNDAITON SHALL BE AS PER DETAIL-D1

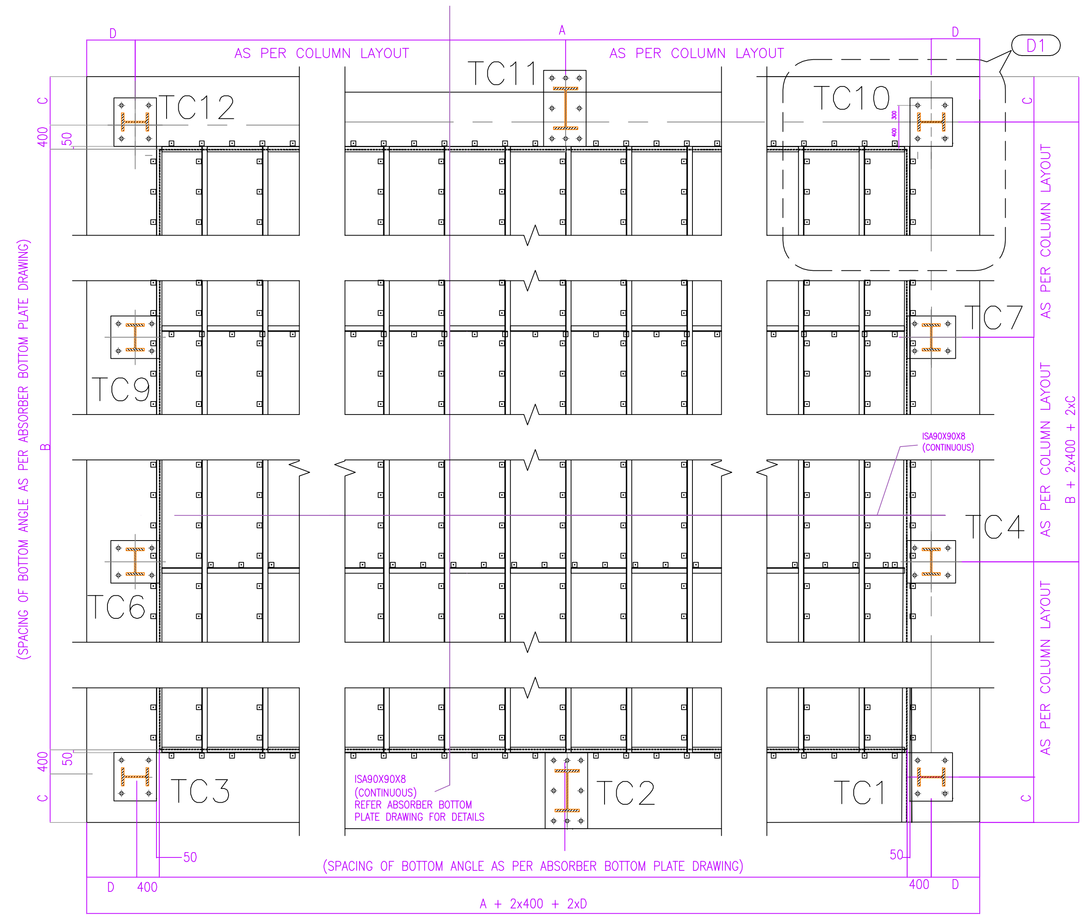

ABSORBER COLUMN LAYOUT

SCALE 1:50

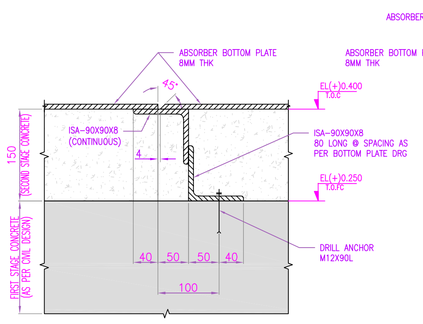

SECTION BB
TYP DETAIL OF BOTTOM PLATE FIXING
(SCALE 1:5)

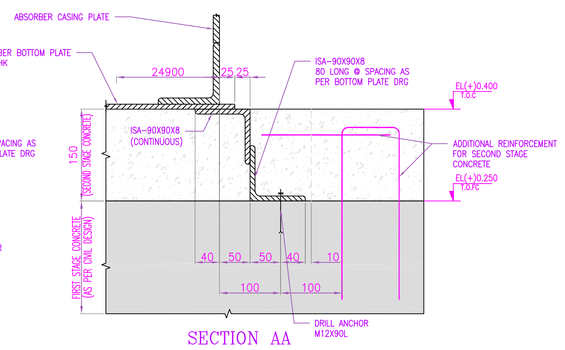

SECTION AA
TYP DETAIL OF BOTTOM PLATE FIXING AT CASING LOCATION
(SCALE 1:5)

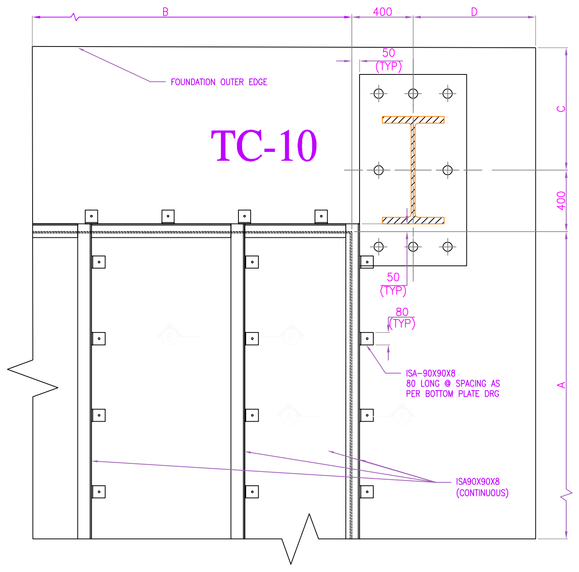

DETAIL-D1
(SCALE 1:20)

DIMENSIONS IN MILLIMETRES			
A	B	C	D
(ABSORBER LENGTH)	(ABSORBER WIDTH)	(COL ℄ TO FDN EDGE)	(COL ℄ TO FDN EDGE)
12900	12800	500 (MIN) TO BE FINALIZED BY FOUNDATION DESIGNER	500 (MIN) TO BE FINALIZED BY FOUNDATION DESIGNER

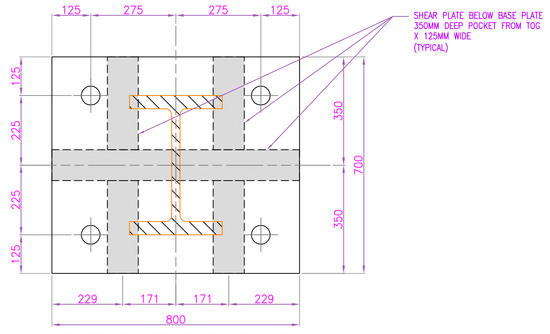

BASE PLATE FOR GRP-II
63ø BOLT-4NOS;
ø68 HOLE IN BASE PLATE
(SCALE 1:10)

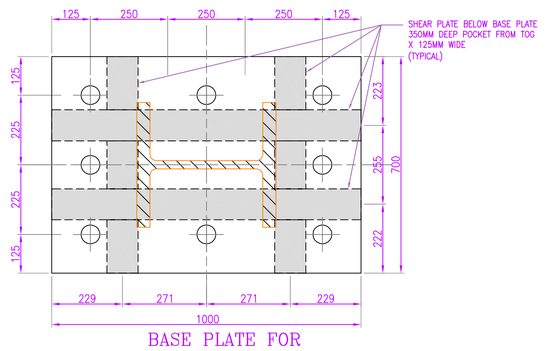

BASE PLATE FOR GRP-I
63ø BOLT-8NOS;
ø68 HOLE IN BASE PLATE
(SCALE 1:10)

REFERANCE DRWINGS:-

1. FLUE GAS DUCT LAYOUT FOR FGD (OLD CONTRACT) : 4610-101-03RP-PVM-F-024
2. ELEVATION OF UNTREATED FLUE GAS DUCT (OLD CONTRACT) : 4610-101-03RP-PVM-F-025
3. ELEVATION OF TREATED FLUE GAS DUCT (OLD CONTRACT) : 4610-101-03RP-PVM-F-026
4. CIVIL LOAD DATA AND FDN BOLT DETAILS OF ABSORBER (OLD CONTRACT) : 4610-101-03RP-PVC-B-020
5. FGD SYSTEM ABSORBER TOWER – LAYOUT OF PILES (OLD CONTRACT) : 4610-101-03RP-PVC-B-22(SH1)
6. FGD SYSTEM ABSORBER TOWER – RC DETAILS AND SECTIONS/ PILECAP FOUNDATION (OLD CONTRACT) : 4610-101-03RP-PVC-B-22(SH2)
7. PLANT LAYOUT OF FGD SYSTEM : 0-FW-000-01389
8. ELEVATION OF DUCT LAYOUT FROM GGH OUTLET TO : 0-FW-000-01390
9. ABSORBER INLET AND FROM ABSORBER OUTLET TO GGH INLET.

PRELIMINARY ONLY

NOTES:

1. ALL DIMENSIONS ARE IN MILLIMETRES AND ELEVATIONS IN METRES
2. EL(±)0.00 CORRESPONDS TO RL(+)50.92M; FGL (FINISHED GRADED LEVEL) OF ENTIRE PLANT IS EL(–)0.500 i.e. RL(+)50.42M
3. THE THICKNESS OF SLAB BELOW ABSORBER(I.E. FIRST STAGE CONCRETE) SHALL BE DECIDED BY CIVIL/FOUNDATION DESIGNER.
4. TOP OF EMBEDDED STEEL SHALL BE CLEANED AFTER CONCRETE PLACING
5. INSTALLATION TOLERANCE OF EMBEDDED STEEL SHALL BE AS FOLLOWS
   5.1. VERTICAL DIRECTION ±3mm
   5.2. HORIZONTAL DIRECTION ±5mm
6. TOLERANCE OF CONCRETE PLACING AT FOUNDATION TOP SHALL BE AS FOLLOWS
   +1 TO -5
7. PEDESTAL TYPE REINFORCEMENT MAY BE PROVIDED BELOW ABSORBER COLUMN LOCATION AS PER CIVIL/FOUNDATION DESIGN.
8. THE BASIC WIND SPEED FOR THE REGION IS 55 M/S.
9. SEISMIC FORCES ARE BASED ON RESPONSE SPECTRUM ANALYSIS USING SITE ACCELERATION SPECTRA.
10. MINIMUM GRADE OF CONCRETE USED FOR FOUNDATION SHALL BE M25 OR AS PER TENDER SPECIFICATIONS.
11. GAP BELOW BASE PLATE SHALL BE GROUTED AND FILLED WITH SUITABLE GROUT AFTER ALIGNMENT OF ALL COLUMNS.
12. GRADE OF CONCRETE MIX USED FOR GROUTING SHALL BE ONE GRADE HIGHER THAN THE CONCRETE USED FOR FOUNDATION. NON-SHRINK FREE FLOW CEMENT OR ADMIXTURE SHALL BE USED FOR GROUTING.
13. CLEAR OR REMOVE THE RUST AND DUST OF THE FOUNDATION MATERIALS BEFORE EMBEDMENT, IF ANY.
14. TEMP PLATES SHALL BE USED FOR MAINTAINING EXACT LOCATION & VERTICAL ALIGNMENT OF FOUNDATION BOLTS.
15. ENSURE PROPER CONTACT BETWEEN GROUT MIX & BOTTOM OF BASE PLATE.
16. THE FOUNDATION BOLT AND DRILL ANCHORS ARE SUPPLIED BY BAP RANIPET AND TO BE ERECTED BY REGION AT SITE

LEGEND:-

H	: HORIZONTAL SHEAR
V	: VERTICAL LOAD
V(+)	: VERTICAL LOAD DOWNWARDS
V(–)	: VERTICAL LOAD UPWARDS
MX	: MOMENT ABOUT X-AXIS
MY	: MOMENT ABOUT Y-AXIS
T.O.FC	: TOP OF FIRST STAGE CONCRETE
T.O.SC	: TOP OF SECOND STAGE CONCRETE
FFL	: FINISHED FLOOR LEVEL
FGL	: FINISHED GROUND LEVEL
BOB	: BOTTOM OF BASE PLATE LEVEL

REV.	DATE	AUTD.	CKD.	APPD.	REV.	DATE	AUTD.	CKD.	APPD.
–	–	–	–	–	–	–	–	–	–

CUST NO. G305, G306 & G306

NTPC DRG NO: XXXXX

NTPC-BONGAIGAON, 3X250MW
(DCFS ABSORBER OVER EXISTING FDN)
FGD SYSTEM PACKAGE

BHARAT HEAVY ELECTRICALS LIMITED,
UNIT: BOILER AUXILIARIES PLANT,
RANIPET: 632 406.

DEPT CODE		NAME	SIGN	DATE
M	DRN	DEVANARAYANAN	~sd~	20.12.19
	CHD	PRIJI. ANTONY	~sd~	20.12.19
	APPD	K.R.PADMI	~sd~	20.12.19

TITLE: FOUNDATION LOADING FOR ABSORBER STRUCTURE (INCLUDING SPRAY HEADER PIPE SUPPORT COLUMNS)

Contents: the contents in this drawing are property of BHARAT HEAVY ELECTRICALS LIMITED. It can not be reproduced or used in other manner without our permission in writing. We will be responsible for damages or disclosure except those permitted for BHEL ACCOUNT WITH ALL DUE CREDITS.

DRAWING NO.	SCALE : NTS	SHEET	REVISION
0-FW-000-XXXX		1 OF 1	00

Size A0

DRAWING NO. 0-FW-000-XX

sample drawing for pump foundaitons

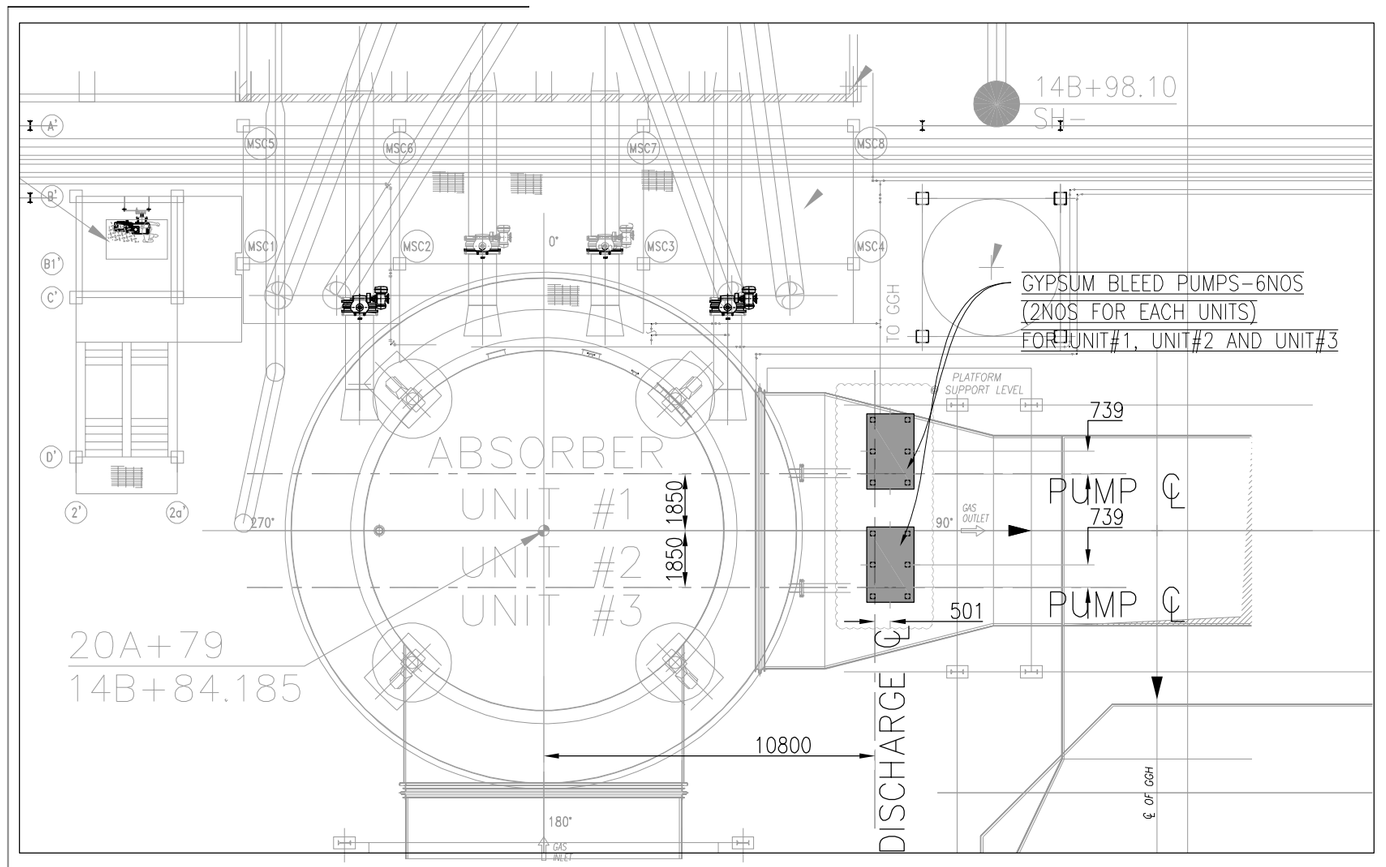

GYPSUM BLEED PUMPS

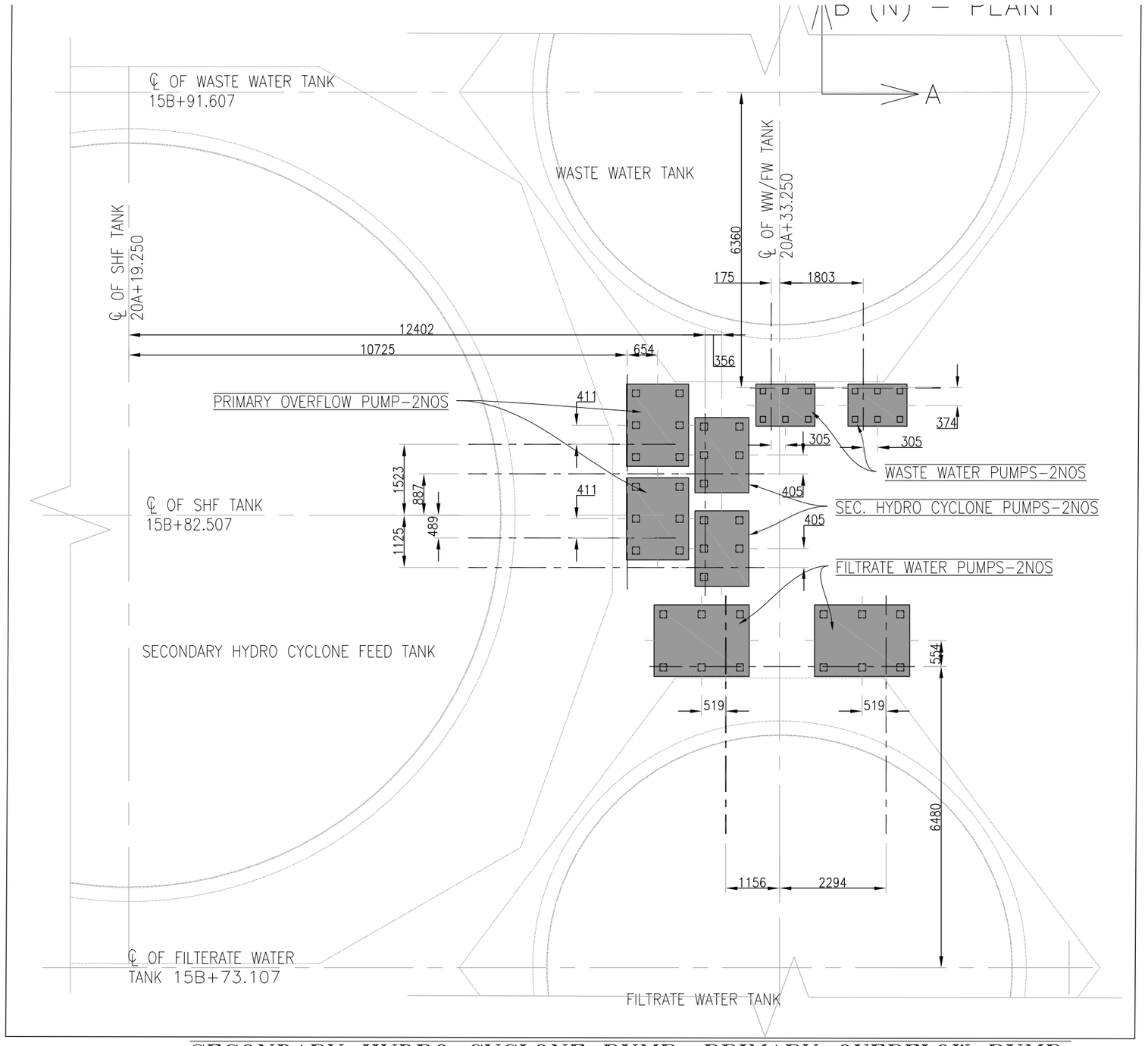

SECONDARY HYDRO CYCLONE PUMP, PRIMARY OVERFLOW PUMP,
FILTRATE WATER PUMPS, WASTE WATER PUMPS

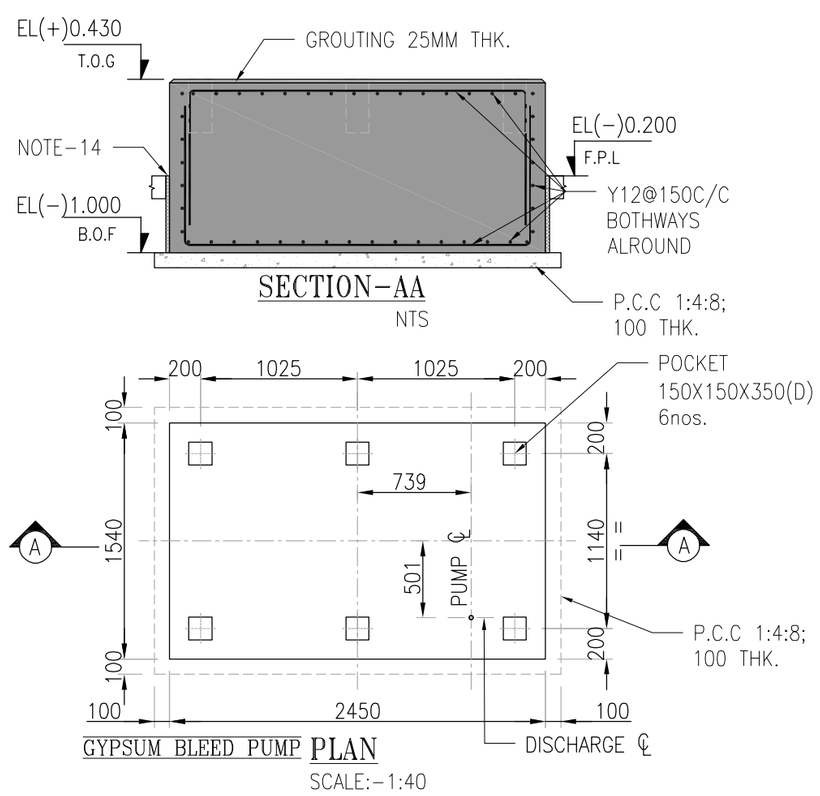

GYPSUM BLEED PUMP PLAN
SCALE:-1:40

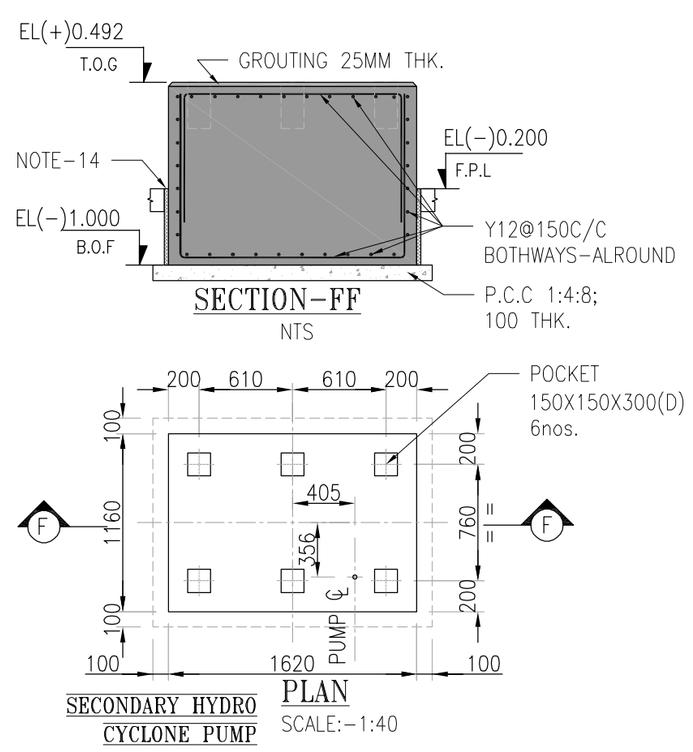

SECONDARY HYDRO CYCLONE PUMP PLAN
SCALE:-1:40

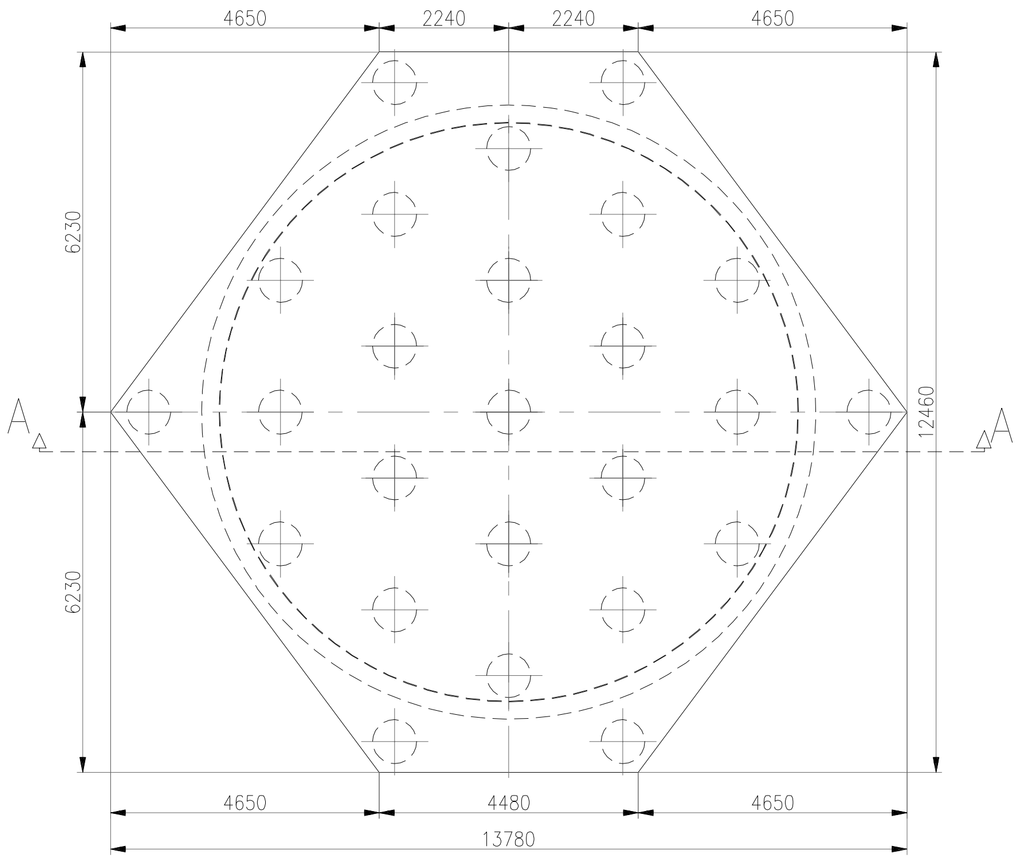

PLAN

(PILECAP FOR FILTRATE WATER TANK)

(SCALE 1:75)

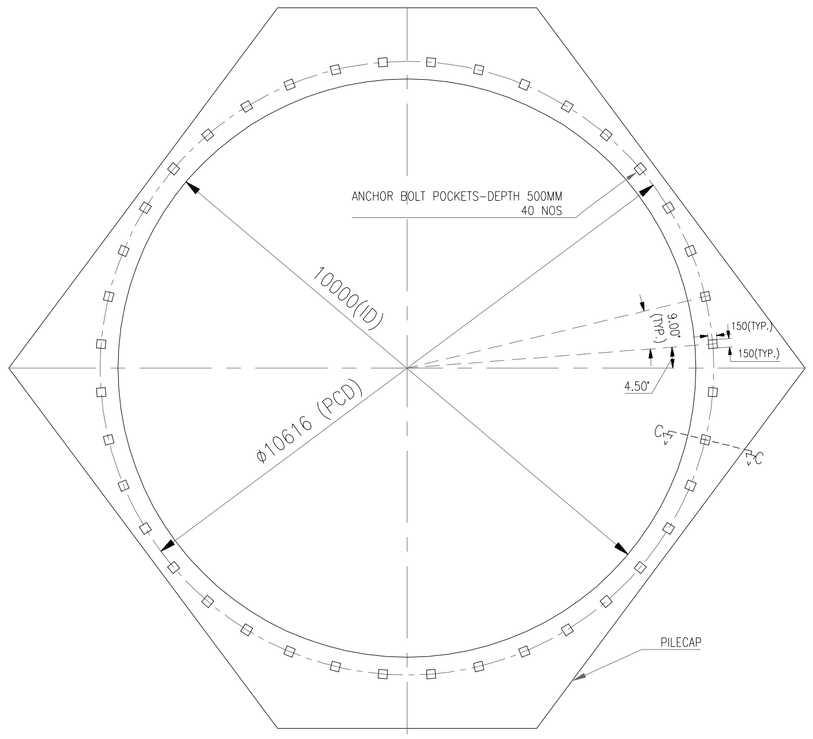

VIEW BB

(SCALE 1:75)

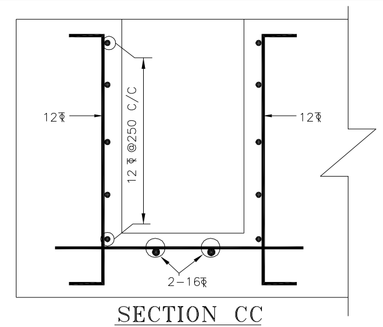

SECTION CC

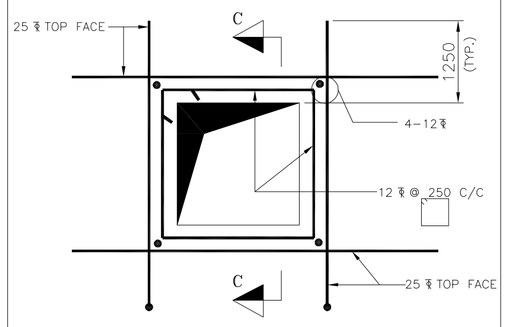

TYP. DETAIL OF EXTRA R/F AROUND POCKETS(150 SQ)

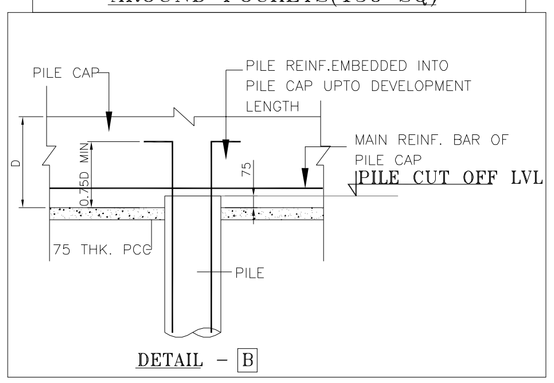

DETAIL - B

PILE CAP SCHEDULE

TYPE OF PILE CAP	NO OF PILE CAPS	OVERALL SIZE OF PILE CAP (MM) ALONG		DEPTH (D) (MM)	PILE CAP BOTTOM(M) (E.L.)	REINFORCEMENT				SHEAR REINF. SINGLE LEGGED		SIDE FACE REINF	REMARKS
						ALONG N-S DIRECTION		ALONG E-W DIRECTION					
		N-S	E-W			TOP (a)	BOTTOM (b)	TOP (c)	BOTTOM (d)	N-S	E-W		
FW TANK	1	AS SHOWN IN DRAWING		2000	(-)1.75	32ϕ @200 C/C	32ϕ @200 C/C	32ϕ @200C/C	32 ϕ @200 C/C	25ϕ @600 C/C	25ϕ @600 C/C	16 ϕ SIDE FACE @ 250 C/C	BOLTS EMBEDDED IN THE PILECAP NO PEDESTAL/RING BEAM PROVIDED. FOR BOLT & POCKET DETAILS REFER DWG NO. 4610-101-03RP-PVC-B-012-R02

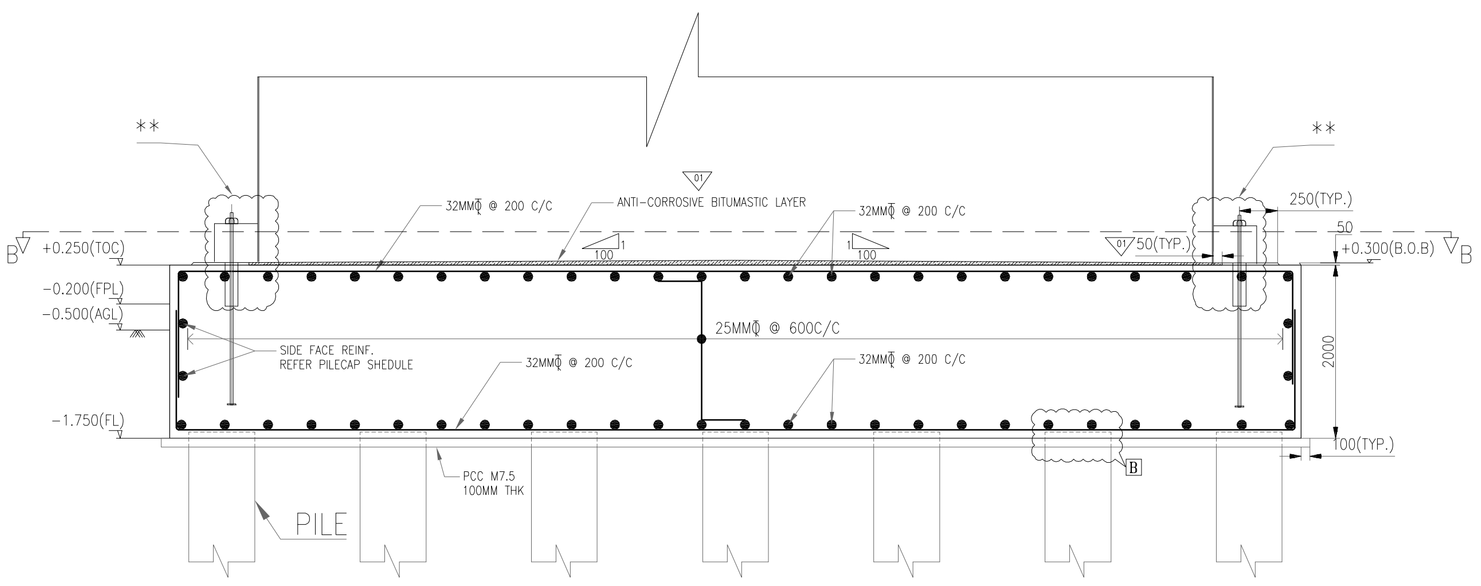

** - FOR BOLTS DETAILS REFER NOTE-12

SECTION AA

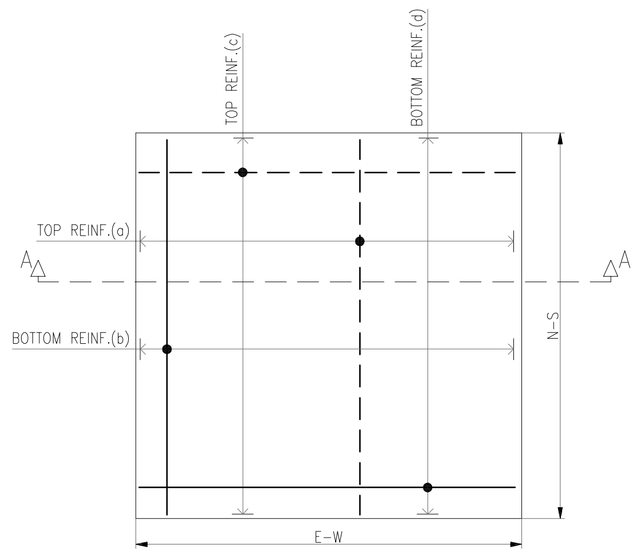

TYPICAL PLAN OF PILE CAP

LEGENDS:

B.O.B	- BOTTOM OF BASE PLATE
T.O.C	- TOP OF CONCRETE
F.P.L	- FINISHED PAVING/FLOORING LEVEL
F.L	- FOUNDING LEVEL OF PILECAP
A.G.L	- AVERAGE GROUND LEVEL
ID	- INTERNAL DIAMETER OF TANK
PCD	- PITCH CIRCLE DIAMETER FOR BOLTS

QUANTITIES:

M25 CEMENT CONCERETE = 228 CUM

Fe500 REINF. STEEL = 17.0 MT

REFERENCE DRAWINGS:

ENGG. REFERENCE DWGS:

1. 4610-101-03RP-PVM-F-018/R07 - KEY PLAN OF WET LIME STONE FGD SYSTEM
2. 4610-101-03RP-PVC-B-012/R02 - FOUNDATION LOADING OF FILTERATE WATER TANK

CONSTRUCTION REFERENCE DWG:

1. 4610-101-03RP-PVC-B-030/R00 - FILTRATE WATER TANK FOUNDATION-LAYOUT OF PLES
2. 4610-315-PVC-C-101/R01 - DETAILS OF TEST PILES & JOB PILES.
3. 4610-315-POC-C-0052 - GENERAL NOTES ON CONCRETE WORKS

SPECIAL NOTES: -

ALL PILING & FOUNDATION WORKS RELATED TO FGD SHALL BE EXECUTED UNDER MAINPLANT, CW & OFFSITE CIVIL WORKS PACKAGE AS PER SCOPE OF WORK, PART-A OF TECHNICAL SPECIFICATION.

NOTES: -

1. ALL DIMENSIONS ARE IN MM AND LEVELS ARE IN METRES UNLESS NOTED OTHERWISE.
2. EL(±)0.00M CORRESPONDS TO RL (+) 50.92M.
3. THE PILECAP FOUNDING LEVEL SHALL BE EL(-)1.75M.
4. GRADE OF CONCRETE SHALL BE M-25 CONFORMING TO IS:456
5. THE GRADE OF REINFORCEMENT STEEL SHALL BE Fe 500 /TMT CONFIRMING TO IS:1786.
6. LAP AND ANCHORAGE SHALL BE 50 TIMES THE DIA OF BAR.
7. FOR GENERAL NOTES ON CONTRETE WORKS REFER DRG. NO.4610-315-POC-C-0052
8. PILING WORK SHALL BE EXECUTED AS PER ITEM NO. 80 & 81 OF SCHEDULE OF ITEMS.
9. CONTRACTOR HAS TO FURNISH THE QUANTITIES FOR THE VARIOUS ITEMS OF WORK COVERED IN THIS DRG. ALONGWITH BACK UP CALCULATIONS (REFER CL:14.01.02(q) OF PART-A OF TECH SPECS).
10. MINIMUM CLEAR COVER TO THE MAIN REINF. OF PILECAP SHALL BE AS FOLLOWS TOP - 50MM; BOTTOM - 100MM; SIDES - 50MM
11. ALL PILES SHALL PROJECT 75MM INSIDE THE PILECAP
12. ALL BOLTS SHALL BE EMBEDDED INTO THE PILECAP AND THE SAME SHALL BE CHECKED & APPROVED BY BHEL BEFORE CONCRETING
13. **THIS DRAWING SHALL STRICTLY BE READ IN CONJUNCTION WITH DWG NO: 4610-101-03RP-PVC-B-012-R02 & 4610-101-03RP-PVC-B-030-R00**
14. EXCAVATION
    (i) ALL EXCAVATION WORK & BACK FILLING SHALL BE DONE AS PER ITEM NO. 1 OF BOQ
    (ii) EXCAVATION MATERIALS REQUIRED FOR BACK FILLING SHALL BE CARRIED UPTO A LEA OF 1KM AND STACKED AS PER INSTRUCTIONS OF ENGINEER
    (iii) SURPLUS EXCAVATED EARTH SHALL BE DISPOSED OFF WITHIN THE PLANT BOUNDARY AS DIRECTED BY THE ENGINEER
15. PILECAP SHALL BE CAST AFTER SUCCESSFUL COMPLETION OF INTEGRITY TESTS & ROUTINE PILELOAD TESTS ON PILES, AS PER SPECIFICATION

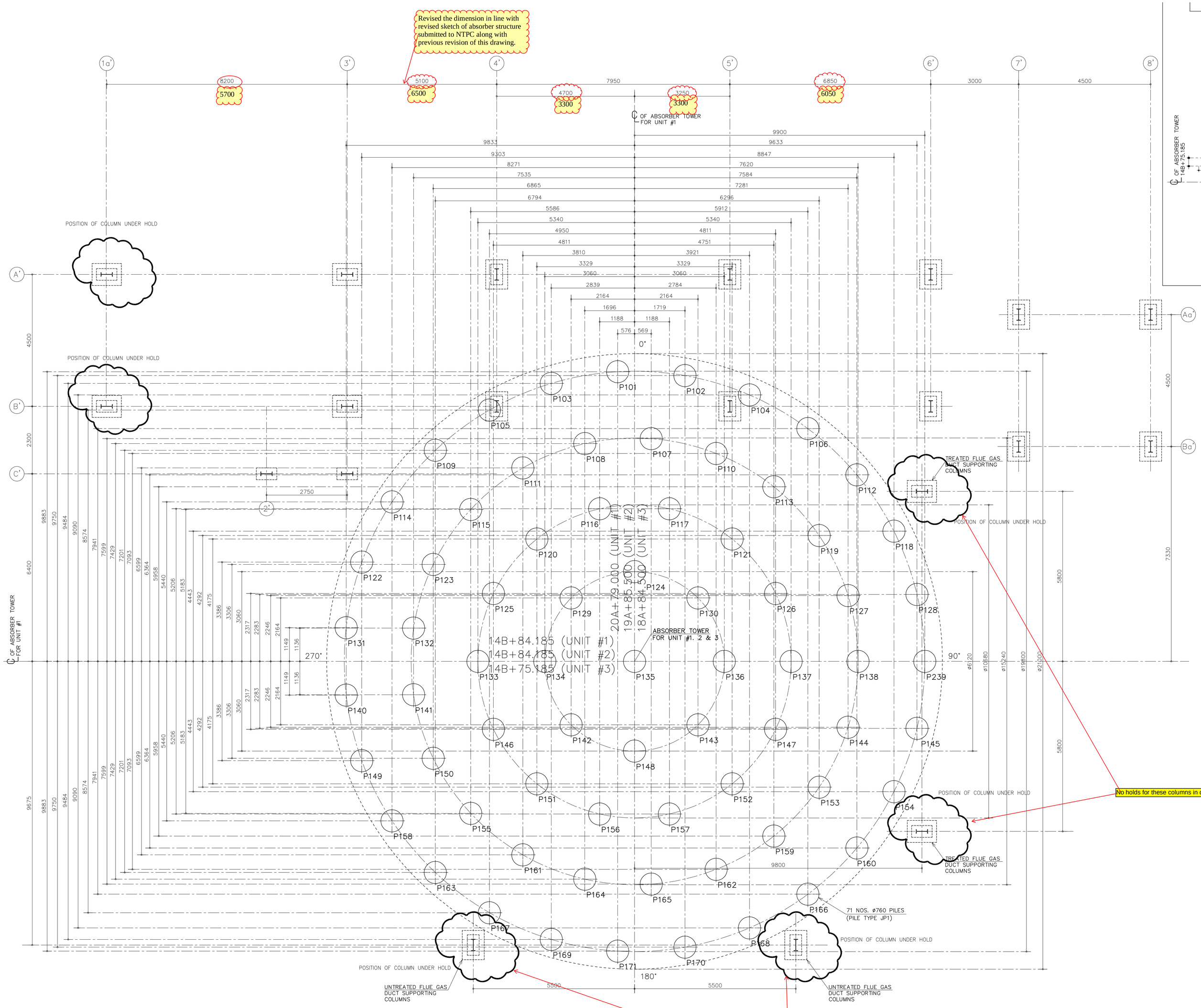

PILE LAYOUT AT −1.750M LEVEL (PILE CUTOFF LEVEL −1.675M LEVEL)
1:50

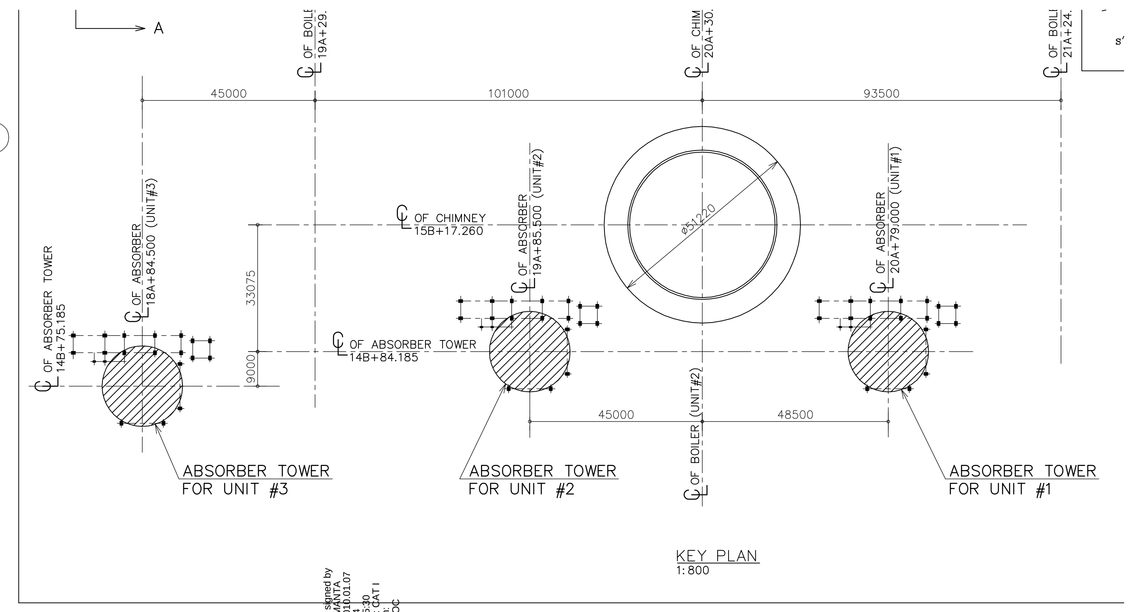

KEY PLAN
1:800

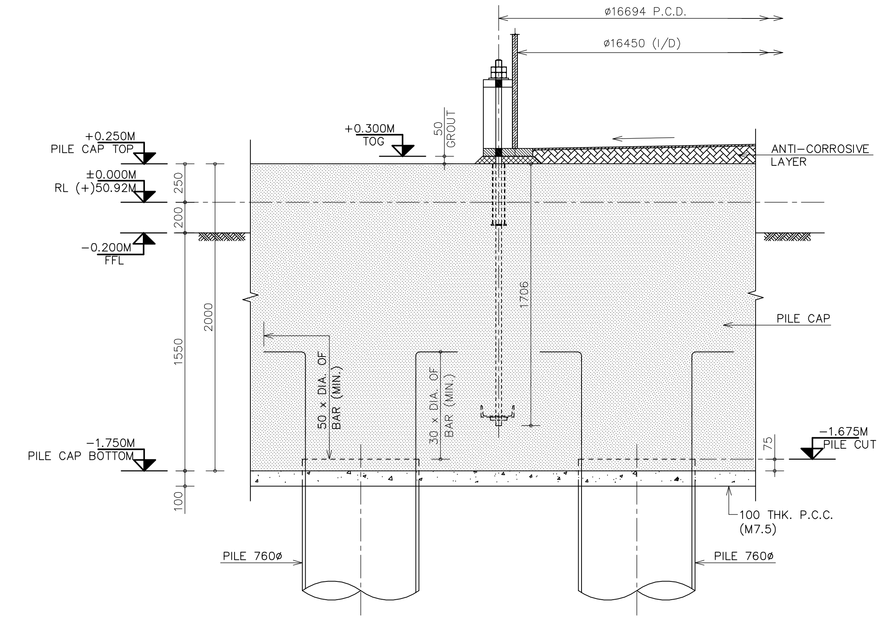

TYPICAL PILE ANCHORAGE DETAIL ALONG WITH PILE CUT OFF LEVEL
ALL PILES CUT OFF LEVEL AS SHOWN IN THIS TYPICAL DETAIL (UNO)
1:20

SPECIAL NOTE:−

- ALL TERMINAL POINTS OF CIVIL WORKS OF FGD SYSTEM SHALL BE INDICATED IN NO. 4610−101−POC−A−002.

GENERAL NOTES

1. ALL DIMENSION ARE IN MILLIMETRES & ALL LEVELS ARE IN METERS ONLY. (U.N.O.)
2. DRAWINGS SHOULD NOT BE SCALED OFF, ONLY WRITTEN DIMENSIONS ARE TO BE FOLLOWED.
3. DISCREPANCY IN DRAWING, IF ANY, SHALL BE BROUGHT TO THE NOTICE OF THE SITE ENGINEERS/CONSULTING ENGINEERS, BEFORE EXECUTION OF WORK.
4. LEGEND :−

U.N.O.	UNLESS NOTED OTHERWISE
T.O.C.	TOP OF CONCRETE
N.T.S.	NOT TO SCALE
F.G.L.	FINISHED GROUND LEVEL
F.F.L.	FINISHED FLOOR LEVEL
E.G.L.	EXISTING GROUND LEVEL

5. ±0.000M LEVEL CORRESPONDS TO RL (+)50.92M.
6. FOR PILING DRAWING & PILING NOTES REFER DWG. NO. 4610−315−PVC−C−101

EXISTING PILE LAYOUT

SCHEDULE OF PILES:−

BLDG.	PILE MARK	DIA.	PILE CUTOFF ELEV. IN MTS. A	FFL	TOTAL PILE NOS. (1 X 250 mw)	CAPACITY IN TONS		
						VERTICAL	HORIZONTAL	UPLIFT
ABSORBER	P101 TO P171	760ø (PILE TYPE JP2)	−1.675M	−0.200M	71	250	12.5	80

REV.	DESCRIPTION	DRAWN	DESIGN	CHKD.	C	M	E	C&I	APPD	DATE
2	GENERALLY REVISED AS PER NTPC COMMENTS	SSP	KNS	RCA					BK	14.12.09
1	RELEASED FOR CONSTRUCTION	SSP	KNS	RCA						07.11.09

CLEARED BY

CUSTOMER NO. :

PROJECT : BONGAIGOAN−3X250MW−FLUE GAS DESULPHURIZATION SYSTEM

NTPC Limited
(A GOVERNMENT OF INDIA UNDERTAKING)
ENGINEERING DIVISION, NOIDA U.P.

NTPC DRG NO. 4610−101−03RP−PVC−B−022−SH−1

BHARAT HEAVY ELECTRICALS LTD.
UNIT: BOILER AUXILIARIES PLANT.
HANIFET − 632 406.

	NAME	SIGN
DRWN		
CHD		
APPD		

BHEL DRG NO. ---

DUCON TECHNOLOGIES, INC.
"SERVING THE INDUSTRY SINCE 1938"
FARMINGDALE, NEW YORK 11735, U.S.A.
(631) 694−1700 FAX (631) 420−4985

	NAME	SIGN
DRWN	SACHIN	
CHD	KANCHAN	
APPD	RCA	

MAGCONS CONSULTING ENGINEERS PVT. LTD.
R.C.C. CONSULTANT

TITLE : FGD SYSTEM − ABSORBER TOWER − LAYOUT OF PILES

DUCON DRG NO. DC109−5038−CL−02−001

SCALE : AS SHOWN

SHEET 01 OF 01

BULK BILL OF QUANTITY

(ROUNDED OFF TO HIGHER VALUES)

NOS.	ITEM	UNIT	QUANTITY
1.	CONCRETE M25	CU.M	691.92
2.	P.C.C. (1:4:8)	CU.M	34.969
	REINFORCEMENT		
3.	12 ϕ	MT	1.21
4.	25 ϕ	MT	0.68
5.	32 ϕ	MT	101.87

- QUANTITY FOR ABSORBER FOUNDATION 1 ONLY. SAME QUANTITY CAN BE USED FOR ABSORBER FOUNDATION 2 & 3.
- REBAR QUANTITIES ARE WITHOUT LAPS & WASTAGES AND ARE APPROXIMATE FOR BULK PROCUREMENT ONLY.

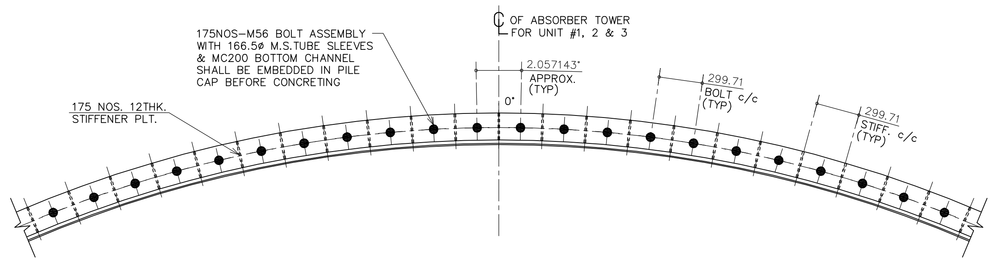

DETAIL A
1:20

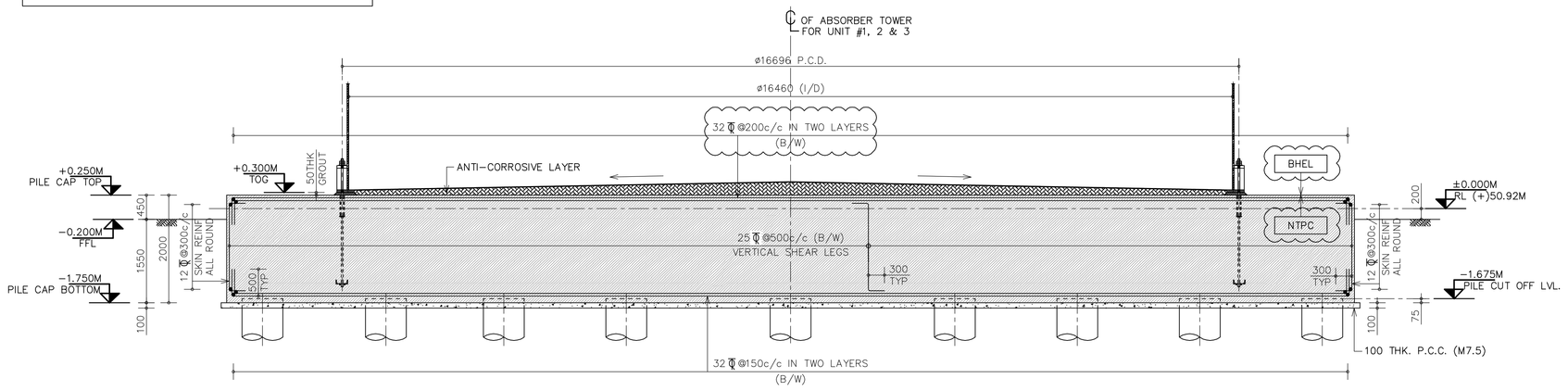

SECTION 1
1:50

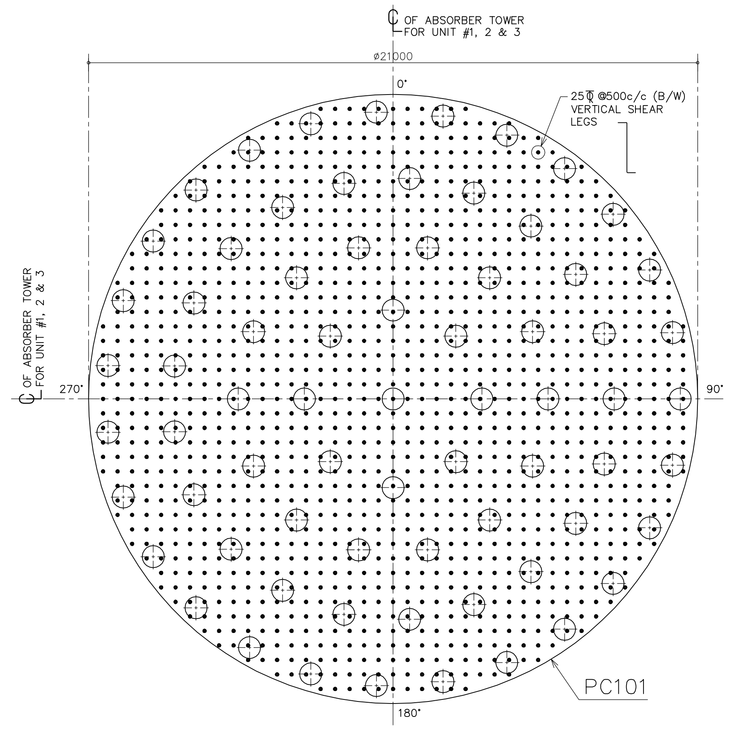

SHEAR LEG PLAN
1:100

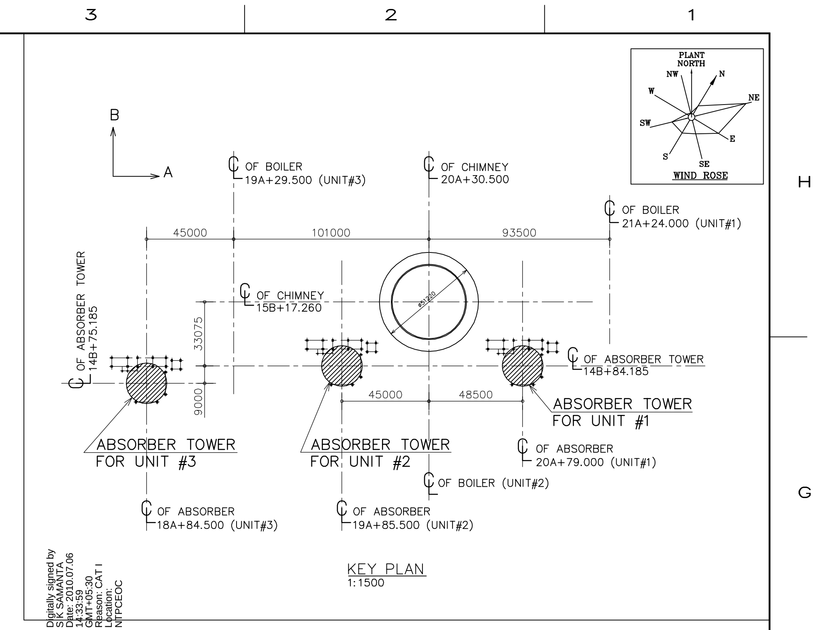

KEY PLAN
1:1500

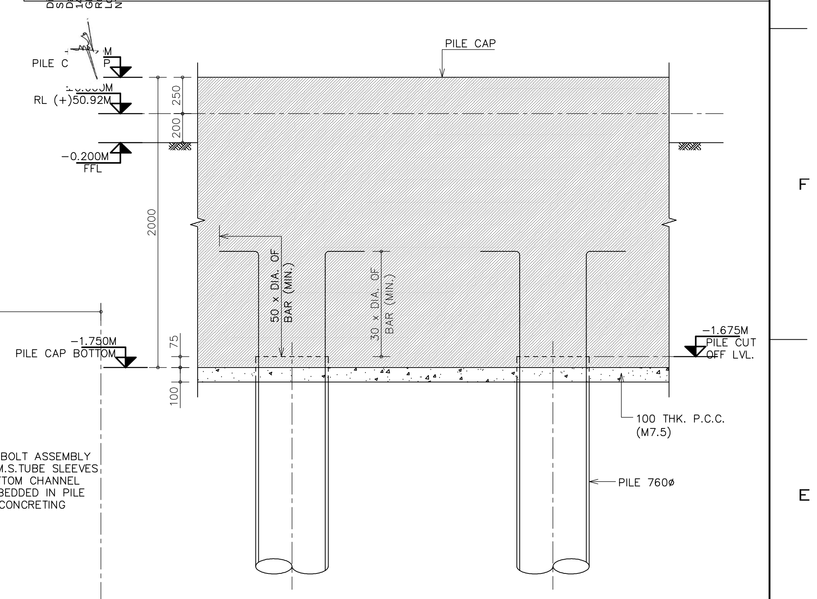

TYPICAL PILE ANCHORAGE DETAIL ALONG WITH PILE CUT OFF LEVEL
ALL PILES CUT OFF LEVEL AS SHOWN IN THIS TYPICAL DETAIL (UNO)
1:20

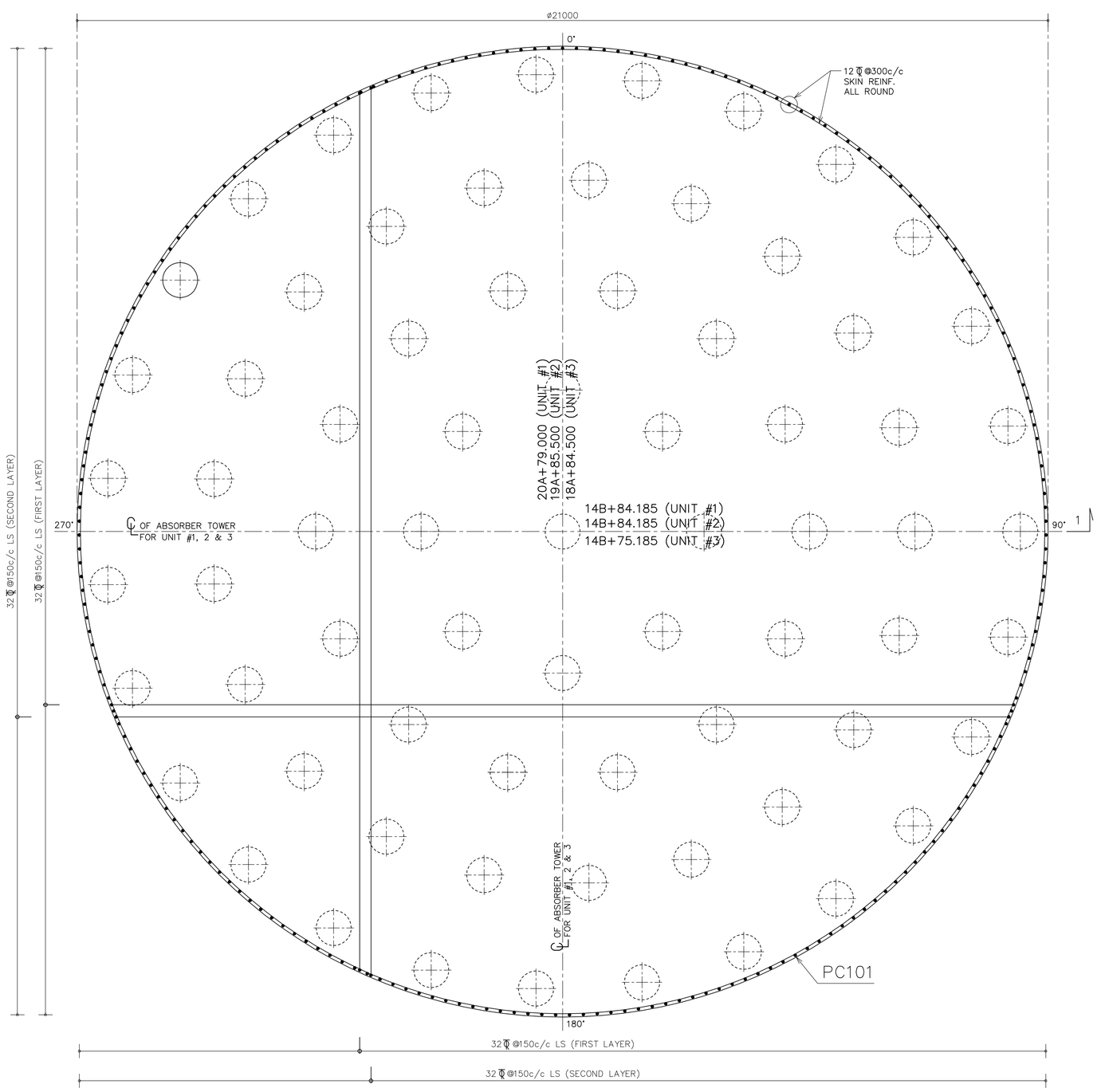

BOTTOM REINFORCEMENT PLAN AT −1.750M LEVEL
1:50

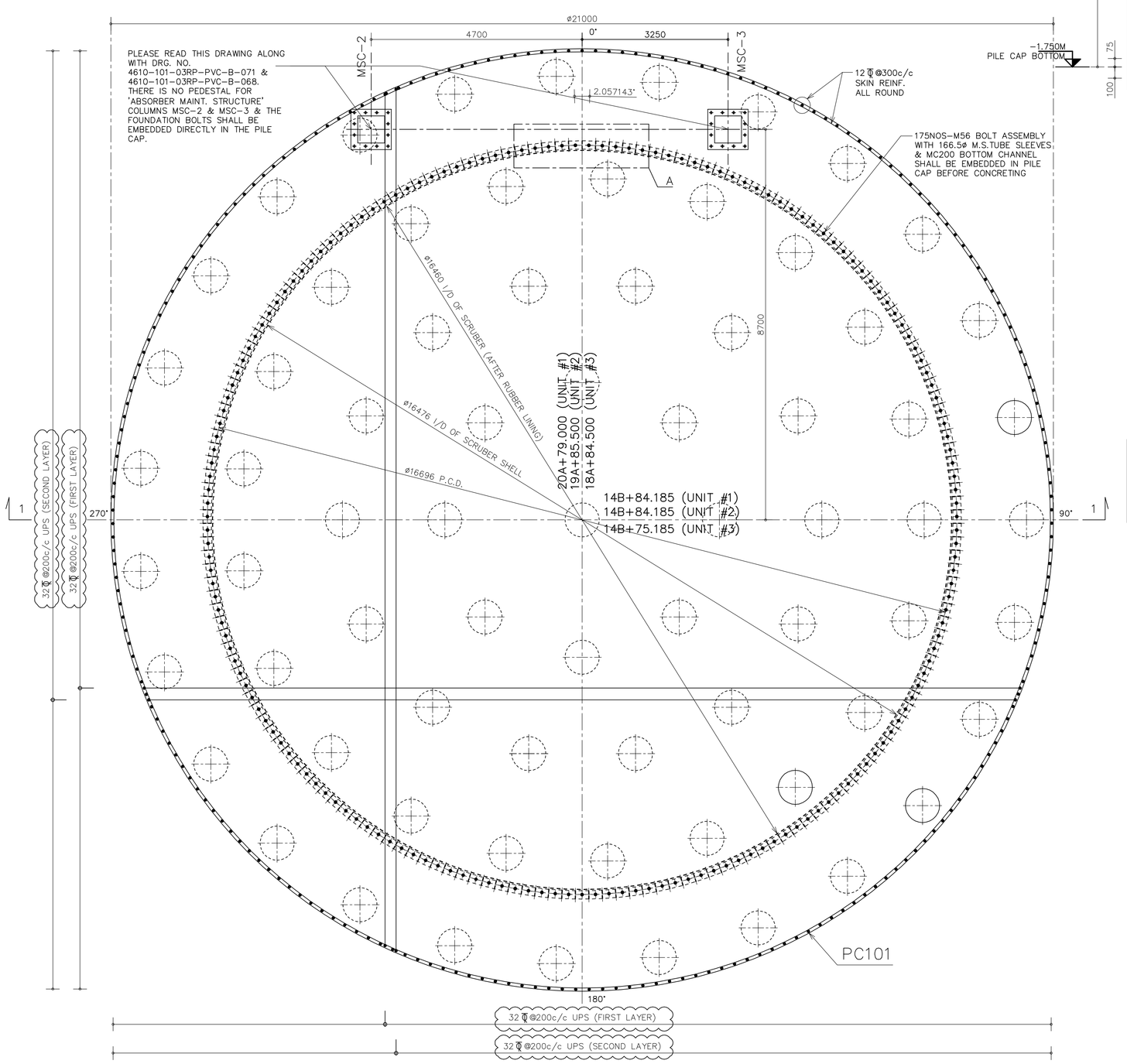

TOP REINFORCEMENT PLAN AT +0.250M LEVEL
1:50

SPECIAL NOTE:–

- ALL FOUNDATION WORKS RELATED TO FGD SYSTEMS SHALL BE EXECUTED UNDER MAINPLANT, CW & OFFSITE CIVIL WORKS PACKAGE AS PER SCOPE OF WORK, PART–A OF TECHNICAL SPECIFICATION.
- ALL TERMINAL POINTS OF CIVIL WORKS OF FGD SYSTEM SHALL BE INDICATED IN TENDER DWG. NO. 4610–101–POC–A–002.

GENERAL NOTES

1. ALL DIMENSION ARE IN MILLIMETRES & ALL LEVELS ARE IN METERS ONLY. (U.N.O.)
2. DRAWINGS SHOULD NOT BE SCALED OFF, ONLY WRITTEN DIMENSIONS ARE TO BE FOLLOWED.
3. DISCREPANCY IN DRAWING, IF ANY, SHALL BE BROUGHT TO THE NOTICE OF THE SITE ENGINEERS/CONSULTING ENGINEERS, BEFORE EXECUTION OF WORK.
4. LEGEND :–
   T.O.C. ---------- TOP OF CONCRETE
   F.G.L. ---------- FINISHED GROUND LEVEL
   E.G.L. ---------- EXISTING GROUND LEVEL
   LS ---------- LOWER SIDE
   UPS ---------- UPPER SIDE
   B/W ---------- BOTHWAY
   B/F ---------- BOTH FACE
   NF ---------- NEAR FACE
   FF ---------- FACE FACE
5. ±0.000M LEVEL CORRESPONDS TO RL (+)50.92M.
6. GRADE OF CONCRETE FOR PILE AND PILE CAP SHALL BE M25 AS PER IS 456 – 2000
7. ALL REINFORCEMENT SHALL BE OF GRADE Fe 500 HIGH YIELD STRENGTH DEFORMED BARS HAVING MINIMUM STRENGTH OF 5000 KG/CM. SQ. CONFIRMING TO I.S. 1786
8. CLEAR COVER TO MAIN REINFORCEMENT SHALL BE AS FOLLOWS.
   a) FOR PILE CAP BOTTOM --- 100mm
   b) FOR PILE CAP SIDES --- 50mm
   c) FOR PILE CAP TOP --- 50mm
9. FOR PILING DRAWING & PILING NOTES REFER DWG. NO. 4610–315–PVC–C–101
10. PEDESTAL & FDN. BOLTS FOR ABSORBER MAINT. PLATFORM SHALL BE CAST WITH PILECAP.
11. ALL BOLTS SHALL BE EMBEDDED INTO PILECAP. SAME SHALL BE CHECKED & APPROVED BY BHEL BEFORE CONCRETING.
12. FOR GENERAL NOTES OF CONCRETE WORKS REFER DWG. NO. 4610–315–POC–C–0052

REV.	DESCRIPTION	DRAWN	DESIGN	CHKD.	C	M	E	C&I	APPD	DATE
3	REVISED AS PER NTPC'S COMMENTS.	SSP	KNS	RCA						12.05.10
2	REVISED AS PER NTPC'S COMMENTS.	SSP	KNS	RCA						27.04.10
1	RELEASED FOR APPROVAL	SSP	KNS	RCA						13.02.10
0	RELEASED FOR APPROVAL	SSP	KNS	RCA						13.02.10

CLEARED BY

R.C.C CONSULTANT. :

MAGCONS CONSULTING ENGINEERS PVT. LTD.

CUSTOMER NO. :

PROJECT : BONGAIGOAN–3X250MW–FLUE GAS DESULPHURIZATION SYSTEM

NTPC Limited
(A GOVERNMENT OF INDIA UNDERTAKING)
EASTERN REGION, INDIA G.P.

NTPC DRG NO. 4610-101-03RP-PVC-B-022-SH-2 REV 01

BHARAT HEAVY ELECTRICALS LTD.
UNIT: BOILER AUXILIARIES PLANT.
RANIPET – 632 406.

	NAME	SIGN	DATE
DRWN			
CHD			
APPD			

BHEL DRG NO. REV 01

DUCON TECHNOLOGIES, INC.
"BRINGING THE INDUSTRY SINCE 1969"
FARMINGDALE, NEW YORK 11735, U.S.A.
(631) 694-1700 FAX (631) 420-4985

	NAME	SIGN	DATE
DRWN	SACHIN		13.02.2010
CHD	KANCHAN		13.02.2010
APPD	RCA		13.02.2010

TITLE : FGD SYSTEM – ABSORBER TOWER – R.C. DETAILS & SECTION OF PILE CAP FOUNDATION

DUCON DRG NO. DC109–5038–CL–02–002

SCALE : AS SHOWN

SHEET 01 OF 01 REV. 3

EXISTING PILECAP LAYOUT

PROPOSED TENTATIVE LAYOUT OF NEW AND EXISTING PILE AND PILECAP

unit#1 & 3

NTPC–BONGAIGAON, 3X250MW
(EXISTING AND NEW PROPOSED PILE LOCATIONS)

REV: 02

DT: 12.09.19
SHEET: 01/01

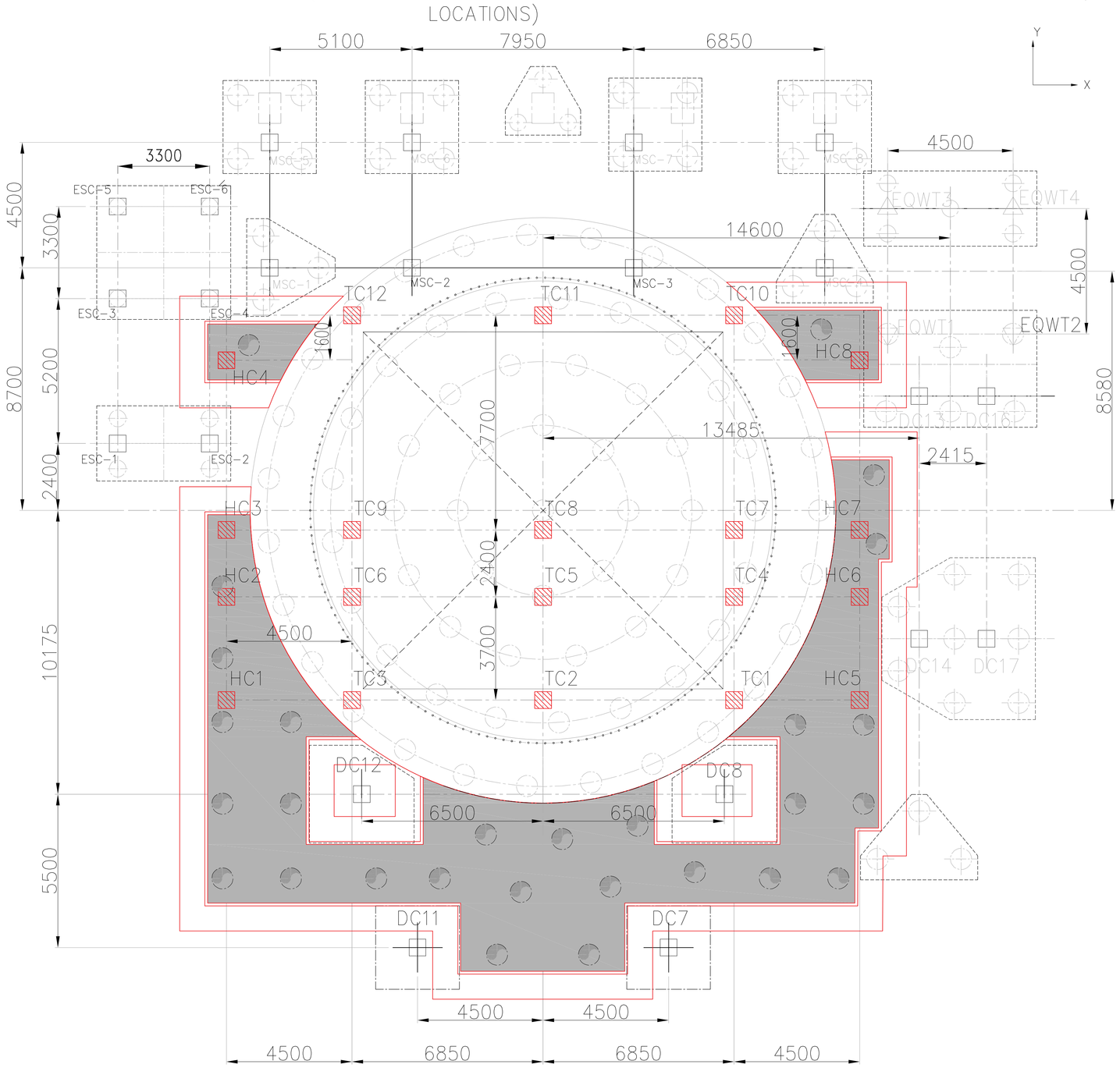

NEW PROPOSED PILECAP

NEW 760DIA PILE

NOTE: THE NEW PILE(760DIA) LOCATIONS SHOWN ARE TENTATIVE ONLY FOR PROPOSAL PURPOSE.
THE EXACT PILE LAYOUT WILL BE DECIDED DURING CONTRACT STAGE ONLY

UNIT#2

NTPC–BONGAIGAON, 3X250MW
(EXISTING AND NEW PROPOSED PILE LOCATIONS)

REV: 02

DT: 12.09.19
SHEET: 01/01

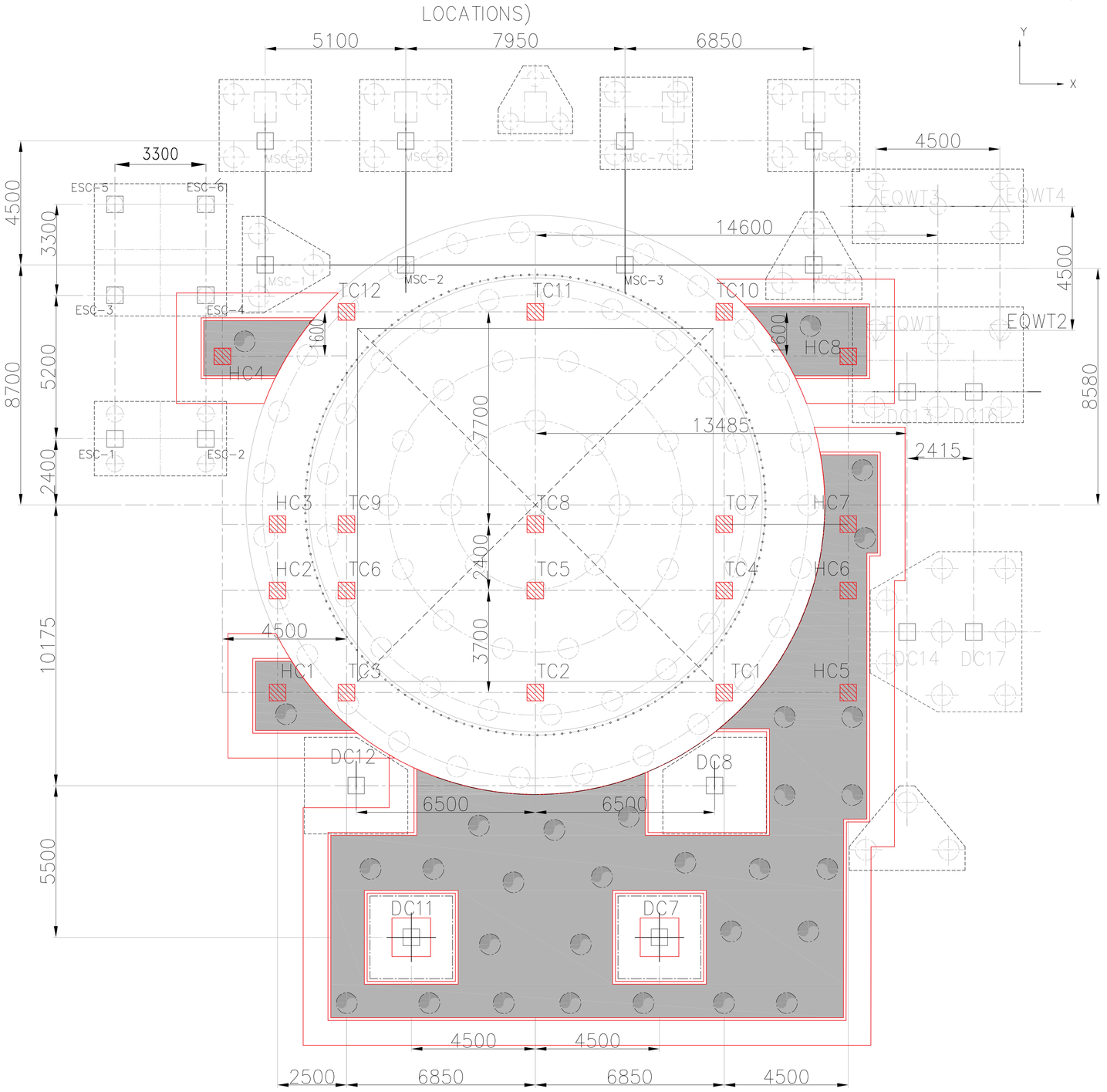

NEW PROPOSED PILECAP

NEW 760DIA PILE

NOTE: THE NEW PILE(760DIA) LOCATIONS SHOWN ARE TENTATIVE ONLY FOR PROPOSAL PURPOSE.
THE EXACT PILE LAYOUT WILL BE DECIDED DURING CONTRACT STAGE ONLY