provided by the contractor. Temperature compensation for thermocouples shall be performed in the temperature transmitter itself.

S No.	Features	Essential/Minimum Requirements
1.	Output	2-wire (power supply from input card of control system) with 4-20mA output with superimposed HART protocol signal
2.	Input	Same transmitter shall be capable to handle Pt-100 RTD, Thermocouples –K, R & ,S types (Selectable through HART terminal/calibrator)
	Isolation	Min 500 VAC
	EMC compatibility	As per EN 61326
	Power supply	24 V C +/- 10%
3.	Housing	Weather proof as per IP-67, metallic housing with durable corrosion resistant coating
4.	Electrical connection	Plug and Socket connector except hazardous area
5.	Diagnostics & display	Self-Indicating feature and digital display on transmitter
6.	Operating Ambient temperature	85 deg C without display. 70 deg C with display.
7.	Mounting	2 inch pipe mounting with Canopy.
8.	Accessories	As required by service and operating condition.
9.	Composite Accuracy	(Refer note 2) RTD =<0.25% of 0-250 deg C span T/C-K type =<0.2% of 0-600 deg C span CJC accuracy (for thermocouples) shall be =< 1 deg C

Notes:

1. In case of failure (open or burn-out) of RTD/thermocouple, transmitter shall provide low temperature output.
2. Dual input temperature transmitter shall have bump less changeover facility to second sensor in case first sensor fails. This changeover is to be alarmed in control system.
3. Composite accuracy is to be calculated as summation of all applicable accuracies of temperature transmitter for converting sensor input to output (e.g., A/D accuracy, basic accuracy, digital accuracy, etc.) and temperature effect on these

Estelar

accuracies at ambient temperature of 50 deg C, based on the figure/ formula given in the standard product catalogue for span as specified above for various types of temperature elements specified. All such accuracy/ temperature effect figures in catalogue shall be first converted to deg C, and then percentage of this converted accuracy in specified span shall be calculated to compare with the specified composite accuracy figures. All temperature transmitters shall be interchangeable (i.e. can be used for either RTD or thermocouple) and composite accuracy shall be met for each type of input as specified above.

4. Above mentioned parameters/features of offered models shall be strictly as defined in standard published catalogue of the manufacturer only.

5. Dual input temperature transmitters can also be accepted in place of single input TT.

15.00.00 **Vibration Monitoring System**

The Vibration Monitoring System shall be furnished on a system basis including, vibration transducers, phase marker sensor with low noise flexible cables in flexible conduit, terminated in local terminal boxes, necessary pre-amplifier/electronics mounted in local weather proof boxes, vibration monitors, mounting racks and cabinets etc. The vibration monitoring system shall include all power supplies, interconnecting cabling, calibration equipment, indicators, integrating units, signal conditioning devices and all other accessories, erection hardware required for monitoring of Vibration at each point. The contractor shall provide the vibration pads.

Contractor can offer up to Four Channel Vibration monitors. The allocation of channels shall be such that loss of one monitor shall not affect more than one side of the bearing of one machine. In the case of more than two channel Vibration monitors being provided by the Contractor, then one spare monitor shall be provided mounted in the panel to take care of immediate replacement of any failed monitors. Offered vibration monitors shall be modular in construction, plug in type.

Eddy current / piezoelectric type transducers shall be used. The sensors shall be either proximity or velocity or accelerometer type. However, the finally selected sensor type shall also depend on recommendation of the equipment manufacturer & suitable for application requirement which shall be finalised during detail engineering and without any extra price. Transducers shall be furnished in weatherproof housing suitable for field conditions. Cables/cabling from transducers local JB to Vibration Monitoring system in Control Room/Control Equipment Room shall be provided by the Contractor.

Vibration monitoring system shall give one no. buffered output of 4-20 mA DC and two no. of buffered raw signal for each point monitored and one no. of buffered raw signal for each phase marker sensor. The 4-20mA signal shall be suitable for use as an input to DDCMIS, linear in proportion to vibration velocity or displacement. Raw buffered signal(s) shall be suitable for archiving and analysis. Monitor shall provide vibration indication calibrated in velocity units along with provisions of changing to displacement unit (field-programmable) for each measurement point in both horizontal & vertical planes. The generation of alarm and trip signals is not envisaged in vibration monitoring system, the same shall be derived in DDCMIS. However in case of vibration initiated protection of equipments, OEM standard and proven practices shall also be considered.

Estelar

The vibration monitor racks with power supplies shall be mounted in a separate self standing cabinet to be located in control room. The number of racks and power supplies shall be such that on failure of a single power supply/module, not more than four monitors shall be affected. The vibration monitoring cabinet shall be fed from redundant 24V DC feeders with auto changeover scheme.

The power supply arrangement for monitors shall ensure that failure of one power supply shall not affect any monitoring function in the system. Also any power supply failure /earth fault in any of the monitors will be isolated without affecting other monitors/ common power supply. If 230 V AC UPS power supply is required for panel PC/ desktop PC, UPS/Mini UPS for the same shall be provided by the contractor.

The functional requirement for vibration monitoring system shall include but not be limited to the following:

- Vibration monitor front face status indications shall be available for indications of healthy conditions of pick up circuit, monitor circuit and power supply. On sensor fault/wire break in the sensor circuit, the system shall have the feature of identifying the same through suitable means like the signal forced to a value less than 4 mA. In case, such a feature is not available then suitable contact shall be provided from the monitor for sensor fault.
- The facility shall be available for online functional checking of monitors.
- All vibration monitoring equipment shall be functionally tested for circuit continuity and output response. All the components & interconnection cables shall be tested to ensure compliance with the specification requirements & all other applicable codes & standards.

In case it is the proven standard practice of a Contractor to provide vibration monitoring PC with TFT LCD monitor, instead of dedicated monitors with the signal conditioning equipment in control equipment room, the same shall also be acceptable. However, all relevant functional requirements detailed above shall be met and the system shall be subject to Employer's approval.

16.00.00 FIELD INSTRUMENTS BASED ON FIELDBUS

The following instruments shall be connected to DDCMIS through fieldbus i.e. FOUNDATION Fieldbus/PROFIBUS PA protocol complying to IEC 61158 directly from transmitter.

16.01.00 Electronic Transmitter for Pressure, Differential Pressure and DP based Flow / Level measurements.

S No.	Features	Essential/Minimum Requirements
1.	Type of Transmitter	FOUNDATION Fieldbus/PROFIBUS PA based output

Estelar

CLAUSE NO.	TECHNICAL REQUIREMENTS		
	2	Accuracy	± 0.060 % of calibrated range (minimum) for calibrated range greater than 400 mmwc. +0.065% of calibrated range (minimum) for calibrated range greater than 250 kg/cm2. ± 0.10 % of calibrated range (minimum) for calibrated range less than 400 mmwc.
	3.	Stability	0.25 % of calibrated range for 10 years for calibrated range greater than equal to 400 mmwc on standard conditions of manufacturer. 0.2 % of calibrated range for 1 years for calibrated range less than 400 mmwc on standard conditions of manufacturer. 0.15% of calibrated range for 5 years for DPT with static pressure greater than 250 kg/cm2.
	4	Turn down	50:1 for greater than or equal to span of 400mmwcl. 20:1 for span below 400mmwcl. 10:1 for span greater than 250 kg/cm2
	(Above mentioned (2,3,4) parameters/features of offered models shall be strictly as defined in standard published catalogue of the manufacturer only).		
	5	Housing	Weather proof as per IP-67, metallic housing with durable corrosion resistant coating
	6.	Electrical connection	½" NPT(F) FOUNDATION Fieldbus/PROFIBUS PA compatible
	7.	Process connection	½" NPT (F)
	8.	Operating Ambient temperature	85 deg C without display. 70 deg C with display.
		Overpressure	150% of max operating pressure
	9	Accessories	-Diaphragm seal, pulsation dampeners, syphon etc. as required by service and operating condition. -2 valve manifold for absolute & gauge pressure transmitters, -3-valve for DP and 5 valve manifold for level/flow applications. -The valve manifold shall be non-integral type. -For hazardous area, enclosure as described in NEC article 5.

Estelar

10.	Mounting	2 inch pipe mounting with Enclosure/Rack/Canopy.
11.	Diagnostics & display	Self-Indicating feature and digital display on transmitter

Notes

- For primary air/ secondary air/flue gas/ furnace pressure applications, DP type transmitters shall be provided for pressure measurement below 2000 mmwc.
- LVDT type is not acceptable.
- Where the process fluids are corrosive, viscous, solid bearing or slurry type, diaphragm seals shall be provided. Parts below the diaphragm shall be removable for cleaning. The entire volume above the diaphragm shall be completely filled with an inert liquid suitable for the application.

16.02.00 Temperature Transmitter

16.02.01 Single Input /Dual Input Temperature transmitter

Temperature transmitter shall be provided which shall be fully compatible with thermocouples and RTDs being provided by the contractor. Temperature compensation for thermocouples shall be performed in the temperature transmitter itself. Transmitters shall be capable of withstanding ambient temperature up to 85 deg C.

Following specifications are applicable for dual input/single input temperature transmitter.

S No.	Features	Essential/Minimum Requirements
1.	Output	FOUNDATION fieldbus /PROFIBUS PA
2.	Input	Same transmitter shall be capable to handle Pt-100 RTD, Thermocouples –K, R & ,S types
3.	Housing	Weather proof as per IP-67, metallic housing with durable corrosion resistant coating
4.	Electrical connection	½" NPT(F) FOUNDATION Fieldbus/PROFIBUS PA compatible
5.	Diagnostics & display	Self-Indicating feature and digital display on transmitter
6.	Operating Ambient temperature	85 deg C without display. 70 deg C with display.

Estelar

CLAUSE NO.	TECHNICAL REQUIREMENTS

7. Mounting — 2 inch pipe mounting with Canopy.

8. Accessories — As required by service and operating condition.

9. Composite Accuracy — (Refer note 2)

RTD	=<0.25% of 0-250 deg C span
T/C-K type	=<0.2% of 0-600 deg C span

CJC accuracy (for thermocouples) shall be =< 1 deg C

Notes:

1. In case of failure (open or burn-out) of RTD/thermocouple, transmitter shall provide low temperature output.
2. Dual input temperature transmitter shall have bump less changeover facility to second sensor in case first sensor fails. This changeover is to be alarmed.
3. Composite accuracy is to be calculated as summation of all applicable accuracies of temperature transmitter for converting sensor input to output (e.g., basic accuracy, digital accuracy, etc.) and temperature effect on these accuracies at ambient temperature of 50 deg C, based on the figure/ formula given in the standard product catalogue for span as specified above for various types of temperature elements specified. All such accuracy/ temperature effect figures in catalogue shall be first converted to deg C, and then percentage of this converted accuracy in specified span shall be calculated to compare with the specified composite accuracy figures. All temperature transmitters shall be interchangeable (i.e. can be used for either RTD or thermocouple) and composite accuracy shall be met for each type of input as specified above.
3. Above mentioned parameters/features of offered models shall be strictly as defined in standard published catalogue of the manufacturer only.
4. Dual input temperature transmitters can also be accepted in place of single input TT.

Estelar

Notes ***(Common for a) to d) above):-***

1. In case of failure (open or burn-out) of RTD/thermocouple, temp. Transmitter shall provide low temperature output.

2. Composite Accuracy is to be calculated as summation of all applicable accuracies of temp transmitter, for converting sensor input to output in 4-20 mA (e.g., basic accuracy, digital accuracy, D/A accuracy, etc.) and temperature effect on these accuracies at ambient temperature of 50 deg C, based on the figure/ formula given in the standard product catalogue for span as specified above for various types of Temperature Elements specified. All such accuracy/ temp effect figures in catalogue shall be first converted to deg C, and then percentage of this converted accuracy in specified span shall be calculated to compare with the specified composite accuracy figures. All temperature transmitters are to be interchangeable (i.e. can be used for either RTD or thermocouple) and composite accuracy shall be met for each type of input specified in (i) & (ii).

4.00.00 **SPECIFICATIONS FOR PR. GAUGE, D.P. GAUGE, TEMP. GAUGE AND LEVEL GAUGE.**

Sl. No	**FEATURES**	**ESSENTIAL/MINIMUM REQUIREMENTS**		
		Pr. Gauge/ DP Gauge/ Draught gauges	Temperature Gauge	Level Gauge
1	Sensing Element	Bourdon for high pressure, Diaphragm/ Bellow for low pr.	Inert gas actuated/ Liquid filled other than mercury	Tempered * toughened Borosilicate gauge glass steel armoured reflex or transparent type.
2	Material of sensing element	SS 316	SS 316	
3	Material of movement	SS 304	SS 304	
4	Body material	Die-cast aluminium	Die-cast aluminium	Forged carbon steel/304 SS
5	Dial size	150mm	150 mm	Tubular covering entire range
6	End connection	1/2 inch NPT (M)	1/2 inch or 3/4 inch NPT (M).	Process connection as per ASME PTC and drain/vent 15 NB

Estelar

7	Accuracy	±1% of span	± 1% of span	± 2%
8	Scale	Linear, 270° arc graduated in metric units	Linear, 270° arc graduated in °C	Linear vertical
9	Range selection	Shall cover 125% of max. operating press	Shall cover 125% of max. operating temp	Shall cover max. Operating level.
10	Over range	125% of FSD	125% of FSD	-
11	Housing	Weather and dust proof as per IP-55	Weather and dust proof as per IP-55	CS/304 SS leak proof
12	Zero/span adjustment	Provided	Provided	–
13	Identification	Engraved with service legend or laminated phenolic name plate		
14	Accessories	Blow out disc, siphon, snubber, pulsation dampener, chemical seal (if required by process) gauge isolation valve	SS Thermowell	Gasket for all KEL-F shield for transparent type vent and drain valves of Steel/SS as per CS/Alloy process Requirement.
Notes:-				

*Bicolour type level gauges will be provided for applications involving steam and water except for condensate and feed water services.

Length of gauge glass shall not be more than 1400 mm. If the vessel is higher, multiple gauge glasses with 50 mm overlapping shall be provided.

Where the process fluids are corrosive, viscous, solid bearing or slurry type, diaphragm seals shall be provided. Parts below the diaphragm shall be removable for cleaning. The entire volume above the diaphragm shall be completely filled with an inert liquid suitable for the application.

Estelar

9.05.00 The Contractor shall take full care while laying / installing cables as recommended by cable manufacturers regarding pulling tensions and cable bends. Cables damaged in any way during installation shall be replaced at the expense of the Contractor.

10.00.00 FIELD MOUNTED LOCAL JUNCTION BOXES

(i)	No. of ways	12/24/36/48/64/72/96/128 with 20% spares terminals.
(ii)	Material and Thickness	4mm thick Fiberglass Reinforced Polyester (FRP).
(iii)	Type	Screwed at all four corners for door. Door gasket shall be of synthetic rubber.
(iv)	Mounting clamps and accessories	Suitable for mounting on walls, columns, structures etc. The brackets, bolts, nuts, screws, glands required for erection shall be of SS, included in Bidders scope of supply.
(v)	Type of terminal blocks	Rail mounted cage-clamp type suitable for conductor size upto 2.5 mm^2. A M6 earthing stud shall be provided.
(vi)	Protection Class	IP: 55 minimum for indoor & IP-65 minimum for outdoor applications.
(vii)	Grounding	To be provided.
(viii)	Color	RAL 7035

11.00.00 CONDUITS

11.01.00 Conduits shall be generally used for interconnecting cables from field instruments to Local JB's. All rigid conduits, couplings and elbows shall be hot dipped galvanised rigid mild steel in accordance with IS: 9537 Part-I (1980) and Part-II (1981). The conduit interior and exterior surfaces shall have continuous zinc coating with an overcoat of transparent enamel lacker or zinc chromate. Flexible conduit shall be heat resistant **terne coated steel** with , water leak, fire and rust proof protected *for the areas of* Mills,Drum, Main Steam, RH steam Air Heaters and Furnace, BFPDT's .

And for remaining applications, water leak, fire and rust proof flexible GI conduits shall be provided. The temperature rating of flexible conduit shall be suitable for actual application.

11.02.00 All rigid conduit fittings shall conform to the requirements of IS: 2667, 1976. Galvanized steel fitting shall be used with steel conduit. All flexible conduit fittings shall be liquid tight, galvanized steel. The end fittings shall be compatible with the flexible conduit supplied.

11.03.00 Conduit sealing, explosion proof, dust proof and other types of special fittings shall be provided as required by these specifications and shall be consistent with the area and equipment with which they are installed. Fittings installed outdoors and in damp locations shall be sealed and gasketed. Hazardous area fittings and conduits sealing shall conform with NEC requirements for the area classification.

11.04.00 Contractor shall provide double locknuts on all conduit terminations not provided with threaded hubs and couplings. Water tight conduit unions and rain tight conduit hubs shall be

Estelar

The overload capacity of the transformer and voltage stabilizer shall not be less than 300% for 200 millisecond duration. The voltage stabilizer shall employ servo-controlled circuitry and shall maintain the specified output voltage for 0-100% load with maximum input voltage variations as indicated above. The efficiency of the stabiliser shall be 95% or better.

The type and other details shall be subject to Employer's approval.

9.06.05 **AC Distribution Board (ACDB)**

The details of the AC distribution board, i.e. exact, rating and number of feeders etc. of the 2x100% ACDB shall be designed to cater to the requirements of Contractors systems. 25% Spare feeders of each type and rating to be provided in each ACDB.

9.06.06 The batteries shall be heavy duty Nickel-cadmium type and shall be sized for one hour of full load operation during non-availability of AC supply / chargers. The Ni-Cd batteries shall conform to IS: 10918. The batteries shall be sized as per relevant IEEE Standards. For sizing calculation, an aging factor of 0.8 and a temperature correction factor as per manufacturer's standard at 4 deg. C electrolyte temperature (Based on temperature characteristics curve to be submitted by the Contractor at a temperature of 4 deg. C). Capacity factor, Float Correction Factor, as per Battery Supplier Standard, shall be taken into consideration, if applicable and ambient temperature shall be considered as the electrolytic temperature. The sizing of the battery shall be as approved by Employer during detailed engineering. However, Contractor shall consider a suitable voltage drop from battery room to ACDB and ACDB to load, while sizing the battery.

10.00.00 **CONTROL CABINETS / PANELS / DESKS**

10.01.00 The cabinets shall be IP-22 protection class. The Contractor shall ensure that the packaging density of equipment in these cabinets is not excessive and abnormal temperature rise, above the cabinet temperature during normal operation or air-conditioning failure, is prevented by careful design. This shall be demonstrated to the Employer during the factory testing of the system. The Contractor shall ensure that the temperature rise is limited to 10 deg. C above ambient and is well within the safe limits for system components even under the worst condition and specification requirements for remote I/O cabinets. Ventilation blowers shall be furnished as required by the equipment design and shall be sound proof to the maximum feasible extent. If blowers are required for satisfactory system operation, dual blowers with blower failure alarm shall be provided in each cabinet with proper enclosure and details shall be furnished with proposal. Suitable louvers with wire mesh shall be provided on the cabinet.

10.01.01 The cabinets shall be designed for front access to system modules and rear access to wiring and shall be designed for bottom entry of the cables.

Estelar

CLAUSE NO.	TECHNICAL REQUIREMENTS
10.01.02	The cabinets shall be totally enclosed, free standing type and shall be constructed with minimum 2 mm thick steel plate frame and 1.6 mm thick CRCA steel sheet or as per supplier's standard practice for similar applications, preferred height of the cabinet is 2200 mm. The cabinets shall be equipped with full height front and rear doors. The floor mounting arrangement for other cabinets shall be as required by the Employer and shall be furnished by the Contractor during detailed engineering.
10.01.03	Cabinet doors shall be hinged and shall have turned back edges and additional braking where required ensuring rigidity. Hinges shall be of concealed type. Door latches shall be of three-point type to assure tight closing. Detachable lifting eyes or angles shall be furnished at the top of each separately shipped section and all necessary provisions shall be made to facilitate handling without damage. Front and rear doors shall be provided with locking arrangements with a master key for all cabinets. If width of a cabinet is more than 800 mm, double doors shall be provided.
10.01.04	Two spray coats of inhibitive epoxy primer-surface shall be applied to all exterior and interior surfaces. A minimum of 2 spray coats of final finish colour shall be applied to all surfaces. The final finished thickness of paint film on steel shall not be less than 65-75 micron for sheet thickness of 2 mm and 50 microns for sheet thickness of 1.6 mm. The finish colors for exterior and interior surfaces shall conform to following shades: (a.) Exterior:- As per RAL 9002 (End panel sides RAL 5012), to be finalised during detailed engineering. (b.) Interior:- Same as above.
10.01.05	Paint films which show sags, checks or other imperfections shall not be acceptable.
10.01.05	As an alternative, single coat of anodic dipcoat primer along with single textured powder coating with epoxy polyester meeting the thickness requirement is also acceptable.

Estelar

CLAUSE NO.	TECHNICAL REQUIREMENTS
11.03.00	Facility of audio annunciation shall be provided in OWS upon the occurrence OWS alarms irrespective of whether alarms are displayed or not. Facility to disable the audio annunciation shall be provided.
11.04.00	At least three levels of alarm priority shall be available which will be displayed in different colour. It shall be possible to display & print alarms of any of the three levels.
11.05.00	Alarm boxes shall be provided in each display to alert the operator about an alarm when he is viewing some other picture. No of alarm boxes shall be finalised during detailed engineering for each process area & each priority therein.
11.06.00	The annunciator sequence shall conform to ISA sequence ISA-2A.
12.00.00	**SOFTWARE DOCUMENTATION AND SOFTWARE LISTINGS**
12.01.00	All technical manuals, reference manuals, user's guide etc., in English required for modification/editing/addition/deletion of features in the software of the PLC System shall be furnished. The Contractor shall furnish a comprehensive list of all system/application software documentation after system finalization for Employer's review and approval.
12.02.00	All The software listings including Source code for application software, All special - to-project data files etc. shall be submitted by the Contractor.
13.00.00	**SOFTWARE LICENCES**
	The Contractor shall provide software license for all software being used in Contractor's System. The software licenses shall be provided for the project (e.g. organisation or site license) and shall not be hardware/machine-specific. That is, if any hardware/machine is upgraded or changed, the same license shall hold good and it shall not be necessary for Employer to seek a new license/renew license due to upgradation/change of hardware/machine in Contractor's System at site. All licenses shall be valid for the continuous service life of the plant. As a customer support, the Contractor shall periodically inform the designated officer of the Employer about the software upgrades/new releases that would be taking place after the system is commissioned so that if required, same can be procured & implemented at site.

Estelar

CLAUSE NO.	TECHNICAL REQUIREMENTS

5.00.00 PROCESS ACTUATED SWITCHES

FEATURES	ESSENTIAL / MINIMUM REQUIREMENTS		
	Pressure/ Draft Switches/ DP Switches	Temperature switches	Level switches
Sensing Element	Piston actuated for high pressure and diaphragm or bellows for low pr./ vacuum	Vapor pressure sensing, liquid filled bellow type with SS bulb and capillary (5 m minimum, to suit application)	Capacitance types, float type, conductivity type, RF type, Ultrasonic type as per suitability to the application. .
Material	316 SS	Bulb 316 SS/ capillary 304 SS	316 SS
End connection	½ inch NPT (F)	½ inch NPT (F)	Manufacturer standard
Over range/ proof pressure	150% of maximum operating pr.	-	150% of maximum operating pr.
Repeatability	+/- 0.5% of full range		
No. of contacts	2 No.+2NC. SPDT snap action dry contact		
Rating of contacts	60 V DC, 6 VA (or more if required by DDCMIS)		
Elect. Connection	Plug in socket.		
Set point adjustment	Provided over full range.		
Dead band adjustment	Adjustable/ fixed as per requirement of application.		
Enclosure	Weather and dust proof as per IP-55, metallic housing.		
Accessories	Siphon, snubber, chemical seal, pulsation dampeners as required by process	Thermo well of 316 SS and packing glands	All mounting accessories
Mounting	Suitable for enclosure/ rack mounting or direct mounting	Suitable for rack mounting or direct mounting	-

Estelar

Power Supply (wherever required)	As per Contractor's Standard practice.

Notes :-

1) Where the process fluids are corrosive, viscous, solid bearing or slurry type, diaphragm seals shall be provided. Parts below the diaphragm shall be removable for cleaning. The entire volume above the diaphragm shall be completely filled with an inert liquid suitable for the application.

2) Pressure/ Diff pressure switches for very low press/ DP measurements can have sensor material other than SS316 in case of any technical limitation and the offered product is standard product of the manufacture for very low pressure applications.

3) Repeatability can be upto +/-1% of full range in case of switches with diaphragm seals or very low pressure/DP range.

4) The specifications of switches for air conditioning & ventilation system / process can be as per system manufacturer's standards. The manufacturer shall submit the adequate supporting documents for establishing their standard practice.

6.00.00 **SOLENOID VALVES**

Solenoid valves shall fulfill the following requirements: -

a) Type 2/3/4 way SS 316/ forged brass (depending on the application subject to Employer's approval during detailed engg.)

b) Power supply 24V DC.

c) Plug in connector connection.

d) Insulation : Class "H"

7.00.00 **Limit switches**

e) Limit switches shall be silver plated with high conductivity and non-corrosive type. Contact rating shall be sufficient to meet the requirement of Fire alarm Control System subject to a minimum of 60V, 6VA rating. Protection class shall be IP-55.

Estelar

Estelar

(e)	**Flow Switch (to be provided with isolating valves)**	
(i)	Body	Forged steel
(ii)	Extension Rod/wire	SS-304
(iii)	Sleeve and Sleeve pipe	SS-304
(iv)	Cover	Die cast aluminum
(v)	Max. working pressure	10 kg/sq.cm
(vi)	Repeatability	± 0.5%
(vii)	No. of contacts	2 NO + 2 NC
(viii)	Type of contact	Adjustable throughout the range.
(ix)	Protection class	IP – 65
(f)	**Level Switch**	
(i)	Type	Displacer operated magnetic type
(ii)	Displacer	SS – 316
(iii)	Wire rope	SS – 316
(iv)	Spring Housing Spring and sleeve pipe	SS – 316
(iv)	Cover	Cast Aluminum
(v)	No. of Contacts	2 NO + 2 NC

8.00.00 DEW POINT METER

1.	Type	:	Direct Mounting Capacitance type with change in output proportional to moisture present.
2.	Sensing Element	:	Ceramic / Aluminum Oxide sensor
3.	Service	:	Dry Air
4.	Range	:	-90 Deg.C to 10 Deg.C Dew Point Temperature
5.	Sensor Accuracy	:	± 2 Deg. C Dew Point
6.	Repeatability	:	0.5 Deg. C Dew Point
7.	Operating Ambient Temperature	:	-40 Deg C to 50 Deg C
8.	Operating Pressure	:	0- 10 kg/ Sq. cm
9.	Display	:	Combined enclosure with 5 Digit seven segments LED display.
10.	Element Filter	:	80 micron sintered stainless steel
11.	Output	:	4- 20 mA DC Loop powered
12.	Power Supply	:	24 VDC nominal
13.	Enclosure class	:	IP 65
14.	Interchangeability	:	Fully Interchangeable transmitters
15.	Accessories	:	Sampling system, cables, sensor holder, desiccant chambers, double compression fittings, ¾ " Cable gland, mounting fixture etc.

Estelar

SIGHT GLASS

Sr. No.	Description	
1.	Make	
2.	Type	Double Window
3.	Connection	Flanged
4.	Flow Directions	Horizontal
5.	Indicator	Bi- Directional Flapper
6.	Body	A106 Gr B
7.	Cover Plates	IS2062
8.	Bolts/Studs and Nuts	GI
9.	Gaskets	NON CAF
10.	Glass	Toughened
11.	Flapper	AISI 304
12.	Process Flanges	IS2062 / A105
13.	Flange rating	150#RF ANSI B16.5
14.	Tag plate	SS

Estelar

1.0 SCOPE

This specification covers the Design, Manufacture, Inspection and Testing at the manufacturer's works, proper packing for transportation and delivery to site, supervision, erection, and commissioning at site of Local Panels required for control and monitoring of the Auxiliary Plant & Equipment.

2.0 CODES AND STANDARDS

2.1 All the equipments specified herein shall comply with the requirements of the latest issue of the relevant National and International standards.

2.2 As a minimum requirement, the following standards shall be complied with:

a) IS-6005 : 1998 : Code of practice for phosphating of iron and steel.
b) IS-5 : 2007 : Colors for ready mixed paints and enamels.
c) IS-1248:2003 : Direct Acting Indicating Analog Elec Measuring Instruments.
d) IS/IEC 60947:Part 1:2004 : Low Voltage switchgear & control gear: Part-I (General Rules)
e) IS-8828:1996 : Circuit breaker for household and similar installations.
f) IS-13947 (Part-I):1993 : Low Voltage switchgear & control gear : Part-I (General Rules)
g) ISA-18.1:1979 : Annunciator Sequences and Specification
h) NFPA-496:2003 : Purged & Pressurised Enclosure for Electrical Equipment in Hazardous Locations.

3.0 TECHNICAL REQUIREMENTS

3.1 Panel Construction

3.1.1 The local panels shall house the secondary instruments, annunciation system, Single loop controller, Control switches / push buttons, indicating lamps/LED cluster, relays, timers and other devices required for operation and monitoring of the equipment locally.

3.1.2 The panels shall be of free standing type either welded construction on angle iron (minimum section of 50 x 50 x 4 mm) structure or folded construction by sheet metal formation depending upon the equipments to be mounted on it. The panels shall be robustly built and stiffeners as necessary shall be provided.

3.1.3 The panel shall be suitably reinforced to ensure adequate support for all instruments mounted thereon. All welds on exposed panel surfaces shall be ground smooth.

3.1.4 The salient features of construction shall be:

Sheet material: Cold rolled sheet steel
Frame thickness: Not less than 3.0mm
Enclosure thickness: Not less than 2.5 mm for load bearing sections (Mounted with instruments)
1.6 mm for doors and Not less than 2.0 mm for others

Gland plate thickness: 3.0mm
Base channel: ISMC 100 with anti-vibration mounting & foundation bolts.

3.1.5 The panel shall be provided with rear doors with integral lockable handle. The door when locked shall be held at minimum three places. The door width shall not be more than 550mm.The doors shall be provided with suitable stiffeners to prevent buckling. The handle shall be on the right side of the door. The door shall be removable type with concealed hinges to facilitate maintenance work. Suitable pocket inside the door shall be provided for keeping the drawings / documents. Double door shall be provided with suitable glass windows, as per the requirement.

3.1.6 Suitable neoprene gasket shall be provided on all doors and removable covers. Suitable ventilation system along with louvers shall be provided at bottom and top of the doors covered with removable wire mesh.

Estelar

3.1.7 The class of protection shall be in accordance with IP-42 unless otherwise specified

3.1.8 All steel surfaces shall be cleaned by sand / pellet blasting, treated for pickling, degreasing and phosphating etc. by seven tank method. The panel shall have a high quality finish and appearance. The panel shall be painted with two coats of primer followed by two coats of epoxy / synthetic enamel based final paint of color shade and finish Minimum thickness of the paint shall be 85 microns for external paint and 70 microns for internal paint.

3.1.9 The cable glands of the required size and type shall be supplied alongwith the Panel.

3.1.10 All operable and indicating devices shall be mounted on the front of the panel while aux. Relays / timers MCBs etc. required for realization of control logics shall be mounted on a mounting plate inside the panel. Auxiliary relays and timers etc. shall be grouped according to the control function.
No operable or indicating devices shall be mounted below 750 mm and above 1800 mm (w.r.t. finished ground level). The devices shall be located in such a way so as to ensure easy access for operation / maintenance.

3.1.11 Single / dual control power supply feeders of voltage class shall be provided by the purchaser. In case redundant power supply feeders are provided then auto changeover unit shall be mounted on the panel are in the panel supplier's scope. Where DC control power supply is specified an additional 240V, 50 Hz AC supply feeder for powering of space heater and lighting shall be provided by the purchaser. Suitable arrangement shall be provided inside the panel to receive and terminate the power supply feeder(s). For this purpose MCBs of suitable current rating shall be provided by the vendor. A supervisory relay along with a pilot lamp to indicate control supply 'ON' shall be provided on the panel. Any other power supply required for the operation of the devices mounted in the panel shall be arranged by the vendor.

3.1.12 The internal wiring shall be carried out with 1100 volt grade PVC insulated copper multi strand wire / flexible of 1.5mm2 size. AC & DC wires shall be kept separate from each other. Separate coloured wires to be used for AC and DC circuits. All wires shall be properly numbered and identified with ferrules as per the Control scheme / wiring diagram. Wires shall be routed and run through PVC troughs.

3.1.13 Terminal blocks shall be clip on type, 1100 volts grade. Separate terminal blocks shall be used for AC & DC circuits. The terminals shall be suitable for terminating 0.5 mm2 to 2.5mm2 external cables. The TB points in terminal block shall be cage clamp type / screw type. The terminal for ammeters shall be provided with removable links for shorting CTs. Each terminal strip shall be provided with identification strip. The terminal shall not be mounted below 250 mm height from finished floor. The panel shall have ten (20) percent spare terminal.

3.1.14 The interior of each panel shall be suitably illuminated through fluorescent lamps / tube lights with shrouded cover of minimum 15W operable on 240V 50 Hz AC power supply through panel door switch. A 15 Amp. 3-pin Power receptacle shall be provided.

3.1.15 Suitable space heaters operable on 240 Volts 50 Hz AC power system shall be provided at the panel bottom. These shall be designed to maintain the panel temperature five (5) deg. C above the ambient temperature during maintenance shutdown. Suitable isolating and control devices comprising of MCB, thermostat etc. shall be provided for the space heater.

3.1.16 The panel shall be provided with a copper earth bus of 25 x 6 mm size running throughout the width of the panel. It shall be terminated internally with 10 mm bolts at extreme ends for connection to; main station earth. The panel mounted equipments / devices shall be connected to earth bus through green coloured PVC insulated stranded copper conductor of 2.5 mm2 size.

3.1.17 Local Panel shall be provided with main name plate of 150 mm x 40 mm size having inscription of 20 mm height. The individual devices on the panels shall be as provided with separate name plate with inscription of 3 mm height. The instrument / devices shall be provided with stick on label plates inside the panel. The material of the main and individual labels shall be three (3) ply 3 mm thick Traffolyte

Estelar

Sheet / 2 mm Anodised Aluminium Plate. The inscription shall be with white letters on black background on traffolyte sheet. The labels shall be fixed by self tapping non-rusting screws.

3.1.18 Vendor shall furnish electric load and heat load list (in case panel is to be placed in ac environment) of each panel.

3.2 Hazardous Area Panel Requirement

3.2.1 The Local Panel located in hazardous area shall be pressurized as per NFPA-496 requirements to render it non-hazardous. Alarms shall be provided for local and remote annunciation when pressurisation falls below 2.5 mm of water column. Protection shall be of type Z of NFPA-496. It shall not be possible to switch ON the power of purged section unless it is purged as per the recommendation of NFPA-496. Vendor must provide a protective device on the panel to protect the panel from over pressurisation.

3.2.2 Vendor shall supply pressurisation kit consisting of valves, restriction orifices, dual filter regulation, pressure gauges, pressure switches, rotameter etc. Pressurisation kit shall be surface mounting on a metal board and located outside the local panel. Pressurisation kit shall further consist of solenoid valve flow switch, timer blow off safety device etc., so as to make purging fully automatic. However final start shall be manual. Panel protection against over pressure to be provided as per NFPA-496.

3.2.3 Pressurised local control panel pressurization kit assembly design shall provide minimum leakage flow through the Local Control Panel. Panel venting shall be as per NFPA-496.

3.2.4 All components in the local panel like indicating instruments, push buttons switches, lamps etc., which are required to be energized without panel pressurization or before completion of purge cycle shall be explosion proof as per NEMA-7 & suitable for area classification.

3.2.5 All push buttons etc. requiring frequent operation during machine running shall have good positive sealing. Weatherproof housing or cover to be provided wherever necessary. Vendor shall provide pressurisation bypass switch outside explosion proof enclosure of pressurized panel with lamp indication. This shall be used only during maintenance. All hinges, screws, other non-painted metallic parts shall be of stainless steel material.

3.2.6 Provision to switch off manually all types of power shall be provided in the panel. In addition, it shall also be possible to switch off power circuits / components which are powered from motor control centre or control room manually in case of pressurization failure. All such cables from MCC and main control room shall be terminated in explosion proof boxes (NEMA-7).

3.3 Control & Monitoring devices

3.3.1 Instruments like Indicators, recorders, single loop controllers etc. as applicable and specified elsewhere for the plant / equipment shall be supplied and mounted on the panel.

3.3.2 Alarm Annunciator System

It shall be solid state discrete facia type having a sequence of ISA-S18.1A or as specified, opaque facia windows of 70 mm x 50 mm size, having two (2) lamps per window, and hooter of 10W, and provision for repeat group alarm at remote. The annunciator shall be provided with ten (10) percent spare windows or minimum two (2) windows along with electronics.

3.3.3 Relays

The relays shall be electromagnetic type suitable for specified control supply. Its contact configuration and rating shall be suitable for the specified control function. However minimum contact rating shall be 5 Amp AC & 2 Amp DC as applicable. There shall be ten (10) percent spare contacts.

3.3.4 Timers

The timers shall be electronic type suitable for specified control supply. Its contact configuration and rating shall be suitable for the specified control function. However, minimum contact rating shall be 5 Amp AC & 2 Amp DC as applicable.

Estelar

3.3.5 Control / Selector Switches

Switches shall be Rotary Cam type with minimum of 5 Amps AC & 2 Amp DC continuous current rating. Selector switches shall be stay put type while control switches shall be spring-return-to-neutral type. Contact configuration and rating shall be as per the control function requirement. The switches shall be lockable type wherever specified. Each switch shall be provided with engraved plates indicating the switch position / functions.

3.3.6 Push Buttons / Indicating Lights

The push buttons shall be momentary action self-resetting type, however stop P.B. for unidirectional drives shall be provided with manual reset facility. Its contact configuration & rating shall be as required for the control function but minimum 2 NO + 2 NC of 5 Amp. AC rating. It shall have round coloured projecting tab and engraved escutcheon plate / inscription plate. Colour coding of push buttons shall be as under:

RED	Motor OFF / Valve CLOSE	YELLOW	Alarm acknowledge	Left Hand Side
GREEN	Motor ON / Valve OPEN	BLACK	Lamp test	Right Hand Side

Indicating lights shall be suitable for direct connections across specified power supplies. It shall be fitted with built in resistance to prevent circuit tripping on shorting of lamp filament. It shall be fitted with LED cluster type lamp replaceable from front.

GREEN	Motor OFF / Valve CLOSED condition	AMBER	Motor tripped	Left Hand Side
RED	Motor ON / Valve OPEN condition	WHITE	Normal / healthy	Right Hand Side

3.3.7 Ammeters

Ammeter shall be 96 x 96 mm size, 90 deg. deflection, 1.5% accuracy, 1 Amp. CT operated or with 4-20mA input and Flush mounting type

Ammeters for motors shall have six (6) times folded scale at upper end to enable motor starting current indication

3.3.8 Miniature Circuit Breaker (MCB)

These shall be instantaneous magnetic trip type for short circuit in addition to current time inverse delayed thermal trip feature for over current protection. The housing of MCB shall be made of non-ignitable, high impact material. It shall have minimum short circuit rating of 9 KA for AC Voltages and 4 KA for DC Voltages.

3.3.9 Makes of various instruments / devices shall be as given below

1.	Alarm Annunciators	:	Procon / IIC
2.	Ammeters	:	AEP / IMP
3.	Control / Selector Switches	:	Alsthom / Kaycee / Siemens / L&T
4.	Push Buttons / Indicating Lamps	:	Siemens / L&T / Teknic / Alsthom
5.	Auxiliary Relays	:	Jyoti / Siemens / L&T / OEN
6.	Timers	:	L&T / Alsthom / Bhartiya Cutler Hammer
7.	MCBs	:	S&S Power Engg. / Indo Asian / MDS
8.	Terminal Blocks	:	Jyoti / Elmex

4.0 TESTING AND INSPECTION

4.1 The bidder shall adopt suitable quality assurance program to ensure that the equipments offered will meet the specification requirements in full.

4.2 BHEL's standard Quality Plan for LCP is enclosed with the specification. The bidder shall furnish his acceptance to BHEL's QP and submit the signed and stamped copy of QP along with the offer.

Estelar

4.3 The vendor shall conduct the following tests as a minimum requirement:

4.3.1 Routine Tests

1. High Voltage (H.V.)
2. Insulation Resistance (I.R.)
3. Functional

4.3.2 Type Tests

1. Enclosure Class Test

Estelar

5.0 SPARES AND CONSUMABLES

5.1 Commissioning Spares and consumables

The bidder shall supply all commissioning spares and consumables 'as required' during Start-up, as part of the main equipment supply.

5.2. Mandatory Spares

The bidder shall offer alongwith main offer, the Mandatory Spares as specified elsewhere in the specification. The Mandatory Spares offered shall be of the same make and type as the main equipment.

5.3. Recommended Spares

The bidder shall furnish a list of Recommended Spares indicating the normal service expectancy period and frequency of replacement; quantities recommended for 3 years operation alongwith unit rate against each item to enable BHEL/BHEL's Customer to place a separate order later, if required.

6.0 DRAWINGS AND DOCUMENTS

6.1 The bidder shall furnish the following documents in required number of copies along with the bid :

1. Data Sheet
2. General Arrangement Drawing.
3. Catalogue and technical information for instruments and devices.
4. Quality Plan.

6.2 The vendor shall furnish the following documents in required number as agreed after the award of contract:

1. Data Shee
2. GA Drawing indicating layout of instruments, construction details, foundation details, cable gland plate alongwith cable glands and all details mentioned in this specification.
3. Control Schematic Diagram along with grouping of different terminals for various functions.
4. Catalogue and technical information for instruments and devices with selected options clearly marked.
5. O&M Manuals.
6. "As Built" Drawing.
7. CDs.

7.0 MARKING AND PACKING

7.1 Panel with all instruments / devices mounted on it shall be suitably packed & protected for the entire period of despatch, storage and erection against impact, abrasion, corrossion, incidental damage due to vermin, sunlight, high temperature, rain moisture, humidity, dust, sea-water spray (where applicable) as well as rough handling and delays in Transit and storage in open.

Estelar

`

SIGNAL EXCHANGE BETWEEN DRIVES & DCS

Estelar

ANNEXURE-1

STANDARD HARDWIRED INTERFACE BETWEEN COMPRESSOR CONTROL SYSTEM, DCS AND MCC

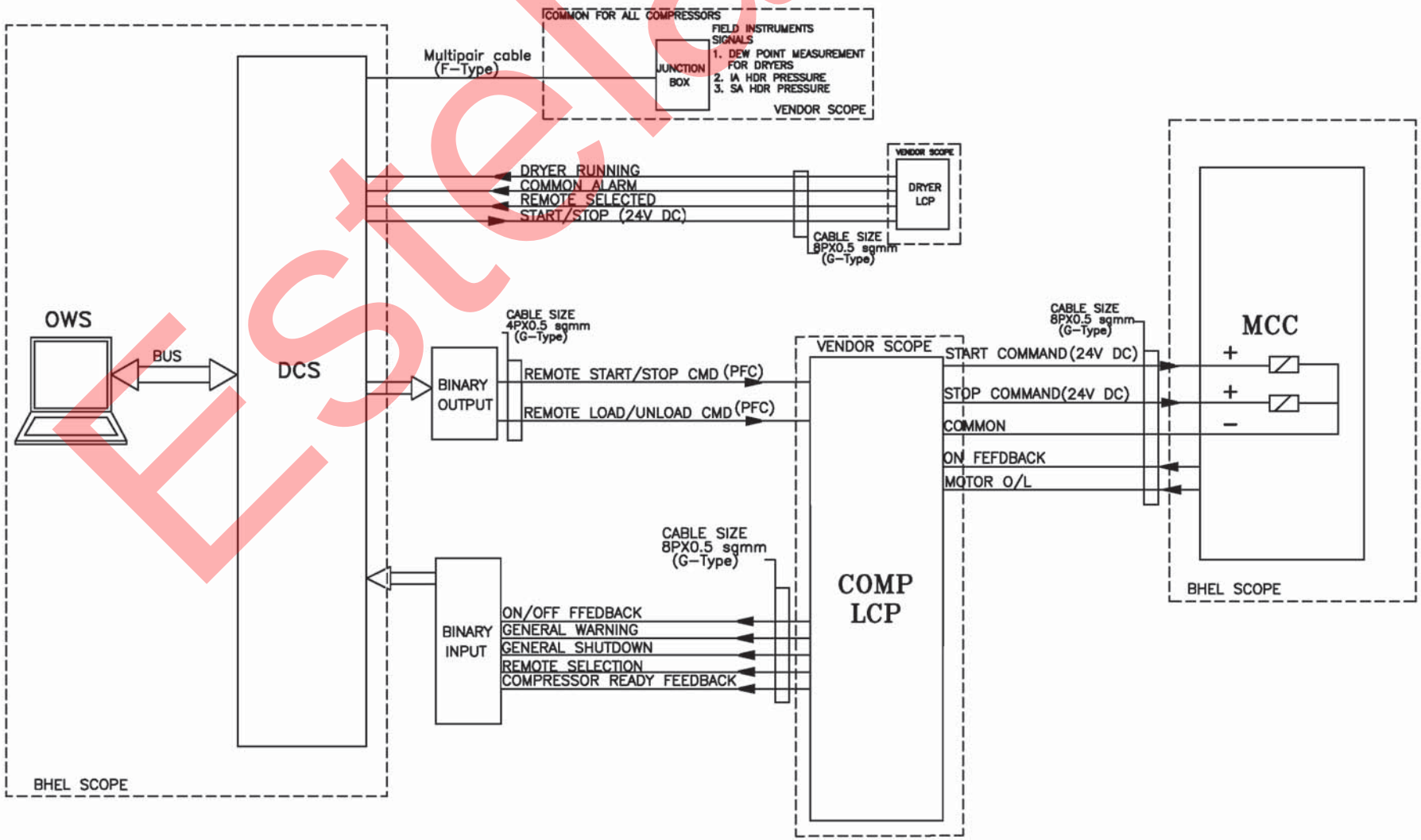

NOTE:

1. CABLE SCOPE SHALL BE AS PER ELECTRICAL SCOPE MATRIX.

भेल BHEL	PROJECT:STANDARD HARDWIRE INTERFACE	DRG.NO.	
		DATE	23.02.2018
	TITLE DDCMIS/LCP/MCC INTERFACE FOR INDIVIDUAL COMPRESSOR/DRYER	REV.NO.	00
		SHT	

Estelar

Format for Soft signal exchange between DCS and PLC/Microprocessor based system

Serial No	Tag name	Tag Description	Modbus address	Point Type	ENGG. UNIT	Range	Function Code	
								Note: 1.Tag Name and Descriptions
								are of that of Slave devices
								2. Modbus Address is register address in Slave Device
								3. Engg unit is unit of measurement
								Ex Pressure - bar, Temp Deg C etc
								4. Point type is Analog or packed binary
								5. Range applicable for analog value and is instrument range
								6- Function code is Modbus function code used to update data from slave to master
								Ex Function Code for Read Input Register etc
								7. Kindly Indicate Start and end register address for each function type
								and each block of data

Estelar

`

INSTRUMENT STUB DETAILS

Estelar

PRESS. MEASUREMENT

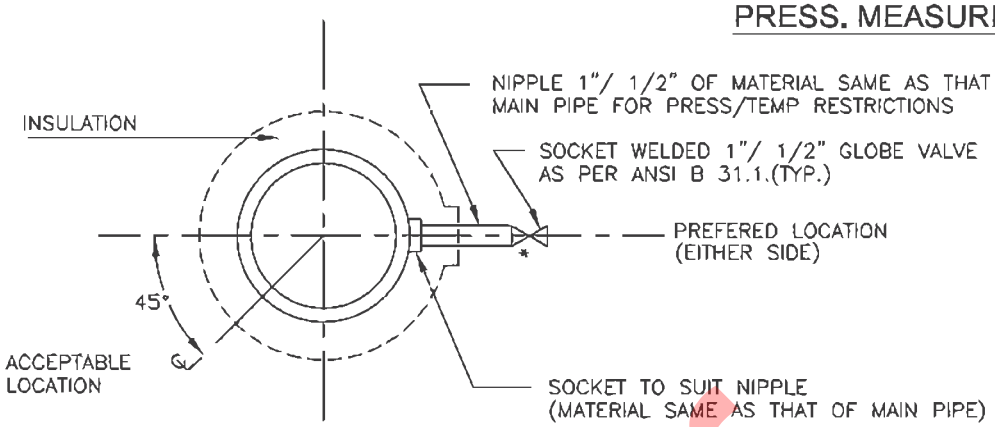

ELEVATION
LIQUID SERVICE

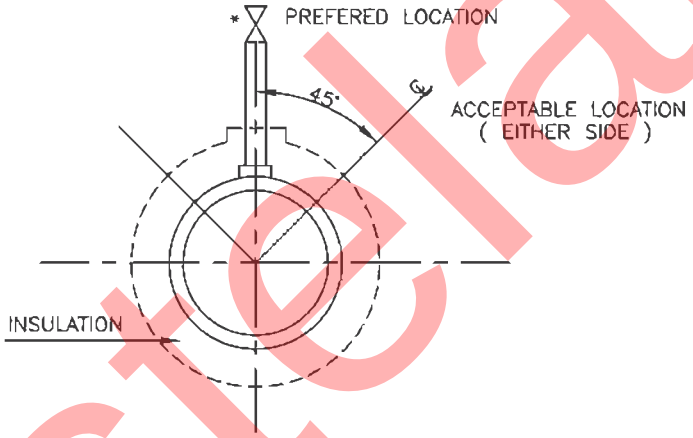

ELEVATION
STEAM SERVICE

PRESSURE CONNECTION ON HORIZONTAL PIPE

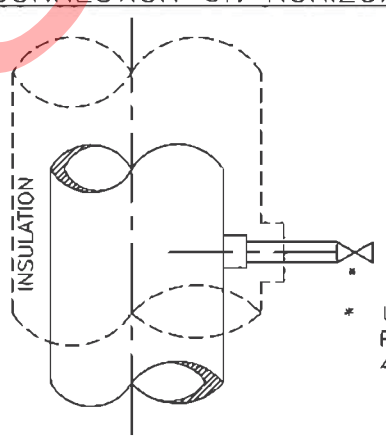

* USE DOUBLE ISOLATION VALVES FOR PRESSURE EQUAL TO OR EXCEEDING 40 Kg/Cm2.

ELEVATION
LIQUID OR STEAM SERVICE

PRESSURE CONNECTIONS ON VERTICAL PIPES

FOR TENDER PURPOSE ONLY

NTPC — N T P C LIMITED
(A GOVERNMENT OF INDIA ENTERPRISE)
ENGINEERING DIVISION

REV. NO.	DESCRIPTION	DRAWN	DESIGN	CHKD.	M	E	C	CLI	ARCH.	APP'D.	DATE
A	FIRST ISSUE							T.C.			

CLEARED

PROJECT	TYPICALTHERMAL POWER PROJECT
TITLE	INSTRUMENT SOURCE CONNECTION DETAILS

SIZE	SCALE	DRG. NO.	REV. NO.
A4	N.T.S.	0000-999-POI-A-035 Sh-1 Of 14	A

This document is the property of NATIONAL THERMAL POWER CORPORATION LTD.
No part of this document will be reproduced by any means without the written permission.

Estelar

PRESSURE MEASUREMENT

(SYSTEM PR.>40Kg/Sq Cm CL 9000)

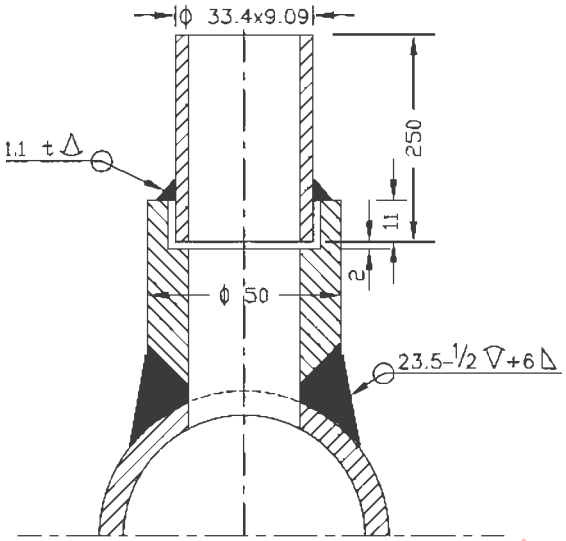

(SYSTEM PR.>40Kg/Sq Cm CL 6000)

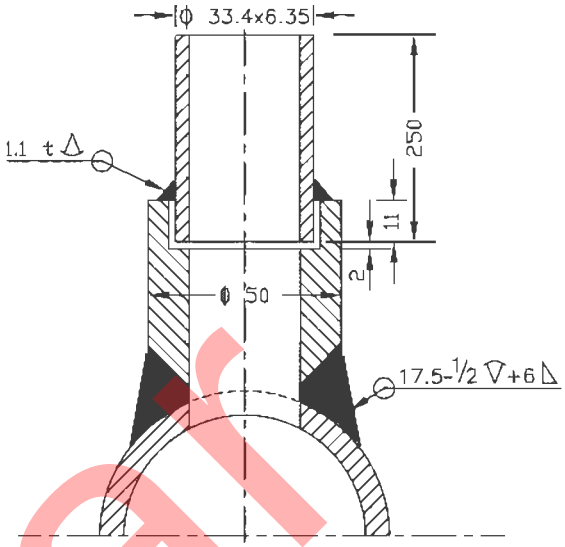

(SYSTEM PR. <40Kg/Sq cm Nb 25 CL 3000)

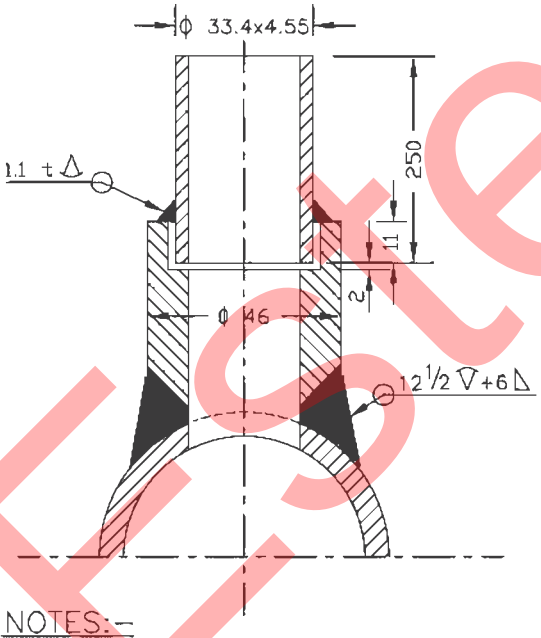

(SYSTEM PR. <40Kg/Sq cm Nb 15 CL 3000)

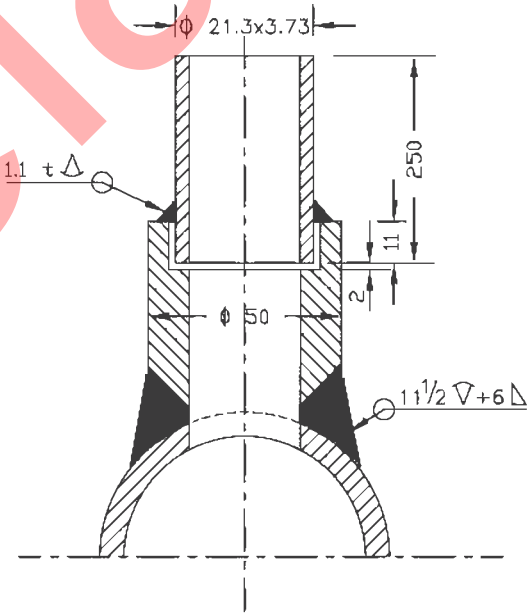

NOTES:–

1. MATERIAL OF THE BOSS AND NIPPLE SHALL BE THE SAME AS THE PIPE INTO WHICH IT IS WELDED AND CONFIRM TO ANSI B 16.11.
2. THE LENGTH OF THE NIPPLE SHOULD BE 250mm.
3. THE OTHER END OF THE NIPPLE SHALL BE SOCKET WELDED WITH 1" GLOBE VALVE OF MATERIAL AS PER ANSI B 16.1.
4. TWO ISOLATED VALVES ARE TO BE USED FOR PRESSURE = >40 Kg/Cm2.
5. EDGE HOLE MUST BE CLEAN AND SQUARE OR ROUNDED SLIGHTLY (1/64" RADIUS) FREE FROM BURRS, WIRE EDGES OR OTHER IRREGULARITIES.
6. ORIENTATION OF TAP WILL BE VARY WITH TYPE OF PROCESS FLUID AND NATURE OF RUN OF THE PIPE.
7. ACTIVITIES TO BE COMPLETED AT THE SHOP, WELD THE COUPLING (OR BOSS) ON THE PIPE AND DRILL PRESSURE CONNECTION HOLE (SAME AS I D OF NIPPLE) IN THE PIPE IN ALLIGNMENT WITH HOLE IN THE COUPLING.
8. ALL DIMENSIONS ARE IN mm UNLESS OTHERWISE STATED.

FOR TENDER PURPOSE ONLY

NTPC — N T P C LIMITED (A GOVERNMENT OF INDIA ENTERPRISE) ENGINEERING DIVISION

PROJECT: TYPICALTHERMAL POWER PROJECT

TITLE: INSTRUMENT SOURCE CONNECTION DETAILS

REV. NO.	DESCRIPTION	DRAWN	DESIGN	CHKD.	M	E	C	C&I	ARCH.	APP'D.	DATE
A	FIRST ISSUE							T.G.			

CLEARED

SIZE	SCALE	DRG. NO.	REV NO.
A4	N.T.S.	0000-999-POI-A-035 Sh-2 Of 14	A

This document is the property of NATIONAL THERMAL POWER CORPORATION LTD.
No part of this document will be reproduced by any means without the written permission.

Estelar

TEMP. MEASUREMENT

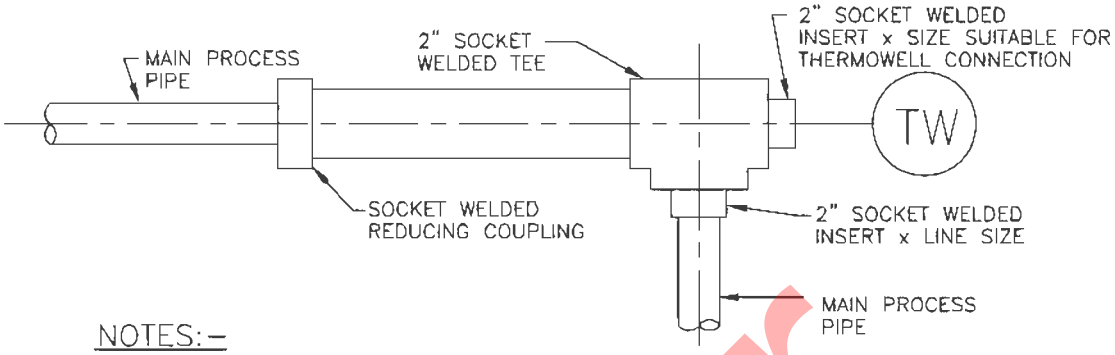

NOTES:–

1. THIS TYPE OF THERMOWELL INSTALLATION IS SUITABLE FOR THE PROCESS PIPE OF 2" NPS AND SMALLER.
2. FOR STEAM SERVICE THIS TYPE OF THERMOWELL INSTALLATION 90° BEND MAY BE USED ONLY IN VERTICAL PLANE.
3. THE LENGTH OF THE LARGER PIPE SECTION SHALL BE MINIMUM 150mm (IT MUST BE GREATER THAN THERMOWELL LENGTH).

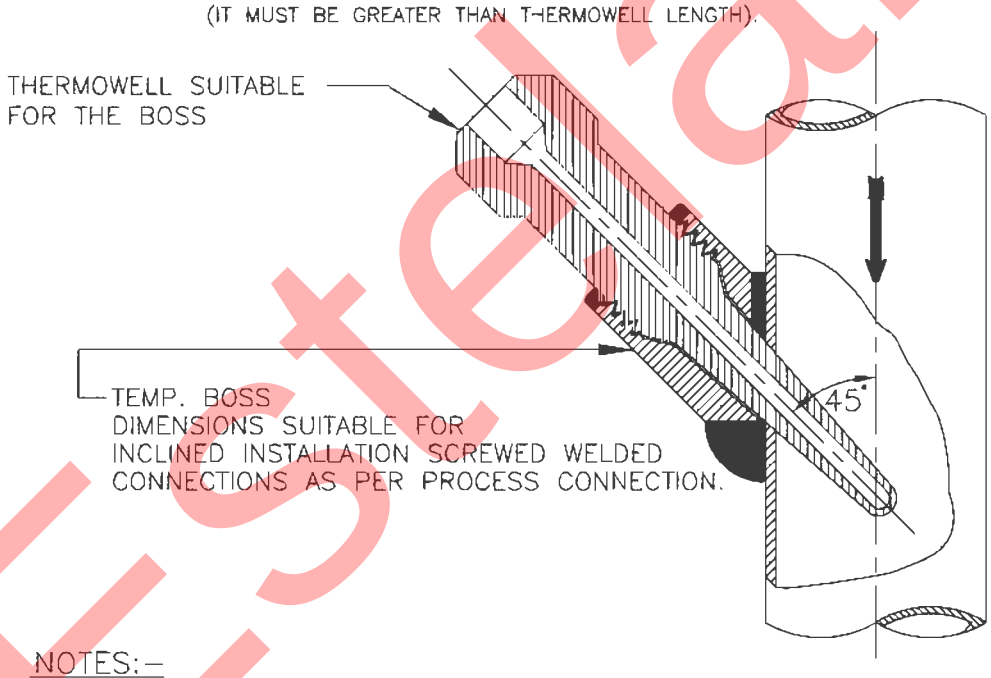

NOTES:–

1. INCLINED INSTALLATION OF THERMOWELL SHALL BE APPLICABLE FOR 4" AND SMALLER LINE SIZE BUT LIMITED TO MIN. 3" LINE SIZE.
2. FOR 2" AND SMALLER LINE SIZE NECESSARY EXPANDER OF MIN. 3" SIZE OF MAIN PIPING SPECIFICATION SHALL BE USED.
3. THIS TYPE OF INSTALLATION IS APPLICABLE FOR HORIZONTAL AND VERTICAL PIPE SECTION.
4. FOR STEAM SERVICES EXPANDER SECTION MAY BE USED ONLY IN VERTICAL RUN.
5. THE EXPANDER SECTION SHALL BE OF ADEQUATE LENGTH (ATLEAST 3–4 TIMES DIA OF THE MAIN PROCESS PIPE AT BOTH SIDE OF THE INSTALLED THERMOWELL).

FOR TENDER PURPOSE ONLY

NTPC — N T P C LIMITED (A GOVERNMENT OF INDIA ENTERPRISE) ENGINEERING DIVISION

REV. NO.	DESCRIPTION	DRAWN	DESIGN	CHKD.	M	E	C	C&I	ARCH.	APP'D.	DATE
A	FIRST ISSUE							T.G.			01.08.15

CLEARED

PROJECT	TYPICALTHERMAL POWER PROJECT (SG PACKAGE)
TITLE	INSTRUMENT SOURCE CONNECTION DETAILS
SIZE	A4
SCALE	N.T.S.
DRG. NO.	0000-999/102-POI-A-035 Sh-4 Of 14
REV NO.	A

This document is the property of NATIONAL THERMAL POWER CORPORATION LTD.
No part of this document will be reproduced by any means without the written permission.

Estelar

This document is the property of NATIONAL THERMAL POWER CORPORATION LTD.
No part of this document will be reproduced by any means without the written permission.

TEMP. MEASUREMENT

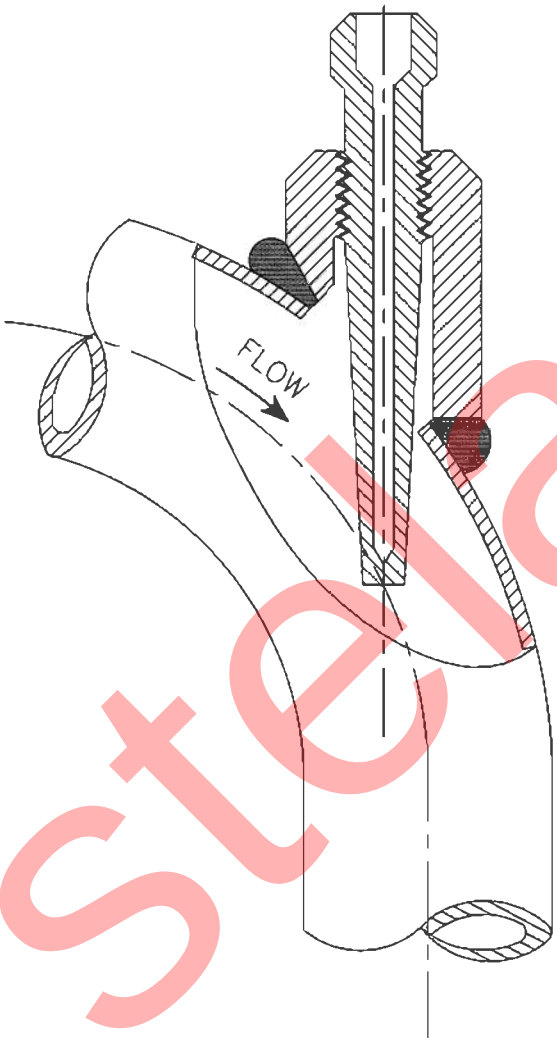

Estelar

NOTES:–

1. FLOW INSTALLATION OF THERMOWELL SHALL BE APPLICABLE FOR 4" AND SMALLER LINE SIZE BUT LIMITED TO MINIMUM 3" LINE SIZE.

2. FOR 2" AND SMALLER LINE SIZE NECESSARY EXPANDER OF ELBOW FORM (AS SHOWN) OF MINIMUM 3" SIZE SHALL BE USED.

3. ELBOW EXPANDER SECTION IN HORIZONTAL PLANE MAY BE USED FOR LIQUID SERVICES. ONLY STEAM SERVICES EXPANDER SECTION MAY BE USED IN VERTICAL PLAN.

FOR TENDER PURPOSE ONLY

NTPC — N T P C LIMITED (A GOVERNMENT OF INDIA ENTERPRISE) ENGINEERING DIVISION

REV. NO.	DESCRIPTION	DRAWN	DESIGN	CHKD.	M	E	C	T.C. CLD	ARCH.	APP'D.	DATE
A	FIRST ISSUE										

CLEARED

PROJECT: TYPICALTHERMAL POWER PROJECT

TITLE: INSTRUMENT SOURCE CONNECTION DETAILS

SIZE	SCALE	DRG. NO.	REV. NO.
A4	N.T.S.	0000-999-POI-A-035 Sh-5 Of 14	A

TEMP. MEASUREMENT

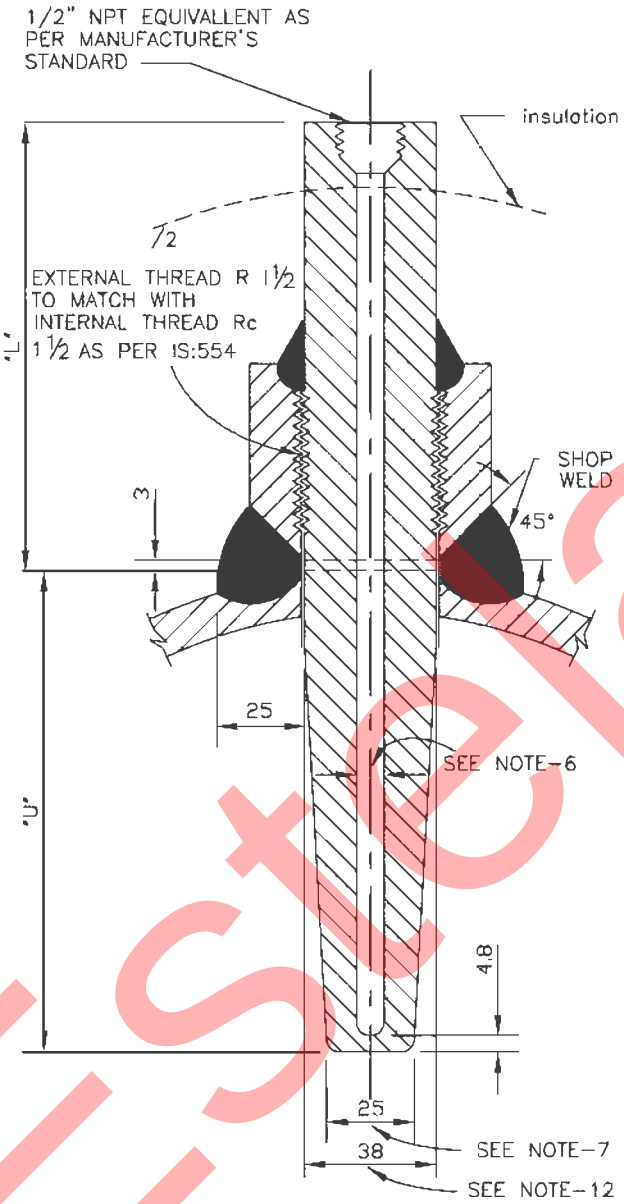

NOTES:-

1. THIS TYPE OF TEMPERATURE BOSS SHALL BE USED FOR THE PROCESS PRESS EQUAL/ABOVE 40 Kg/Cm2(g).
2. THE MATERIAL OF THE BOSS SHOULD BE SIMILAR TO THAT OF PIPING MATERIAL OF SPECIFICATION.
3. ALL WELD TO BE TESTED IN ACCORDANCE WITH APPLICABLE CODES BY MANUFACTURER.
4. MATERIAL OF THE THERMOWELL SHALL BE OF 316SS.
5. THERMOWELL SHALL BE DRILLED BARSTOCK TYPE.
6. INTERNAL BORE OF THE THERMOWELL SHOULD BE SELECTED BASED ON THE NORMAL SIZE OF THE SENSING ELEMENT AS PER ASME,PTC-19.3.
7. THE BOTTOM DIAMETER OF THE THERMOWELL TYPICALLY SHOWN HERE SHALL BE SUBJECT TO VARIATION BASED ON THE INTERNAL BORE OF THERMOWELL AND THICKNESS OF THERMOWELL MATERIAL TO WITHSTAND THE PROCESS PRESS.AND TEMP.,AS PER ASME,PTC-19.3
8. THE TYPE OF TAPERED THERMOWELL SHALL BE USED FOR LIQUID VELO-CITIES UP TO 92M.P.S.(300F.T.P.S.).
9. THERMOWELL WITH THE INSULATION LAG EXTENSIONS SHALL BE USED WHEREVER APPLICABLE.
10. ACTIVITIES TO BE COMPLETED AT THE SHOP. WELD THE BOSS ON THE PIPE AND DRILL THE HOLE IN THE PIPE IN ALLIGNMENT WITH HOLE IN THE BOSS. PROVIDE INTERNAL THREAD AS PER IS:554 TO MATCH WITH THE THERMO-WELL EXTERNAL THREAD.
11. ALL DIMENSIONS ARE IN MM UNLESS OTHERWISE STATED.
12. WIILL BE SUITABLE TO MATCH THE STUB DIMENSIONS AS PER RC 1½
13. THE "U" & "L" DIMENSIONS SHALL BE BE SELECTED BASED ON PARTICULAR APPLICATION AND THE SAME SHALL BE SUBJECT TO OWNER'S APPROVAL DURING DETAILED ENGINEERING.
14. ALL DIMENSIONS ARE INDICATIVE ONLY.

FOR TENDER PURPOSE ONLY

NTPC — **N T P C LIMITED** (A GOVERNMENT OF INDIA ENTERPRISE) ENGINEERING DIVISION

PROJECT: TYPICALTHERMAL POWER PROJECT

TITLE: INSTRUMENT SOURCE CONNECTION DETAILS

REV. NO.	DESCRIPTION	DRAWN	DESIGN	CHKD.	M	E	C	C&I	ARCH.	APP.D.	DATE
A	FIRST ISSUE							T.G.			21.06.13

CLEARED

SIZE	SCALE	DRG. NO.	REV NO.
A4	N.T.S.	0000-999-POI-A-035 Sh-6 Of 14	A

This document is the property of NATIONAL THERMAL POWER CORPORATION LTD.
No part of this document will be reproduced by any means without the written permission.

Estelar

TEMP. MEASUREMENT

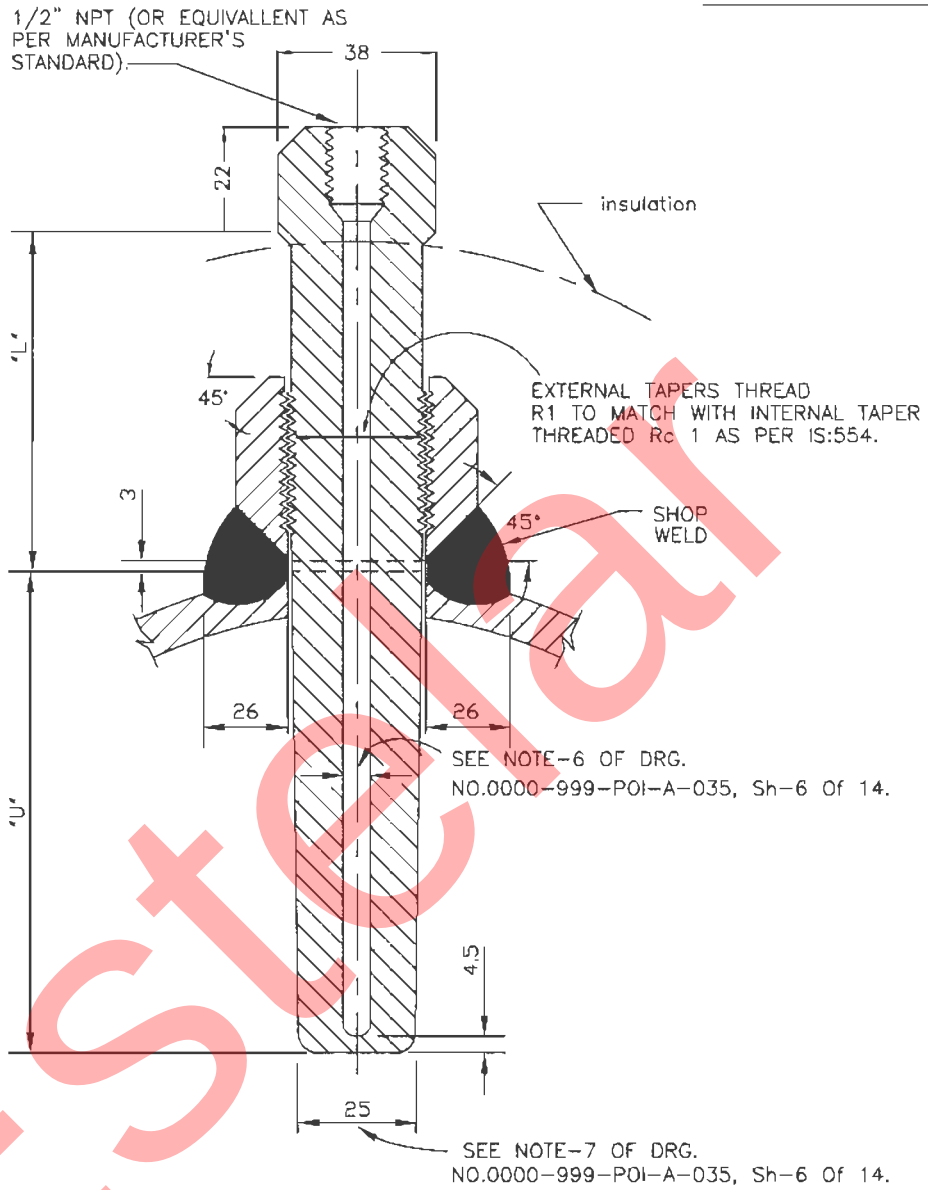

NOTES:-

1. THIS TYPE OF TEMPERATURE BOSS IS APPLICABLE FOR THE PROCESS PRESSURE/TEMPERATURE BELOW 40 Kg/Cm2(g)/400°C
2. FOR PRESSURE TIGHT JOINTS THE BOSS SHOULD HAVE INTERNAL TAPERED PIPE THREAD Rc 1 AS PER IS:554. THE LENGTH OF THREAD ENGAGEMENT SHOULD BE AS PER ABOVE STANDARD.
3. PIPES HAVING PROBABILITY OF PROLONGED VIBRATION SEAL WELDING MAY BE DONE ALL AROUND AFTER TIGHTENING THERMOWELL WITHIN THE BOSS.
4. SEE NOTES-2 TO 14 OF DRG. NO. 0000-999-POI-A-035, Sh-6 Of 14.

FOR TENDER PURPOSE ONLY

NTPC — N T P C LIMITED (A GOVERNMENT OF INDIA ENTERPRISE) ENGINEERING DIVISION

REV. NO.	DESCRIPTION	DRAWN	DESIGN	CHKD.	M	E	C	C&I	ARCH.	APP'D.	DATE
A	FIRST ISSUE							T.G.			

CLEARED

PROJECT	TYPICALTHERMAL POWER PROJECT
TITLE	INSTRUMENT SOURCE CONNECTION DETAILS
SIZE	A4
SCALE	N.T.S.
DRG. NO.	0000-999-POI-A-035 Sh-7 Of 14
REV NO.	A

This document is the property of NATIONAL THERMAL POWER CORPORATION LTD.
No part of this document will be reproduced by any means without the written permission.

Estelar

FLOW MEASUREMENT

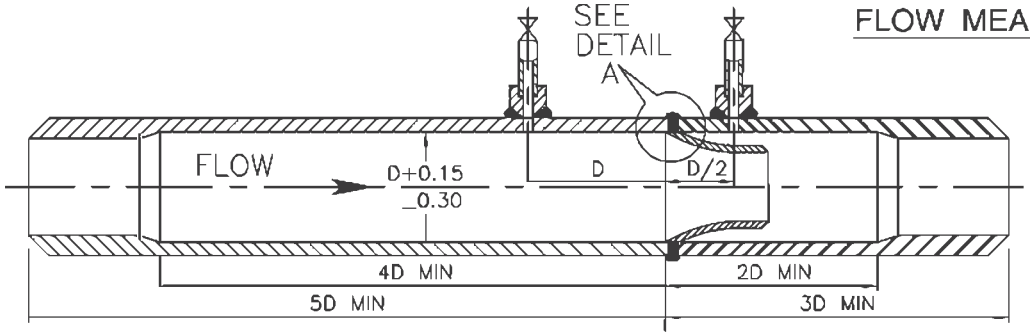

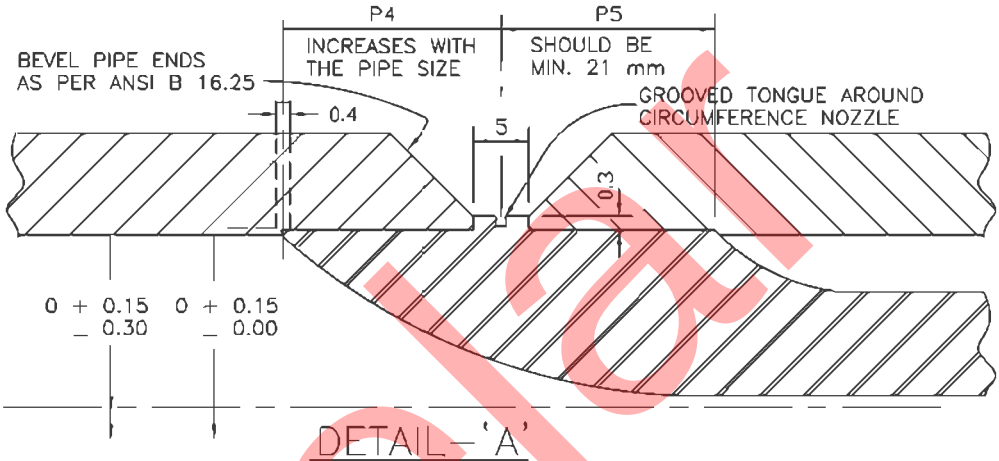

DETAIL – 'A'

NOTES:–

1. COMPLETE FLOW NOZZLE BRANCH ASSEMBLY ALONG WITH NIPPLES AND SOURCE ISOLATION VALVES SHALL BE SUPPLIED BY THE BIDDER. THE BIDDER ALSO TO INSTALL FLOW NOZZLE WITHIN THE MACHINED BRANCH, PRESSURE STUBS ON THE BRANCH PIPE (FOR ORIENTATION OF PRESSURE TAP REF. NOTE–3) ALONG WITH NIPPLE AND SOURCE ISOLATION VALVES.
2. THE MACHINING OF BRANCH PIPE SHOULD BE DONE AFTER PRESSURE CONNECTIONS HAVE BEEN WELDED TO PIPE AND ALSO EXTEND FOR ATLEAST 4D IN THE INLET SECTION, 2D IN THE OUTLET SECTION, MEASURED FROM THE INLET FACE OF FLOW NOZZLE. TOTAL BRANCH PIPE ASSEMBLY SHOULD BE ATLEAST A LENGTH OF 8D/5D IN THE INLET SECTION AND 3D IN THE OUTLET SECTION, MEASURED FROM THE INLET FACE OF THE FLOW NOZZLE AS SHOWN ABOVE.
3. ON HORIZONTAL PIPE RUN PRESSURE CONNECTIONS ARE TO BE LOCATED ON SIDES OF THE PIPE FOR LIQUID AND STEAM SERVICE AND ON THE TOP FOR DRY GAS SERVICE FOR PROCESS LIQUIDS, INSTALLATION OF PRESS. TAPS MAY BE ALLOWED WITHIN AN ANGLE OF 45° ELBOW HORIZONTAL FOR SPECIAL CASES BUT NO BOTTOM CONNECTIONS ARE ALLOWED.
4. THE LOCATION OF PRESSURE TAPS MUST BE WITHIN 1.5 mm(1/16") OF DISTANCE SPECIFIED AND NUMBER OF PAIRS OF PRESSURE TAPS TO BE PROVIDED WILL BE AS PER FLOW MEASUREMENT DATA SHEET.
5. PRESSURE TAPS SHOULD BE DRILLED RADIALLY WITH RESPECT TO PIPE AND THIS DRILLING SHOULD BE DONE AFTER ANY COUPLING FOR ATTACHING THE PRESSURE TUBING HAS BEEN WELDED TO THE PIPE. THE HOLE WHERE IT BREAKS THROUGH THE INNER SURFACE OF THE PIPE MUST BE FREE OF BURRS OR WIRE EDGE AND CORNER OF EDGE HOLE LEFT ROUNDED VERY SLIGHTLY (1/64" RADIOUS).
6. RECOMMENDED MAXIMUM DIAMETERS OF PRESSURE TAP HOLES IN THE BRANCH PIPES WILL BE AS PER EN ISO 5167:2003. THE DIAMETER FOR HOLE SHOULD REMAIN SAME FOR DISTANCE NOT LESS THAN 2.5 TIME OF DIA FROM THE INNER SURFACE OF THE PIPE.
7. FLOW NOZZLE SHALL BE CENTRED IN THE PIPE WITHIN 0.8 mm (1/32") OF THE PIPE AXIS. INSIDE DIAMETER MEASURED AT FOUR POINTS AT ANY CROSS SECTION SHALL NOT DIFFER BY MORE THAN 1%.
8. BRANCH PIPE SHALL BE AS PER MAIN PIPING MATERIAL SPECIFICATION. INTERNAL SURFACE OF BORED SECTIONS MUST BE SMOOTH AND STRAIGHT, FREE FROM SCALES, PITS, BURRS OR ANY IRREGULARTIES.
9. FLOW NOZZLE MATERIAL SHALL BE 316 SS AND THE DESIGN AS PER ASME.
10. MAXIMUM UPSTREAM AND DOWN STREAM STRAIGHT LENGTH REQUIRED FROM INLET FACE OF FLOW NOZZLE SHALL BE AS PER EN ISO 5167:2003.

FOR TENDER PURPOSE ONLY

NTPC — N T P C LIMITED (A GOVERNMENT OF INDIA ENTERPRISE) ENGINEERING DIVISION

PROJECT: TYPICALTHERMAL POWER PROJECT

TITLE: INSTRUMENT SOURCE CONNECTION DETAILS

REV. NO.	DESCRIPTION	DRAWN	DESIGN	CHKD.	M	E	C	CLM	ARCH.	APPD.	DATE
A	FIRST ISSUE							T.G.			21.04.15

CLEARED

SIZE	SCALE	DRG. NO.	REV. NO.
A4	N.T.S.	0000-999-POI-A-035 Sh-11 Of 14	A

This document is the property of NATIONAL THERMAL POWER CORPORATION LTD.
No part of this document will be reproduced by any means without the written permission.

Preliminary

FLOW MEASUREMENT

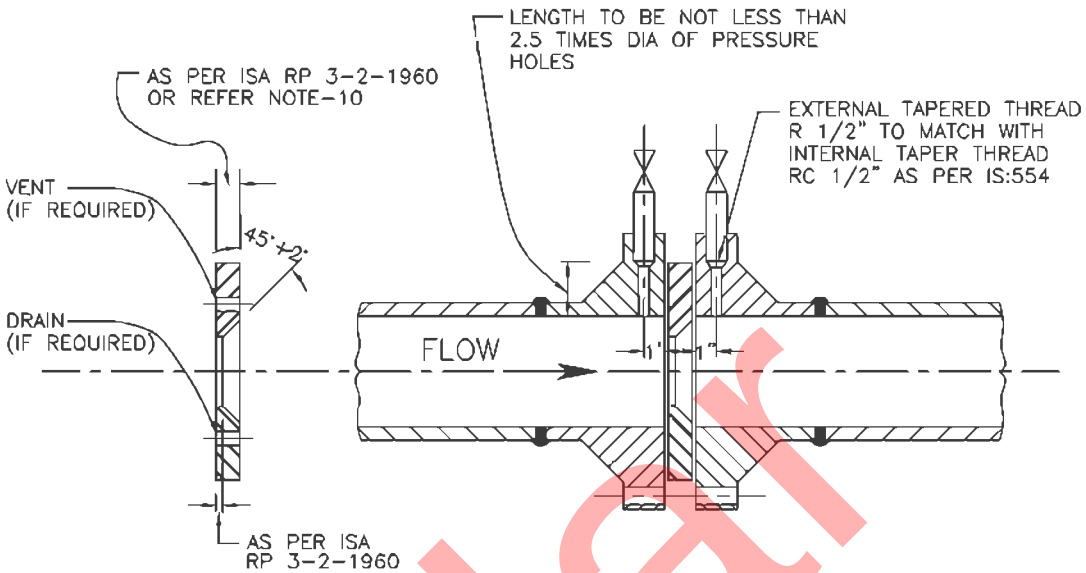

NOTES:-

1. ORIFICE PLATE MOUNTED BETWEEN FLANGES WITH FLANGE TAPPING (AS SHOWN ABOVE) SHOULD BE LIMITED TO PIPE SIZES OF 2" OR LARGER.
2. ORIFICE PLATE SHALL BE MOUNTED BETWEEN PIPING FLANGES WITH THE SHARP EDGE FACING UPSTREAM SUCH THAT CENTRE OF THE CONCENTRIC ORIFICE SHOULD BE WITHIN 0.79 mm (1/32") OF THE AXIS OF THE PIPE.
3. TWO GASKETS SHALL BE INSERTED BETWEEN THE PLATE AND THE FLANGES AND INSIDE DIAMETER OF THE GASKETS SHOULD BE ATLEAST 1.5 mm (1/16") GREATER THAN THE INSIDE DIAMETER OF THE PIPE SO THAT THEY DO NOT PROTRUDE INTO THE PIPE.
4. PIPING FLANGES SHALL BE ANSI WELD NECK, RAISED FACE TYPE. THE FLANGE IS TO BE ALIGNED WITH THE FACE PERPENDICULAR TO THE FLOW AXIS.
5. BIDDER TO SUPPLY ORIFICE PLATE SPECIAL TYPE (HAVING PRESS. CONNECTIONS) OF FLANGES ALONG WITH GASKETS, NIPPLES AND SOURCE VALVES.
6. ON HORIZONTAL PIPE RUN PRESSURE CONNECTIONS ARE TO BE TAKEN FROM SIDES FOR LIQUID AND STEAM SERVICE AND FROM TOP FOR DRY GAS SERVICE. FOR PROCESS LIQUIDS INSTALLATION OF PRESSURE TAPS MAY BE ALLOWED WITHIN AN ANGLE OF 45° ELBOW THE HORIZONTAL IN SPECIAL CASES BUT NO BOTTOM CONNECTIONS ARE ALLOWED.
7. THE LOCATION OF PRESSURE TAPS MUST BE WITHIN 1.5 mm (1/16") OF THE DISTANCE SPECIFIED.
8. MAXIMUM DIAMETER OF PRESS. CONNECTION HOLES SHALL BE AS PER RECOMMENDATIONS OF ASME PTC 19.5. THE DIAMETER OF THE HOLE SHOULD REMAIN THE SAME FOR A DISTANCE NOT LESS THAN 2.5 TIMES OF THE DIAMETER BEFORE EXPANDING INTO THE PRESSURE PIPE.
9. THERE MUST BE NO BURRS WIRE EDGES OR OTHER IRREGULARTIES ALONG THE EDGE OF THE HOLE AND IT MUST BE SQUARE AND ROUNDED SLIGHTLY (1/64" RADIUS).
10. ORIFICE PLATE SHOULD BE FLAT WITHIN 0.02 mm (0.001") AND THE SURFACE ROUGHNESS SHOULD NOT EXCEED 20 MICRO INCH. THE THICKNESS OF THE ORIFICE PLATE SHOULD BE AS PER EN ISO 5167:2003.
11. FOR HORIZONTAL PIPE RUN DRAIN HOLES IN ORIFICE PLATES ARE AT THE BOTTOM (APPROX. TANGENT TO INSIDE DIA OF PIPE) FOR STEAM OR GAS SERVICE. VENT HOLES SHOULD BE LOCATED ON UPPER SIDE FOR INCOMPRESSIBLE FLUID.
12. ORIFICE PLATE SHOULD BE OF 316 SS (ASTM A167-54 GRADE-II).
13. RECOMMENDED MINIMUM LENGTHS OF STRAIGHT PIPE PRECEDING AND FOLLOWING ORIFICES SHALL BE AS PER EN ISO 5167:2003.
14. THREE PAIRS OF PRESSURE TAPS SHALL BE PROVIDED WITH NIPPLES OF REQUIRED LENGTH AND SOURCE VALVES AND THE UN-USED TAPS ARE PLUGGED.
15. THE INTERNAL TAPERED CONNECTION WITHIN THE FLANGE FOR PRESSURE TAPS SHOULD BE RC 1/2" AND THE NIPPLE SHOULD ALSO OF EXTERNAL THREADED R 1/2" AS PER IS:554. THE LENGTH OF THREADED ENGAGEMENT SHALL BE AS PER ABOVE STANDARD.

FOR TENDER PURPOSE ONLY

NTPC — N T P C LIMITED (A GOVERNMENT OF INDIA ENTERPRISE) ENGINEERING DIVISION

PROJECT: TYPICALTHERMAL POWER PROJECT

TITLE: INSTRUMENT SOURCE CONNECTION DETAILS

REV. NO.	DESCRIPTION	DRAWN	DESIGN	CHKD.	M	E	C	C&I	ARCH.	APPD.	DATE
A	FIRST ISSUE							T.G.			

CLEARED

SIZE	SCALE	DRG. NO.	REV. NO.
A4	N.T.S.	0000-999-POI-A-035 Sh-12 Of 14	A

This document is the property of NATIONAL THERMAL POWER CORPORATION LTD.
No part of this document will be reproduced by any means without the written permission.

Eepolar

Estelar

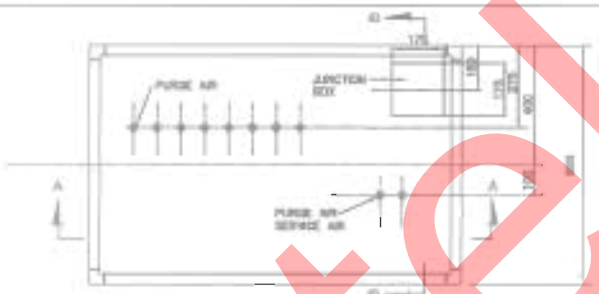

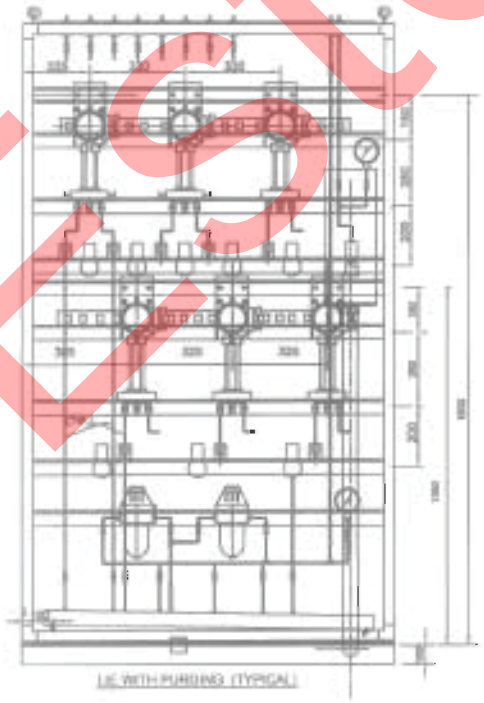

LIE WITH PURGING (TYPICAL)

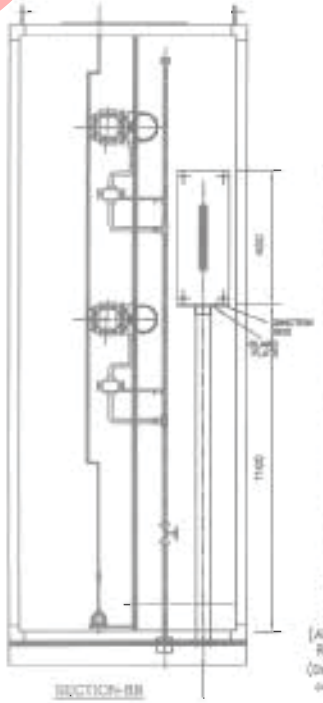

SECTION-BB

LIST OF MATERIALS

ITEM NO.	DESCRIPTION
1.	ISOLATION VALVE(gate/globe) SS.
2.	SEAMLESS SS PIPE.
3.	AIR FILTER REGULATOR.
4.	INST. AIR HEADER SS.
10.	COMP. NEEDLE VALVE SS.
11.	AIR PURGE SET.
12.	COMP VALVE SS.
13.	PLUG SS.
15.	TUBE SS CONNECTOR.
16.	TUBE COMP. EQUAL TEE UNION.
24.	BULKHEAD-SS SUITABLE FOR GI PIPE CONNECTION
25.	SEAMLESS TUBE SS.
27.	BRANCH TEE SS.
28.	PR. GAUGE.
30.	NYLON FLEX. HOSE BRAIDED WITH SS WIRE.
31.	HOSE BARBED CONN. SS.
33.	QUICK DISCONNECT SS (PURGE AIR CONNECTION TO INSTRUMENT SOURCE END).

LIST OF MATERIALS

ITEM NO.	DESCRIPTION
14.	SW GLOBE VALVE.
17.	SW EQUAL TEE
18.	S.S. NIPPLE
19.	5 VALVE MANIFOLD
20.	SW HALF COUPLET CS
21.	PIPE x TUBE UNION
22.	SUITABLE ADAPTER
23.	SS TUBE

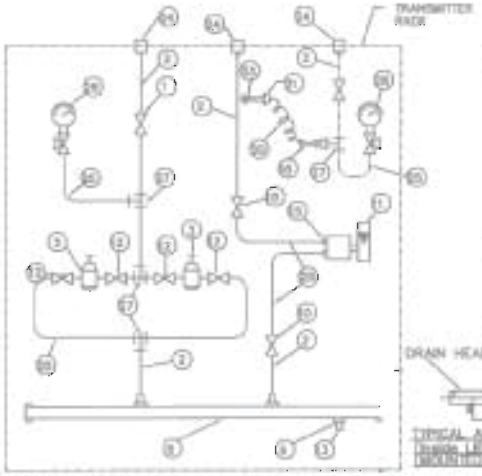

TYPICAL PURGE AIR CONNECTION INSIDE THE INST. ENCLOSURE

(APPLICABLE FOR MILL, AIR & FLUE GAS SERVICE INSTRUMENTS REQUIRING PURGE AIR)

(Drain Header of each LIE/LIT shall be connected to nearest plant drain)

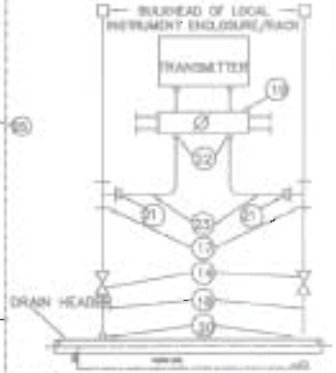

TYPICAL ARRANGEMENT OF DP TRANSMITTER (Inside LIE/LIT) (MOUNTED BELOW INSTRUMENT SOURCE POINT)

FOR TENDER PURPOSE ONLY

NTPC

N T P C LIMITED

PROJECT: TYPICAL THERMAL POWER PROJECT (TURNKEY EPC PACKAGE)

TITLE: TYPICAL GA OF LOCAL INSTRUMENT ENCLOSURE, PURGING SCHEME, DP TRANSMITTER

REV. NO.	DESCRIPTION	DRAWN	DESIGN	CHECK	B	E	C	SM	APPR.	APPD	DATE	SIZE	SCALE	DRG. NO.	REV. NO.
0	FIRST ISSUE											A0	N.T.S.	0000-B99-POI-A-036	A

This document is the property of NATIONAL THERMAL POWER CORPORATION LTD.
No part of this document will be reproduced by any means without the written permission.

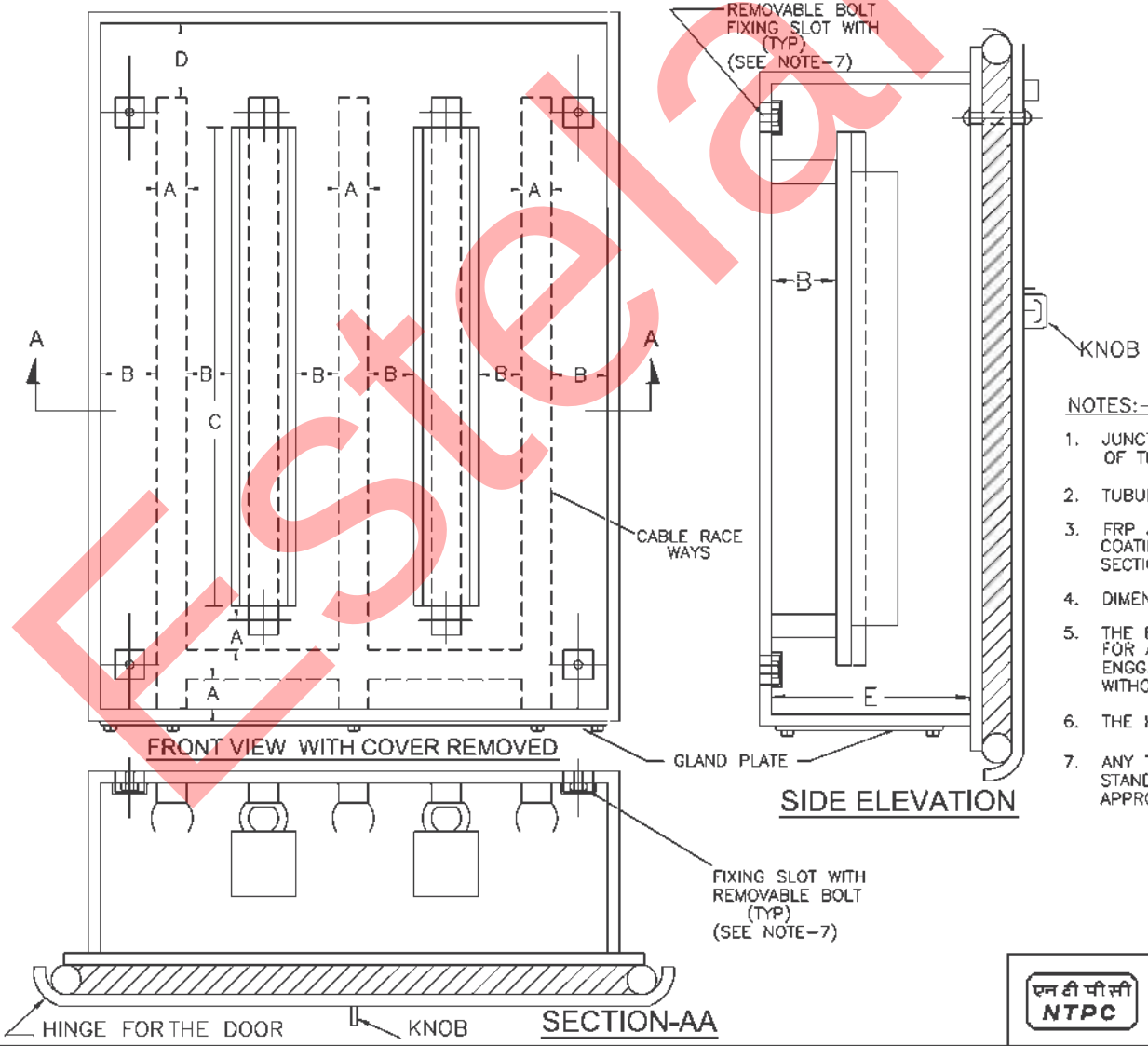

A – 75 mm
B – 25 mm
C – SEE NOTE-4
D – 100 mm
E – 150 mm

NOTES:–

1. JUNCTION BOXES SHALL HAVE GLAND PLATES AT THE BOTTOM OF THE BOX ONLY.
2. TUBULAR TYPE GASKETS WILL BE USED.
3. FRP JUNCTION BOXES, SHALL BE PROVIDED WITH POLYEUTHERENE COATING. ALSO REFER SUB SECTION INST CABLE, PART–B SECTION–VI FOR DETAILES.
4. DIMENSION OF 'C' SHALL BE BASED ON NO. OF TERMINAL BLOCKS.
5. THE EXACT TYPE & DIMENSION OF JUNCTION BOXES TO BE USED FOR A PARTICULAR APPLICATION SHALL BE AS DECIDED DURING DETAIL ENGG. STAGE AND SHALL BE SUBJECT TO EMPLOYER's APPROVAL WITHOUT ANY PRICE REPERCUSSION.
6. THE KNOB FOR ALL THE JUNCTION BOXES SHALL BE IDENTICAL.
7. ANY TYPE OF SEALED FIXING ARRANGEMENT AS PER MANUFACTURER's STANDARD CAN ALSO BE PROVIDED SUBJECT TO EMPLOYER's APPROVAL.

FOR TENDER PURPOSE ONLY

एन टी पी सी NTPC

N T P C LIMITED
(A GOVERNMENT OF INDIA ENTERPRISE)
ENGINEERING DIVISION

REV.NO.	DESCRIPTION	DRAWN	DESIGN	CHKD.	M	E	C	C&I	ARCH.	APPD	DATE
D	GENERALLY REVISED		JM	KS							21.08.12
C	GENERALLY REVISED		JM	KS							04.08.06
B	GENERALLY REVISED	S.K.	A.R	PS							
A	FIRST ISSUE	S.K.	A.R	PS							04.05.05

CLEARED BY

PROJECT: TYPICAL THERMAL POWER PLANT

TITLE: G.A. OF JUNCTION BOX

SIZE	SCALE	DRG. NO.	REV. NO.
A4	N.T.S.	0000-999-POI-A-017	D

Estelar

QUALITY ASSURANCE FOR INSTRUMENTS

Estelar

TYPE TEST REQUIREMENTS

1.00.00 TYPE TEST REQUIREMENTS

1.01.00 General Requirements

1.01.01 The Contractor shall furnish the type test reports of all type tests as per relevant standards and codes as well as other specific tests indicated in this specification. A list of such tests are given for various equipment in table titled 'TYPE TEST REQUIREMENT FOR C&I SYSTEMS' at the end of this chapter and under the item Special Requirement for Solid State Equipments/Systems. For the balance equipment instrument, type tests may be conducted as per manufactures standard or if required by relevant standard.

(a) Out of the tests listed, the Bidder/ sub-vendor/ manufacturer is required to conduct certain type tests specifically for this contract (and witnessed by Employer or his authorized representative) even if the same had been conducted earlier, as clearly indicated subsequently against such tests.

(b) For the rest, submission of type test results and certificate shall be acceptable provided.

i. The same has been carried out by the Bidder/ sub-vendor on exactly the same model /rating of equipment.

ii. There has been no change in the components from the offered equipment & tested equipment.

iii. The test has been carried out as per the latest standards alongwith amendments as on the date of Bid opening but not more than five (5) year back.

(c) In case the approved equipment is different from the one on which the type test had been conducted earlier or any of the above grounds, then the tests have to be repeated and the cost of such tests shall be borne by the Bidder/ sub-vendor within the quoted price and no extra cost will be payable by the Employer on this account.

1.01.02 As mentioned against certain items, the test certificates for some of the items shall be reviewed and approved by the main Bidder or his authorized representative and the balance have to be approved by the Employer.

1.01.03 The schedule of conduction of type tests/ submission of reports shall be submitted and finalized during pre-award discussion.

Estelar

CLAUSE NO.	TECHNICAL REQUIREMENTS
1.01.04	For the type tests to be conducted, Contractor shall submit detailed test procedure for approval by Employer. This shall clearly specify test setup, instruments to be used, procedure, acceptance norms (wherever applicable), recording of different parameters, interval of recording precautions to be taken etc. for the tests to be carried out.
1.01.05	The Bidder shall indicate in the relevant BPS schedule, the cost of the type test for each item only for which type tests are to be conducted specifically for this project. The cost shall only be payable after conduction of the respective test in presence of authorize representative of Employer. If a test is waived off, then the cost shall not be payable.
2.00.00	**SPECIAL REQUIREMENT FOR SOLID STATE EQUIPMENTS/ SYSTEMS**
2.01.00	The minimum type test reports, over and above the requirements of above clause, which are to be submitted for each of the major C&I systems Analyzer instruments, various PLCs etc. shall be as indicated below: i) Surge Protections for Solid State Equipments/ Systems All solid state systems/ equipments shall be able to withstand the electrical noise and surges as encountered in actual service conditions and inherent in a power plant. All the solid state systems/ equipments shall be provided with all required protections that needs the surge withstand capability as defined in ANSI 37.90a/ IEEE-472. Hence, all front end cards which receive external signals like Analog input & output modules, Binary input & output modules etc. including power supply, data highway, data links shall be provided with protections that meets the surge withstand capability as defined in ANSI 37.90a/ IEEE-472. Complete details of the features incorporated in electronics systems to meet this requirement, the relevant tests carried out, the test certificates etc. shall be submitted alongwith the proposal. As an alternative to above, suitable class of IEC-60255-4 which is equivalent to ANSI 37.90a/ IEEE-472 may also be adopted for SWC test. ii) Dry Heat test as per IEC-68-2-2 or equivalent. iii) Damp Heat test as per IEC-68-2-3 or equivalent. iv) Vibration test as per IEC-68-2-6 or equivalent. v) Electrostatic discharge tests as per IEC 61000-4-2 or equivalent. vi) Radio frequency immunity test as per EN 50082-2 or equivalent.

Estelar

vii) Electromagnetic immunity as per EN 61131-2 or equivalent.

Test listed at item no. v, vi, vii, above are applicable for front end cards only as defined under item (i) above.

Estelar

3.00.00 TYPE TEST REQUIREMENT FOR C&I SYSTEMS

Sl No	Item	Test requirement	Standard	Test to be specifically conducted	NTPC's approval req. On test certificate	Remarks
Col 1	Col 2	Col 3	Col 4	Col 5	Col 6	Col 7
1	Elect. Metering instruments	As per standard (col 4)	IS-1248	No	Yes	
2	Electronic transmitter	As per standard (col 4)	BS-6447 / IEC-60770	No	Yes	
3	INSTRUMENTATION CABLES TWISTED & SHIELDED			No	Yes	
4	Pressure gauge	Degree of protection test	IS-2147	No	No	
		Temp interference test	IS -3624	No	No	
5	Temperature gauge	Degree of protection test	IS-2147	No	No	
6	Pressure & DP switch	Degree of protection test	IS-2147	No	No	
		As per standard (col 4)	BS 6134	No	No	
7	Level switch	Degree of protection test	IS-2147	No	No	
8	Control valves	CV Test	ISA 75.02	No	Yes	
9	Flow Nozzles & Orifice plate	Calibration	ASME PTC , BS 1042	No	Yes	
10	PLCs	All tests as per IEC-1131	IEC-601131	No	Yes	

Estelar

Sl No	Item	Test requirement	Standard	Test to be specifically conducted	NTPC's approval req. On test certificate	Remarks
Col 1	Col 2	Col 3	Col 4	Col 5	Col 6	Col 7
11	Junction Box	Degree of protection test	IS-13947	No	Yes	
12	Battery charger (Not required for inbuilt chargers)	Degree of protection test	IS-13947	No	No	
		Short circuit current capability	IEC-60146-2	No	Yes	
		Temp rise test without redundant fans	Approved procedure, IEC 60146-2	No	Yes	
		SWC test	Approved procedure	No	Yes	
		Burn-in-test	Approved procedure	No	Yes	
		Efficiency	IEC-60146-2,	No	Yes	
		Audible Noise Test	IEC 60146-2	No	Yes	
		Fuse Clearing Capability	Approved procedure	No	Yes	
		Relative harmonic content	Approved procedure	No	Yes	

Estelar

Sl No	Item	Test requirement	Standard	Test to be specifically conducted	NTPC's approval req. On test certificate	Remarks
Col 1	Col 2	Col 3	Col 4	Col 5	Col 6	Col 7
		ESD immunity test	IEC-61000-4-2-9(1)	No	Yes	
		Radio interference	IEC 60146-2	No	Yes	
		Over Load Test on Inverter & charger	Approved procedure	No	Yes	
		Restart Test	IEC 60146-2	No	Yes	
		Output voltage tolerance	Approved	No	Yes	
		Output voltage Harmonic content	Approved procedure	No	Yes	
		Insulation test	IEC 60146	No	Yes	
		Load Tests	Approved procedure	No	Yes	
		Preliminary light load test	IEC 60146	No	Yes	
		Current division / Voltage division	IEC 60146-2	No	Yes	
13	Battery	As per standard (col 4)	IEC –623 / IS 10918 for Ni-Cd IS-1652 for Plante Lead Acid	No	Yes	
14	Voltage stabilizers	Over Load Test	Approved procedure	No	Yes	

Estelar

Sl No	Item	Test requirement	Standard	Test to be specifically conducted	NTPC's approval req. On test certificate	Remarks
Col 1	Col 2	Col 3	Col 4	Col 5	Col 6	Col 7
		Temp rise test without redundant fans	Approved procedure	No	Yes	

Estelar

MEASURING INSTRUMENTS (PRIMARY AND SECONDARY)

TESTS / ITEMS	Dimensions (R)	Make, Model, Type, Rating (R)	Process / Electrical connection (R)	Calibration (R)	Test as per standard(R)	Insulation Resistance (R)	IBR Certification (if applicable)(R)	Hydro Test(R)	Material Test certificate ®
1. PR Gauge (IS-3624)	Y	Y	Y	Y	Y				
2. Temp. Gauge (BS-5235)	Y	Y	Y	Y	Y				
3. Pr./D.P.Switch(BS-6134)	Y	Y	Y	Y	Y	Y			
4. Electronic Transmitter(IEC-60770)	Y	Y	Y	Y	Y	Y			
5. Temp. Switch	Y	Y	Y	Y	Y	Y			
6. Recorder(IS-9319/ANSI C-39.4)	Y	Y	Y	Y	Y	Y			
7. Vertical indicators	Y	Y	Y	Y		Y			
8. Digital Indicators	Y	Y	Y	Y		Y			
9. Integrators	Y	Y	Y	Y					
10. Electrical Metering Instrument (IS-1248)	Y	Y	Y	Y	Y	Y			
11. Transducer (IEC-688)	Y	Y	Y	Y	Y	Y			
12. Thermocouples (IEC – 754 / ANSI-MC-96.1)	Y	Y	Y	Y	Y	Y			
13. RTD(IEC-751)	Y	Y	Y	Y	Y	Y			
14. Thermowell	Y		Y				Y	Y	Y

R-Routine Test A- Acceptance Test Y – Test applicable

: Note: **1) Detailed procedure of Environmental Stress Screening shall be as per Quality Assurance Programme in General Technical Conditions. Requirement of test and procedure (if required) finalized during QP finalization**

2) This is an indicative list of tests/checks. The manufacturer is to furnish a detailed quality plan indicating the Practices and Procedure adopted along with relevant supporting documents.

Estelar

MEASURING INSTRUMENTS (PRIMARY AND SECONDARY)

TESTS / ITEMS	Dimensions (R)	Make, Model, Type, Rating (R)	Process / Electrical connection (R)	Calibration (R)	Requirement as per standard (R)	WPS approval (A)	Non-destructive testing (R)	Calculation for accuracy (R)	Insulation Resistance (R)	IBR Certification as applicable (R)	Hydro test (R)	Material test certificate (A)
15. Cold junction compensation box	Y	Y	Y	Y					Y			
16. Orifice plate(BS-1042)	Y	Y	Y	Y *	Y	Y **	Y **			Y	Y **	Y
17. Flow nozzle(BS-1042)	Y	Y	Y	Y *	Y	Y	Y			Y	Y	Y
18. Impact head type element	Y	Y	Y					Y				Y
19. Level transmitter/float type switch	Y	Y	Y	Y					Y	Y	Y	Y
20. Analysers	Y	Y	Y	Y								
21. Dust emission monitors	Y	Y	Y	Y								
*Calibration to be carried out on one flow element of each type and size if calibration carried out as type test same shall not be repeated.												
** If applicable												

R-Routine Test A- Acceptance Test Y – Test applicable

Note: 1) Detailed procedure of Environmental Stress screening test shall be as per Quality Assurance Programme in General Technical Conditions. Requirement of test and procedure (if required) finalized during QP finalization

2) This is an indicative list of tests/checks. The manufacturer is to furnish a detailed quality plan indicating the Practices and Procedure adopted along with relevant supporting documents.

Estelar

Process, Connection & piping FOR C&I SYSTEMS

TESTS / ITEMS	Visual ®	GA, BOM, Layout of component & construction feature®	Dimension ®	Paint Shade/thickness ®	Flattening, flaring, hydrotest, hardness check as per ASTM standard	Component Ratings ®	Wiring ®	Make, Model, Type, Rating®	IR & HV ®	Review of TC for instrument/devices (R)	Accessability of TBs/Devices ®	Illumination,grounding ®	Tubing ®	Leak/Hydro test(A)	Chemical/physical properties of material (A)	Proof pressure test,Dismantling & reassembly test,Hydrulic impulse and vibration test (R)	Tests as per standards & specification
Local Instrument enclosure	Y	Y	Y	Y		Y	Y	Y	Y	Y	Y	Y	Y	Y			
Local instruments racks	Y	Y	Y	Y		Y	Y	Y	Y	Y	Y	Y	Y	Y			
Junction Box	Y	Y	Y	Y *		Y		Y	Y								
Gauge Board	Y	Y	Y	Y		Y		Y		Y			Y	Y			
Impulse pipes and tubes	Y		Y		Y			Y							Y		
Socket weld fittings ANSI B-16.11	Y		Y					Y							Y		Y
Compression fittings	Y		Y					Y						Y	Y	Y	
Instrument valves & Valve manifolds	Y		Y					Y						Y	Y		
Copper tubings ASTM B75	Y							Y									Y

*-applicable for painted junction boxes.

Note: R-Routine Test A- Acceptance Test Y – Test applicable

Note: This is an indicative list of tests/checks. The manufacturer is to furnish a detailed quality plan indicating the Practices and Procedure adopted alongwith relevant supporting documents.

Estelar

INSTRUMENTATION CABLE

TESTS / ITEMS	Conductor Resistance ® & (A)	High Voltage ® & (A)	Insulation Resistance ® & (A)	Constructional detail, dimensions (A)	Outer-Sheathe/core marking, end sealing (A)	Thermal Stability (A) +	Visual, Surface finish (A) +	Electrical Parameters ** (A) +	Persulphate Test (A) +	Overall/Coverage/Continuity (A)	Swidesh chimney Test (SS-4241475) (A) ++	FRLS Test * (A) ++	Tensile & Elongation before & after aging (A) ++	Vol. Resistivity. at room & Elevated Temp. (A) ++	Spark test report review ®
1. Instrument cable twisted and shielded															
Conductor(IS-8130)	Y			Y			Y								
Insulation(VDE-207)				Y	Y	Y	Y						Y		Y
Pairing/Twisting				Y	Y		Y								
Shielding				Y			Y			Y					
Drain wire	Y			Y			Y		Y	Y					
Inner Sheath				Y	Y	Y	Y					Y	Y		
Outer Sheath				Y	Y	Y	Y					Y	Y		
Over all cable	Y	Y	Y	Y	Y		Y	Y			Y			Y	
Cable Drums(IS-10418)				Y			Y								

Note : High Temp. cables shall be subjected to tests as per VDE-207(Part-6) Compensating cables shall be checked for Thermal EMF/Endurance test as per IS 8784.

Note : This is an indicative list of tests/checks. The manufacture is to furnish a detailed Quality Plan indicating his practice & Procedure along with relevant supporting documents during QP finalization for all items.

Note : ® - Routine Test A - Acceptance Test Y - Test Applicable

Note : Sampling Plan for Acceptance test shall be as per IS 8784 (As applicable)

- * FRLS Tests: Oxygen / Temp Index (ASTM D-2863), Smoke Density Rating (ASTM – D 2843), HCL Emission (IEC-754-1)
- ** Characteristic Impedance, Attenuation, Mutual Capacitance, Cross Talk (As applicable)

\+ Sample size will be One No. of each size/type per lot.

++ Sample size will be One No. sample for complete lot offered irrespective of size/type.

Estelar

`

INSTRUMENT INSTALLATION DRAWING

Estelar

1.01.01 **IMPULSE PIPING, TUBING, FITTINGS, VALVES AND VALVE MANIFOLDS**

1.01.02 All impulse pipes shall be of seamless type conforming to ANSI B36.10 for schedule numbers. The size of impulse pipe shall be ½" for Steam & Water Application and ¾" for Air & Flue Gas applications. The rating of material of impulse pipes, tubes, fittings, valves and their installation thereof shall conform to the latest edition of standards as per following table:

Impulse Pipes, Tubes (Material, Rating)	ANSI B31.1, ANSI B31.1a, ANSI/ISA 77.70
Valves (Material, Pr. Class, Size)	ASTM A182/ASTM A105 as per ASME 16.34
Fittings (Size, Rating, Material)	ANSI B31.1, ANSI B31.1a, ASME B16.11-2009
Installation Schemes	BS 6739-2009, ANSI/ISA 77.70

Stainless steel tube shall be provided inside enclosures & racks from tee connection to valve manifold and then to instrument. The source shut-off (primary process root valve) and blow down valve shall be of 1/2 inch size globe valve type for all applications except for air and flue gas service wherein no source shut-off valves are to be provided. Two root valves are to be used wherever pressure is more than 40 Kg/cm^2 or Temp>280 ºC. The end connections of valves shall be of socket welded type. Typical installation scheme of DP Transmitter (inside LIE/LIR) mounted below instrument source point is indicated in Drg. No. 0000-999-POI-A-036. Same scheme with necessary changes shall be applied for other instruments.

1.01.03 The valve manifolds of 316 SS with pressure rating suitable for intended application shall be provided as given below:

Manifold	Application/Measurement
2 Valve	Pressure measurements using pressure transmitters/pressure switches
3 Valve	Pressure measurements using differential pressure transmitter/ switches
5 Valve	Differential Pressure, Flow and Level Measurements

For Pr./D.P gauges, two-way globe/gate valve shall be provided on each impulse line to the instrument in Fluid/Air & Flue Gas applications respectively .

2.00.00 **AIR SUPPLY PIPING**

2.01.01 All pneumatic piping, fittings, valves, air filter cum regulator, purge rotameter and other accessories required for instrument air for the various pneumatic devices/ instruments shall be provided. This will include as a minimum air supply to pneumatically operated control valves, actuators, instruments, continuous and intermittent purging requirements etc.

2.02.00 Instrument air and Service air supply shall be provided for continuous and intermittent purging respectively for all transmitters of mill, dirty air and flue gas applications. Purging Scheme shall be as per Drg. No. 0000-999-POI-A-036.

2.03.00 The Contractor shall also provide SS Tubing and associated fittings (screwed type) of suitable sizes for all pneumatic equipments/actuators (including supply air, signal air and output to actuators) conforming to ANSI 31.1 and 31.3 standard. All other air supply lines shall be of mild steel hot dipped galvanized inside and outside as per IS-1239, heavy duty

Estelar

with threaded ends. Fittings for air supply line shall be of forged carbon steel A234 Gr. WPB galvanized inside and outside, screwed as per ASA B2.1. Dimensions of fittings shall be as per ASA B16.11 of rating 3000 lbs. Air supply piping shall be adequately sloped to prevent accumulation of condensed water within the pipe. The air supply headers, sub-headers and branch pipes shall be supported properly by clamps or supports.

2.04.00 The instrument/service air supply to each equipment/devices requiring air supply shall be provided by a well designed air distribution scheme comprising of 2" GI Pipe Header feeding 1" GI Pipe sub-header feeding ½" pipe at each equipment/device. Instrument air filters cum regulator set with mounting accessories shall be provided for each pneumatic device requiring air supply except for Ash Handling System wherein it shall be provided on instrument air header at each location.

2.05.00 All the isolation valves in the air supply line shall be gate valves as per ASTM B62 inside screw rising stem, screwed female ends as per ASA B2.1. Valve bonnet shall be union type & trim material shall be stainless steel, body rating 150 pounds ASA. The valve sizes shall be ½ inch to 2 inch.

2.06.00 Instrument air filters cum regulator set with mounting accessories shall be provided for pneumatic device requiring air supply. The filter regulators shall be suitable for 10-kg/ sq.cm max. Inlet pressure. The filter shall be of size 5 microns and of material sintered bronze. The air set shall have 2-inch size pressure gauge and built in filter housing blowdown valve. The end connection shall be as per the requirement to be finalized during detailed engineering.

3.00.00 **INSTALLATION AND ROUTING**

3.01.01 All instrument piping, tubing and its accessories shall be supported in a safe manner to prevent excessive vibrations and anchored sufficiently to prevent undue strain on connected equipment. Impulse piping shall be supported at an interval not exceeding 1.5 meters. The slope of the impulse pipe form the process connection to the instrument shall be as per ANSI/ISA 77.70 latest edition and BS 6739-2009. All impulse piping shall be installed to permit free movement due to thermal expansion. Wherever required expansion loops shall be provided.

Condensate pots shall be provided for all level measurements in steam and water services, all flow measurement in steam services and for flow measurements in water services above 120 Deg. C. Colour coding of all impulse pipes shall be done by the Contractor in line with the colour coding being followed for the parent pipes.

4.00.00 **SHOP AND SITE TESTS**

4.01.01 The equipment and work performed as per this Sub-section shall be subject to shop and site test as per requirements of Sub-section-IIIE-04 (Quality Assurance & Inspection) other applicable clauses of this Sub-section and Employer approved quality assurance plan.

4.01.02 Hydrostatic and Pneumatic leakage tests shall be performed on all pipes, tubing and systems and shall conform to ANSI B31.1.

5.00.00 **LOCAL INSTRUMENT ENCLOSURE AND RACKS**

All transmitters, switches etc. for FGD system and other system being provided under the contract shall be suitably grouped together and mounted inside (i) local instruments enclosures in case of open areas of the plant and (ii) In local instrument racks in case of covered areas. The GA of LIE with purging indicated in the Drg. No. 0000-999-POI-A-036 is to be followed by contractor. The GA of LIR shall be similar to LIE except for front/rear doors and side panels.

Estelar

The internal layout shall be such that the impulse piping/ blow down lines are accessible from back side of the enclosure / rack and the transmitters etc. are accessible from front side for easy maintenance. Bulkheads, especially designed to provide isolation from process line vibration shall be installed on instrument enclosures/racks to meet the process sensing line connection requirement. Vibration dampeners shall be installed for each enclosure / rack. The Degree of Protection of LIE and JB of LIE/LIR shall be IP-55.

The enclosures shall be constructed of 3 mm sheet plate and shall be of modular construction with one or more modules and two end assemblies bolted together to form an enclosure. Double inter locking doors shall be provided. The doors shall be the three-point locking type constructed of not less than 1.6 mm thick steel. Doors shall have concealed quick removal type pinned hinges and locking handles. Door locks shall accept the same key.

The instrument racks shall be free standing type constructed of suitable 5 mm thick channel frame of steel and shall be provided with a canopy to protect the equipment mounted in racks from falling objects, water etc. The canopy shall not be less than 3 mm thick steel, and extended beyond the ends of the rack.

Enclosures/Racks shall be reinforced as required to ensure true surface and to provide adequate support for instruments and equipment mounted therein. Centre posts or any member which would reduce access shall not be provided.

Contractor shall provide not more than three variants for LIE/LIR with respect to max. no. transmitters mounted in each LIE/LIR.

5.01.00 ENCLOSURE / RACKS FOR DUAL I/P TEMPERATURE TRANSMITTERS

All Dual Input temperature transmitters for FGD system and other system being provided under the contract shall be suitably grouped together and mounted inside (i) Enclosures in case of open areas of the plant and (ii) Racks in case of covered areas. Integral JB shall be provided with each Enclosure and Rack.

The internal layout shall be such that the transmitters are accessible from both front and back side of the enclosure / rack for easy maintenance.

Enclosure/ Racks shall be of robust and rugged design. Vibration dampeners shall be installed for each enclosure / rack. The Degree of Protection of Enclosure and JB shall be IP-55.

Enclosure and Racks shall be free standing type.

Enclosures/Racks shall be reinforced as required to ensure true surface and to provide adequate support for instruments and equipment mounted therein.

Contractor shall provide not more than five variants for Enclosure/ Rack with respect to max. no. transmitters mounted in each Enclosure/ Rack. However, the maximum number of Transmitters that can be grouped in one Enclosure/ Rack shall be decided during detail Engineering.

Estelar

This document is the property of NATIONAL THERMAL POWER CORPORATION LTD.
No part of this document will be reproduced by any means without the written permission.

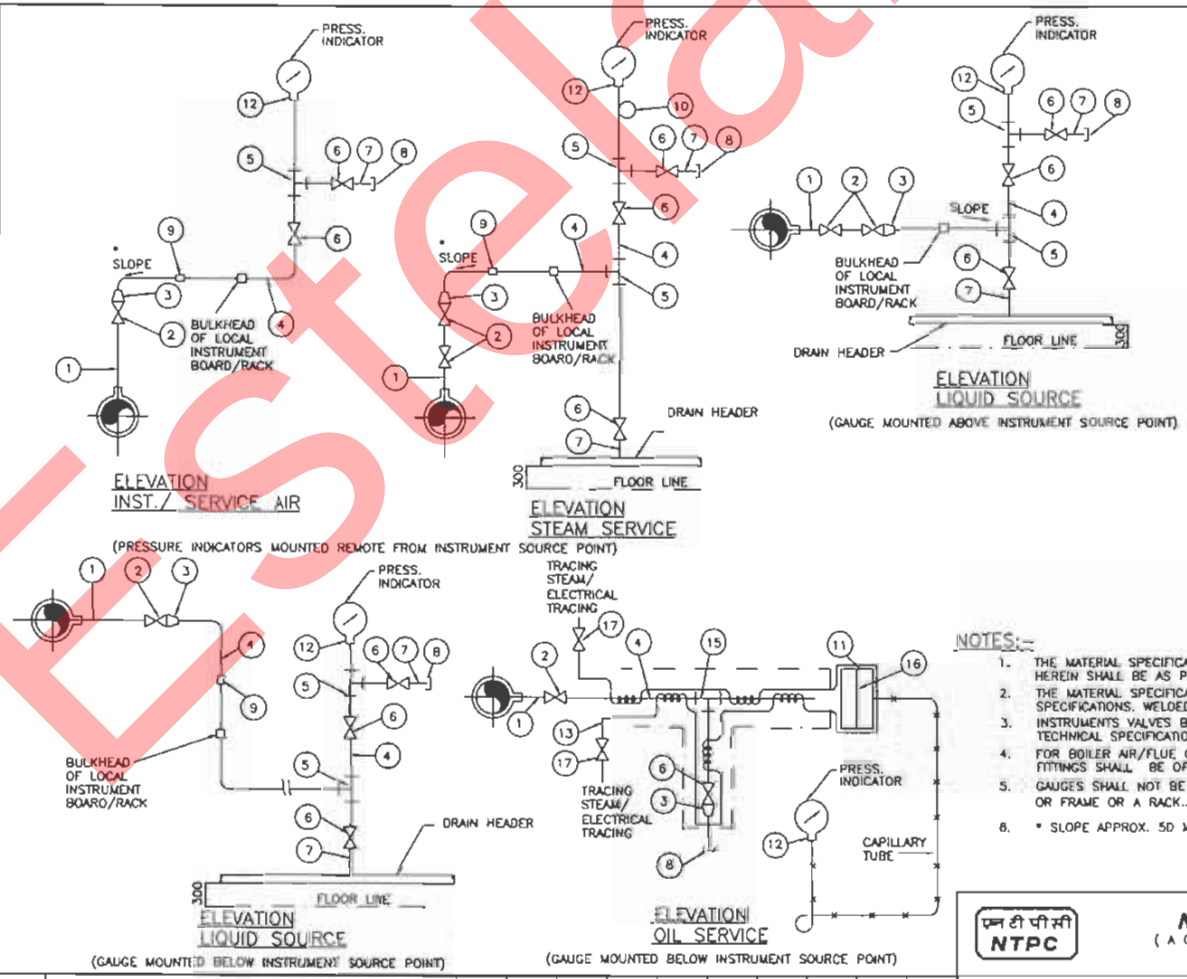

LIST OF MATERIALS

ITEM NO.	DESCRIPTION
1.	1/2", 3/4", 1" NPS SCH 40/80/160/XXS/P91 (AS PER PROCESS REQUIREMENT) NIPPLE OF MATERIAL SAME AS THAT OF MAIN PIPE.
2.	1/2"/3/4"/1' SW GLOBE VALVE/GATE VALVE
3.	3/4" / 1" x 1/2" SW REDUCING INSERT
4.	1/2" / 3/4" PIPE
5.	1/2" / 3/4" SW EQUAL TEE
6.	1/2" / 3/4" SW GLOBE VALVE.
7.	1/2" / 3/4" NPS SW x 1/2" / 3/4" NPT(M) CARBON/ALLOY STEEL NIPPLE.
8.	1/2" / 3/4" NPT(F) CAP.
9.	1/2" / 3/4" PIPE UNION.
10.	6" SS SYPHON
11.	1/2" BLIND 300lbs RF ANSI FLANGE DRILLED AND TAPED FOR 1" NPT PIPE.
12.	SUITABLE ADAPTER.
13.	1/4" CHROME MOLY STEEL TUBE.
14.	
15.	1"/3/4" SW EQUAL TEE.
16.	DIAPHRAGM(WAFER ELEMENT)
17.	ISOLATION VALVE 316 SS,1/4"SW

NOTES:-

1. THE MATERIAL SPECIFICATION AND SCHEDULE NO. OF IMPULSE PIPE & NIPPLE AS LISTED HEREIN SHALL BE AS PER TECHNICAL SPECIFICATIONS.
2. THE MATERIAL SPECIFICATION AND RATING OF FITTINGS AS LISTED SHALL BE AS PER SPECIFICATIONS. WELDED/THREADED FITTINGS SHALL CONFIRM TO ANSI-B.16-11.
3. INSTRUMENTS VALVES BODY STEM MATERIAL AND PRESSURE CLASS SHALL BE AS PER TECHNICAL SPECIFICATIONS.
4. FOR BOILER AIR/FLUE GAS SERVICES SOURCE CONNECTIONS IMPULSE PIPING AND ALL FITTINGS SHALL BE OF 3/4" NB SIZE.
5. GAUGES SHALL NOT BE MOUNTED ON THE PIPE. IT WILL BE MOUNTED ON A CHANNEL OR FRAME OR A RACK..
6. * SLOPE APPROX. 50 MM / METRE.

FOR TENDER PURPOSE ONLY

एन टी पी सी NTPC

N T P C LIMITED
(A GOVERNMENT OF INDIA ENTERPRISE)
ENGINEERING DIVISION

PROJECT: TYPICAL THERMAL POWER PROJECT

TITLE: INSTRUMENT INSTALLATION DIAGRAM (FOR PRESSURE GAUGE)

REV.NO.	DESCRIPTION	DRAWN	DESIGN	CHKD.	M	E	C	C&I	ARCH.	APPD	DATE
A	FIRST ISSUE							T.G.			21.08.12

CLEARED BY

SIZE	SCALE	DRG. NO.	REV. NO.
A3	N.T.S.	0000-999-POI-A-022	A

Estelar

This document is the property of NATIONAL THERMAL POWER CORPORATION LTD.
No part of this document will be reproduced by any means without the written permission.

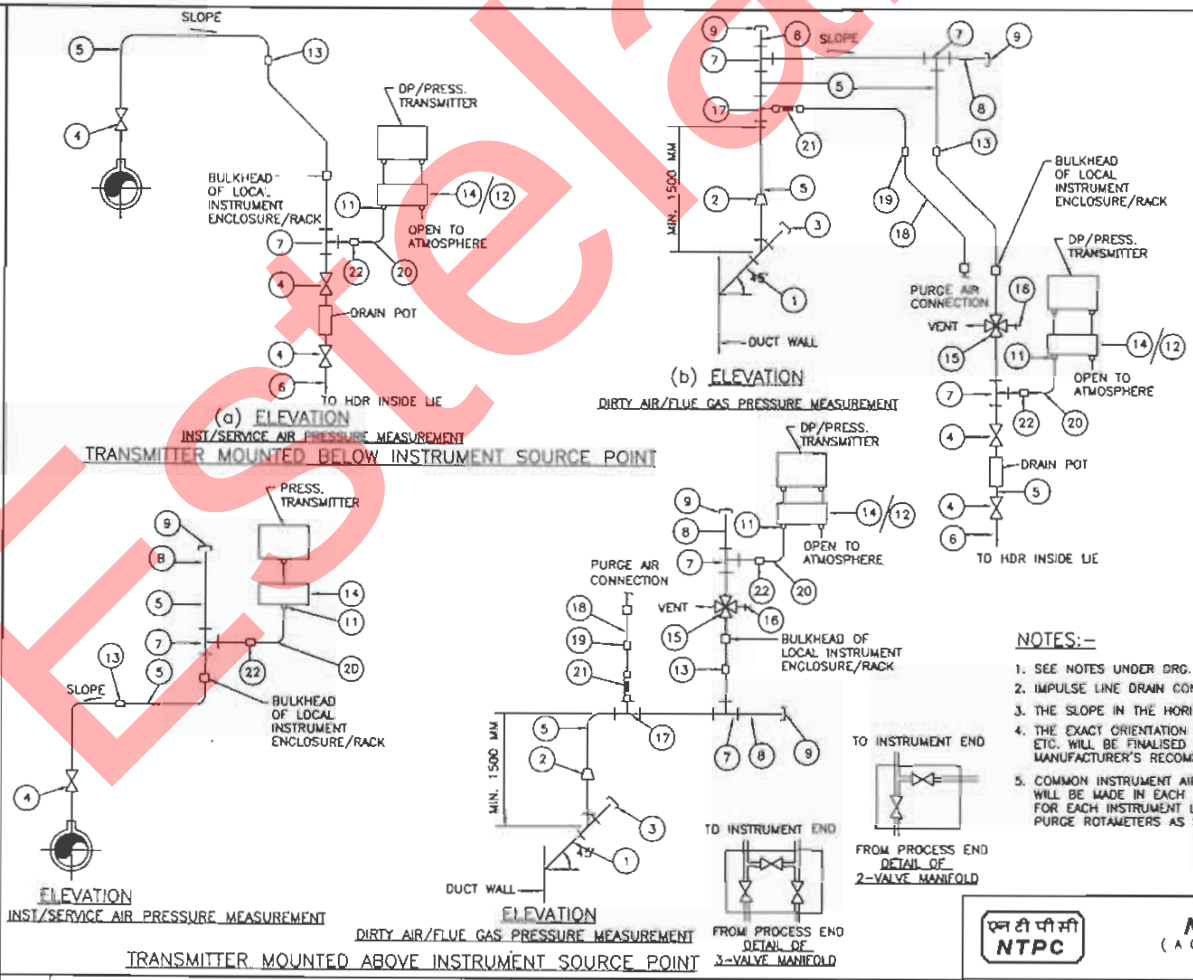

LIST OF MATERIALS

ITEM NO.	DESCRIPTION
1.	42 X 405 MM M.S. BLACK PIPE
2.	M42x2 TO 3/4" REDUCING INSERT
3.	M42x2(F) M.S.CAP
4.	3/4" SW GLOBE VALVE/GATE VALVE
5.	3/4" NPS PIPE
6.	3/4" NPS SW 3/4" NPT(M) CS/AS NIPPLE
7.	3/4" SW EQUAL TEE
8.	3/4" NPS SCH 80 CARBON/ALLOY STEEL NIPPLE
9.	3/4" NPT(F) CS/AS CAP
10.	3/4" SW CS/AS EQUAL CROSS
11.	1/2" TUBE ADOPTER
12.	3 VALVE MANIFOLD
13.	3/4" PIPE UNION
14.	2 VALVE MANIFOLD
15.	3/4" SW 4 WAY VALVE
16.	QUICK DISCONECT FITTING
17.	3/4"SWx1/2"SW BRANCH TEE
18.	1/2" NB SEAMLESS GI PIPE
19.	1/2" NPT (F) GI FITTING
20.	SS TUBE
21.	FLEXIBLE HOSE WITH ONE END SOCKET WELDED (PIPE SIDE) & OTHER END WITH SUITABLE FITTINGS.
22.	3/4" x 1/2" S.S. TUBE UNION

NOTES:-

1. SEE NOTES UNDER DRG. NO.0000-999-POI-A-022.
2. IMPULSE LINE DRAIN CONNECTIONS SHALL BE DONE AS PER TECHNICAL SPECIFICATIONS
3. THE SLOPE IN THE HORIZONTAL OF THE IMPULSE PIPE SHALL BE APPROX. 50 mm/mtr.
4. THE EXACT ORIENTATION OF THE TRANSMITTERS WITH RESPECT TO VALVE MANIFOLDS ETC. WILL BE FINALISED DURING DETAILED ENGINEERING KEEPING IN VIEW THE MANUFACTURER'S RECOMMENDATIONS.
5. COMMON INSTRUMENT AIR HEADER (1"NB) USING REDUNDANT AIR FILTER REGULATORS WILL BE MADE IN EACH TRANSMITTER ENCLOSURE REQUIRING PURGE AIR. PURGE AIR FOR EACH INSTRUMENT LINE SHALL BE TAPPED FROM THIS HEADER USING INDIVIDUAL PURGE ROTAMETERS AS SHOWN IN DRG. NO. 0000-999-POI-A-034 TYPICALLY.

FOR TENDER PURPOSE ONLY

एन टी पी सी
NTPC

N T P C LIMITED
(A GOVERNMENT OF INDIA ENTERPRISE)
ENGINEERING DIVISION

PROJECT: TYPICAL THERMAL POWER PROJECT

TITLE: INSTRUMENT INSTALLATION DIAGRAM
(PRESSURE MEASUREMENT USING PRESS / DP TRANSMITTERS
(INST./SERVICE, DIRTY AIR/FLUE GAS)

REV.NO	DESCRIPTION	DRAWN	DESIGN	CHKD.	M	E	C	C&I	ARCH.	APPD	DATE
A	FIRST ISSUE							T.G.			21.08.12

CLEARED BY

SIZE	SCALE	DRG. NO.	REV. NO.
A3	N.T.S.	0000-999-POI-A-023	A

Estelar

This document is the property of NATIONAL THERMAL POWER CORPORATION LTD.
No part of this document will be reproduced by any means without the written permission.

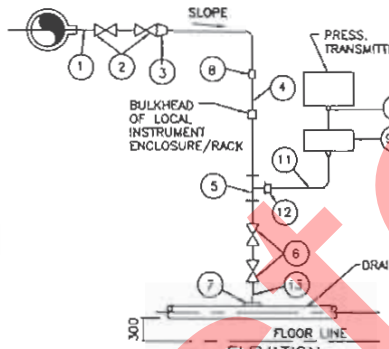

ELEVATION
TRANSMITTER MOUNTED BELOW INSTRUMENT SOURCE POINT

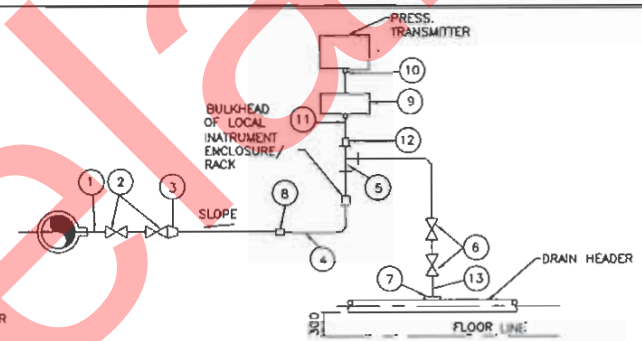

ELEVATION
TRANSMITTER MOUNTED ABOVE INSTRUMENT SOURCE POINT

LIQUID PRESSURE MEASUREMENT

LIST OF MATERIALS

ITEM NO.	DESCRIPTION
1.	1/2" / 3/4"/1"NPS SCH. 80/160/XXS/P91 NIPPLE OF MATERIAL SAME AS THAT OF MAIN PIPE
2.	3/4"/1" SW GLOBE VALVE
3.	3/4"/1" TO 1/2" REDUCING INSERT
4.	1/2" NPS PIPE
5.	1/2" SW EQUAL TEE
6.	1/2"SW GLOBE VALVE
7.	1/2"NPS SCH. 80/160 SWx1/2"CS/AS COUPLER
8.	1/2" PIPE UNION
9.	2/3 VALVE MANIFOLD (FOR DETAIL SEE DRAWING NO.0000-102-POI-A-023.
10.	SUITABLE ADAPTER
11.	SS TUBE
12.	1/2" PIPE x 1/2"TUBE UNION
13.	1/2"NPS SCH. 80/160 SWx1/2" NPT(M) CS/AS NIPPLE

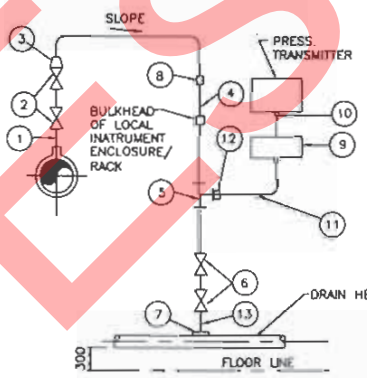

ELEVATION
TRANSMITTER MOUNTED BELOW INSTRUMENT SOURCE POINT

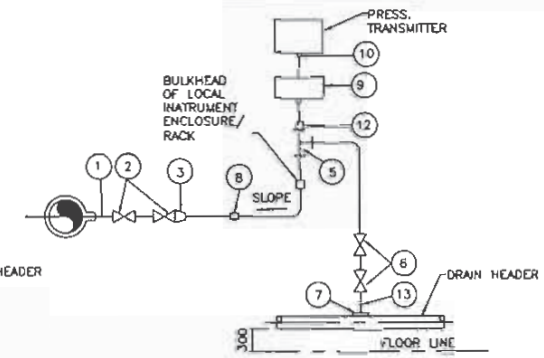

ELEVATION
TRANSMITTER MOUNTED ABOVE INSTRUMENT SOURCE POINT

STEAM PRESSURE MEASUREMENT

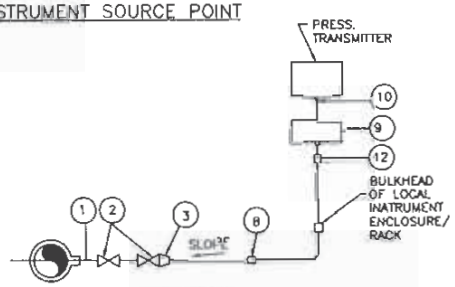

ELEVATION
VACCUM PRESSURE MEASUREMENT

NOTES:-

1. SAME NOTES UNDER DRG. NO. 0000-999-POI-A-023.
2. FOR VACUUM APPLICATION OTHER PORT OF TRANSMITTER SHALL BE KEPT OPEN TO ATMOSPHERE.

FOR TENDER PURPOSE ONLY

एन टी पी सी
NTPC

N T P C LIMITED
(A GOVERNMENT OF INDIA ENTERPRISE)
ENGINEERING DIVISION

PROJECT: TYPICAL THERMAL POWER PROJECT

TITLE: INSTRUMENT INSTALLATION DIAGRAM
(PRESSURE MEASUREMENT USING PRESS /DP TRANSMITTERS STEAM/LIQUID VACUUM)

REV.NO	DESCRIPTION	DRAWN	DESIGN	CHKD.	M	E	C	C&I	ARCH.	APPD	DATE
A	FIRST ISSUE							T.G.			21.08.12

CLEARED BY

SIZE	SCALE	DRG. NO.	REV. NO.
A3	N.T.S.	0000-999-POI-A-025	A

Estelar

This document is the property of NATIONAL THERMAL POWER CORPORATION LTD.
No part of this document will be reproduced by any means without the written permission.

Estelar

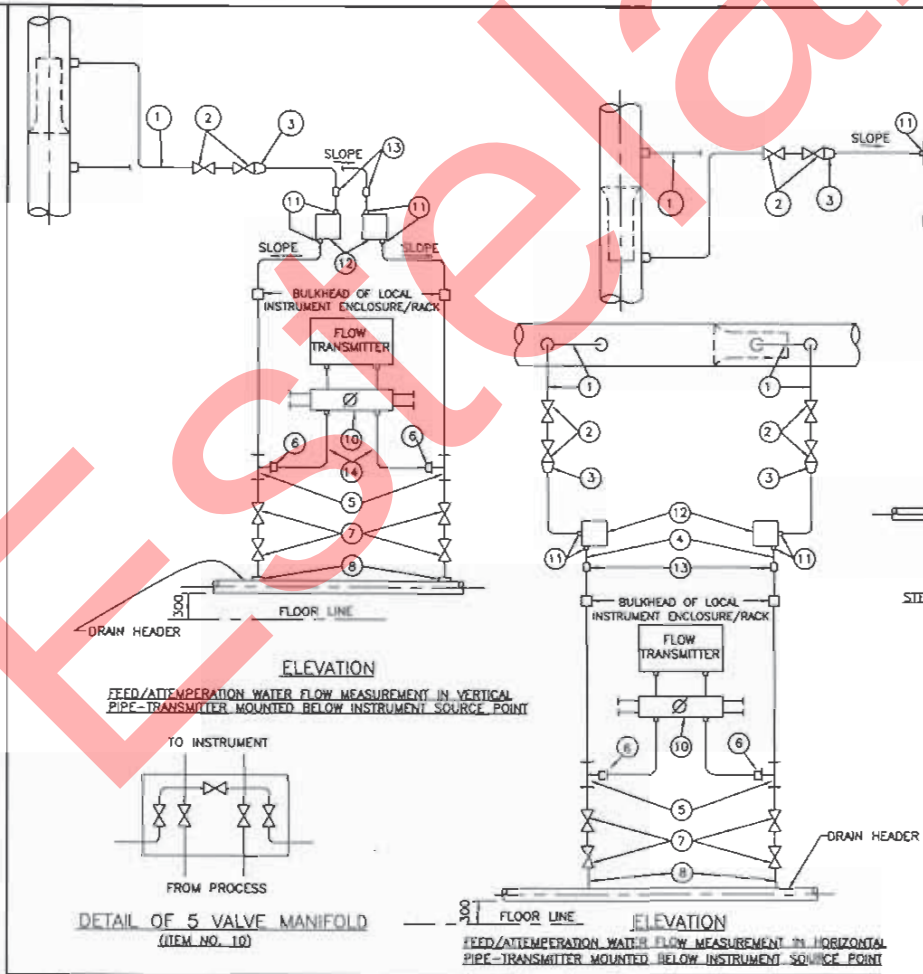

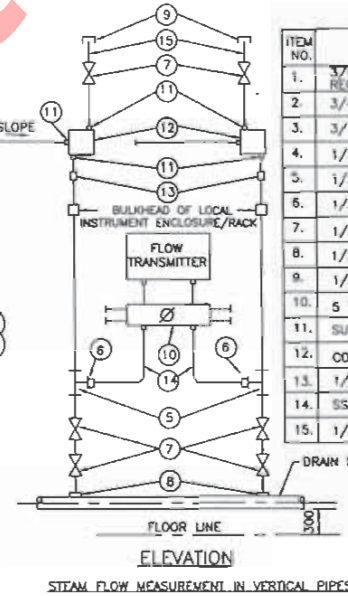

LIST OF MATERIALS

ITEM NO.	DESCRIPTION
1.	3/4" /1"NPS SCH. 80/160/XXS/P91 (AS PER PROCESS REQUIREMENT) NIPPLE OF MATERIAL SAME AS THAT OF MAIN PIPE.
2.	3/4"/1" SW GLOBE VALVE.
3.	3/4"/1" TO 1/2" REDUCING INSERT
4.	1/2" NPS PIPE
5.	1/2" SW EQUAL TEE
6.	1/2" PIPE x 1/2" TUBE UNION
7.	1/2" SW GLOBE VALVE.
8.	1/2"NPS SCH. 80/160 SWx1/2" SW CS/AS COUPLER
9.	1/2" NPT (F) CAP
10.	5 VALVE MANIFOLD
11.	SUITABLE ADAPTER
12.	CONDENSATE POT (RESERVOIR)
13.	1/2" PIPE UNION
14.	SS TUBE
15.	1/2"NPS SCH. 80/160 SWx1/2" NPT (M) CS/AS NIPPLE

NOTES:-

1. SAME NOTES UNDER DRG. NO. 0000-999-POI-A-023.
2. CONDENSATE POTS SHALL BE PROVIDED FOR ALL STEAM SERVICES.
3. FOR WATER SERVICES CONDENSATE POTS SHALL BE PROVIDED ONLY IN THOSE CASES WHERE TEMP. > 120°C

FOR TENDER PURPOSE ONLY

एन टी पी सी NTPC

N T P C LIMITED
(A GOVERNMENT OF INDIA ENTERPRISE)
ENGINEERING DIVISION

PROJECT: TYPICAL THERMAL POWER PROJECT

TITLE: INSTRUMENT INSTALLATION DIAGRAM
FLOW MEASUREMENT (USING FLOW NOZZLES)
STEAM & FEEDWATER

REV.NO.	DESCRIPTION	DRAWN	DESIGN	CHKD.	M	E	C	C&I	ARCH.	APPD	DATE
A	FIRST ISSUE							T.G.			21.08.12

CLEARED BY

SIZE	SCALE	DRG. NO.	REV. NO.
A3	N.T.S.	0000-999-POI-A-026	A

This document is the property of NATIONAL THERMAL POWER CORPORATION LTD.
No part of this document will be reproduced by any means without the written permission.

Estelar

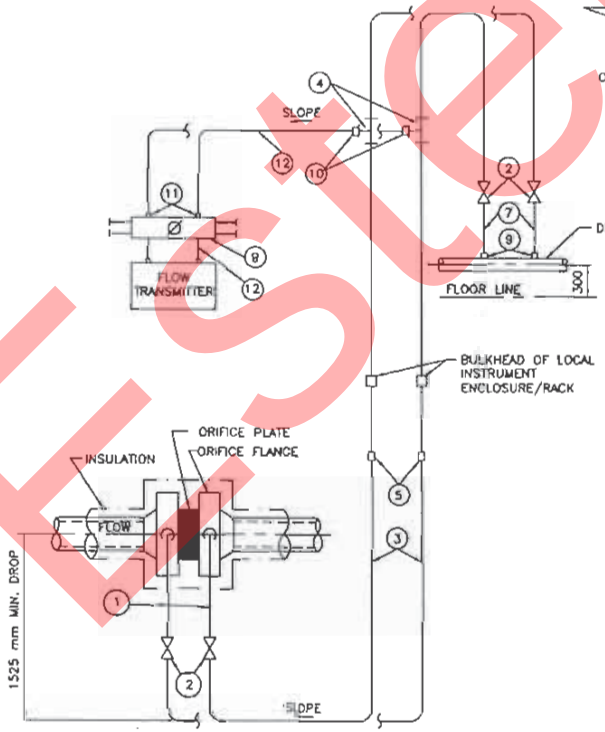

ELEVATION
HORIZONTAL PIPE RUN
TRANSMITTER MOUNTED ABOVE INSTRUMENT SOURCE POINT

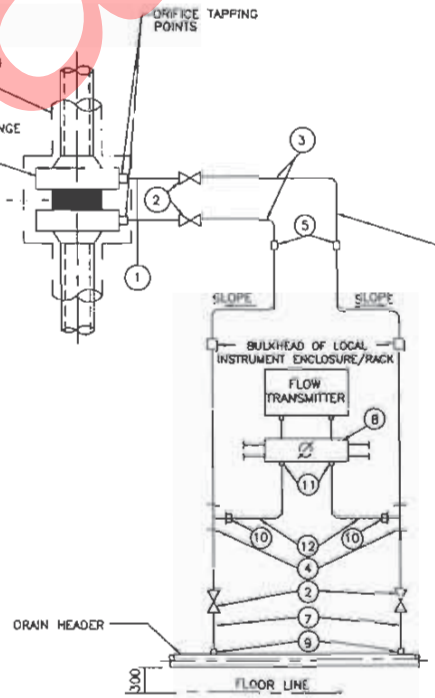

ELEVATION
VERTICAL PIPE RUN
TRANSMITTER MOUNTED BELOW INSTRUMENT SOURCE POINT

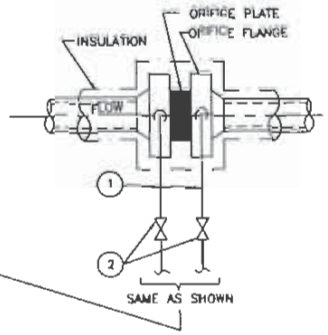

ELEVATION
HORIZONTAL PIPE RUN

LIST OF MATERIALS

ITEM NO.	DESCRIPTION
1.	1/2"NPS SCH. 80 NIPPLE OF MATERIAL SAME AS THAT OF MAIN PIPE WITH NECESSARY ATTACHMENT TO FLANGE OF ORIFICE
2.	1/2"SW GLOBE VALVE
3.	1/2" NPS PIPE
4.	1/2" SW EQUAL TEE
5.	1/2" PIPE UNION
6.	–
7.	1/2"NPS SCH. 80 SWx1/2"NPT (M) S.S. NIPPLE
8.	5 VALVE MANIFOLD FOR DETAIL REFER DRAWING NO.0000-102-POI-A-026.
9.	1/2" T SW HALF COUPLET
10.	1/2" PIPE x 1/2" TUBE UNION
11.	SUITABLE ADAPTER
12.	SS TUBE

NOTES:-

1. SAME NOTES AS UNDER DRG. NO. 0000-999-POI-A-023.

FOR TENDER PURPOSE ONLY

एन टी पी सी
NTPC

N T P C LIMITED
(A GOVERNMENT OF INDIA ENTERPRISE)
ENGINEERING DIVISION

PROJECT: TYPICAL THERMAL POWER PROJECT

TITLE: INSTRUMENT INSTALLATION DIAGRAM
FLOW MEASUREMENT (USING ORIFICE PLATES)
CONDENSATE & SERVICE WATER

REV.NO	DESCRIPTION	DRAWN	DESIGN	CHKD.	M	E	C	C&I	ARCH.	APPD	DATE
A.	FIRST ISSUE							T.G.			21.08.12

CLEARED BY

SIZE	SCALE	DRG. NO.	REV. NO.
A3	N.T.S.	0000-999-POI-A-027	A

This document is the property of NATIONAL THERMAL POWER CORPORATION LTD.
No part of this document will be reproduced by any means without the written permission.

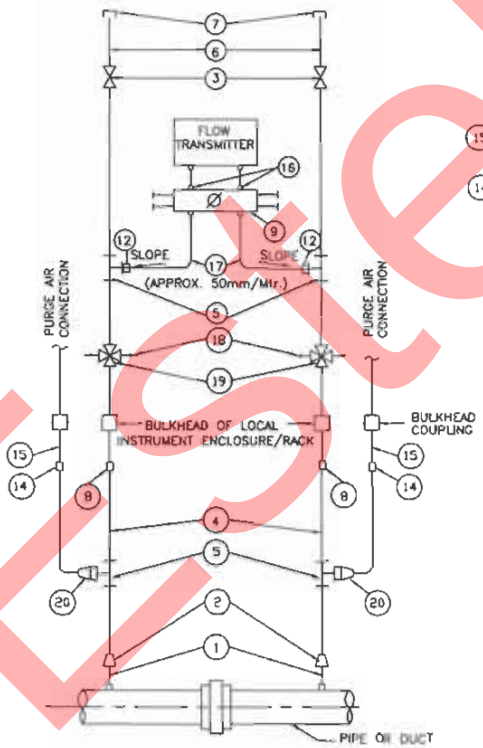

ELEVATION

TRANSMITTER MOUNTED ABOVE INSTRUMENT SOURCE POINT

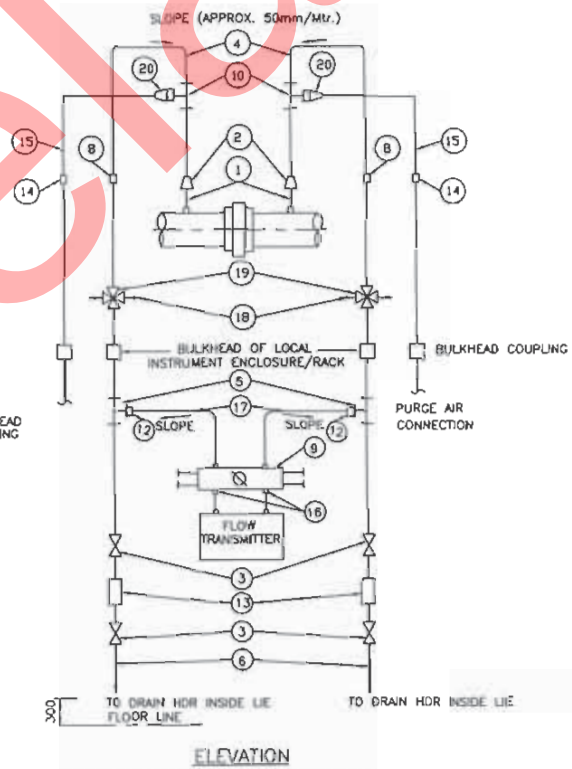

ELEVATION

TRANSMITTER MOUNTED BELOW INSTRUMENT SOURCE POINT

AIR/GAS FLOW MEASUREMENT USING HEAD TYPE PRIMARY ELEMENT

LIST OF MATERIALS

ITEM NO.	DESCRIPTION
1.	42x4.06mm M.S. BLACK PIPE.
2.	M 42x2 TO 3/4"SW REDUCING INSERT.
3.	3/4" SW GLOBE VALVE.
4.	3/4" PIPE.
5.	3/4" SW EQUAL TEE.
6.	3/4" SCH. 80 SWx3/4" NPT (M) CS/AS NIPPLE
7.	3/4" NPT (F) CAP.
8.	3/4" PIPE UNION.
9.	5 VALVE MANIFOLD FOR DETAIL REFER DRAWING NO.0000-102-POI-A-028.
10.	3/4" SW EQUAL TEE.
11.	3/4" SW GATE VALVE.
12.	3/4" PIPE x 1/2" TUBE UNION
13.	DRAIN POT.
14.	1/2" GI FITTING
15.	1/2" NB GI PIPE
16.	SUITABLE ADAPTER
17.	SS TUBE
18.	QUICK DISCONNECT FITTINGS.
19.	3/4" SW 4 WAY VALVE.
20.	3/4" x1/2" REDUCER.

NOTES:-

1. SAME NOTES AS UNDER DRG. NO. 0000-999-POI-A-023.

FOR TENDER PURPOSE ONLY

एन टी पी सी NTPC

N T P C LIMITED
(A GOVERNMENT OF INDIA ENTERPRISE)
ENGINEERING DIVISION

PROJECT: TYPICAL THERMAL POWER PROJECT

TITLE: INSTRUMENT INSTALLATION DIAGRAM (FLOW MEASUREMENT AIR/GAS)

REV.NO.	DESCRIPTION	DRAWN	DESIGN	CHKD.	M	E	C	C&I	ARCH.	APPD	DATE
A	FIRST ISSUE							T.G.			21.08.12

CLEARED BY

SIZE	SCALE	DRG. NO.	REV. NO.
A3	N.T.S.	0000-999-POI-A-028	B

Estelar

This document is the property of NATIONAL THERMAL POWER CORPORATION LTD.
No part of this document will be reproduced by any means without the written permission.

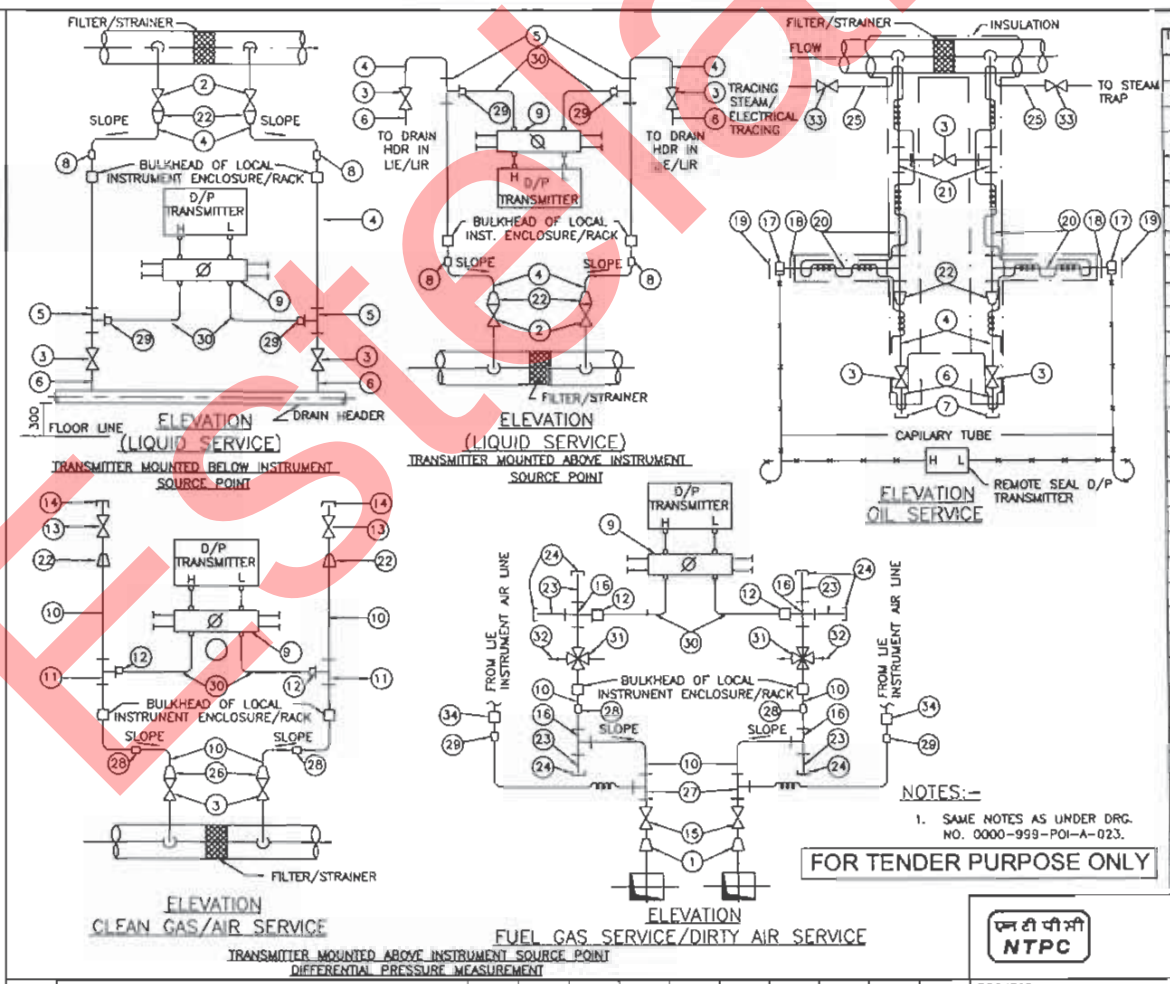

NOTES:-

1. SAME NOTES AS UNDER DRG. NO. 0000-999-POI-A-023.

FOR TENDER PURPOSE ONLY

LIST OF MATERIALS

ITEM NO.	DESCRIPTION
1.	42x2 TO 3/4" SW REDUCING INSERT.
2.	3/4" SW GLOBE VALVE.
3.	1/2" SW GLOBE VALVE FOR LIQUID APPLICATION & 3/4"/1" IN GAS/AIR APPLICATION
4.	1/2" NPS 40/80/160 (AS PER PROCESS REQUIREMENT) CARBON/ALLOY STEEL PIPE.
5.	1/2" SW EQUAL TEE.
6.	1/2" NPS SW x 1/2" NPT (M) NIPPLE.
7.	1/2" NPT (F) CAP.
8.	1/2" PIPE x 1/2" PIPE UNION.
9.	5 VALVE MANIFOLD (FOR DETAIL REFER DRAWING NO.0000-999-POI-A-028.
10.	3/4" SCH 80 CARBON/ALLOY STEEL PIPE.
11.	3/4"/1/2" SW EQUAL TEE.
12.	3/4"x1/2" TUBE UNION.
13.	1/2" SCREWED GLOBE VALVE.
14.	1/2" NPT (M) PLUG.
15.	3/4" SW GATE VALVE.
16.	3/4" SW EQUAL CROSS.
17.	WAFER ELEMENT FOR USE WITH 3"ANSI R.F. VALVE.
18.	3"BLIND 300lbs R.F. WELD NECK FLANGE DRILLED FOR 1" SCH. 40/80 PIPE.
19.	3" BLIND FLANGE.
20.	1"NPS SCH. 40/80 (AS PER PROCESS REQUIREMENT) CS PIPE.
21.	1" SW EQUAL TEE.
22.	3/4" x 1/2"SW REDUCING INSERT.
23.	3/4" SW x 3/4" NPT (M) CS/AS NIPPLE
24.	3/4" NPT (F) CS/AS CAP.
25.	1/4" NPS ALLOY STEEL PIPE.
26.	1" x 3/4" SW REDUCING INSERT.
27.	3/4" SW x 1/2" PSW BRANCH TEE.
28.	3/4" PIPE UNION
29.	1/2" CLAMP UNION (THREADED) SUITABLE FOR FLEXIBLE CONNECTION OF NYLON REINFORCED PVC TUBE
30.	SS TUBE
31.	3/4" SW 4 WAY VALVE.
32.	QUICK DISCONNECT FITTINGS.
33.	1/4" SW ISOLATION VALVE 316SS
34.	1/2" x 1/2" SS PIPE UNION.

एन टी पी सी NTPC

N T P C LIMITED
(A GOVERNMENT OF INDIA ENTERPRISE)
ENGINEERING DIVISION

PROJECT: TYPICAL THERMAL POWER PROJECT

TITLE: INSTRUMENT INSTALLATION DIAGRAM
DIFF. PRESS.MEASUREMENT (LIQUID, OIL, AIR/GAS SERVICE)

REV.NO.	DESCRIPTION	DRAWN	DESIGN	CHKD.	M	E	C	C&d	ARCH.	APPD	DATE
A	FIRST ISSUE							T.G.			21.08.12

CLEARED BY

SIZE	SCALE	DRG. NO.	REV. NO.
A3	N.T.S.	0000-999-POI-A-030	A

Estelar

CABLE INTERCONNECTION AND TERMINATION PHILOSOPHY

Estelar

5.00.00 **INSTRUMENTATION CABLE INTERCONNECTION AND TERMINATION PHILOSOPHY**

The cable interconnection philosophy to be adopted shall be such that extensive grouping of signals by large scale use of field mounted Group Junction Boxes (JBs) at strategic locations (where large concentration of signals are available, e.g. valves limit & torque switches, switchgear) is done and consequently cable with higher number of pairs are extensively used. The details of termination to be followed are mentioned in the given Table A.

TABLE A: CABLE TERMINATION TO BE FOLLOWED

Application		Type Of Termination		Type Of Cable
FROM (A)	**TO (B)**	**END A**	**END B**	
Valves/dampers drives (Integral Junction box)	Marshalling / Marshalling – cum Termination Cubicle / local group JB	Plug in connector	Post mount cage clamp type.	G
Transmitters, Process Actuated switches mounted in LIE/LIR	Integral Junction box of LIE/LIR	Plug in connector	Cage clamp (Rail mount) type.	F,G
RTD heads	Local junction box	Plug in connector	Cage clamp (Rail mount) type.	F
Thermocouple	Local junction box / CJC box (if applicable)	Plug in connector	Cage clamp (Rail mount) type.	A, B, C*
Other Field mounted Instrument	Local JB / Group JB	Plug in connector	Cage clamp (Rail mount) type.	F,G
RTD	Temperature transmitter	Plug in connector	Screwed, Cage clamp type	F
Thermocouple	Temperature transmitter	Plug in connector	Screwed, Cage clamp type	A, B, C*
Local Junction box, Temperature Transmitter, Int. Junction box of LIE/ LIR/ MCC/SWGR	Group JB	Cage clamp (Rail mount) type.	Cage clamp (Rail mount) type.	F,G

Estelar

Application		Type Of Termination		Type Of Cable
FROM (A)	TO (B)	END A	END B	
Local Junction box, Temperature Transmitter, Int. Junction box of LIE/ LIR/ Group JB / MCC/SWGR	Marshalling / Marshalling – cum Termination Cubicle	Cage clamp (Rail mount) type.	Cage clamp (Post mounted) type.	F,G
Marshalling cubicle/ Termination Cabinet	Electronic system cabinet	Cage clamp (Post mounted) type.	Plug-in connector / other system as per Mfr.'s Standard	Internal wiring
Marshalling/ Termination System Cabinets	UCD mounted equipments	Cage clamp (Post mounted) type.	Plug in connector / Cage clamp type (rail mounted).	F,G (with plug-in connect or at one end)
DDCMIS/PLC cabinets	PC, Printers etc.	Plug in connector	Plug in connector	Mfr.'s Standar d

Notes

1 Normally 10% spare cores shall be provided when the numbers of pairs of cables are more than four pairs, except for pre-fabricated cables which shall be as per manufacturer's standard.

2 For analog signals, individual pair shielding & overall shielding & for Binary signals, only overall shielding of instrumentation cables shall be provided.

3 * For high temperature applications only.

4 . For connection between field/JB and DDCMIS marshalling cabinet

Minimum 4 pair instrumentation cable shall be used.

5 All the spare cores of instrumentation cable have to be terminated in Marshalling cabinets/ DCS panel end.

6 Not used.

6.00.00 TERMINAL BLOCKS

6.01.00 All terminal blocks shall be rail mounted/post mounted, cage clamp type with high quality non-flammable insulating material of melamine suitable for working temperature of 105 deg. C. The terminal blocks in field mounted junction boxes, temperature transmitters, instrument enclosures/racks, etc., shall be suitable for cage clamp connections. The terminal blocks in Control Equipment Room logic/termination/marshalling cubicles shall be suitable for post

Estelar

mounted cage clamp connection at the field input end. The exact type of terminal blocks to be provided by the Bidder and the technical details of the same including width etc. shall be subject to Employer's approval.

6.02.00 All the terminal blocks shall be provided complete with all required accessories including assembly rail, locking pin and section, end brackets, partitions, small partitions, transparent covers, support brackets, distance sleeves, warning label, marking, etc.

6.03.00 The marking on terminal strips shall correspond to the terminal numbering on wiring diagrams. At least 20% spare unused terminals shall be provided everywhere including local junction boxes, instrument racks/enclosures, termination/marshalling cabinets, etc. All terminal blocks shall be numbered for identification and grouped according to the function. Engraved labels shall be provided on the terminal blocks.

6.04.00 For terminating each process actuated switches, drive actuators, control valves, Thermocouple, RTD, etc. in Local Junction Boxes, etc, refer Drg no. 0000-999-POI-A-065.

6.05.00 The terminal blocks shall be arranged with at least 100 mm clearance between two sets of terminal blocks and between terminal blocks and junction box walls.

7.00.00 INTERNAL PANELS/ SYSTEM CABINETS WIRING

7.01.00 Internal panel/cabinet wiring shall be of multi-stranded copper conductor with FRLS PVC insulation without shield and outer sheath meeting the requirements of VDE 0815.

7.02.00 All internal wires shall be provided with tag and identification nos. etched on tightly fitted ferules at both ends. All wires directly connected to trip devices shall be distinguished by one additional red colour ferrule.

7.03.00 All external connection shall be made with one wire per termination point. Wires shall not be tapped or spliced between terminal points.

7.04.00 All floor slots of desk/panels/cabinets used for cable entrance shall be provided with removable gasketed gland plates and sealing material. Split type grommets shall be used for prefabricated cables.

7.05.00 All the special tools as may be required for solder less connections shall be provided by Bidder.

7.06.00 Wire sizes to be utilised for internal wiring.

(i)	Current (4-20 mA), low voltage signals (48V); Ammeter/Voltmeter circuit, control switches etc. for electrical system.	0.5 Sq.mm.
(ii)	Power supply and internal illumination.	2.5Sq.mm. minimum (shall be as per load requirement.)

8.00.00 INSTRUMENTATION CABLE INSTALLATION AND ROUTING

8.01.00 All cables assigned to a particular duct/conduit shall be grouped and pulled in simultaneously using cable grips and suitable lubricants. Cables removed from one duct/conduit shall not be reused without approval of Employer.

Estelar

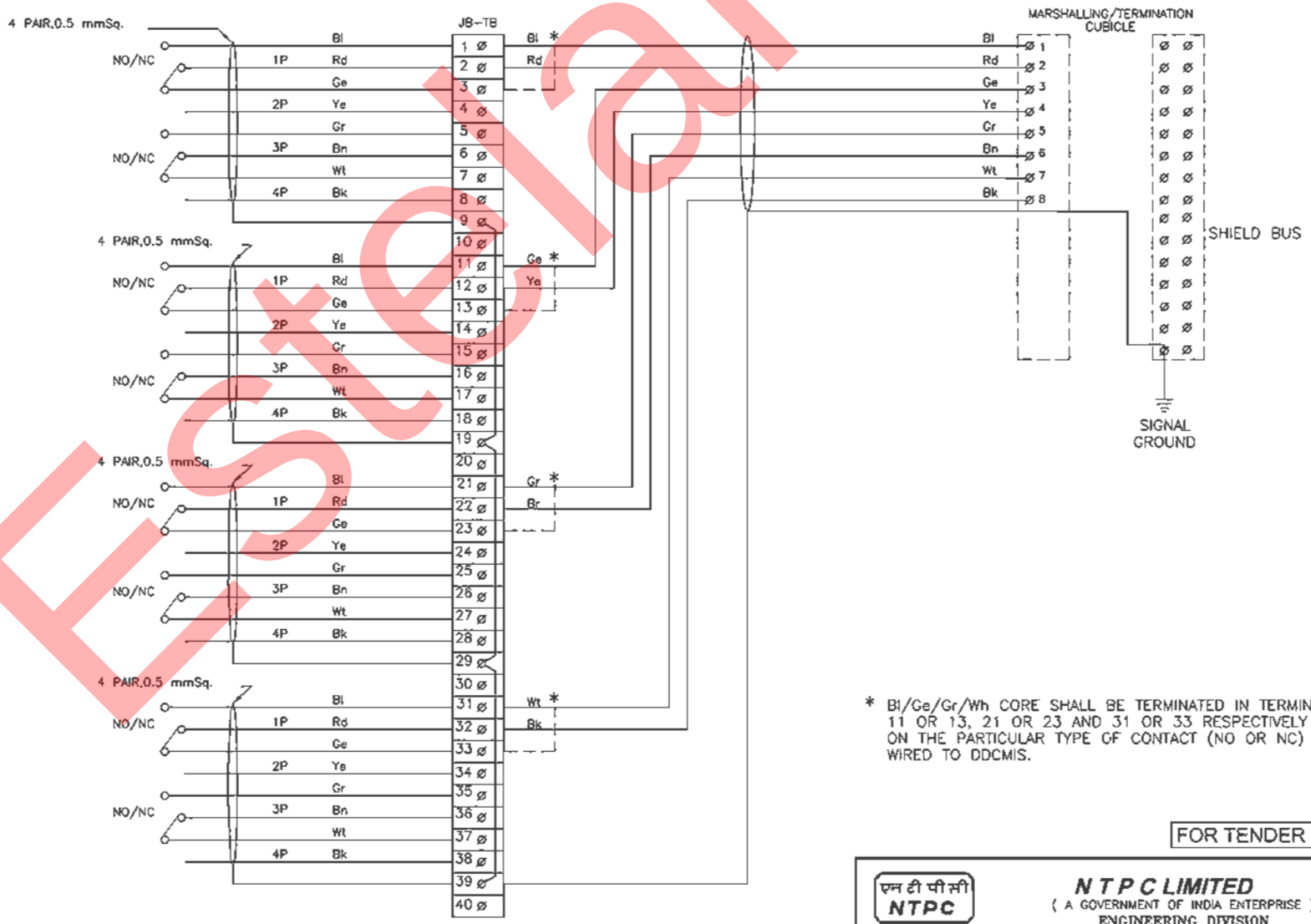

* Bl/Ge/Gr/Wh CORE SHALL BE TERMINATED IN TERMINAL 1 OR 3, 11 OR 13, 21 OR 23 AND 31 OR 33 RESPECTIVELY DEPENDING ON THE PARTICULAR TYPE OF CONTACT (NO OR NC) IS TO BE WIRED TO DDCMIS.

FOR TENDER PURPOSE ONLY

एन टी पी सी NTPC

N T P C LIMITED
(A GOVERNMENT OF INDIA ENTERPRISE)
ENGINEERING DIVISION

PROJECT: TYPICAL THERMAL POWER PROJECT

TITLE: INTERFACING OF FIELD INSTRUMENTS SWITCH TERMINATION DETAILS NO/NC

REV.NO.	DESCRIPTION	DRAWN	DESIGN	CHKD.	M	E	C	C&d	ARCH.	APPD	DATE
A	FIRST ISSUE										21.08.12

CLEARED BY

SIZE	SCALE	DRG. NO.	REV. NO.
A3	NTS	0000-999-POI-A-065 SH 02 OF 15	A

This document is the property of NATIONAL THERMAL POWER CORPORATION LTD.
No part of this document will be reproduced by any means without the written permission.

Estelar

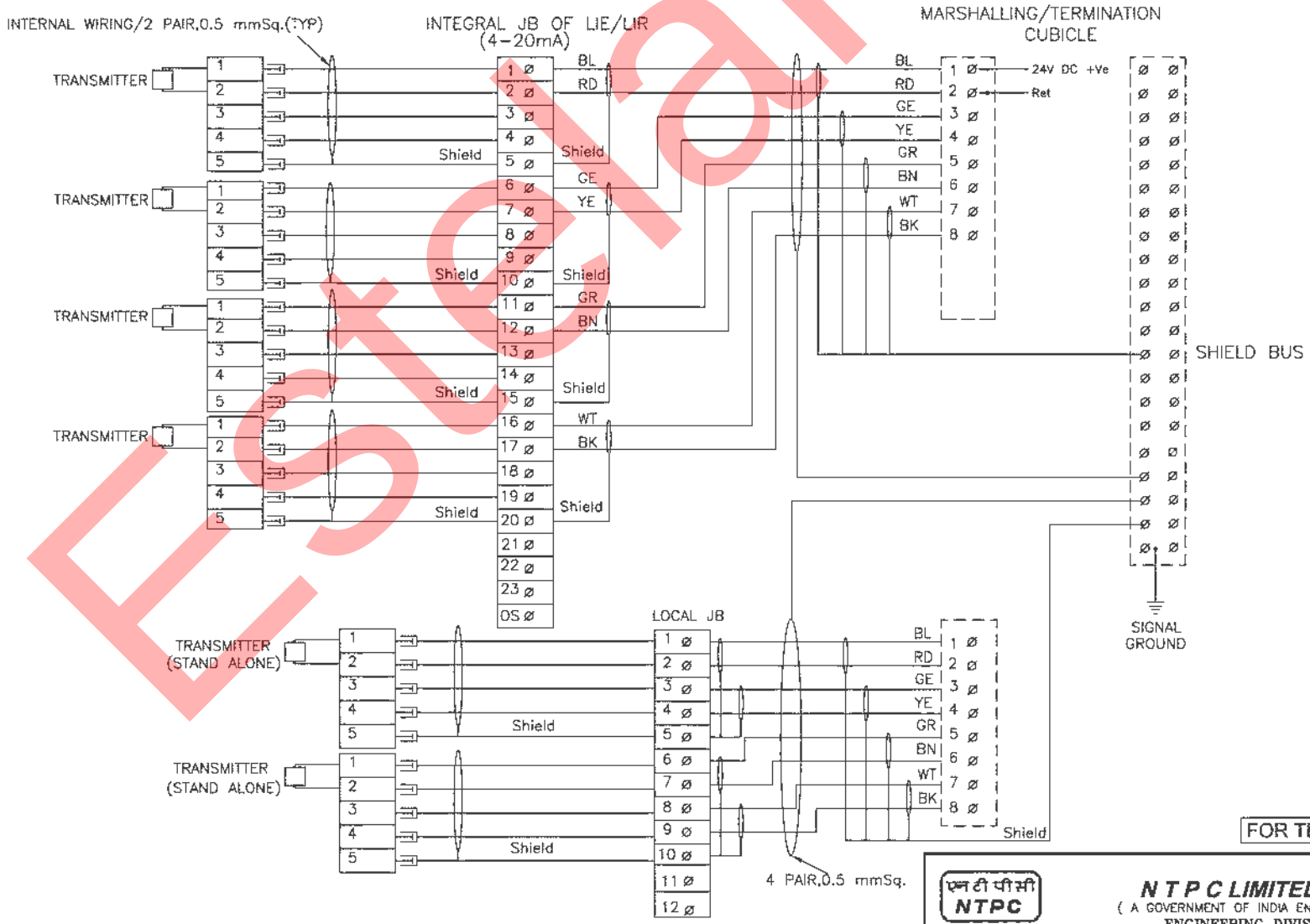

FOR TENDER PURPOSE ONLY

एन टी पी सी NTPC

N T P C LIMITED
(A GOVERNMENT OF INDIA ENTERPRISE)
ENGINEERING DIVISION

PROJECT: TYPICAL THERMAL POWER PROJECT

TITLE: INTERFACING OF FIELD INSTRUMENTS 4-20mA

REV.NO.	DESCRIPTION	DRAWN	DESIGN	CHKD.	M	E	C	C&I	ARCH.	APPD	DATE
B	INTERNAL WIRING FOR LIE/LIR MOUNTED SHOWN WIRING OF STAND ALONE TXTR SHOWN										21.08.12
A	FIRST ISSUE										12.1.05

CLEARED BY

SIZE	SCALE	DRG. NO.	REV NO
A3	NTS	0000-999-POI-A-065 SH 04 OF 15	B

This document is the property of NATIONAL THERMAL POWER CORPORATION LTD.
No part of this document will be reproduced by any means without the written permission.

Estelar

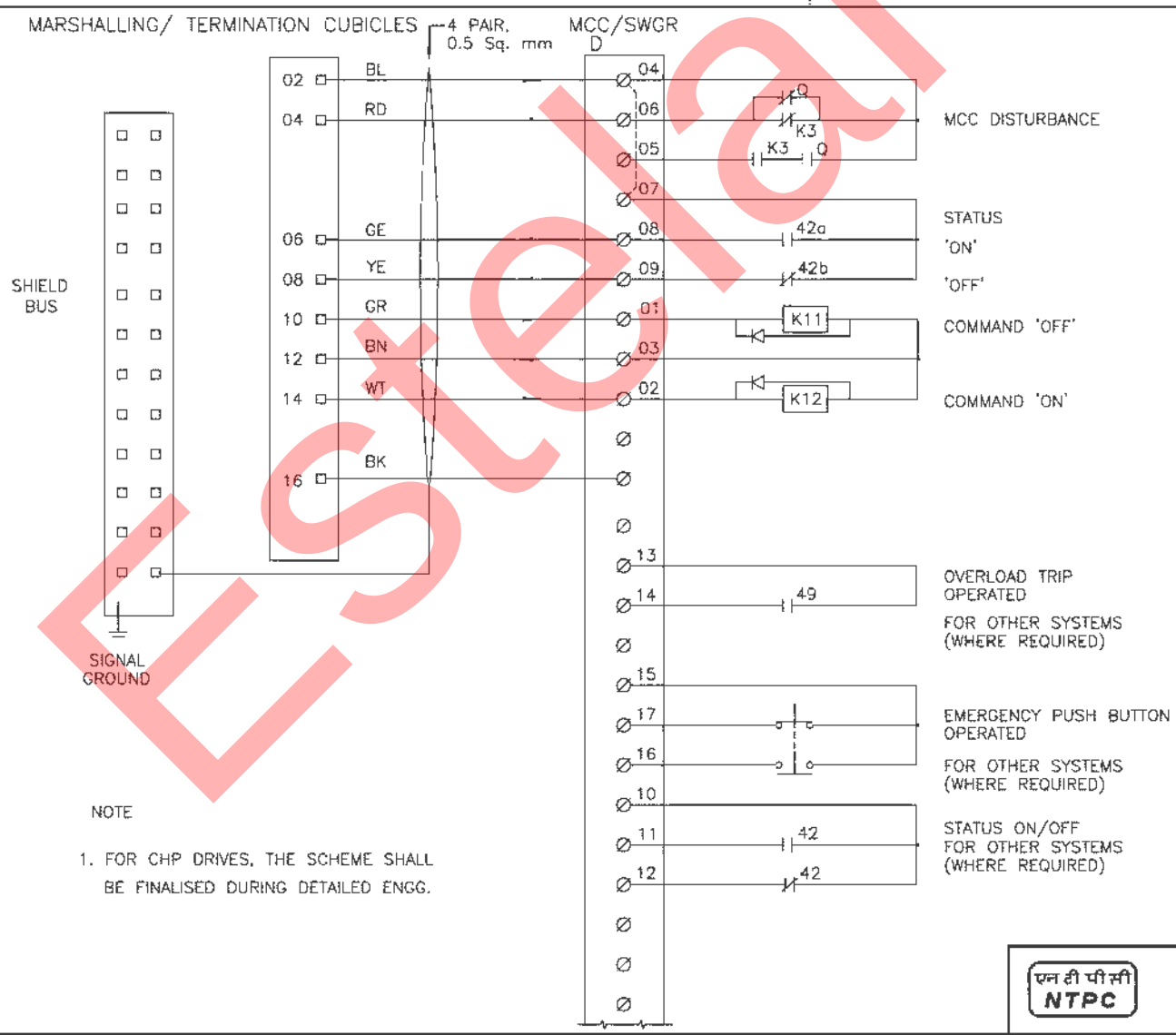

NOTE

1. FOR CHP DRIVES, THE SCHEME SHALL BE FINALISED DURING DETAILED ENGG.

FOR TENDER PURPOSE ONLY

एन टी पी सी NTPC

N T P C LIMITED
(A GOVERNMENT OF INDIA ENTERPRISE)
ENGINEERING DIVISION

PROJECT: TYPICAL THERMAL POWER PROJECT

TITLE: INTERFACING OF FIELD INSTRUMENTS
INTERFACE OF DDCMIS WITH MCC/SWGR/ACTUATOR
(LT MOTORS)

REV.NO.	DESCRIPTION	DRAWN	DESIGN	CHKD.	M	E	C	C&I	ARCH.	APPD	DATE
A	FIRST ISSUE										21.08.12

CLEARED BY

SIZE	SCALE	DRG. NO.	REV NO
A3	NTS	0000-999-POI-A-065 SH 05 OF 15	A

This document is the property of NATIONAL THERMAL POWER CORPORATION LTD.
No part of this document will be reproduced by any means without the written permission.

Estelar

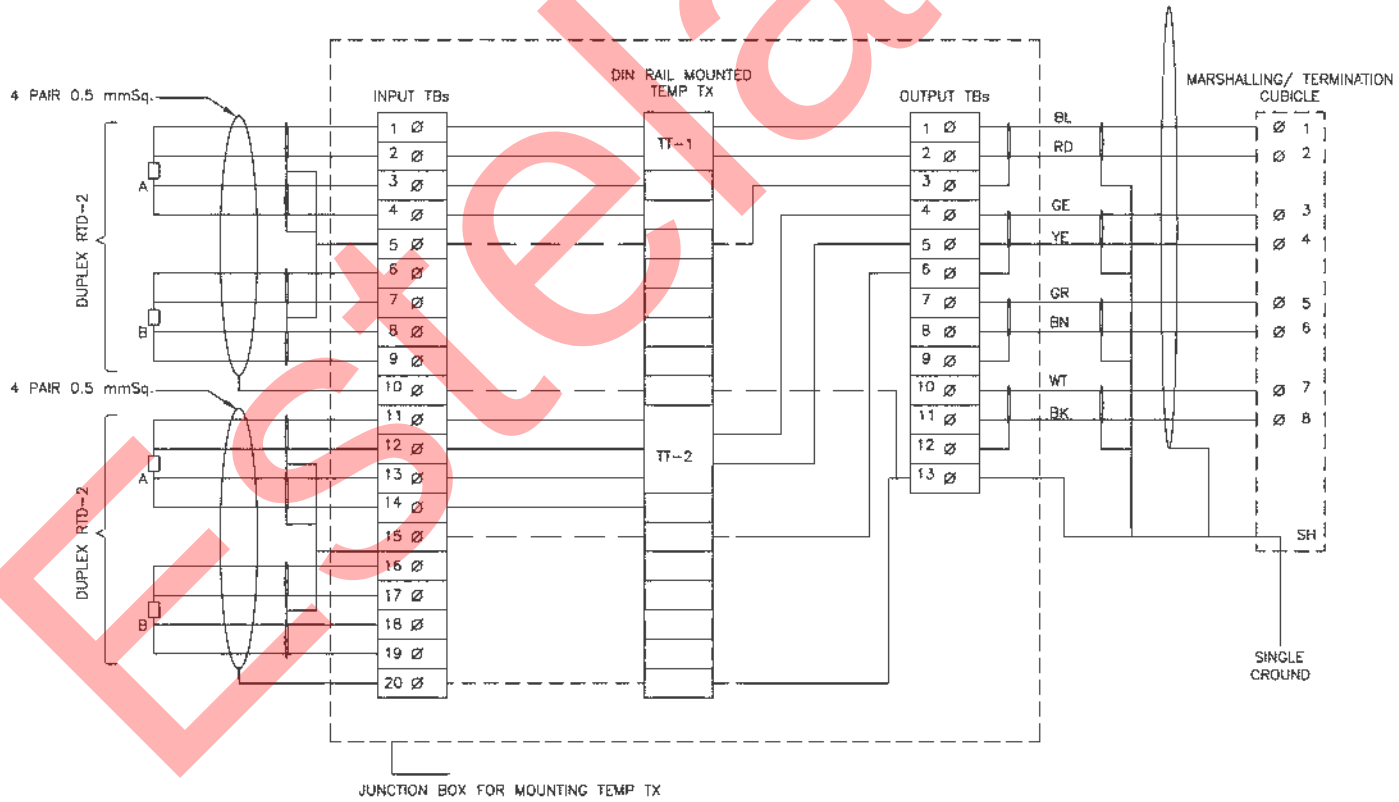

NOTE :- 1) ABOVE IS THE TYP. DRG. MOUNTED TEMP TRANSMITTER FRO T/C APPLICATION. EXACT TYPE OF TEMP TRANMITTERS SHALL BE AS PER PART-A OF SPECIFICATION.

2) THE EXACT GROUPING OF TEMP TXs SHALL BE FINISHED DURING DERAILED ENGG. STAGE.

3) PLEASE NOTE THAT THIS CONFIGURATION IS SHOWN FOR SINGLE INPUT DIN MOUNTED TT. FOR DUAL INPUT TT BOTH THE ELEMENTS OF RTD SHALL BE CONNECTED TO TT THROUGH INPUT TBs.

FOR TENDER PURPOSE ONLY

एन टी पी सी NTPC

N T P C LIMITED
(A GOVERNMENT OF INDIA ENTERPRISE)
ENGINEERING DIVISION

PROJECT: TYPICAL THERMAL POWER PROJECT

TITLE: INTERFACING OF FIELD INSTRUMENTS
TYPICAL RTD CONNECTION WITH TEMP TRANSMITTERS IN JBs

REV.NO.	DESCRIPTION	DRAWN	DESIGN	CHKD.	M	E	C	C&I	ARCH.	APPD	DATE
A	FIRST ISSUE										21.08.12

CLEARED BY

SIZE	SCALE	DRG. NO.	REV NO
A3	NTS	0000-999-POI-A-065 SH 06 OF 15	A

This document is the property of NATIONAL THERMAL POWER CORPORATION LTD.
No part of this document will be reproduced by any means without the written permission.

Estelar

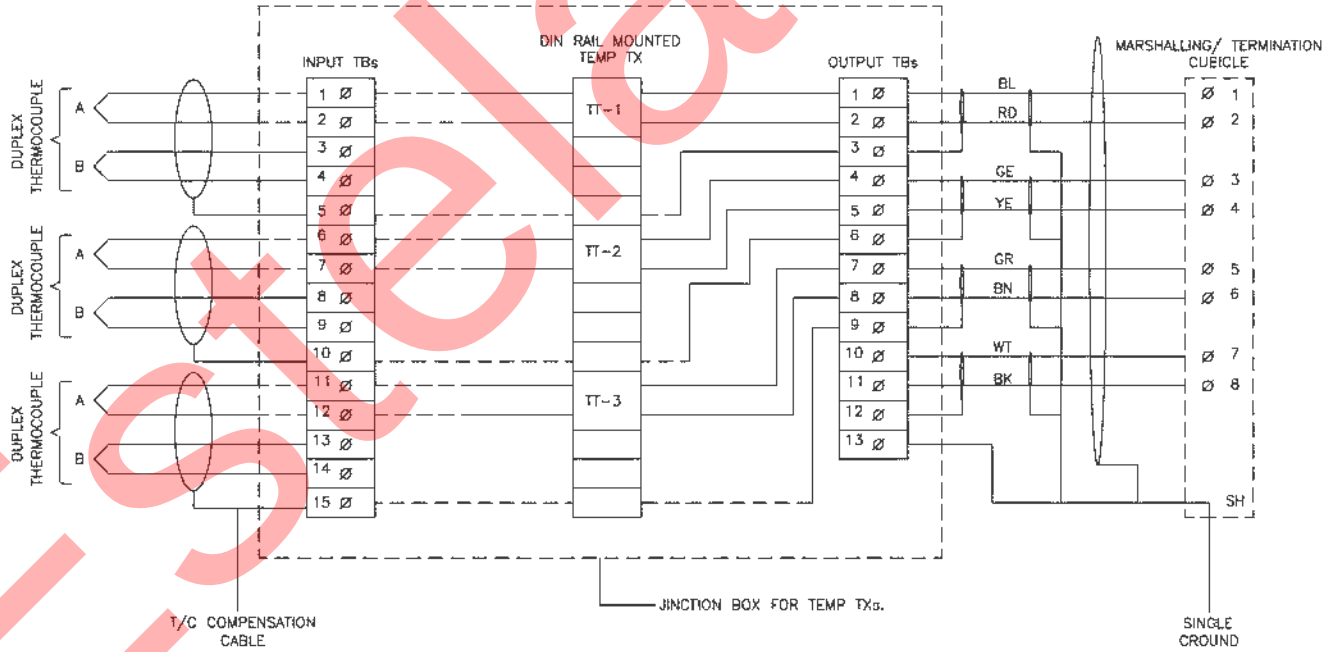

NOTE :- 1) ABOVE IS THE TYP. DRG. MOUNTED TEMP TRANSMITTER FRO T/C APPLICATION. EXACT TYPE OF TEMP TRANMITTERS SHALL BE AS PER PART–A OF SPECIFICATION.

2) THE EXACT GROUPING OF TEMP TXs SHALL BE FINISHED DURING DERAILED ENGG. STAGE.

3) AFTER GLADDING OF T/C CABLES ON JB. THE CABLE PAIR OF FIRST ELEMENT WILL BE DIRECTLY CONNECTED TO TT AND THE CABLE PAIR OF SECOND ELEMENT SHALL BE WIRED TO INPUT TBs FOR FUTURE USE.

4) PLEASE NOTE THAT THIS CONFIGURATION IS SHOWN FOR SINGLE NPUT DIN RAIL MOUNTED TT. FOR DUAL INPUT TT BOTH THE ELEMENT OF T/C SHALL BE CONNECTED DIRECTLY TO TT WITHOUT INPUT TBs. HOWEVER 5 NOS OF INPUTS TBs ARE TO PROVIDED FOR EACH T/C FOR FUTURE USE.

FOR TENDER PURPOSE ONLY

एन टी पी सी NTPC

N T P C LIMITED
(A GOVERNMENT OF INDIA ENTERPRISE)
ENGINEERING DIVISION

PROJECT: TYPICAL THERMAL POWER PROJECT

TITLE: INTERFACING OF FIELD INSTRUMENTS
TYPICAL T/C CONNECTION WITH TEMP TXs IN JBs

REV.NO.	DESCRIPTION	DRAWN	DESIGN	CHKD.	M	E	C	C&I	ARCH.	APPD	DATE
B	CABLING OF 2ND RTD CHANGED TO MATCH COLOR CODE										21.08.12
A	FIRST ISSUE										29.04.08

CLEARED BY

SIZE	SCALE	DRG. NO.	REV NO
A3	NTS	0000-999-POI-A-065 SH 15 OF 15	B

This document is the property of NATIONAL THERMAL POWER CORPORATION LTD.
No part of this document will be reproduced by any means without the written permission.

Estelar

`

CODES AND STANDARDS

Estelar

Estelar

REFERENCE CODES AND STANDARDS FOR CONTROL AND INSTRUMENTATION

The design, manufacture, inspection, testing & installation of all equipment and system covered under this specification shall conform to the latest editions of codes and standards mentioned below and all other applicable VDE, IEEE, ANSI, ASME, NEC, NEMA, ISA AND Indian Standards and their equivalents.

Temperature Measurements

1. Instrument and apparatus for temperature measurement - ASME PTC 19.3 (1974).
2. Temperature measurement - Thermocouples ANSI MC 96.1 - 1982.
3. Temperature measuremnet by electrical Resistance thermometers - IS:2806.
4. Thermometer - element - Platinum resistance - IS:2848.

Pressure Measurements

1. a) Instruments and apparatus for pressure measurement - ASME PTC 19.2 (1964).

   b) Electonic transmitters BS:6447.
2. Bourdon tube pressure and vacuum gauges - IS:3624 - 1966.
3. Process operated switch devices (Pr. Switch) BS-6134.

Flow Measurements

Instruments and apparatus for flow measurements - ASME PTC 19.5 (1972) Interim supplement, Part-II.

Measurement of fluid flow in closed conduits - BS-1042.

Electronic Measuring Instrument & Control Hardware/ Software

1. Automatic null balancing electrical measuring instruments - ANSI C 39.4 (Rev. 1973): IS:9319.
2. Safety requirements for electrical and electronic measuring and controling instrument - ANSI C 39.5 - 1974.
3. Compatability of analog signals for electronic industrial process instruments - ISA - S 50.1 (1982) ANSI MC 12.1 - 1975.
4. Dynamic response testing of process control instrumentation ISA - S 26 (1968).
5. Surge Withstand Capability (SWC) tests - ANSI C 37.90 a/IEEE-472 or suitable class of IEC-255-4 equivalent to ANSI C37.90a/IEEE-472.
6. Printed circuit boards - IPC TM - 650, IEC 326 C.
7. General requirement and tests for printed wiring boards - IS 7405 (Part-I) 1973.
8. Edge socket connectors - IEC 130-11.
9. Requirements and methods of testing of wire wrap terminations DIN 41611 Part-2.
10. Dimensions of attachment plugs & receptacles - ANSI C 73 - 1973 (Supplement ANSI C 73 a - 1980).
11. Direct acting electrical indicating instrument - IS:1248 - 1968 (R).
12. Standard Digital Interface for Programmable Instrumentation - IEEE-488.2 - 1990.
13. Information Processing Systems - Local Area Networks - Part 2 : Logical Link Control - IEEE-802.2 - 1989.
14. Standard for Local Area Networks : Carrier Sense Multiple Access with Collision Detection - IEEE-802.3 - 1985.
15. Supplements A, B, C and E to Carrier Sense Multiple Access with Collision Detection - IEEE-802.3 - 1988.

Estelar

16. Standard for Local Area Networks : Token - Passing Bus Access Method - IEEE-802.4 - 1985.

17. Standard for Local Area Networks : Token - Ring Access Method and Physical Layer Specification - IEEE-802.5 - 1985.

18. IEEE Guide to Software Requirements Specifications - IEEE-830 - 1984.

19. Hardware Testing of Digital Process Computers - ISA RP55.1 - 1983.

20. Electromagnetic Susceptibility of Process Control Instrumentation - SAMA PMC 33.1 - 1978.

21. Interface Between the Data Terminal Equipment and Data Circuit - Terminating Equipment Employing Serial Binary Data Interchange - EIA-232-D-1987.

22. Electromagnetic Compatibility for Industrial Process Measurement and Control Equipment, Part 3 : Radiated Electromagnetic Field Requirements - IEC 801-3-1984.

Instrument Switches and Contact

1. Contact rating - AC services NEMA ICS 2 - 1978 (with revision through May 1983), Part - 2-125, A6000.

2. Contact rating - DC services NEMA ICS 2-1978 Part-2 125, N600.

Enclosures

1. Type of Enclosures - NEMA ICS Part - 6 - 1978 (with Rev. 1 4/80) through 110.22 (Type 4 to 13).

2. Racks, panels and associated equipment - EIA : RS - 310 C- 1983 (ANSI C 83.9 - 1972).

3. Protection class for Enclosures, cabinets, control panels & desks - IS:2147 - 1962.

Apparatus, enclosures and installation practices in hazardous area

1. Classification of hazardous area - NFPA 70 - 1984, Article 500.

2. Electrical Instruments in hazardous dust location - ISA - 512.11, 1973.

3. Instrinsically safe apparatus - NFPA 493 1978.

4. Purged and pressurised enclosure for electrical equipment in hazardous location - NFPA 496-1982.

5. Enclosures for Industrial Controls and Systems - NEMA IS 1.1 - 1977.

Estelar

Sampling System

1. Stainless steel material of tubing and valves for sampling system - ASTMA 296-82, Grade 7 P 316.
2. Submerged helical coil heat exchangers for sample coolers ASTM D11 92-1977.
3. Water and steam in power cycle - ASME PTC 19.11.
4. Standard methods of sampling system - ASTM D 1066-99.

Annunciators

1. Specifications and guides for the use of general purpose annunciators - ISA S 19.1, 1979.
2. Surge withstand capability tests - ANSI C 37.90a - 1989/IEEE-472 or suitable class of IEC 255-4 equivalent to ANSI C37.90a 1989/IEEE-472
3. Damp heat cycling test - IS:2106
4. Specification for Electromagnetic Susceptibility - SAMA DMC 33, 1/78

Protections

1. Relays and relay system associated with electric power apparatus. ANSI C 37.90, 1 - 1989.
2. General requirements & tests for switching devices for control and auxiliary circuits including contactor relays - IS:6875 (Part-I) - 1973.
3. Turbine water damage prevention - ASME TDP-1-1980.
4. Boiler safety interlocks - NFPA 85 - 2011 or latest version.

UPS System

1. Practices and requirements for semi-conductor power rectifiers - ANSI C 34.2, 1973.
2. Relays and relays system associated with electrical power apparatus - ANSI C 3.90 - 1983.
3. Surge withstand capability test - ANSI C 37.90 1 -1989.
4. Performance testing of UPS - IEC 146.
5. Stationary cells & Batteries Lead Acid type (with tubular positive plates) specification IS-1651-1991.

Estelar

6. Recommended practice for sizing large lead storage batteries for generating stations & sub-stations - IEEE-485-1985.

7. Printed Circuit Board - IPC TM 650, IEC 326C.

8. General Requirements & tests for printed wiring boards, IS:7405 (Part-I) 1973.

Control Valves

1. Control valve sizing - Compressible & Incompressible fluids - ISA S 75.01-1985.

2. Face to face dimensions of control valves - ANSI B 16.00 - 1973.

3. ISA Hand Book of Control Valves - (ISBN : B: 1047-087664-234-2).

4. Codes for pressure piping - ANSI B 31.1

5. Control Valve leak class - ISA RP 39.6

Process Connection & Piping

1. Codes for pressure piping "power piping" - ANSI B 31.1.

2. Seamless carbon steel pipe ASTM - A - 106.

3. Forged & Rolled Alloy steel pipe flanges, forged fittings and valves and parts - ASTM - A - 182.

4. Material for socket welded fittings - ASTM - A - 105.

5. Seamless ferritic alloy steep pipe - ASTM - A - 335.

6. Pipe fittings of wrought carbon steel and alloy steel - ASTM - A - 234.

7. Composition bronze of ounce metal castings - ASTM - B - 62.

8. Seamless Copper tube, bright annealed - ASTM - B - 168.

9. Seamless copper tube - ASTM - B - 75.

10. Dimension of fittings - ANSI - B - 16.11.

11. Valves flanged and butt welding ends - ANSI - B - 16.34.

Instrument Tubing

1. Seamless carbon steel pipe - ASTM - A 106.

2. Material of socketweld fittings - ASTM - A105.

3. Dimensions of fittings - ANSI - B - 16.11.

Estelar

4. Code for pressure piping, welding, hydrostatic testing - ANSI B 31.1.

Cables

1. Thermocouples extension wires/cables - ANSI MC 96.1 - 1992.
2. Requirements for copper conductor-Wiring cables for telecommunications & information processing system - VDE:0815.
3. Colour coding of single or multi-pair cables - ICEA - S - 61-402 (third edition) NEMA WCS - 1979 with revisions thorugh 2/83.
4. Insulation & Sheathing compounds for cables : VDE 0207 (Part-4, 5 & 6).
5. Guide design and installation of cable systems in power generating stations (insulation, jacket materials) - IEEE Std. 422-1977.
6. Rules for Testing insulated cables and flexible cables : VVDE - 0472
7. Requirements of vertical flame propagation test - IEEE 383 - 1974 (R 1980)
8. Standard specification for tinned soft or annealed copper wire for electrical purpose - ASTM B-33-81.
9. Oxygen index and temperature index test - ASTM D - 2863.
10. Smoke density measurement test - ASTMD - 2843.
11. Acid gas generation test - IEC - 754 - 1.
12. Swedish Chimney test - SEN - 4241475 (F3).
13. Teflon (FEP) insulation & sheath test - ASTMD - 2116.
14. Thermocouple compensating cables - Testing requirements & sampling plan IS:8784.
15. PVC insulated electric cables for working voltage upto and including 1100 V - IS:1554 (Part-I).

Cable Trays, Conduits

1. Guide for design and installation of cable systems in power generating staiton (Cable trays, support systems, conduits) - IEEE Std. 422, 1977, NEMA VE-1 1979, NFPA 70-1984.
2. -do- Test Standards. NEMA VE-1-1979.
3. Zinc coating "hot dip" on assembled products for galvanising of carbon steel cable trays - ASTMA - 386-78.

Estelar

Public Address System

1. Specifications for lod speakers - IS:7741 (Part-I, II and III)
2. Code of safety requirement for electric mains operated audio amplifiers - IS:1301
3. Specification for Public Address Amplifiers - IS:10426.
4. Code of practice for outdoor installation of PA system - IS:1982.
5. Code of practice for installation for indoor amplifying and sound distribution system - IS:1881.
6. Basic environmental testing procedures for electronic and electrical items - IS:9000.
7. Characteristics and methods of measurements for sound system equipment - IS:9302
8. Code of practice of electrical wiring installations (System voltage not exceeding 650 volts) - IS:732
9. Rigid steel conduits for electric wiring - IS:9537 (Part-I and II)
10. Fittings for rigid steel conduits for electrical wiring - IS:2667
11. Degree of protection provided by enclosure for low voltage switchgear and control gear - IS:2147.

Vibration Monitoring System

1. API 670 - 1994
2. BS : 4675 Part-2

Estelar

ANNEXURE-I

LIST OF MAKES OF SUB-VENDOR ITEMS

Estelar

बी एच ई एल BHEL

SUB VENDOR LIST & INSPECTION CATEGORISATION (ANNEXURE- II)

COMPRESSED AIR SYSTEM

SL No	Item	QP / Insp.Cat	Proposed Subvendor	Place of Manufacturer	Technical Limit	Remarks
1	AIR DRYING PLANT (HOC TYPE)	I	ACIL	BELGIUM	ROTARY DRUM	Testing at Atlas Copco Works Pune
			MELLCON	Delhi	Twin Tower type	
			DELAIR	Gurgaon	Twin Tower type	
			SUMMITS	Coimbtore	Twin Tower type	
			Shakcot	Noida	Twin Tower type	
2	AIR DRYING PLANT (REFRIGERANT TYPE)	I	ACIL	BELGIUM		
			MELLCON	Delhi		
			DELAIR	Gurgaon		
			SUMMITS	Coimbtore		
			Shakcot	Noida		
			Savroe	Germany		
			MTA	Italy		
			Dominic Hunter	U.K		
3	MS/GI Pipes –ERW IS 1239 / IS 3589	III	SAIL	Rourkela		1) Quantity < 200 meters Assorted sizes) 2) Material will be accepted on the basis of Main contractor COC supported by manufacturer TC as per relevant Code. In addition to above main contractor will certify availability of correlated identification marks on pipe wrt Manf TC and will also certify that pipes are free from rust
			Jindal	Ghaziabad/Hissar	upto 350NB	
			Surya Roshni	Bahadurgarh	upto 400 NB	
			Tata IS 1239 Pipes	Jamshedpur	upto 150NB	
			Maharshtra seamless IS 3589	Raigad	200 to 500 NB	
			PSL	Chennai/Vizag/Kutch/Daman	Spiral Weld SAW as per IS 3589	
			Lalit Profile	Thane	Spiral Weld SAW as per IS 3589	
			Samshi Pipes Industries	Vadodara	Spiral Weld SAW as per IS 3589	
			Mukut Pipes	Rajpura	Longitudinal SAW (Single side weld) as per IS 3589	
			Indus Tubes	G B Nagar	Upto 300 NB ERW Pipes as per IS 1239/3589	
			Mann Ind	Indore	Spiral Weld SAW as per IS 3589	
			Surendra Engg	Rajpura	Spiral Weld SAW as per IS 3589	

Estelar

07.07.15
(Harish Kumar)

SL No	Item	QP / Insp.Cat	Proposed Subvendor	Place of Manufacturer	Technical Limit	Remarks
			Pratibha Pipes & Structure Pvt Ltd	Thane	Spiral Weld SAW as per IS 3589	
			JCO Gas Pipe	Chindwara	Spiral Weld SAW as per IS 3589	
			Nukat Tanks and Vessels	Tarapur	Longitudinal SAW (Single side weld) as per IS 3589	
			DADU Pipes	Sikrandrabad	Upto 300 NB ERW Pipes as per IS 1239/3589	
			Good Luck Tubes	Sikandrabad	Upto 300 NB	
			Advance Steel Tubes	Sahibabad	Upto 300 NB	
			APL APPOLO Tubes	Sikandrabad	Upto 300 NB	
			Hi Tech Pipes	Sikandrabad	Upto 300 NB	
			Ratnamani	Kutch/Ahmedabad/ Chhatral	Upto 400 NB ERW Pipes as per IS 3589 and SAW as per IS 3589	
			Welspun	Anjar/Bharuch	Upto 400 NB ERW Pipes as per IS 1239/3589 and SAW as per IS 3589	
4	Forged/Formed fittings	III	EBY	Taloja		
			Siddarth & Gautam	Faridabad		
			Pipefit	Baroda		
			MS Fittings	Kolkata		
			Tube Products	Baroda		
			Bharat Forge	Pune		
			NL Hazra	Kolkata		
5	Ball Valve	I	Precision Engg	Nasik	upto 400NB 150 class	
			Microfinish Valves Ltd	Hubli		
			Weir BDK engg Industries	NEW DELHI		
			Flow chem. Industries	Ahemdabad	upto 50 NB 800 Class: 350NB 150 class	
			Audco	Chennai		
			Akay India	Hubli	upto 50NB 800 class	
			A V Valves	Agra		
			Asian Industrial valves & Instruments Ltd.	Chennai		
			ATAM Valves	Jalandhar	(1) BALL VALVES: FCS/FSS - 1/2" to 2" #800 & CCS/CSS - 2.1/2" to 4" # 150 (2) BALL VALVES: GUN METAL VALVES SIZE 15 NB TO 80 NB - UPTO PN16.0	
			GM ENGINEERING	Rajkot		
			Hawa Valves (India) Pvt. Ltd.	Navi Mumbai	Size up to 2" & #800 with MOC as FCS & FSS and for size from 65 NB to 150 NB & #150 with MOC as CCS and CSS.	

07.07.15
(Harish Kumar)

Estelar