FIRST ANGLE PROJECTION

(ALL DIMENSIONS ARE IN mm)

DRG. NO. 1-381-21-02641 SHT. 1 OF 1

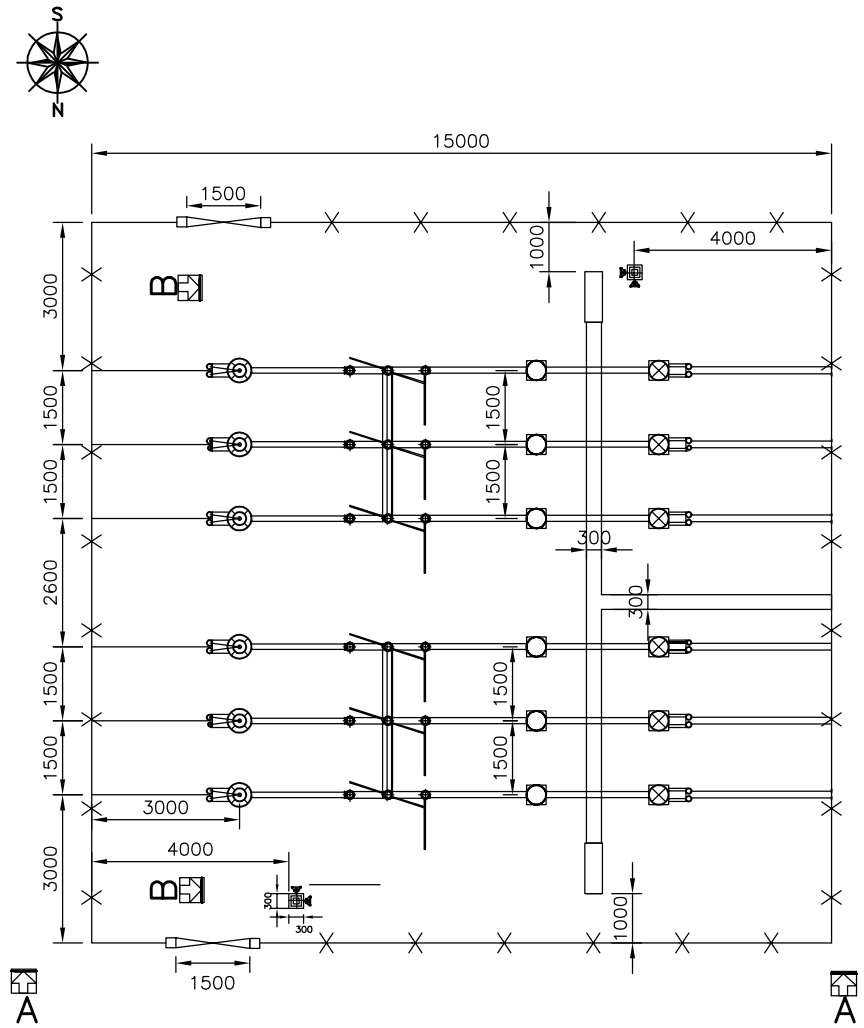

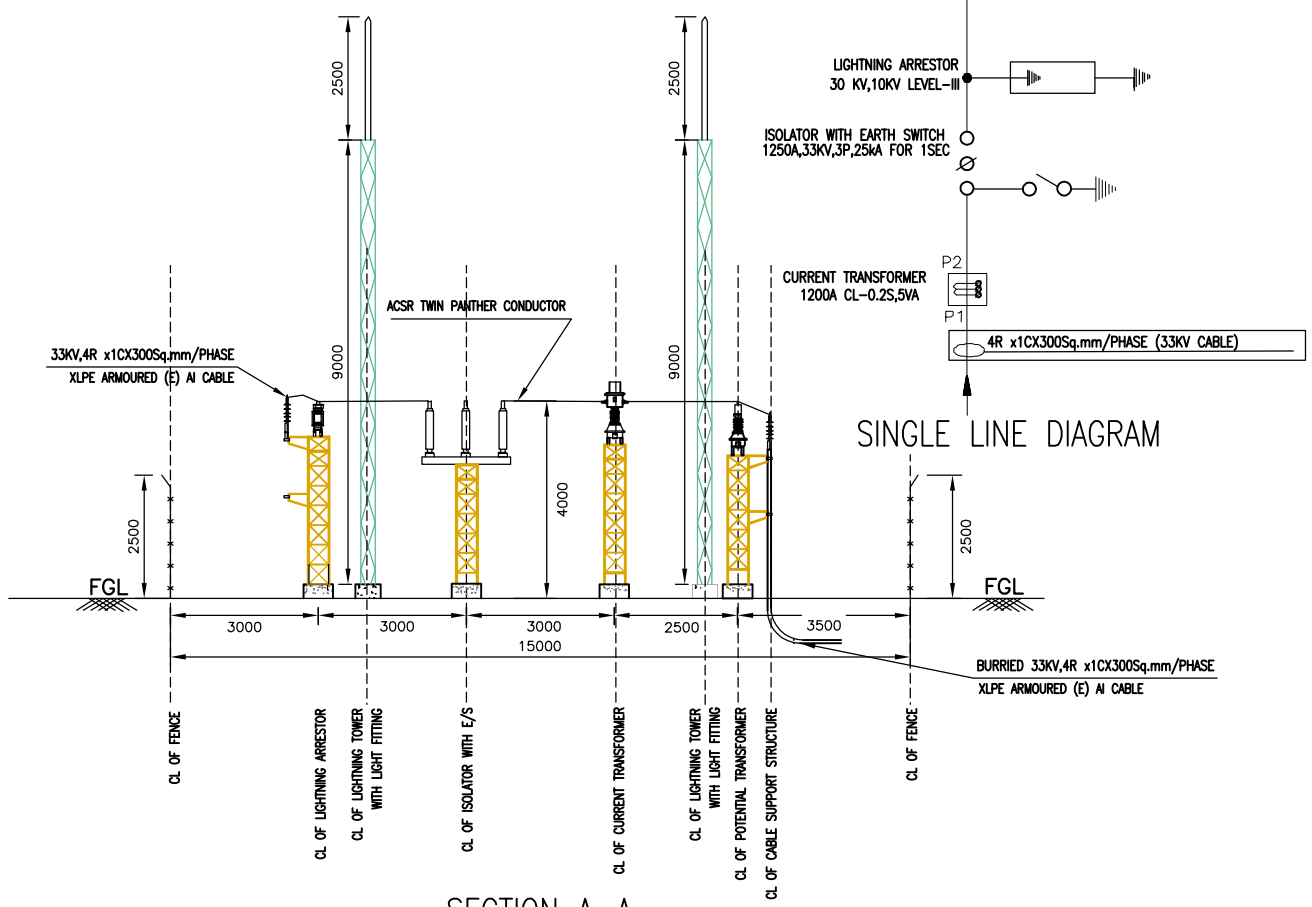

SECTION A–A

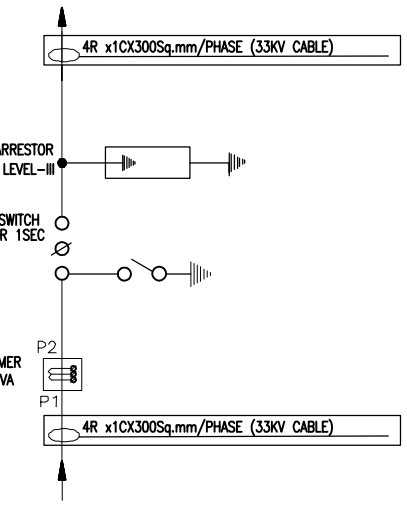

SINGLE LINE DIAGRAM

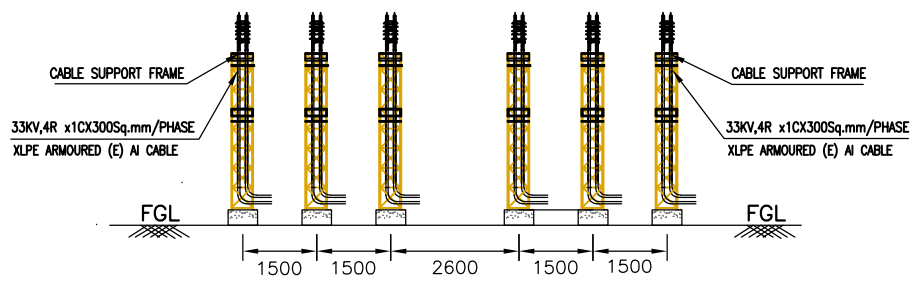

SECTION B–B

SITE PARAMETERS :–

1. DESIGN VOLTAGE LEVEL :–
   - (A) NOMINAL SYSTEM VOLTAGE – 33KV
   - (B) HIGHEST SYSTEM VOLTAGE – 36KV
   - (C) RATED FREQUENCY – 50HZ
   - (D) FULL WAVE IMPULSE WITHSTAND VOLTAGE – 170KV
   - (E) ONE MINUTE POWER FREQUENCY – 70KV
   - (F) MINIMUM CREEPAGE DISTANCE – 25MM/KV
2. MINIMUM CLEARANCE :–
   - (A) PHASE TO PHASE – 320MM
   - (B) PHASE TO EARTH – 320MM
   - (C) GROUND CLEARANCE – 3700MM
   - (D) SAFETY CLEARANCE – 2800MM
3. ADOPTED DISTANCE :–
   - (A) PHASE TO PHASE – 1500MM
   - (B) PHASE TO EARTH – 1300MM
   - (C) DESIGN TEMPRATURE – 50 C
   - (D) VOLTAGE VARIATION – 10%

INDICATIVE LAYOUT. FOR TENDER PURPOSE ONLY

KEYPLAN

NOTES:

1. ALL DIMENSION ARE IN MM.
2. EARTHING LAYOUT, LIGHTNING & LIGHTNING PROTECTION LAYOUT SHALL BE SUBMITTED IN SEPARATE DRAWING.
3. FOUNDATION LAYOUT WITH DETAILS OD CIVIL COMPONENTS FOR MAJOR EQUIPMENTS & SRUCTURES, FENCE & GATE DETAILSSHALL BE SUBMITTED IN SEPARATE DRAWING.
4. THE LAYOUT HAS BEEN PREPARED AS PER COMPATIBLE REC STANDARDS.
5. CHAIN LINK FENCE AS PER SPECIFICATION SHALL BE PROVIDED FOR THE ACTUAL AQUIRED AREA AT SITE.
6. GI STRUCTURE FOR LA,CT,PT,ISOLATOR & LIGHTNING TOWER.
7. THIS IS TYPICAL DRAWING, IT WILL BE FINALIZED AFTER VENDOR CONFIRMATION.

LEGEND:–

- :LIGHTNING ARRESTOR 30KV/10KA,GAPLESS STATION CLASS
- :CURRENT TRANSFORMER 1200A/1A, CLASS–0.2S,5VA
- :CONTROL CABLE TRENCH
- :POTENTIAL TRANSFORMER 33KV/SQRT3/110V/SQRT3 CLASS–0.2
- :ISOLATOR WITH EARTH SWITCH36KV, 1200A,25KA 1SEC
- :GATE
- :ABT METER

REFERENCE DRAWINGS:–

PROJECT : 50MWp SOLAR POWER PLANT (P4 BLOCK)

CUSTOMER : [redacted] NTPC– MANDSAUR MP

CONSULTANT :

BHARAT HEAVY ELECTRICALS LTD.
UNIT : HYDERABAD

	NAME	SIGN.	DATE	NO.OF VAR.
DRN.	AM		20.06.16	N.A.
CHD.	AM		XX.XX.XX	
APPD.	JKP		XX.XX.XX	

REV.	DATE	ALTERED CHD/APPD	REV.	DATE	ALTERED CHD/APPD	REV.	DATE	ALTERED CHD/APPD	REV.	DATE	ALTERED CHD/APPD	REV.	DATE	ALTERED CHD/APPD	REV.	DATE	ALTERED CHD/APPD
ZONE			ZONE			ZONE			ZONE			ZONE			ZONE		

BHEL'S CONSULTANT:

	NAME	SIGN.	DATE
DRN.			
CHD.			
APPD.			

DRG. NO.3–381–21–XXXXX REV. 0P

DEPT. PED	UNTOL. DIMS. GR. g/w/f		SCALE 1:75	WEIGHT (KG) N.A.	REF. TO ASSY. DRG. N.A.	ITEM NO. N.A.	NO.OF ITEMS N.A.
CODE 450							

TITLE: 33KV SWITCHYARD EQUIPMENT LAYOUT

CARD CODE NA

DRAWING NO. 3–381–21–XXXXX REV. 0P

SHT. No 01 NO. OF SHT. 01

THE INFORMATION ON THIS DOCUMENT IS THE PROPERTY OF BHARAT HEAVY ELECTRICALS LIMITED. IT MUST NOT BE USED DIRECTLY OR INDIRECTLY IN ANY WAY DETRIMENTAL TO THE INTEREST OF THE COMPANY

GENERAL DIMENSIONAL LIMITS,FITS & TOLERANCES AS PER HY0230261

COMPUTER FILE NAME | REF. DRG. NO. | SIGN. AND DATE | INVENTORY NO