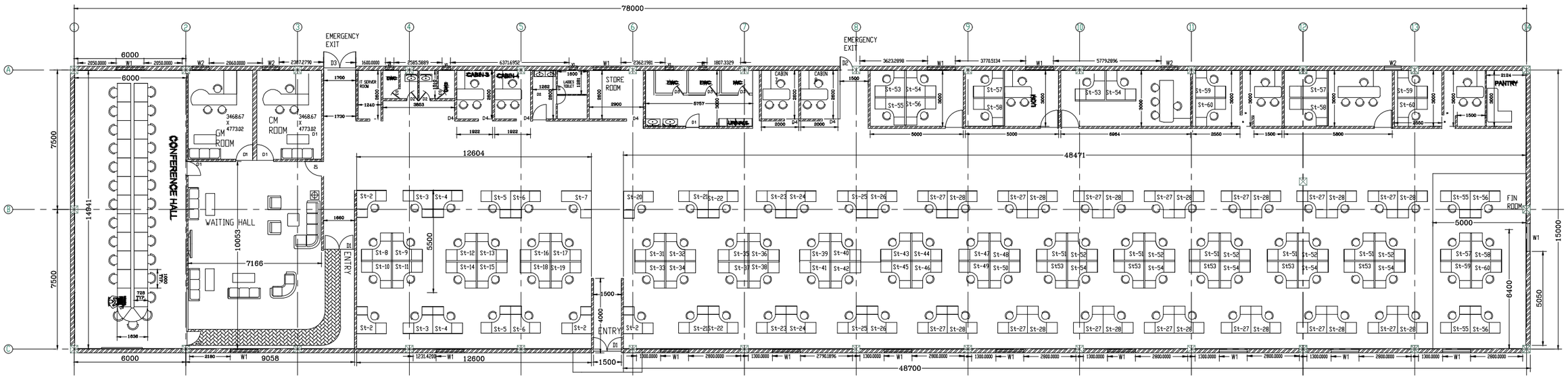

REV.	DATE	ALTD	CHD	APPD	REV.	DATE	ALTD	CHD	APPD	REV.	DATE	ALTD	CHD	APPD	REV.	DATE	ALTD	CHD	APPD	REV.	DATE	ALTD	CHD	APPD

JOB NO.
DRAWN
CONTRACTOR

PROJECT: 2X660 MW KORBA WEST PROJECT

BHARAT HEAVY ELECTRICALS LTD
PSER-CPC
NOIDA (U.P.)

REV.	DESIGN	CHD	APPD
A			
B			
C			

TITLE

MPL	ELEC	C&I	MSE	MAX	DEPT	SCALE –
					DRN	
					DATE	

DRAWING NO.

SHEET 1 OF 1 REV.

FORMAT NO. 4P

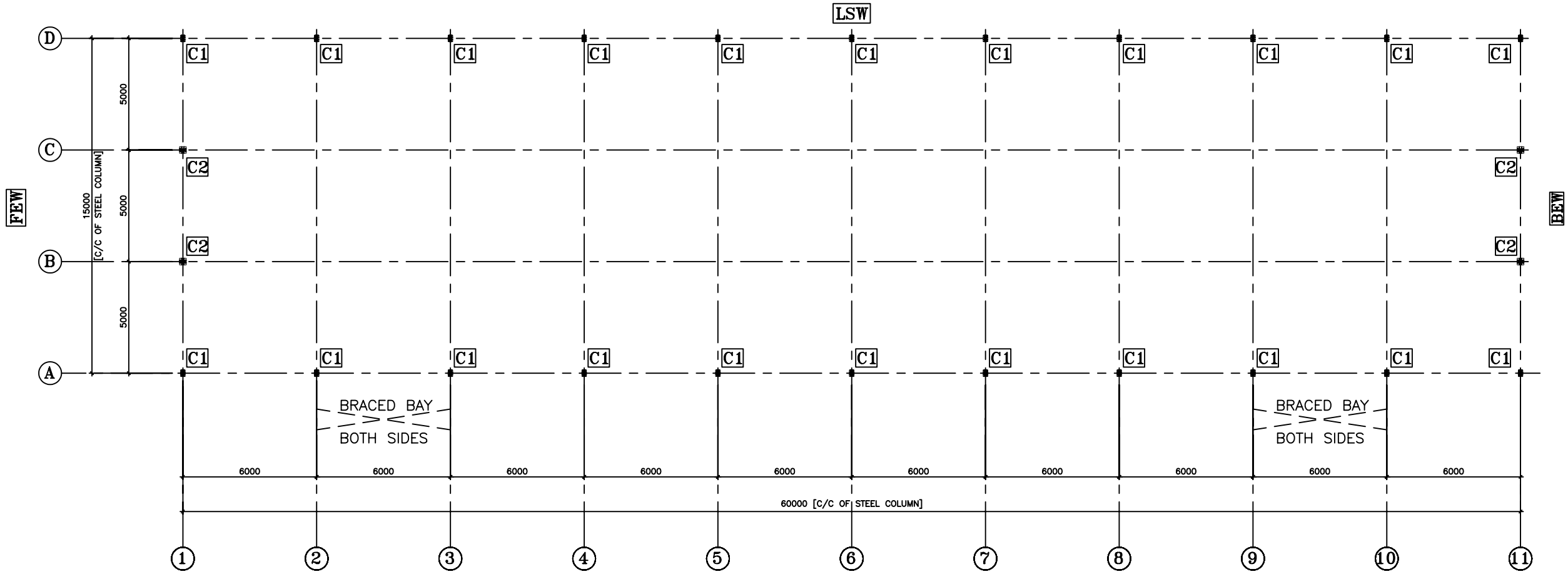

COLUMN LAYOUT PLAN

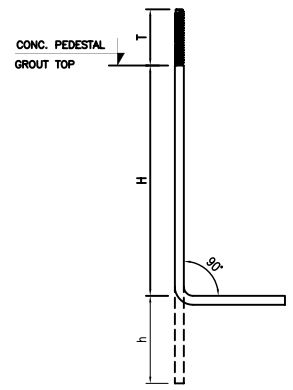

ANCHOR BOLT SCHEDULE

BOLT DESCRIPTION	USAGE	DIA.	H	h	T
AB 20X750	END FRAME	20	750	150	100
AB 20X750	MAIN FRAME	20	750	150	100

T=THREADED LENGTH

FOR CLIENT USE

1. APPROVED; FABRICATION WORK MAY BE TAKEN UP.
2. APPROVED WITH COMMENTS; FABRICATION MAY BE TAKEN UP INCORPORATING COMMENTS.
3. TO BE RESUBMITTED AFTER INCORPORATING COMMENTS FOR APPROVAL.

(PLEASE TICK ' ✓ ' THE APPROPRIATE ONE)

SEAL & SIGNATURE.

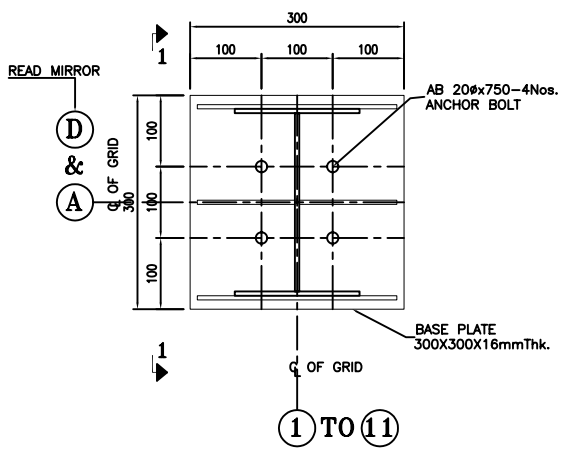

DETAIL-C1

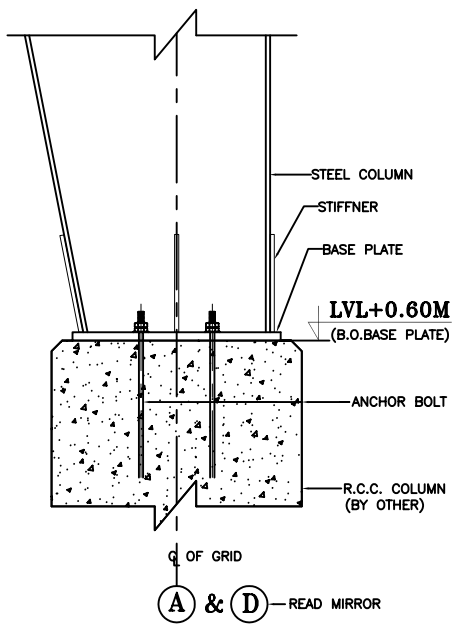

SECTION 1-1

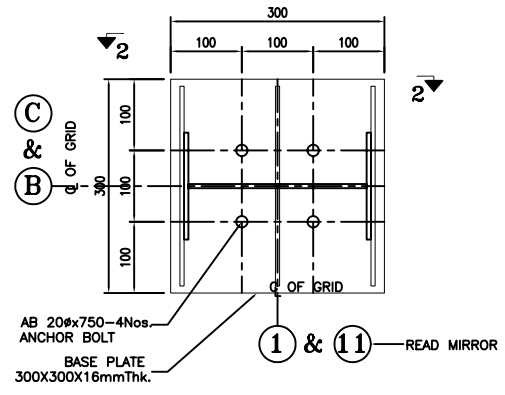

DETAIL-C2

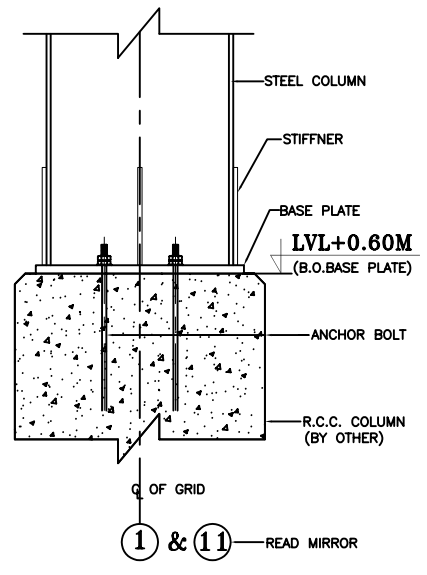

SECTION 2-2

NOTES:-

1. ALL DIMENSIONS ARE IN MM.

REV	REVISIONS	NAME	DATE
R3	DRAWING REVISED AS PER CLIENT'S COMMENT	A.K.GAUR	21.01.2011
R2	DRAWING REVISED AS PER CLIENT'S COMMENT	NITIN	14.01.2011
R1	DRAWING REVISED AS PER CLIENT'S COMMENT	NITIN	13.01.2011

Project: M/s. BHARAT HEAVY ELECTRICALS Ltd.

Building: (CLOSED SHED)

Drawing Title: ANCHOR BOLT DRAWING (SECTION & DETAILS)

Consultant: –

Client.: M/s. BHARAT HEAVY ELECTRICALS Ltd.

STEELCLAD INFRA PRIVATE LIMITED.
46 ANSAL PLAZA, VAISHALI
E- mail: business.b@steelclad.in
Ph-01204557400 FAX-1204557408

Drawn by:	NITIN NIRWAN	Scale: 1:125	Date: 04.01.2011		
Checked by:	A.K.GAUR	Project No:	Drawing No: AB-01 (Sh. 1 of 1)	Revision: R3	
Approved by:	A.SRIVASTAVA	SIPL/J-060			

NOTE:-
1. All rights reserved. This drawing contains proprietary information which is protected by copyright. No part of this drawing may be reproduced, translated in computer language, or transmitted in any form whatsoever without the prior written consent of STEELCLAD INFRA PRIVATE LIMITED

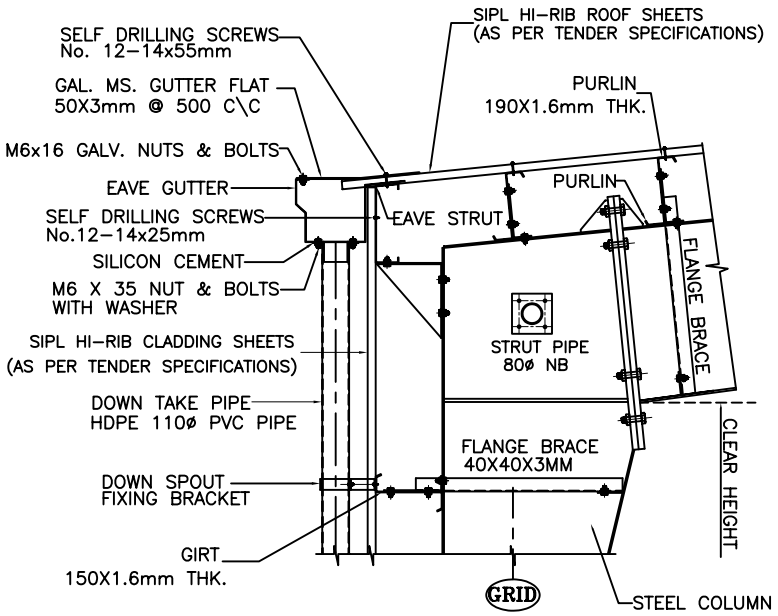

EAVES DETAIL

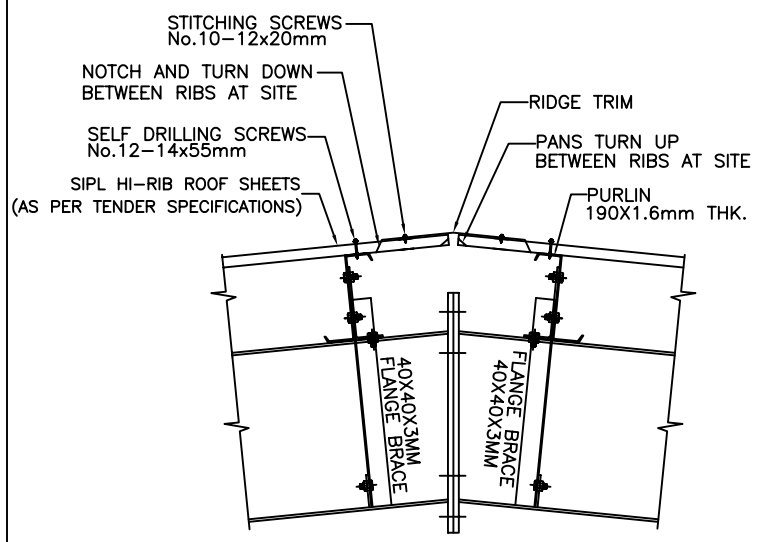

RIDGE DETAIL

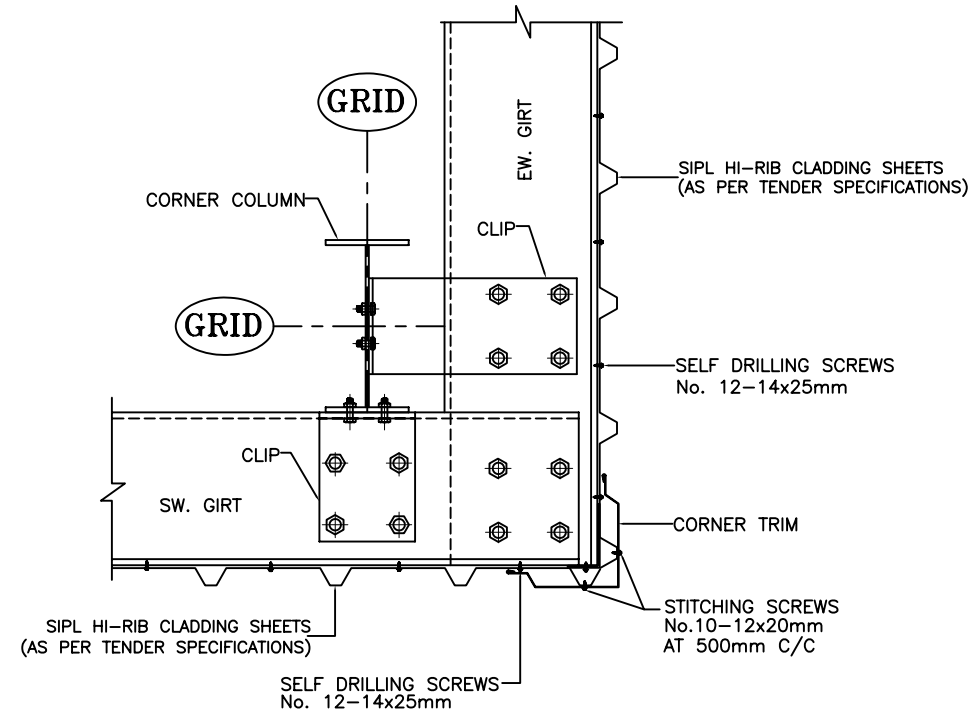

TYP. CORNER DETAIL

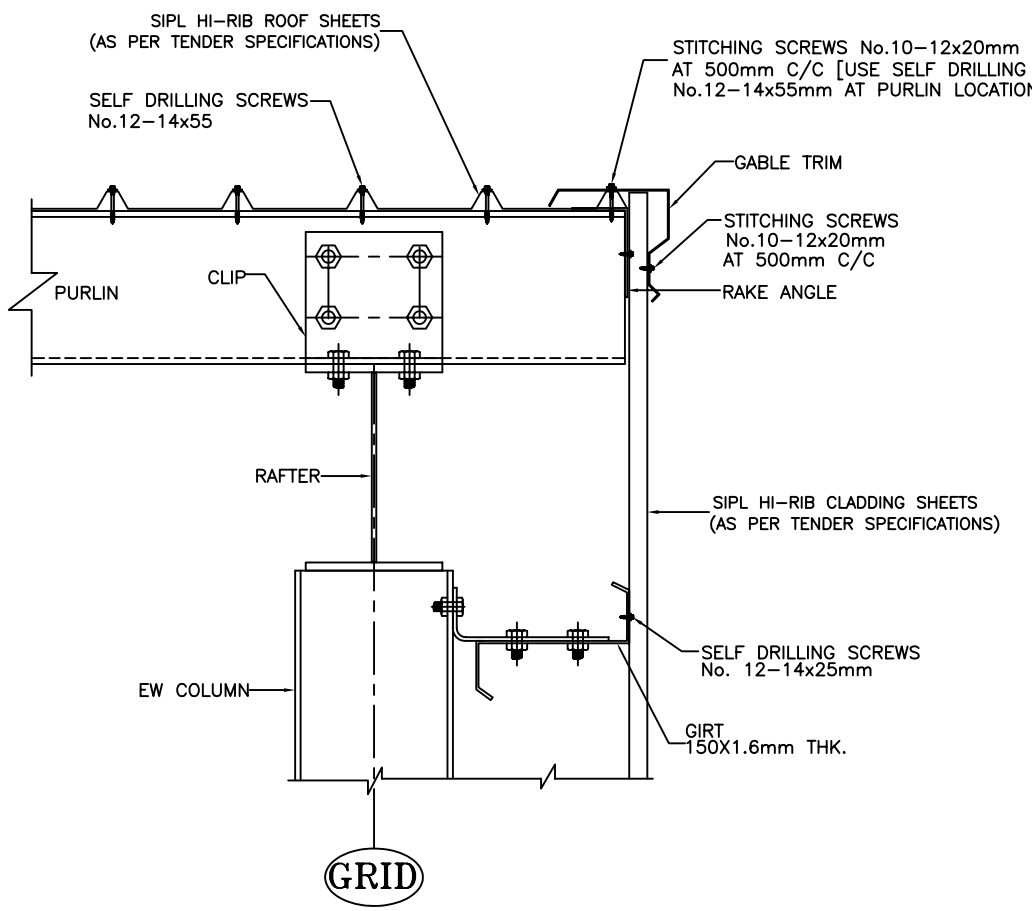

TYP.GABLE END DETAIL

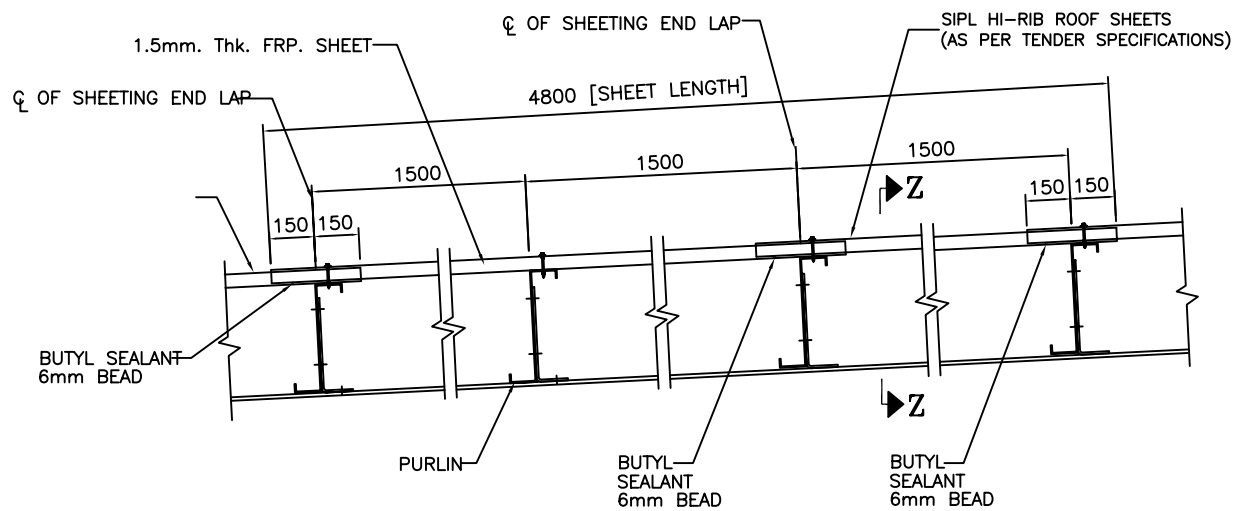

TYP. FRP. SHEET FIXING DETAIL

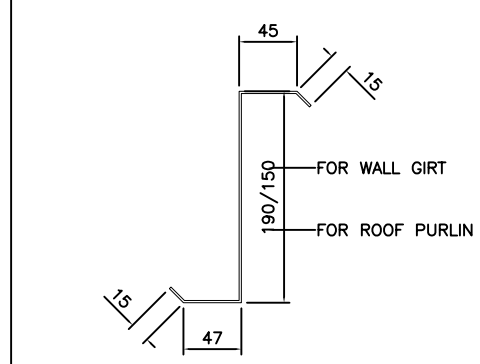

TYP. PURLIN & GIRT DETAIL

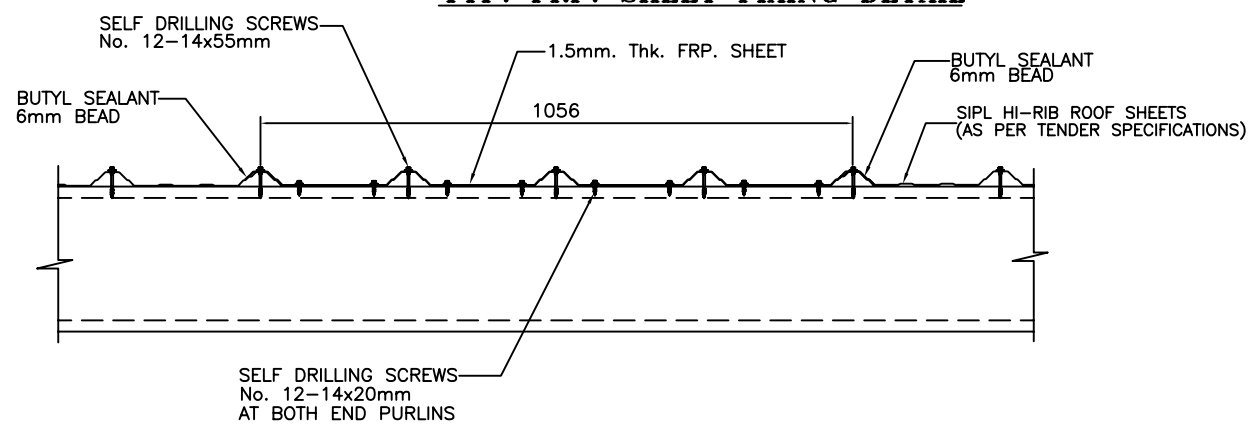

SECTION Z–Z

REV	REVISIONS	NAME	DATE
R3	DRAWING REVISED AS PER CLIENT'S COMMENT	A.K.GAUR	21.01.2011
R2	DRAWING REVISED AS PER CLIENT'S COMMENT	NITIN	14.01.2011
R1	DRAWING REVISED AS PER CLIENT'S COMMENT	NITIN	12.01.2011

Project:
M/s. BHARAT HEAVY ELECTRICALS Ltd.

Building:
(CLOSED SHED WITH MM OFFICE AND C & I ROOM)

Drawing Title: GENERAL ARRANGEMENT DRAWING DETAILS

Consultant:
*

Client.:
M/s. BHARAT HEAVY ELECTRICALS Ltd.

STEELCLAD INFRA PRIVATE LIMITED.
46 ANSAL PLAZA, VAISHALI
E- mail : business.b@steelclad.in
Ph-0120-4557400 FAX-0120-4557408

Drawn by:	NITIN NIRWAN	Scale: 1:100	Date: 04.01.2011		
Checked by:	A.K.GAUR	Project No:	Drawing No. GA–01 (Sh. 4 of 4)	Revision:	
Approved by:	A.SRIVASTAVA	SIPL/J–062		R3	

NOTE:–

1. All rights reserved. This drawing contains proprietary information which is protected by copyright. No part of this drawing may be reproduced, translated in computer language, or transmitted in any form whatsoever without the prior written consent of STEELCLAD INFRA PRIVATE LIMITED.

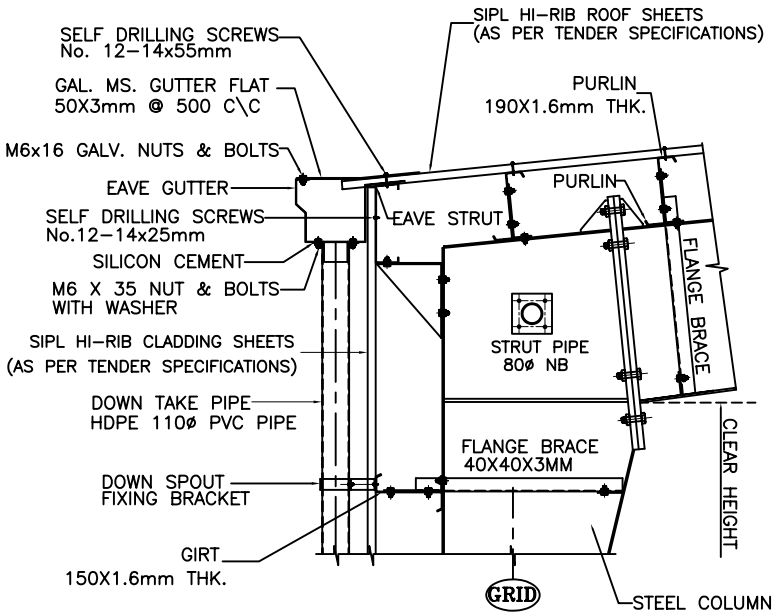

EAVES DETAIL

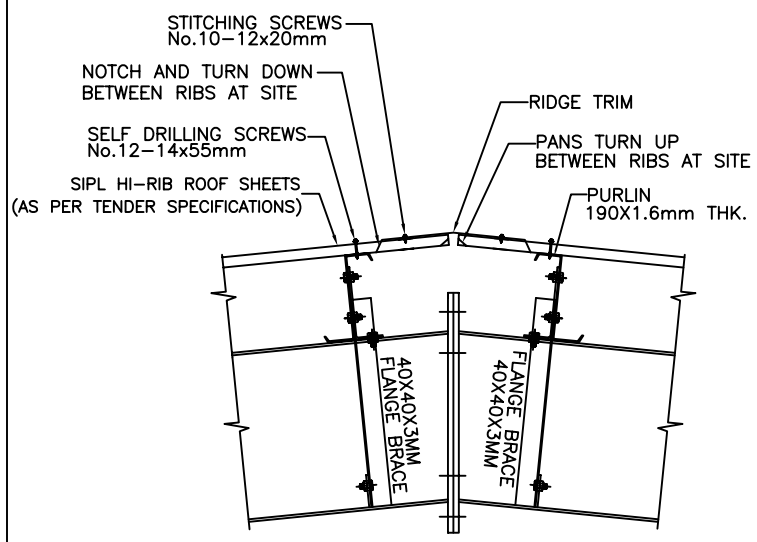

RIDGE DETAIL

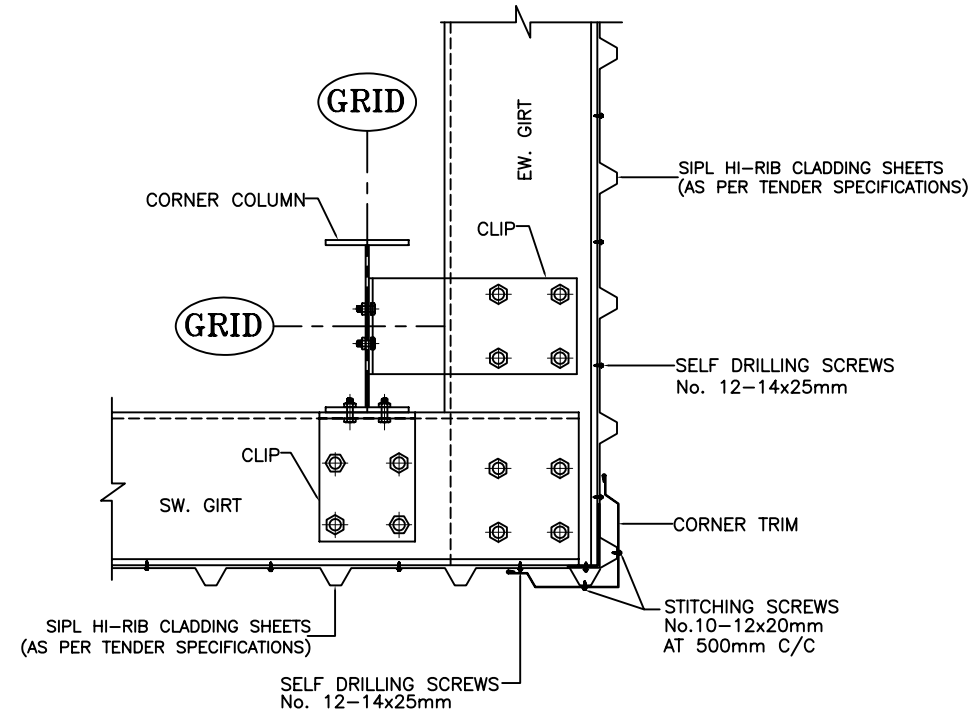

TYP. CORNER DETAIL

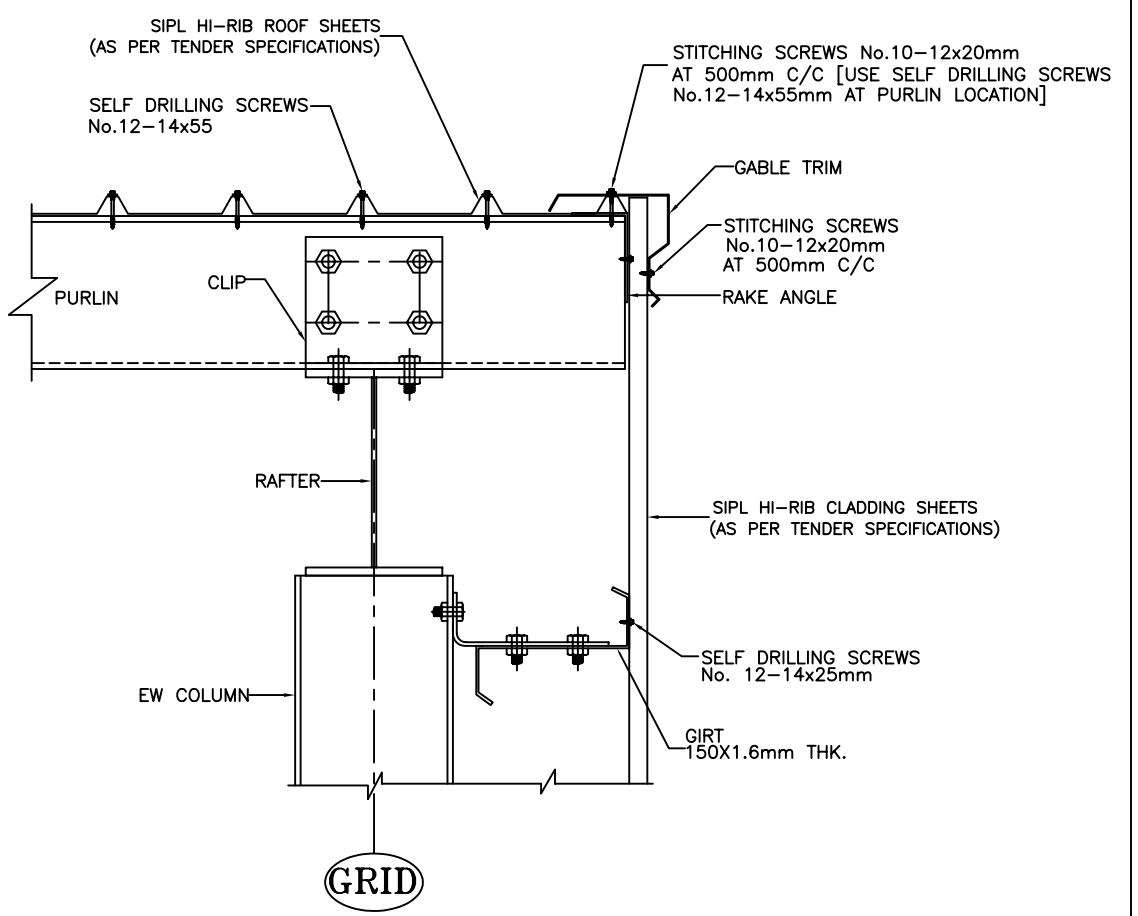

TYP.GABLE END DETAIL

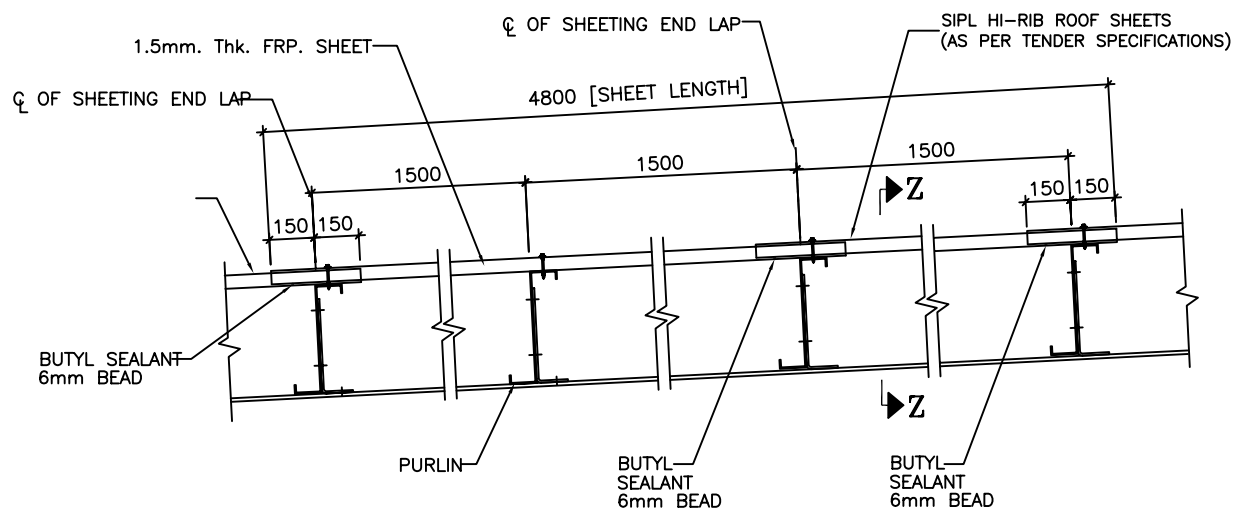

TYP. FRP. SHEET FIXING DETAIL

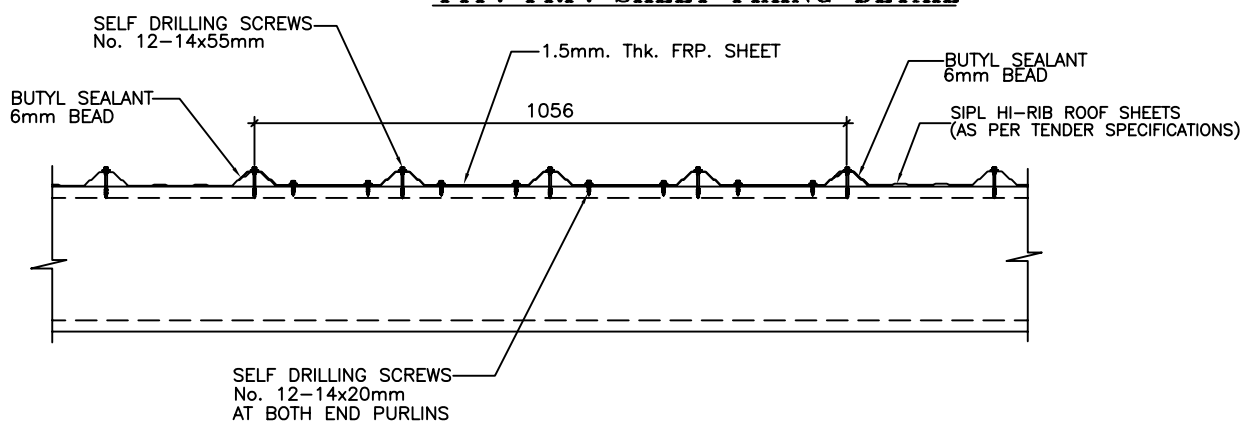

SECTION Z–Z

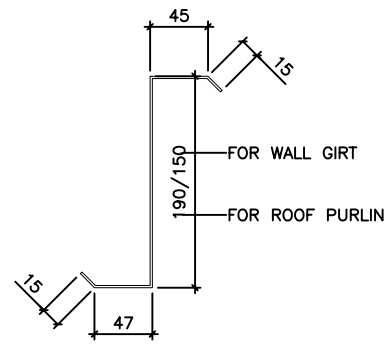

TYP. PURLIN & GIRT DETAIL

REV	REVISIONS	NAME	DATE
R3	DRAWING REVISED AS PER CLIENT'S COMMENT	A.K.GAUR	21.01.2011
R2	DRAWING REVISED AS PER CLIENT'S COMMENT	NITIN	14.01.2011
R1	DRAWING REVISED AS PER CLIENT'S COMMENT	NITIN	12.01.2011

Project:
M/s. BHARAT HEAVY ELECTRICALS Ltd.

Building:
(CLOSED SHED)

Drawing Title: GENERAL ARRANGEMENT DRAWING DETAILS

Consultant:
*

Client.:
M/s. BHARAT HEAVY ELECTRICALS Ltd.

STEELCLAD INFRA PRIVATE LIMITED.
46 ANSAL PLAZA, VAISHALI
E- mail : business.b@steelclad.in
Ph-0120-4557400 FAX-0120-4557408

Drawn by:	NITIN NIRWAN	Scale: 1:100	Date: 04.01.2011		
Checked by:	A.K.GAUR	Project No:	Drawing No. GA–01 (Sh. 4 of 4)	Revision:	
Approved by:	A.SRIVASTAVA	SIPL/J–060		R3	

NOTE:–

1. All rights reserved. This drawing contains proprietary information which is protected by copyright. No part of this drawing may be reproduced, translated in computer language, or transmitted in any form whatsoever without the prior written consent of STEELCLAD INFRA PRIVATE LIMITED

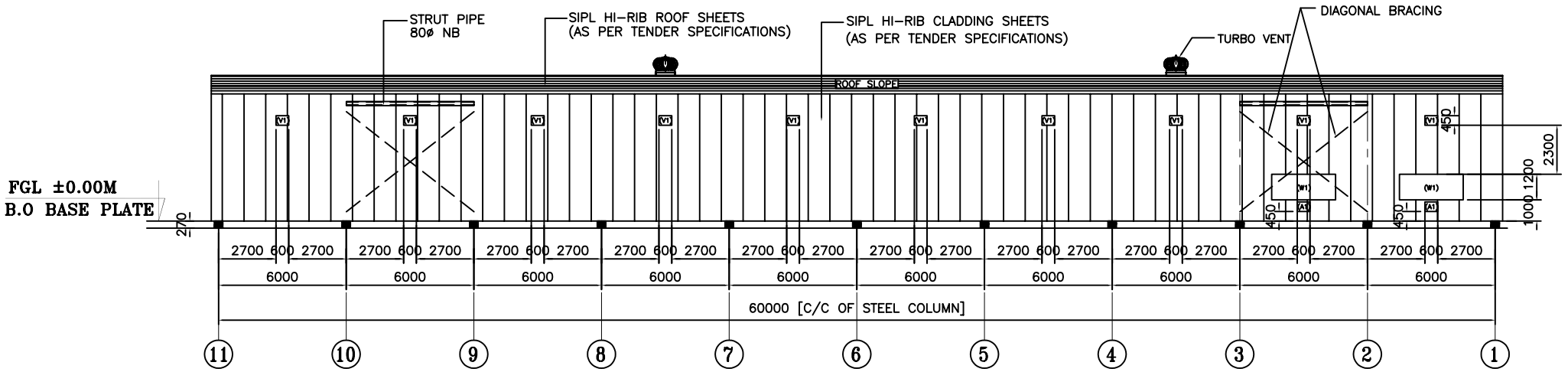

SIDE WALL ELEVATION ALONG GRID-D

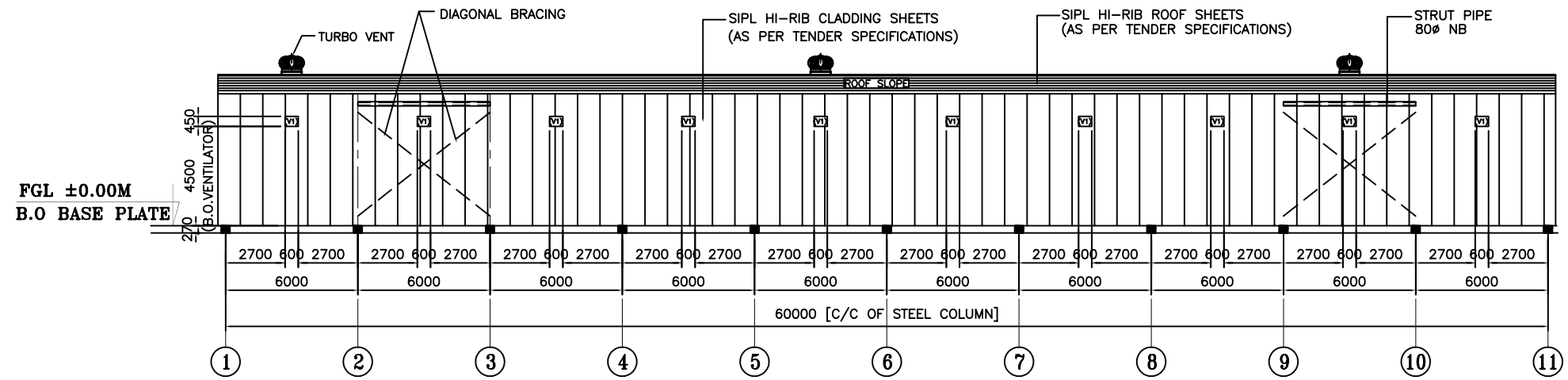

SIDE WALL ELEVATION ALONG GRID-A

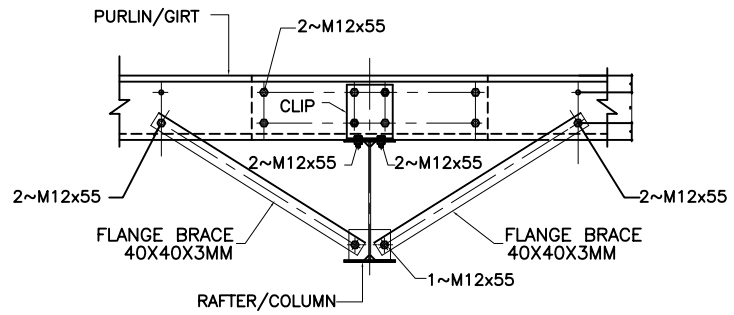

FRONT VIEW
TYPICAL FLANGE BRACE & LAP DETAIL

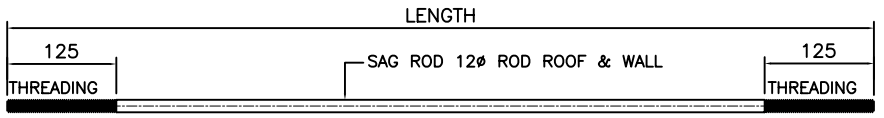

TYP. SAG ROD DETAIL

NOTES:-

1. ALL DIMENSIONS ARE IN MM.
2. ALL LEVEL ARE IN Mtr.

REV	REVISIONS	NAME	DATE
R3	DRAWING REVISED AS PER CLIENT'S COMMENT	A.K.GAUR	21.01.2011
R2	DRAWING REVISED AS PER CLIENT'S COMMENT	MITIN	14.01.2011
R1	DRAWING REVISED AS PER CLIENT'S COMMENT	MITIN	13.01.2011

Project:
M/s. BHARAT HEAVY ELECTRICALS Ltd.

Building:
(CLOSED SHED WITH MM OFFICE AND C & I ROOM)

Drawing Title: GENERAL ARRANGEMENT DRAWING
SECTION & ELEVATION AND DETAIL

Consultant: *

Client.: M/s. BHARAT HEAVY ELECTRICALS Ltd.

STEELCLAD INFRA PRIVATE LIMITED.
46 ANSAL PLAZA, VAISHALI
E- mail : business.b@steelclad.in
Ph-0120-4557400 FAX-0120-4557408

Drawn by:	MITIN NIRWAN	Scale: 1:100	Date: 04.01.2011		
Checked by:	A.K.GAUR	Project No:	Drawing No: GA-01 (Sh. 3 of 4)	Revision: R3	
Approved by:	A.SRIVASTAVA	SIPL/J-062			

NOTE:-

1. All rights reserved. This drawing contains proprietary information which is protected by copyright. No part of this drawing may be reproduced, translated in computer language, or transmitted in any form whatsoever without the prior written consent of STEELCLAD INFRA PRIVATE LIMITED.

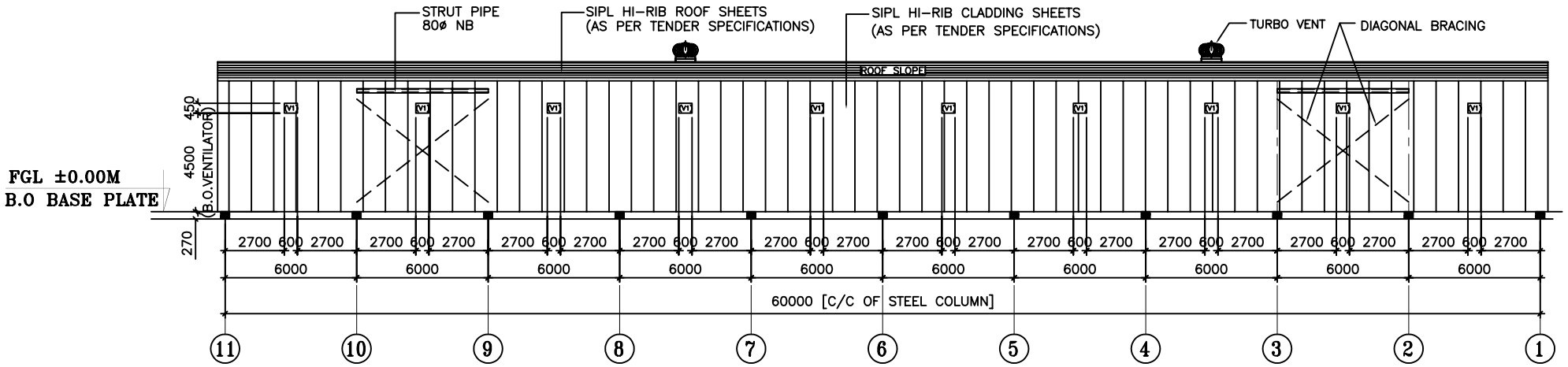

SIDE WALL ELEVATION ALONG GRID-D

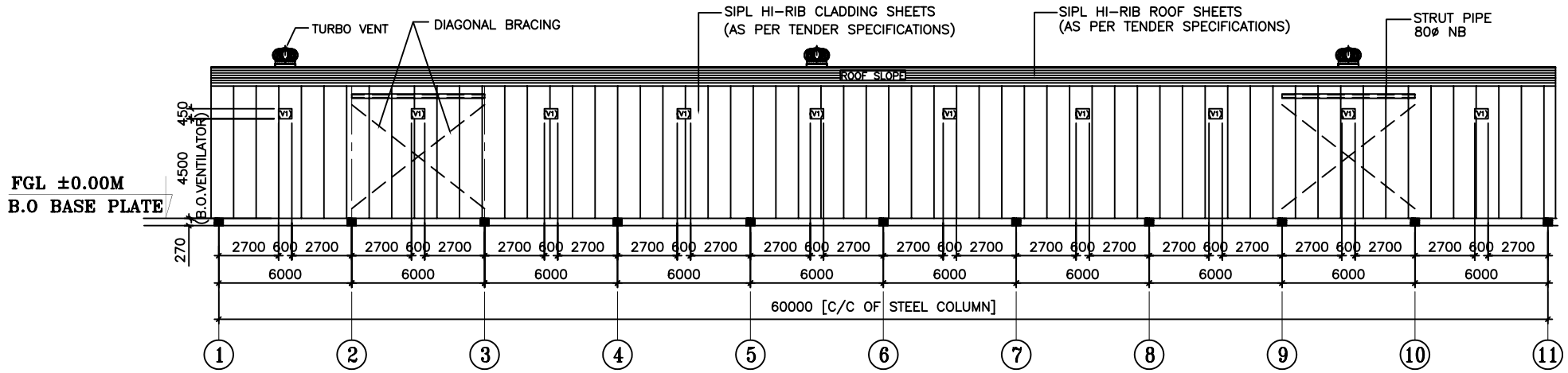

SIDE WALL ELEVATION ALONG GRID-A

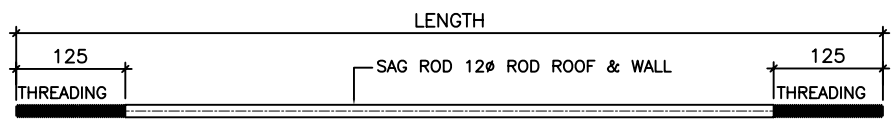

TYP. SAG ROD DETAIL

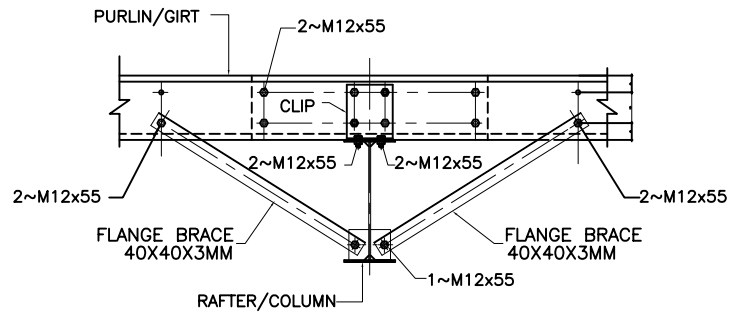

FRONT VIEW
TYPICAL FLANGE BRACE & LAP DETAIL

NOTES:-

1. ALL DIMENSIONS ARE IN MM.
2. ALL LEVEL ARE IN Mtr.
3. SIPL - STEELCLAD INFRA PVT. LTD.

REV	REVISIONS	NAME	DATE
R3	DRAWING REVISED AS PER CLIENT'S COMMENT	A.K.GAUR	21.01.2011
R2	DRAWING REVISED AS PER CLIENT'S COMMENT	MITIN	14.01.2011
R1	DRAWING REVISED AS PER CLIENT'S COMMENT	MITIN	13.01.2011

Project:
M/s. BHARAT HEAVY ELECTRICALS Ltd.

Building:
(CLOSED SHED)

Drawing Title: **GENERAL ARRANGEMENT DRAWING**
SECTION & ELEVATION AND DETAIL

Consultant:
*

Client.:
M/s. BHARAT HEAVY ELECTRICALS Ltd.

STEELCLAD INFRA PRIVATE LIMITED.
46 ANSAL PLAZA, VAISHALI
E- mail : business.b@steelclad.in
Ph-0120-4557400 FAX-0120-4557408

Drawn by:	MITIN NIRWAN		Scale: 1:100	Date: 04.01.2011	
Checked by:	A.K.GAUR		Project No: SIPL/J-060	Drawing No: GA-01 (Sh. 3 of 4)	Revision: R3
Approved by:	A.SRIVASTAVA				

NOTE:-
1. All rights reserved. This drawing contains proprietary information which is protected by copyright. No part of this drawing may be reproduced, translated in computer language, or transmitted in any form whatsoever without the prior written consent of STEELCLAD INFRA PRIVATE LIMITED

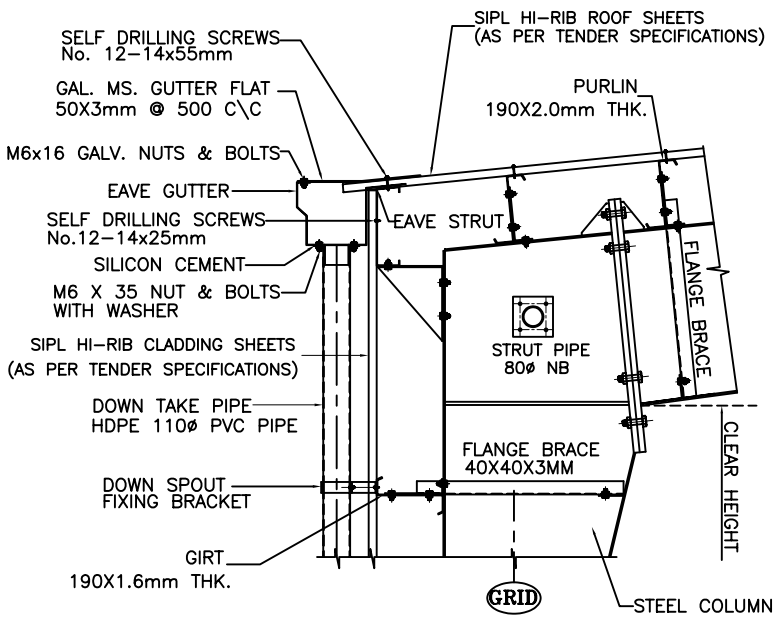

EAVES DETAIL

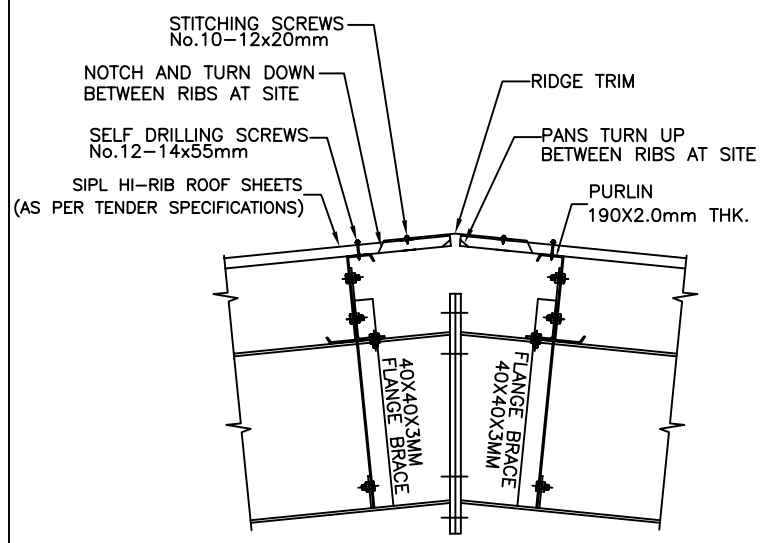

RIDGE DETAIL

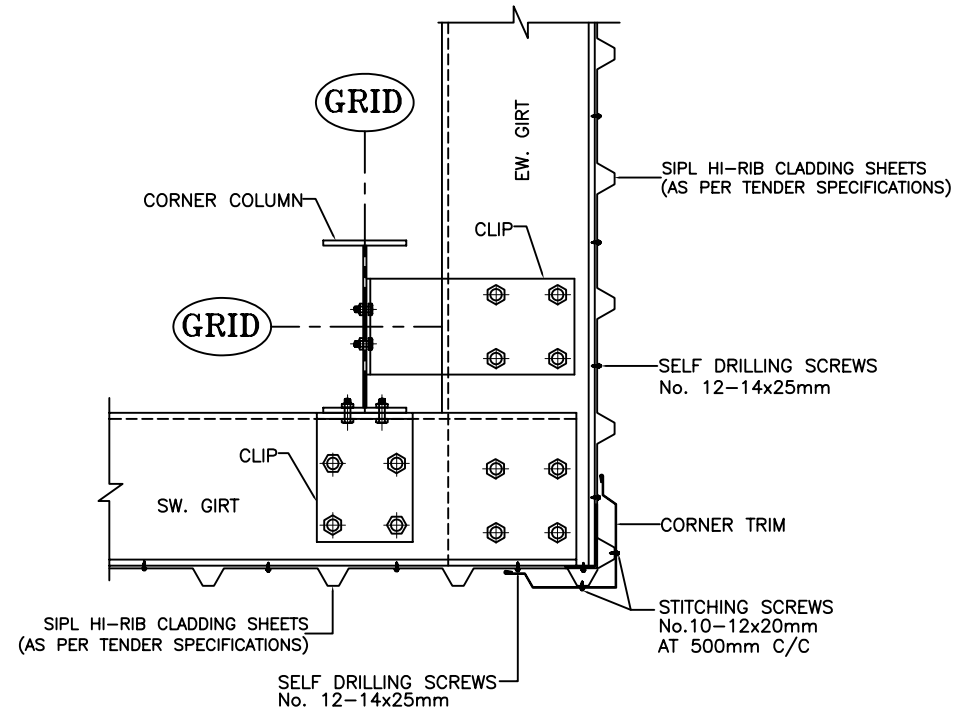

TYP. CORNER DETAIL

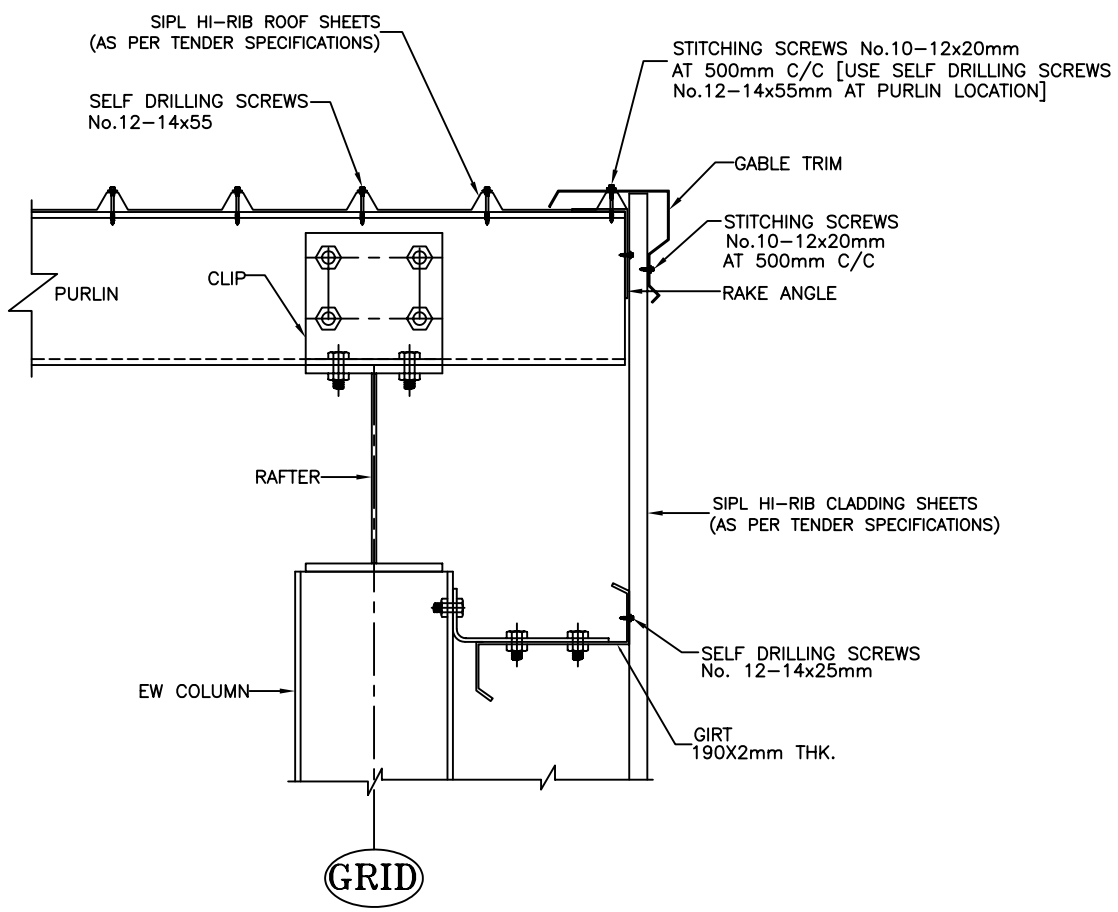

TYP.GABLE END DETAIL

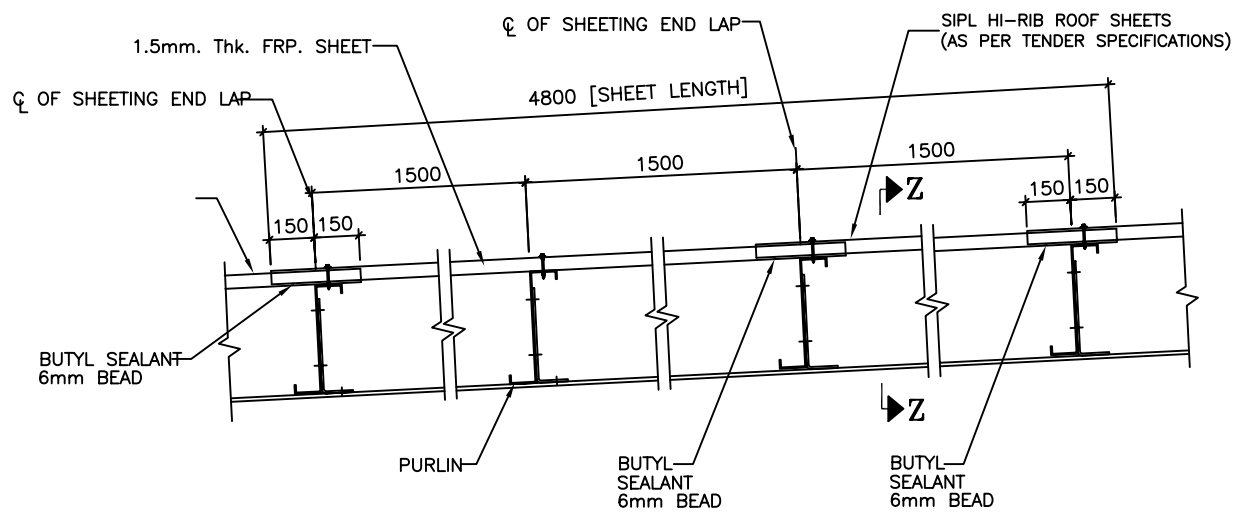

TYP. FRP. SHEET FIXING DETAIL

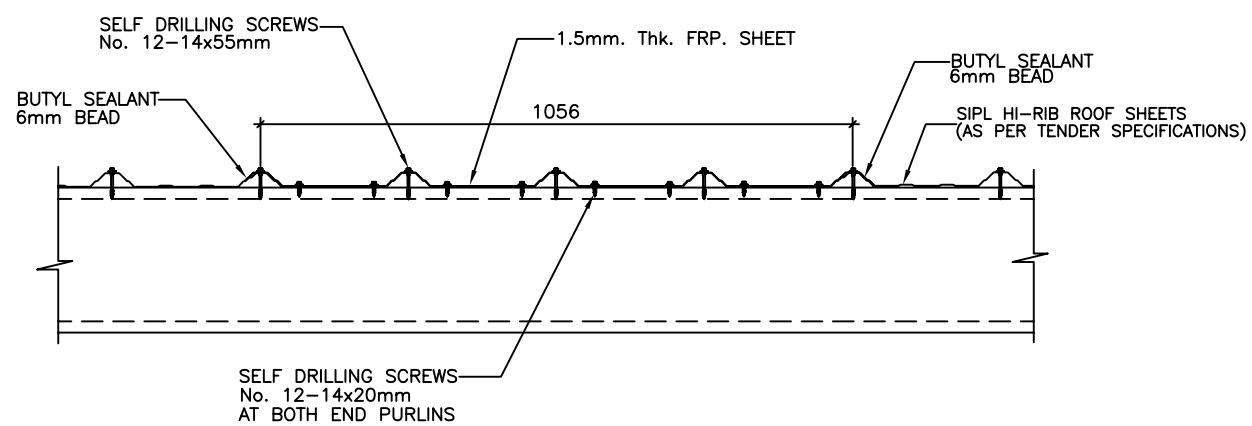

SECTION Z–Z

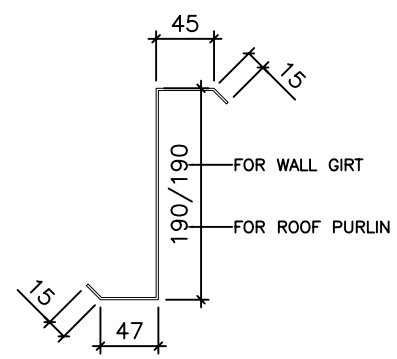

TYP. PURLIN & GIRT DETAIL

REV	REVISIONS	NAME	DATE
R3	DRAWING REVISED AS PER CLIENT'S COMMENT	A.K.GAUR	21.01.2011
R2	DRAWING REVISED AS PER CLIENT'S COMMENT	NITIN	14.01.2011
R1	DRAWING REVISED AS PER CLIENT'S COMMENT	NITIN	18.01.2011

Project: M/s. BHARAT HEAVY ELECTRICALS Ltd.

Building: (SEMI CLOSED SHED)

Drawing Title: GENERAL ARRANGEMENT DRAWING DETAIL

Consultant: –

Client.: M/s. BHARAT HEAVY ELECTRICALS Ltd.

STEELCLAD INFRA PRIVATE LIMITED.
46 ANSAL PLAZA, VAISHALI
E- mail : business.b@steelclad.in
Ph-0120-4557400 FAX-0120-4557408

Drawn by:	NITIN NIRWAN	Scale: 1:100	Date: 04.01.2011		
Checked by:	A.K.GAUR	Project No:	Drawing No. GA–01 (Sh. 3 of 3)	Revision:	
Approved by:	A.SRIVASTAVA	SIPL/J–061		R3	

NOTE:–

1. All rights reserved. This drawing contains proprietary information which is protected by copyright. No part of this drawing may be reproduced, translated in computer language, or transmitted in any form whatsoever without the prior written consent of STEELCLAD INFRA PRIVATE LIMITED

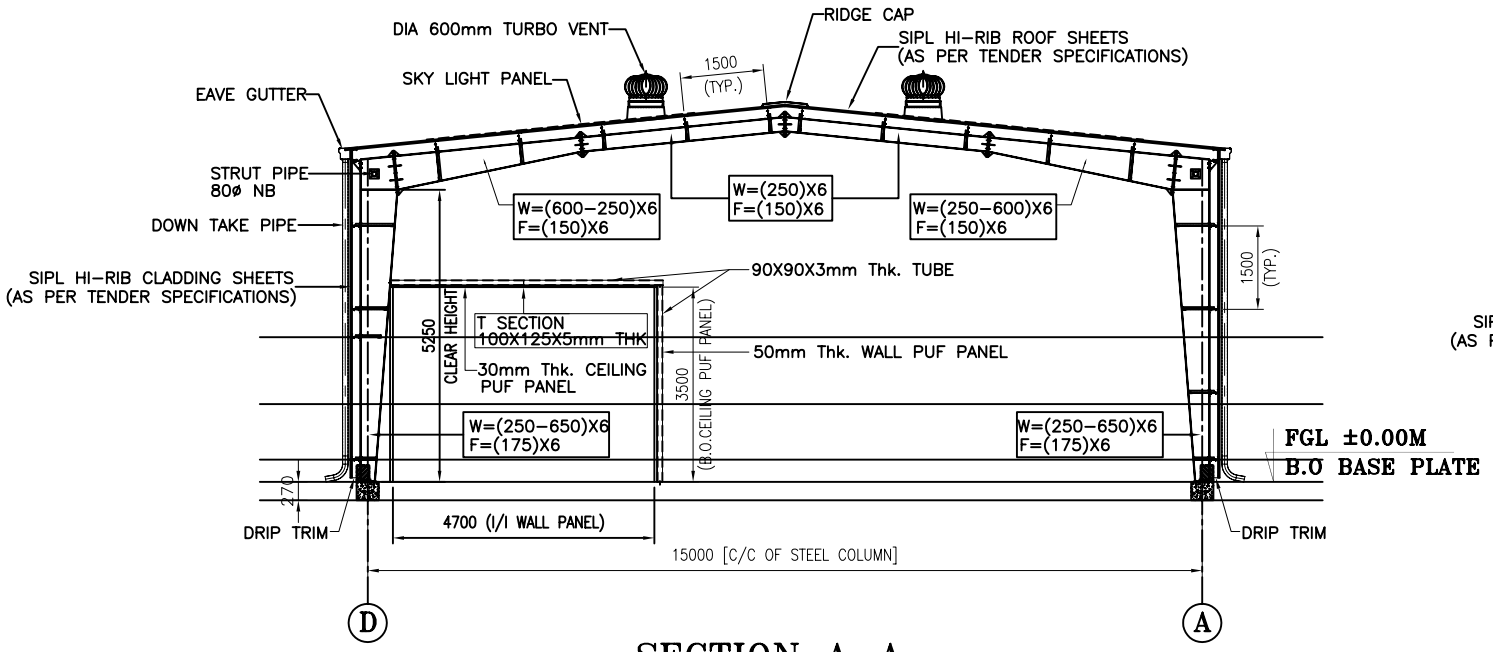

SECTION A-A

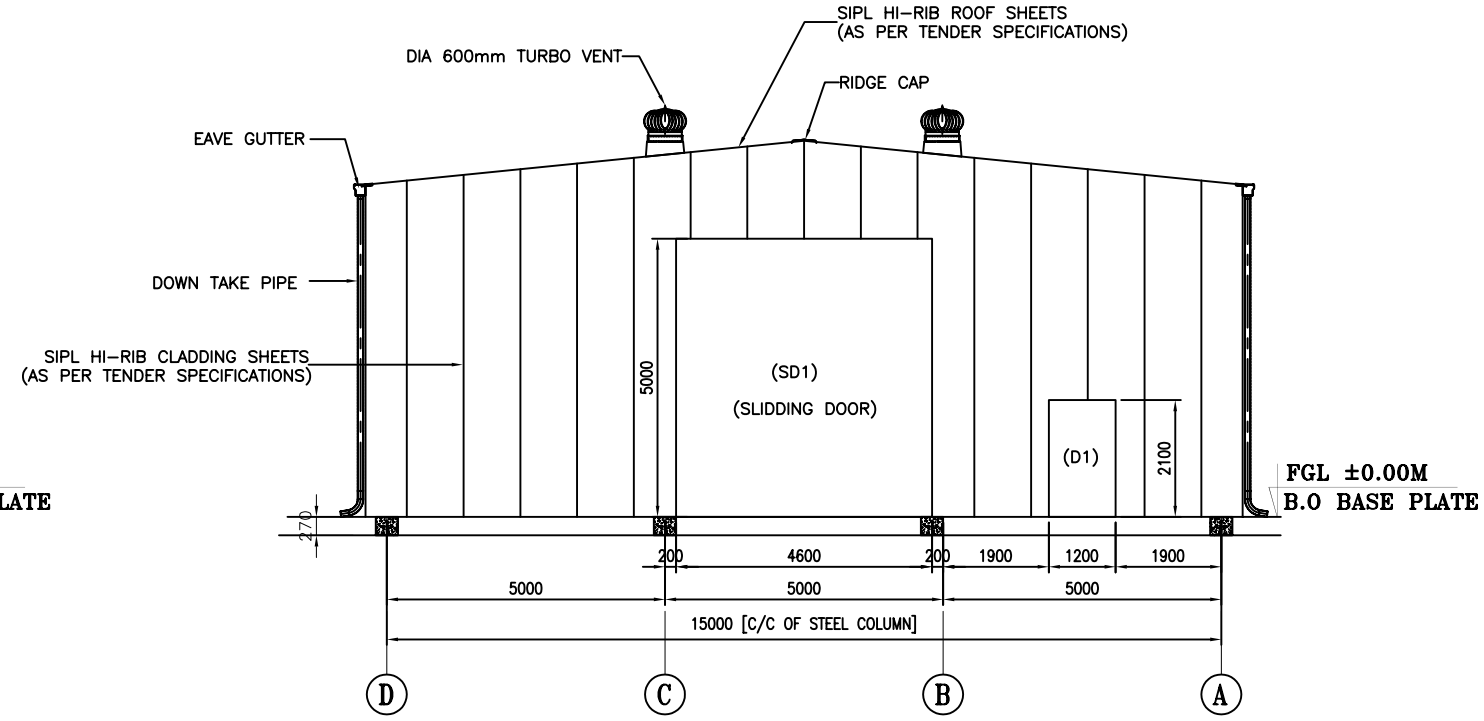

END WALL ELEVATION ALONG GRID-1

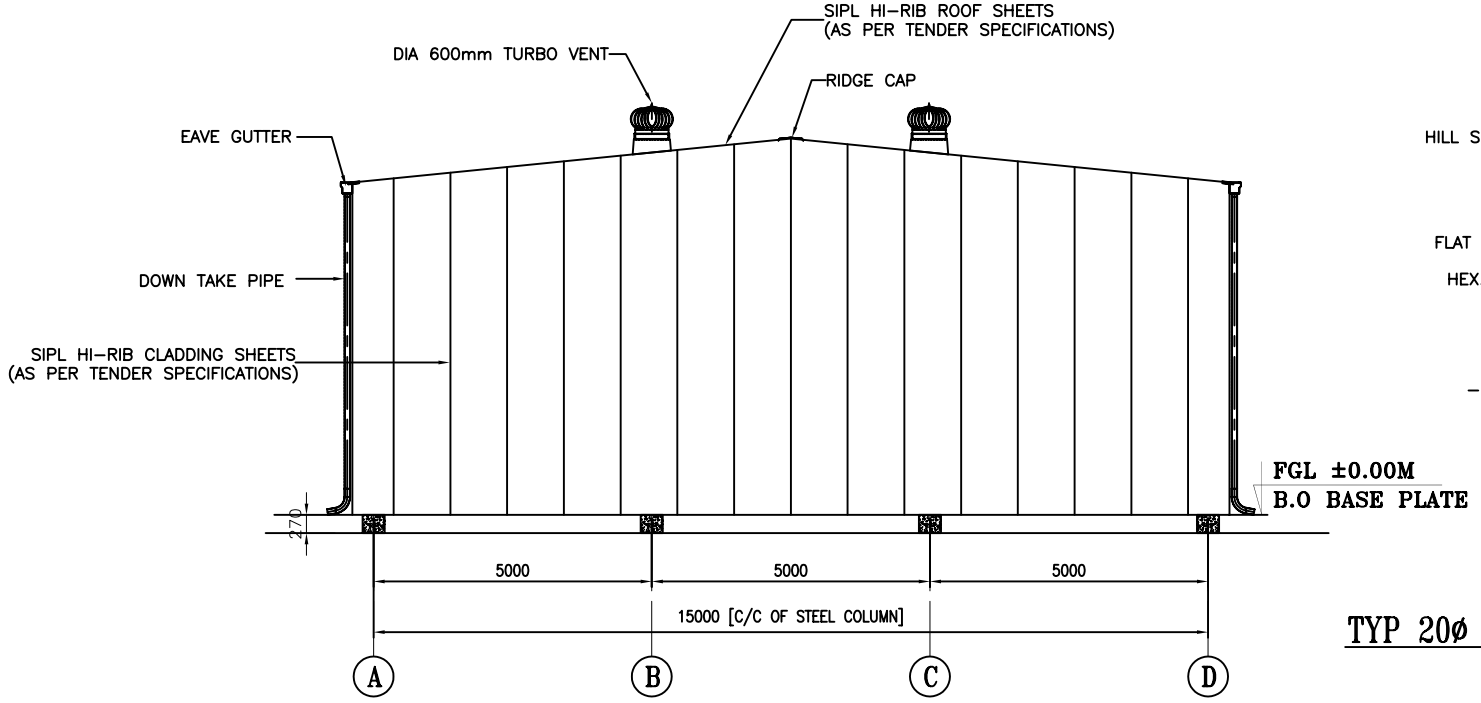

END WALL ELEVATION ALONG GRID-11

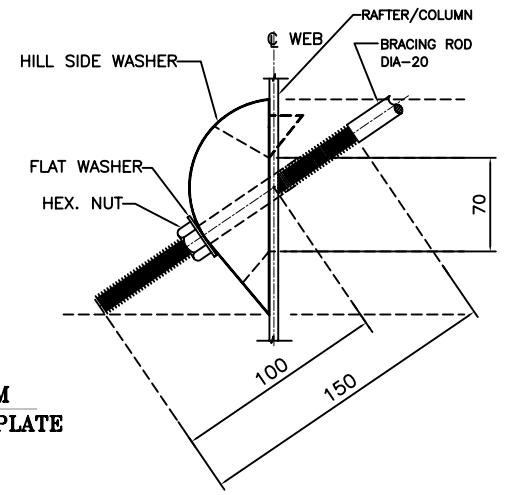

TYP 20ø ROD BRACING FIXING DETAIL

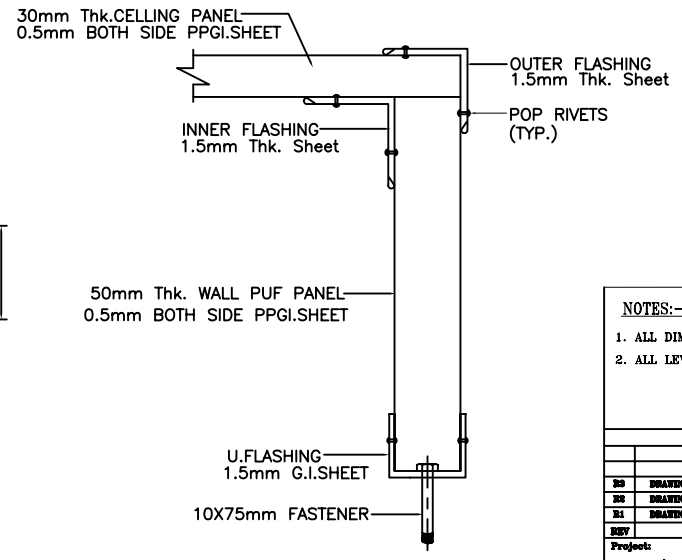

(TYP.) WALL TO CELLING CONNECTION DETAILS

NOTES:-

1. ALL DIMENSIONS ARE IN MM.
2. ALL LEVEL ARE IN Mtr.

REV	REVISIONS	NAME	DATE
R3	DRAWING REVISED AS PER CLIENT'S CONCERNT	A.K.GAUR	21.01.2011
R2	DRAWING REVISED AS PER CLIENT'S CONCERNT	MITIN	14.01.2011
R1	DRAWING REVISED AS PER CLIENT'S CONCERNT	MITIN	13.01.2011

Project: M/s. BHARAT HEAVY ELECTRICALS Ltd.

Building: (CLOSED SHED WITH MM OFFICE AND C & I ROOM)

Drawing Title: GENERAL ARRANGEMENT DRAWING
SECTION & ELEVATION AND DETAIL

Consultant: *

Client.: M/s. BHARAT HEAVY ELECTRICALS Ltd.

STEELCLAD INFRA PRIVATE LIMITED.
46 ANSAL PLAZA, VAISHALI
E- mail : business.b@steelclad.in
Ph-0120-4557400 FAX-0120-4557408

Drawn by:	MITIN NIRWAN	Scale: 1:100	Date: 04.01.2011		
Checked by:	A.K.GAUR	Project No: SIPL/J-062	Drawing No: GA-01 (Sh. 2 of 4)	Revision: R3	
Approved by:	A.SRIVASTAVA				

NOTE:-
1. All rights reserved. This drawing contains proprietary information which is protected by copyright. No part of this drawing may be reproduced, translated in a computer language, or transmitted in any form whatsoever without the prior written consent of STEELCLAD INFRA PRIVATE LIMITED.

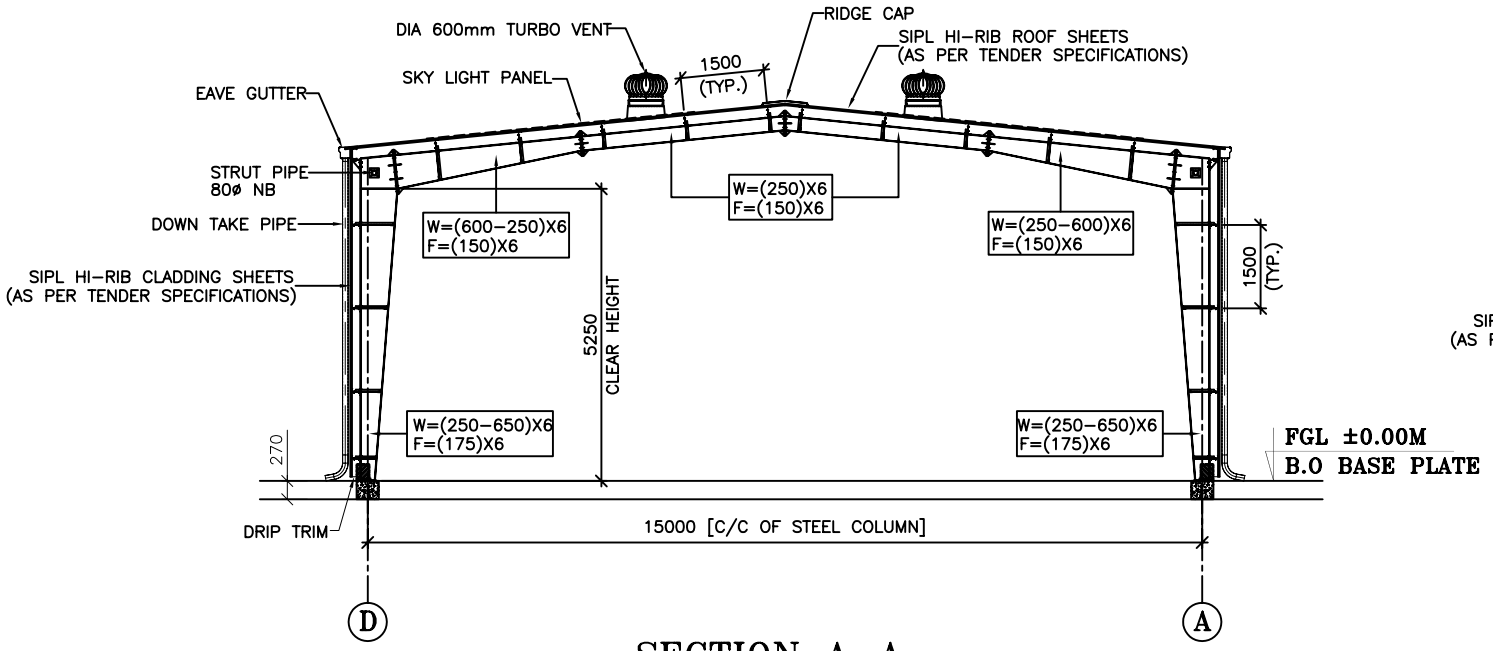

SECTION A-A

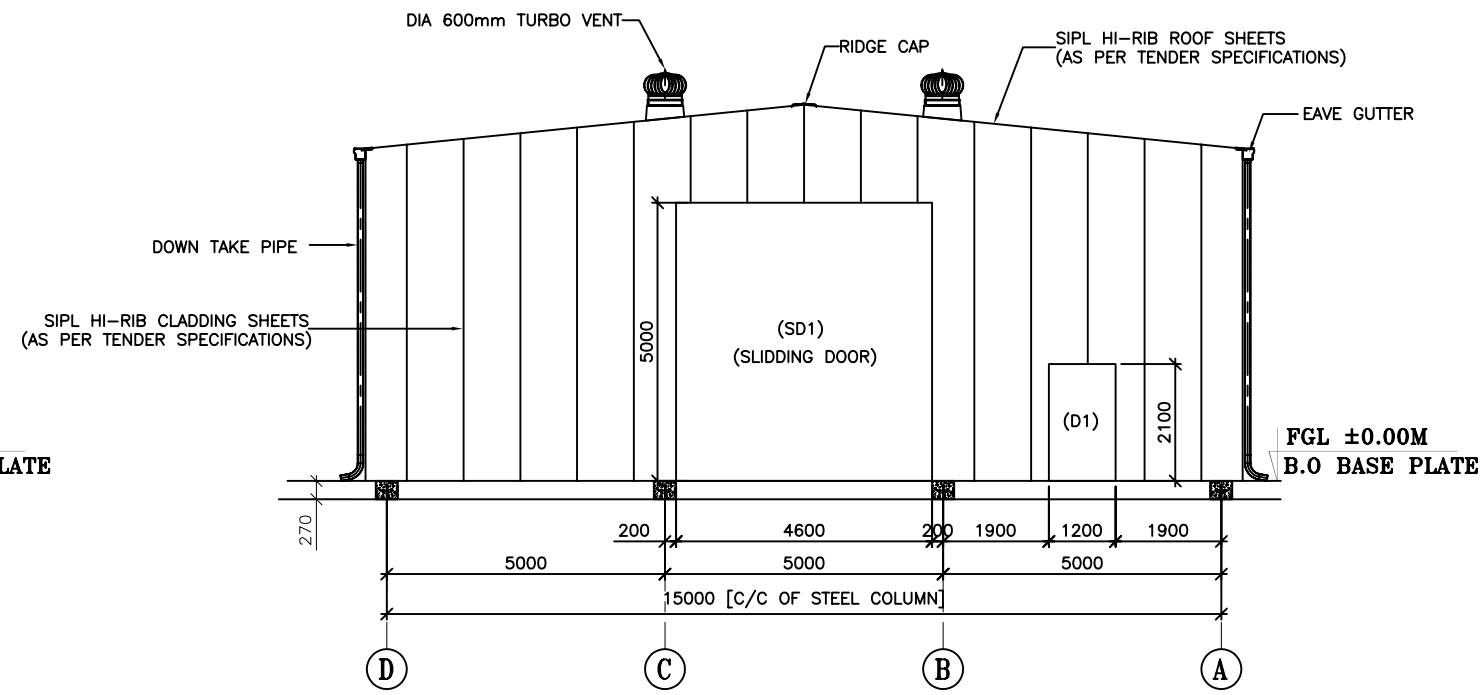

END WALL ELEVATION ALONG GRID-1

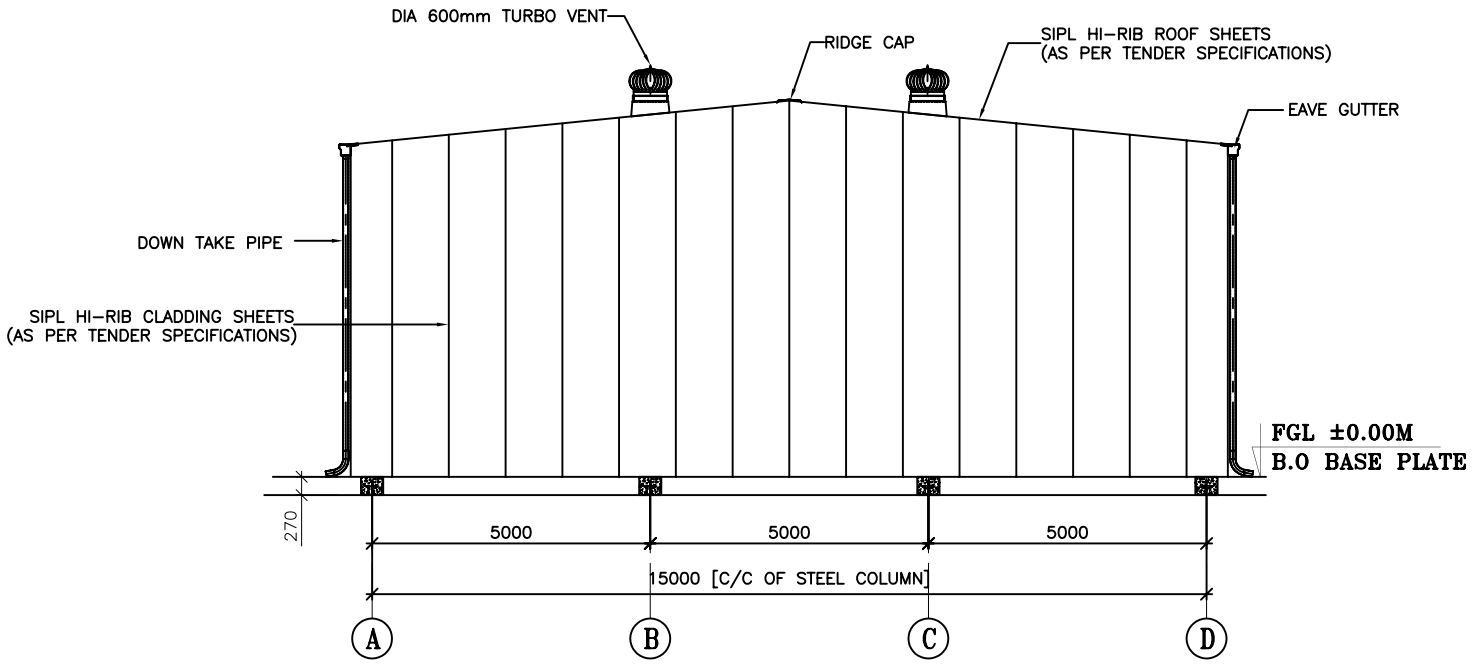

END WALL ELEVATION ALONG GRID-11

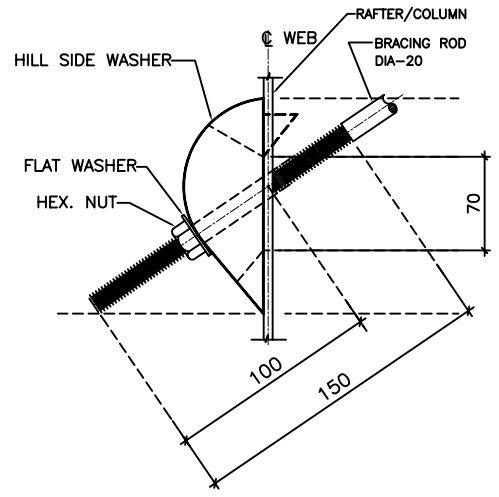

TYP 20ø ROD BRACING FIXING DETAIL

NOTES:-

1. ALL DIMENSIONS ARE IN MM.
2. ALL LEVEL ARE IN Mtr.
3. SIPL - STEELCLAD INFRA PVT. LTD.

REV	REVISIONS	NAME	DATE
R3	DRAWING REVISED AS PER CLIENT'S COMMENT	A.K.GAUR	21.01.2011
R2	DRAWING REVISED AS PER CLIENT'S COMMENT	NITIN	14.01.2011
R1	DRAWING REVISED AS PER CLIENT'S COMMENT	NITIN	10.01.2011

Project:
M/s. BHARAT HEAVY ELECTRICALS Ltd.

Building:
(CLOSED SHED)

Drawing Title: **GENERAL ARRANGEMENT DRAWING**
SECTION & ELEVATION AND DETAIL

Consultant:
*

Client.:
M/s. BHARAT HEAVY ELECTRICALS Ltd.

STEELCLAD INFRA PRIVATE LIMITED.
46 ANSAL PLAZA, VAISHALI
E- mail : business.b@steelclad.in
Ph-0120-4557400 FAX-0120-4557408

Drawn by:	NITIN NIRWAN	Scale: 1:100	Date: 04.01.2011		
Checked by:	A.K.GAUR	Project No: SIPL/J-060	Drawing No: GA-01 (Sh. 2 of 4)	Revision: R3	
Approved by:	A.SRIVASTAVA				

NOTE:-
1. All rights reserved. This drawing contains proprietary information which is protected by copyright. No part of this drawing may be reproduced, translated in computer language, or transmitted in any form whatsoever without the prior written consent of STEELCLAD INFRA PRIVATE LIMITED

A1

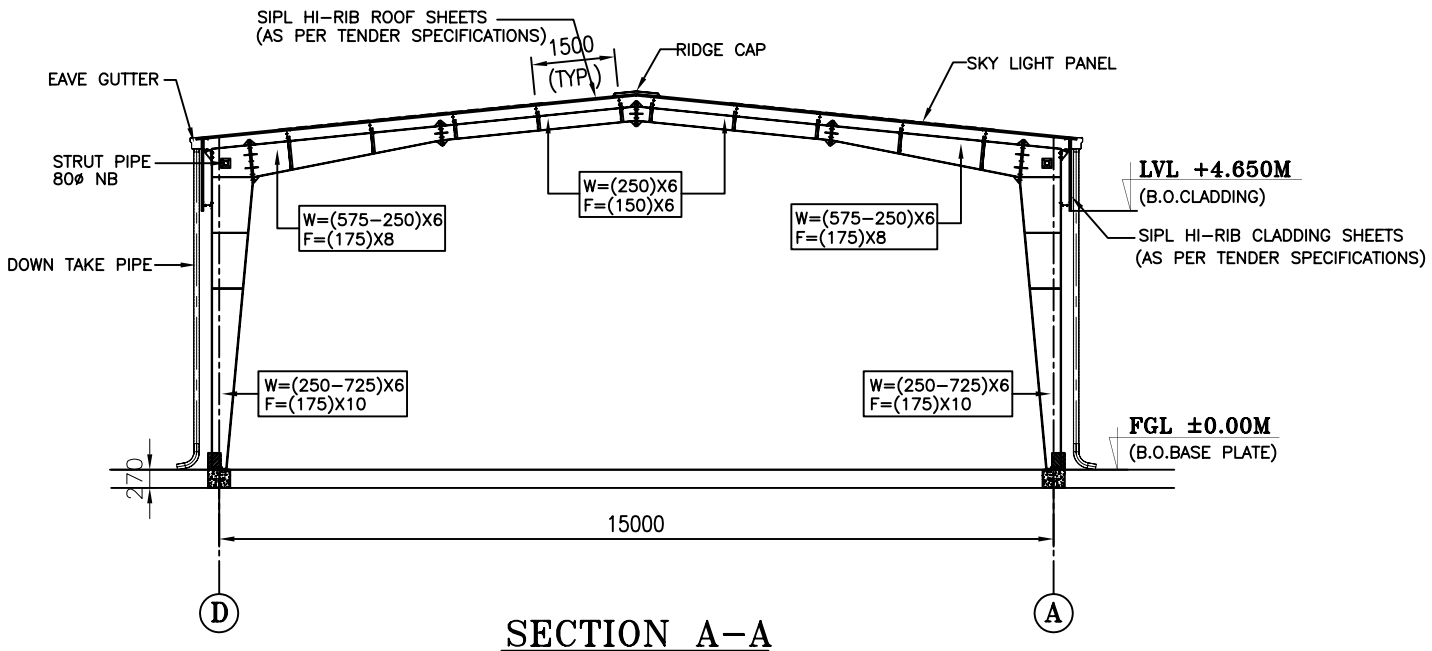

SECTION A-A

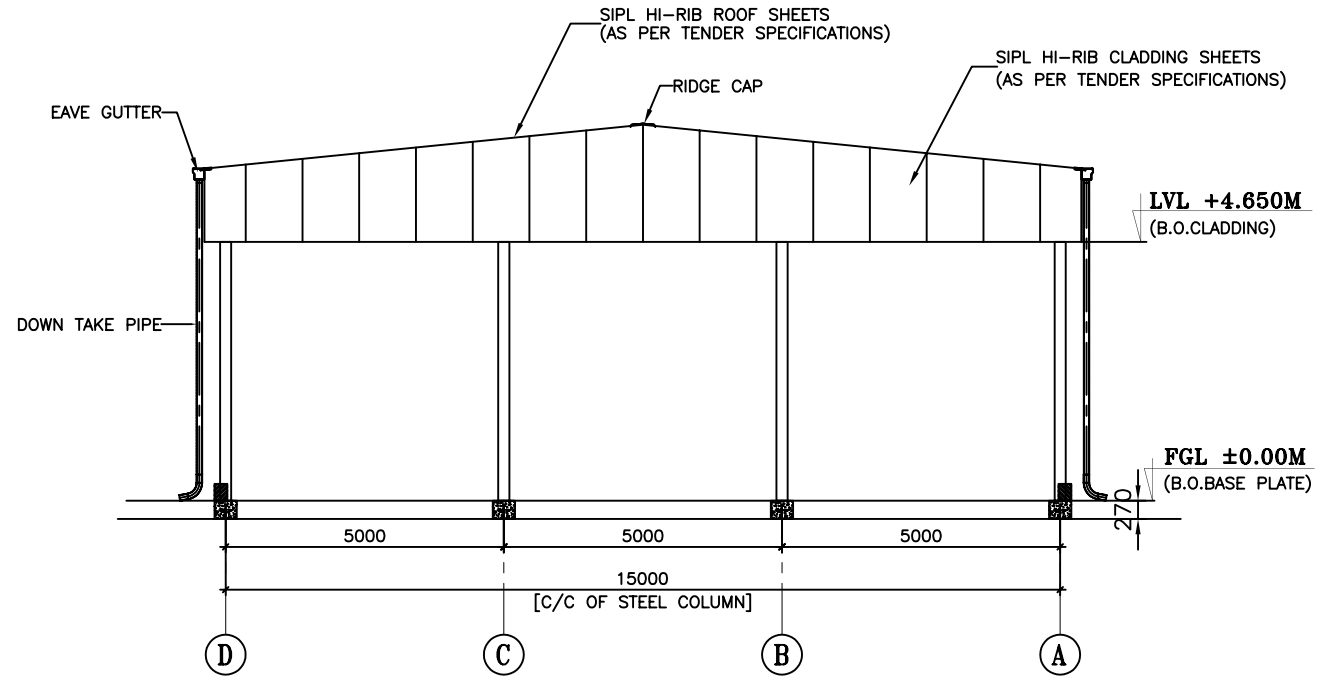

END WALL ELEVATION ALONG GRID-1(AS SHOWN)

END WALL ELEVATION ALONG GRID-11(READ MIRROR)

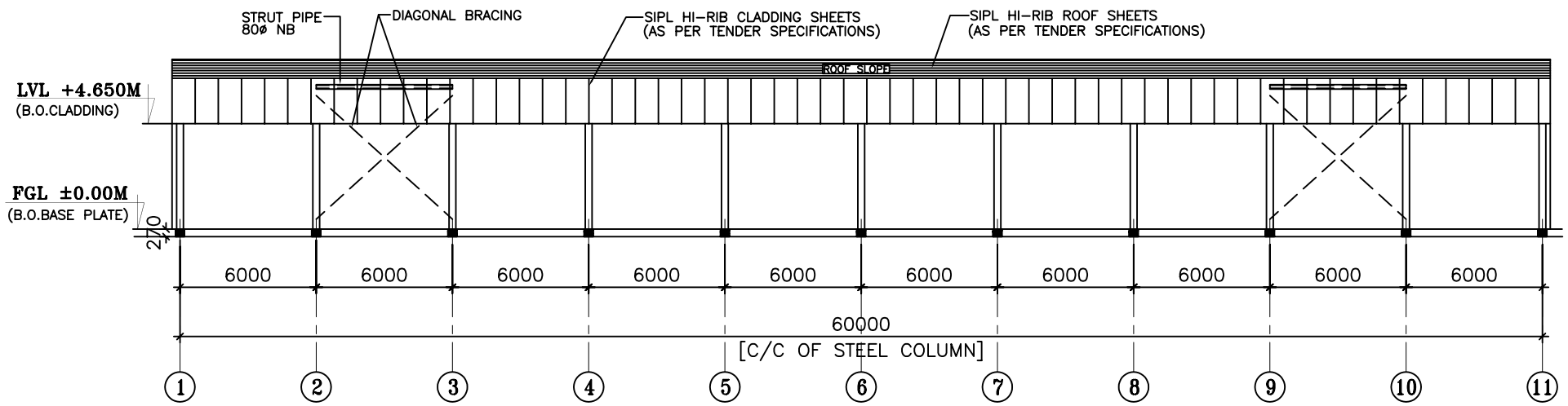

SIDE WALL ELEVATION ALONG GRID-A(AS SHOWN)

SIDE WALL ELEVATION ALONG GRID-D(READ MIRROR)

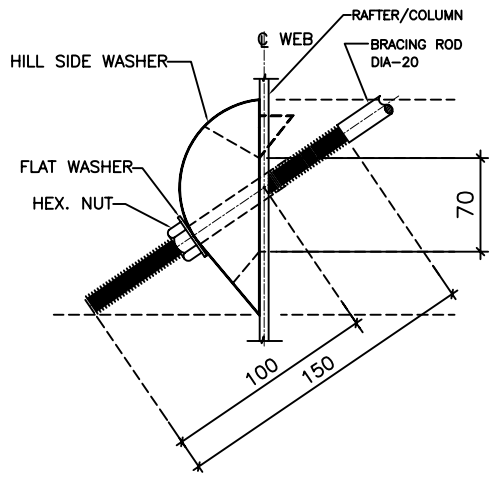

TYP 20ø ROD

BRACING FIXING DETAIL

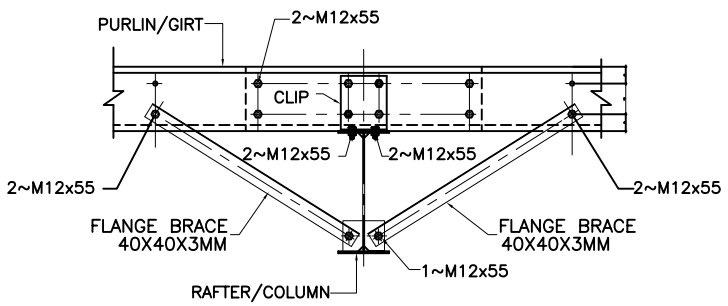

FRONT VIEW

TYPICAL FLANGE BRACE & LAP DETAIL

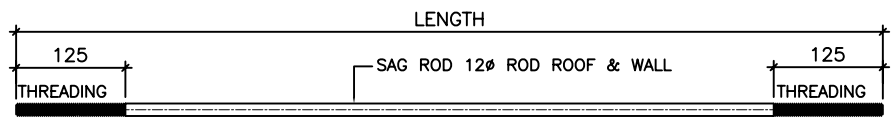

TYP. SAG ROD DETAIL

REV	REVISIONS	NAME	DATE
R3	DRAWING REVISED AS PER CLIENT'S COMMENT	A.K.GAUR	21.01.2011
R2	DRAWING REVISED AS PER CLIENT'S COMMENT	NITIN	14.01.2011
R1	DRAWING REVISED AS PER CLIENT'S COMMENT	NITIN	12.01.2011

Project: M/s. BHARAT HEAVY ELECTRICALS Ltd.

Building: (SEMI CLOSED SHED)

Drawing Title: GENERAL ARRANGEMENT DRAWING SECTION & ELEVATION AND DETAIL

Consultant: –

Client.: M/s. BHARAT HEAVY ELECTRICALS Ltd.

STEELCLAD INFRA PRIVATE LIMITED.
46 ANSAL PLAZA, VAISHALI
E- mail : business.b@steelclad.in
Ph-0120-4557400 FAX-0120-4557408

Drawn by:	NITIN NIRWAN	Scale: 1:100	Date: 04.01.2011		
Checked by:	A.K.GAUR	Project No: SIPL/J-061	Drawing No: GA-01 (Sh. 2 of 2)	Revision: R3	
Approved by:	A.SRIVASTAVA				

NOTE:–

1. All rights reserved. This drawing contains proprietary information which is protected by copyright. No part of this drawing may be reproduced, translated in computer language, or transmitted in any form whatsoever without the prior written consent of STEELCLAD INFRA PRIVATE LIMITED

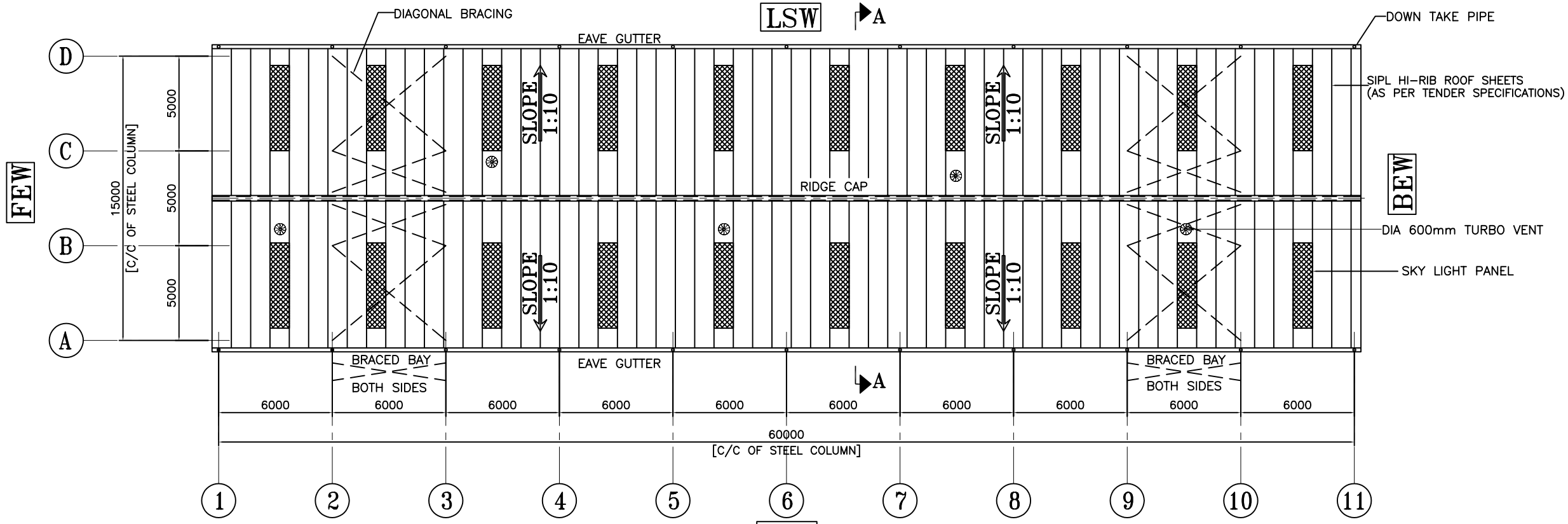

ROOF PLAN

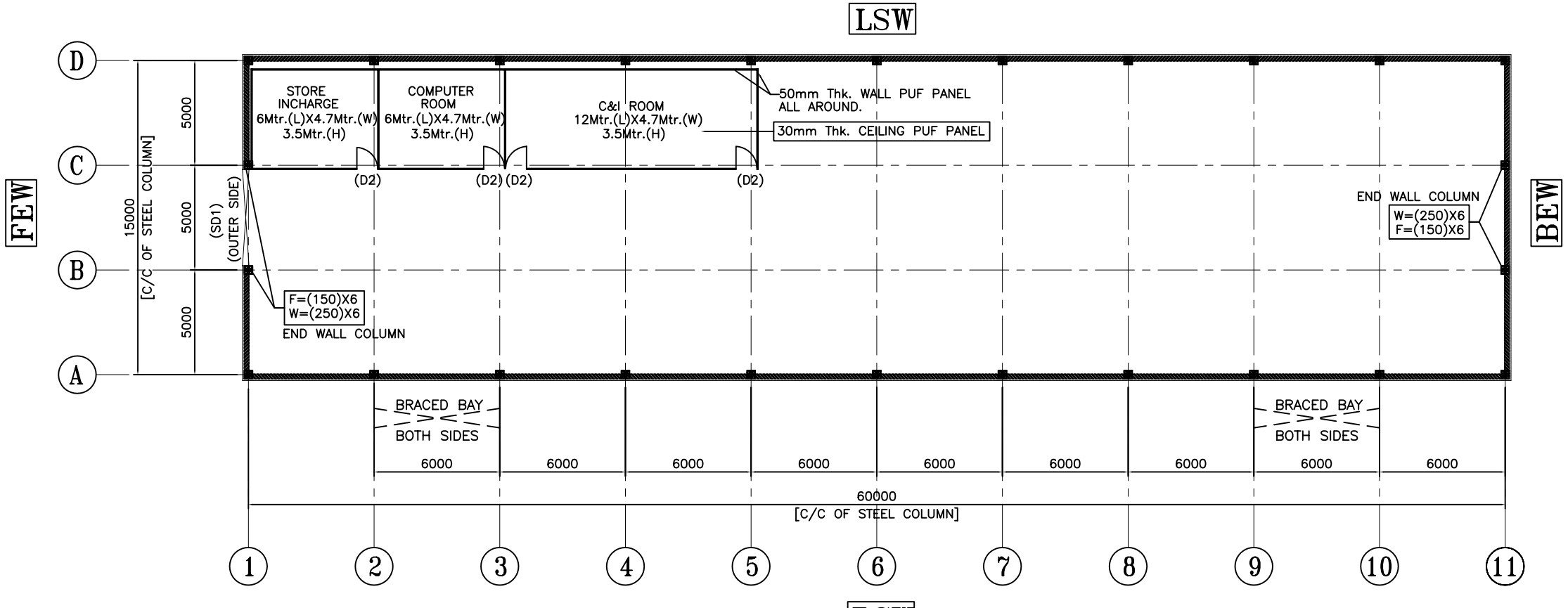

COLUMN LAYOUT PLAN

MATERIAL SPECIFICATIONS

1.	ROOFING SHEET	0.47mm. TCT SIPL HI-RIB COLOUR COATED PPGI 550 Mpa. STEEL (AS PER TENDER SPECIFICATIONS)
2.	WALL CLADDING	0.50mm. TCT SIPL HI-RIB COLOUR COATED 550 Mpa. STEEL (AS PER TENDER SPECIFICATIONS)
3.	DAY LIGHT PANEL	ROOF :- 10% ROOF AREA. (1.5mm Thk. FRP. SHEET) WALL :- NIL
4.	GUTTER	0.50mm. TCT SIPL HI-RIB COLOUR COATED 550 Mpa. STEEL (AS PER TENDER SPECIFICATIONS)
5.	FLASHINGS	0.50mm. TCT SIPL HI-RIB COLOUR COATED 550 Mpa. STEEL (AS PER TENDER SPECIFICATIONS)
6.	DOWN TAKE PIPE	HDPE 110ø PVC PIPE
7.	RIDGE VENT	NIL
8.	TURBO VENT	05 Nos. 600ø
9.	SLIDDING DOOR	[SD1] (4.6Mtr. (W) X 5Mtr. (H) 01 NOS.
10.	DOORS	[D1] (1.2Mtr. (W) X 2.1Mtr. (H) 01 NOS. (M.S. DOOR) [D2] (1Mtr. (W) X 2.1Mtr. (H) 04 NOS. (C.S.P. DOOR)
11.	WINDOWS	[W1] (3Mtr. (W) X 1.2Mtr. (H) 02 NOS.
12.	VENTILATORS	[V1] (0.60Mtr. (W) X 0.45Mtr. (H) 20 NOS.
13.	AC CUT OUT	[A1] (0.60Mtr. (W) X 0.45Mtr. (H) 02 NOS.
14.	TABLE	(AS PER TENDER SPECIFICATIONS)
15.	CHAIR	(AS PER TENDER SPECIFICATIONS)
16.	FILE CABINET	(AS PER TENDER SPECIFICATIONS)
17.	STEEL RAKE	(AS PER TENDER SPECIFICATIONS)

NOTES:-

1. ALL DIMENSIONS ARE IN MM.
2. ALL LEVEL ARE IN Mtr.
3. SIPL - STEELCLAD INFRA PVT. LTD.

FOR CLIENT USE

1. APPROVED; FABRICATION WORK MAY BE TAKEN UP.
2. APPROVED WITH COMMENTS; FABRICATION MAY BE TAKEN UP INCORPORATING COMMENTS.
3. TO BE RESUBMITTED AFTER INCORPORATING COMMENTS FOR APPROVAL.

(PLEASE TICK '✓' THE APPROPRIATE ONE)

SEAL & SIGNATURE.

REV	REVISIONS	NAME	DATE
R3	DRAWING REVISED AS PER CLIENT'S COMMENT	A.K.GAUR	21.01.2011
R2	DRAWING REVISED AS PER CLIENT'S COMMENT	NITIN	14.01.2011
R1	DRAWING REVISED AS PER CLIENT'S COMMENT	NITIN	12.01.2011

Project: M/s. BHARAT HEAVY ELECTRICALS Ltd.

Building: (CLOSED SHED WITH MM OFFICE AND C & I ROOM)

Drawing Title: GENERAL ARRANGEMENT DRAWING
ROOF PLAN & COLUMN LAYOUT PLAN

Consultant: *

Client.: M/s. BHARAT HEAVY ELECTRICALS Ltd.

STEELCLAD INFRA PRIVATE LIMITED.
46 ANSAL PLAZA, VAISHALI
E- mail : business.b@steelclad.in
Ph-0120-4557400 FAX-0120-4557408

Drawn by:	NITIN NIRWAN	Scale: 1:100	Date: 04.01.2011		
Checked by:	A.K.GAUR	Project No:	Drawing No. GA-01 (Sh. 1 of 4)	Revision: R3	
Approved by:	A.SRIVASTAVA	SIPL/J-062			

NOTE:-

1. All rights reserved. This drawing contains proprietary information which is protected by copyright. No part of this drawing may be reproduced, translated in computer language, or transmitted in any form whatsoever without the prior written consent of STEELCLAD INFRA PRIVATE LIMITED.

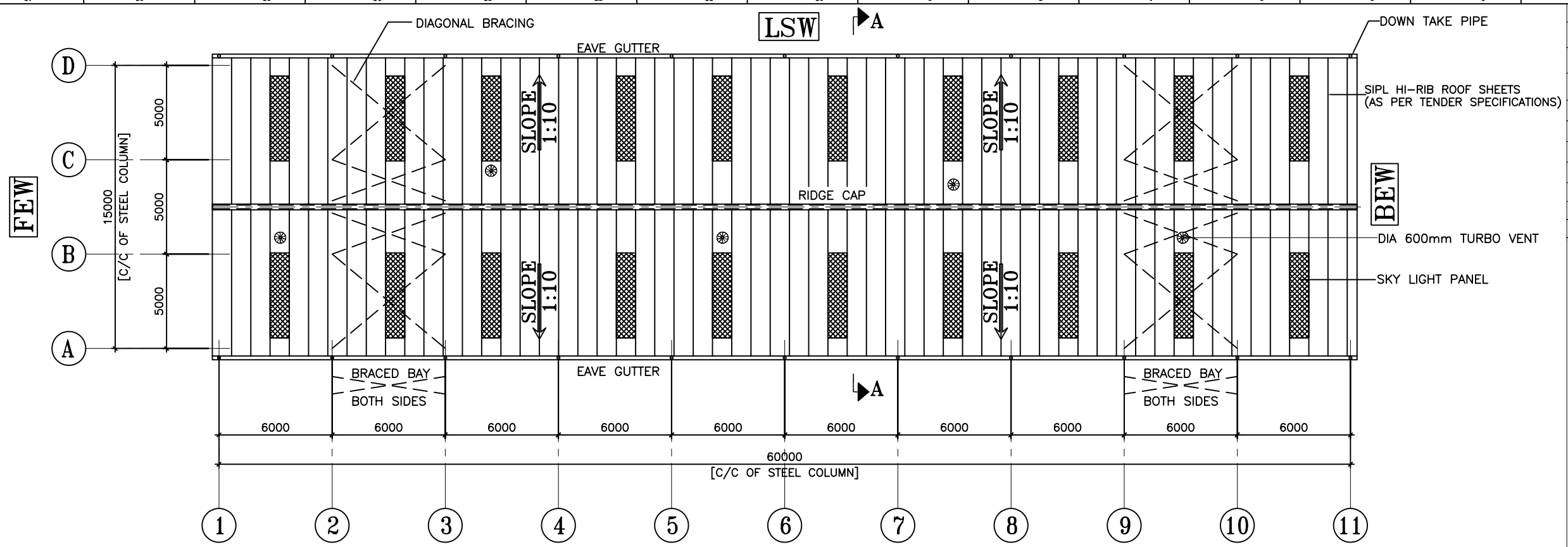

ROOF PLAN

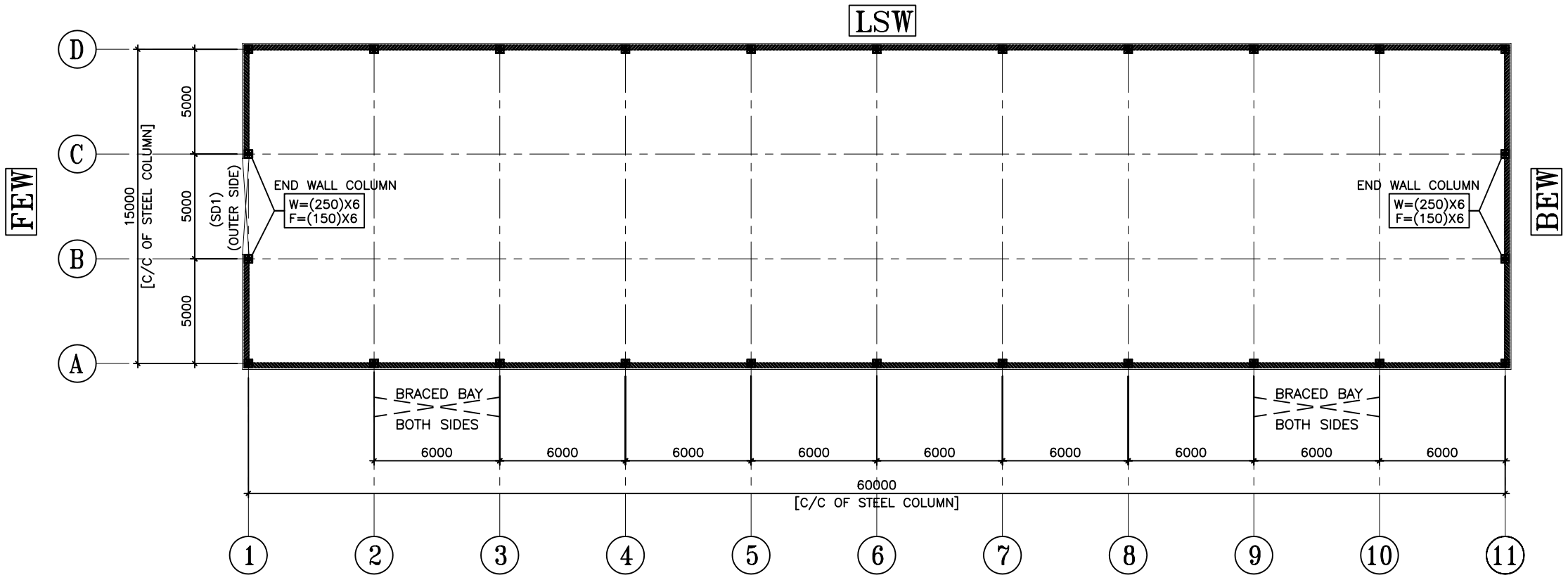

COLUMN LAYOUT PLAN

MATERIAL SPECIFICATIONS

1.	ROOFING SHEET	0.47mm. TCT SIPL HI-RIB COLOUR COATED PPGI 550 Mpa. STEEL (AS PER TENDER SPECIFICATIONS)
2.	WALL CLADDING	0.50mm. TCT SIPL HI-RIB COLOUR COATED 550 Mpa. STEEL (AS PER TENDER SPECIFICATIONS)
3.	DAY LIGHT PANEL	ROOF :- 10% ROOF AREA. (1.5mm Thk. F.R.P SHEET) WALL :- NIL
4.	GUTTER	0.50mm. TCT SIPL HI-RIB COLOUR COATED 550 Mpa. STEEL (AS PER TENDER SPECIFICATIONS)
5.	FLASHINGS	0.50mm. TCT SIPL HI-RIB COLOUR COATED 550 Mpa. STEEL (AS PER TENDER SPECIFICATIONS)
6.	DOWN TAKE PIPE	HDPE 110ø PVC PIPE
7.	TURBO VENT	05 Nos. 600ø
8.	SLIDING DOOR	[SD1] (4.5Mtr. (W) X 5Mtr. (H) 1 NOS.
9.	VENTILATORS	[V1] (0.60Mtr. (W) X 0.45Mtr. (H) 20 NOS.
10.	DOORS	[D1] (1.2Mtr. (W) X 2.1Mtr. (H) 01 NOS. (M.S. DOOR)

NOTES:-

1. ALL DIMENSIONS ARE IN MM.
2. ALL LEVEL ARE IN Mtr.
3. SIPL – STEELCLAD INFRA PVT. LTD.

FOR CLIENT USE

1. APPROVED; FABRICATION WORK MAY BE TAKEN UP.
2. APPROVED WITH COMMENTS; FABRICATION MAY BE TAKEN UP INCORPORATING COMMENTS.
3. TO BE RESUBMITTED AFTER INCORPORATING COMMENTS FOR APPROVAL.

(PLEASE TICK '✓' THE APPROPRIATE ONE)

SEAL & SIGNATURE.

REV	REVISIONS	NAME	DATE
R3	DRAWING REVISED AS PER CLIENT'S COMMENT	A.K.GAUR	21.01.2011
R2	DRAWING REVISED AS PER CLIENT'S COMMENT	NITIN	14.01.2011
R1	DRAWING REVISED AS PER CLIENT'S COMMENT	NITIN	13.01.2011

Project: M/s. BHARAT HEAVY ELECTRICALS Ltd.

Building: (CLOSED SHED)

Drawing Title: GENERAL ARRANGEMENT DRAWING
ROOF PLAN & COLUMN LAYOUT PLAN

Consultant: *

Client.: M/s. BHARAT HEAVY ELECTRICALS Ltd.

STEELCLAD INFRA PRIVATE LIMITED.
46 ANSAL PLAZA, VAISHALI
E- mail : business@steelclad.in
Ph-0120-4557400 FAX-0120-4557408

Drawn by:	NITIN NIRWAN	Scale: 1:100	Date: 04.01.2011		
Checked by:	A.K.GAUR	Project No: SIPL/2-060	Drawing No: GA-01 (Sh. 1 of 4)	Revision: R3	
Approved by:	A.SRIVASTAVA				

NOTE:-
1. All rights reserved. This drawing contains proprietary information which is protected by copyright. No part of this drawing may be reproduced, translated in computer language, or transmitted in any form whatsoever without the prior written consent of STEELCLAD INFRA PRIVATE LIMITED

A1

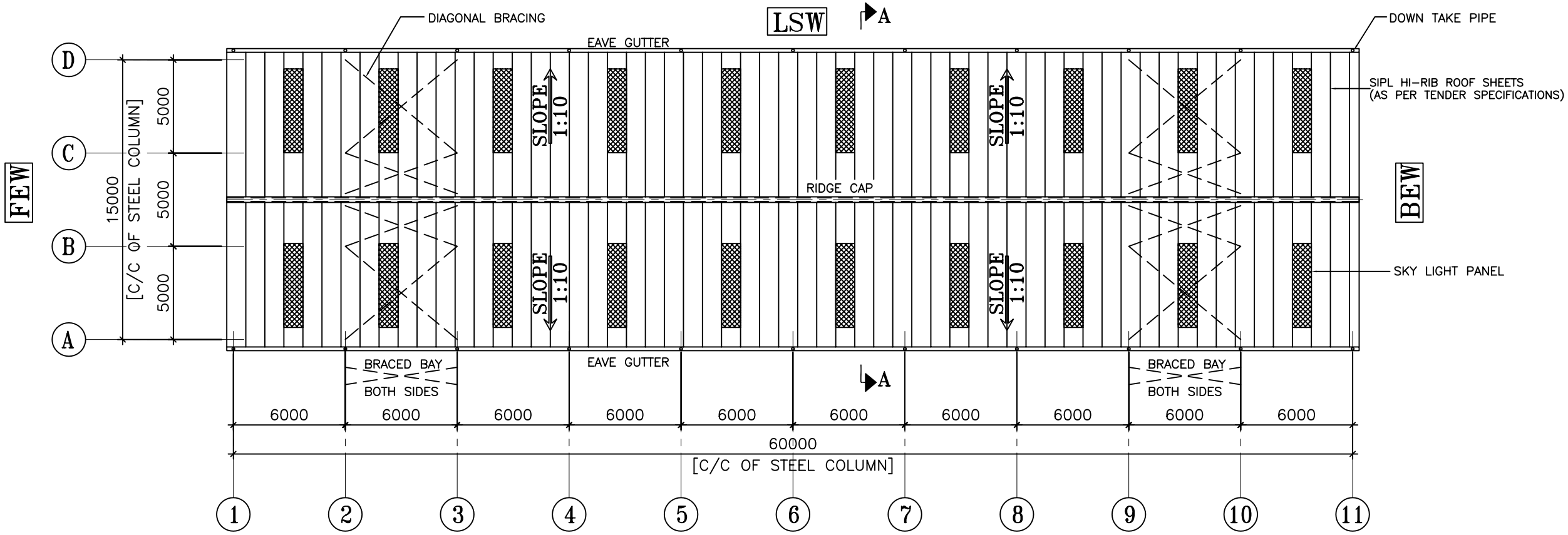

ROOF PLAN

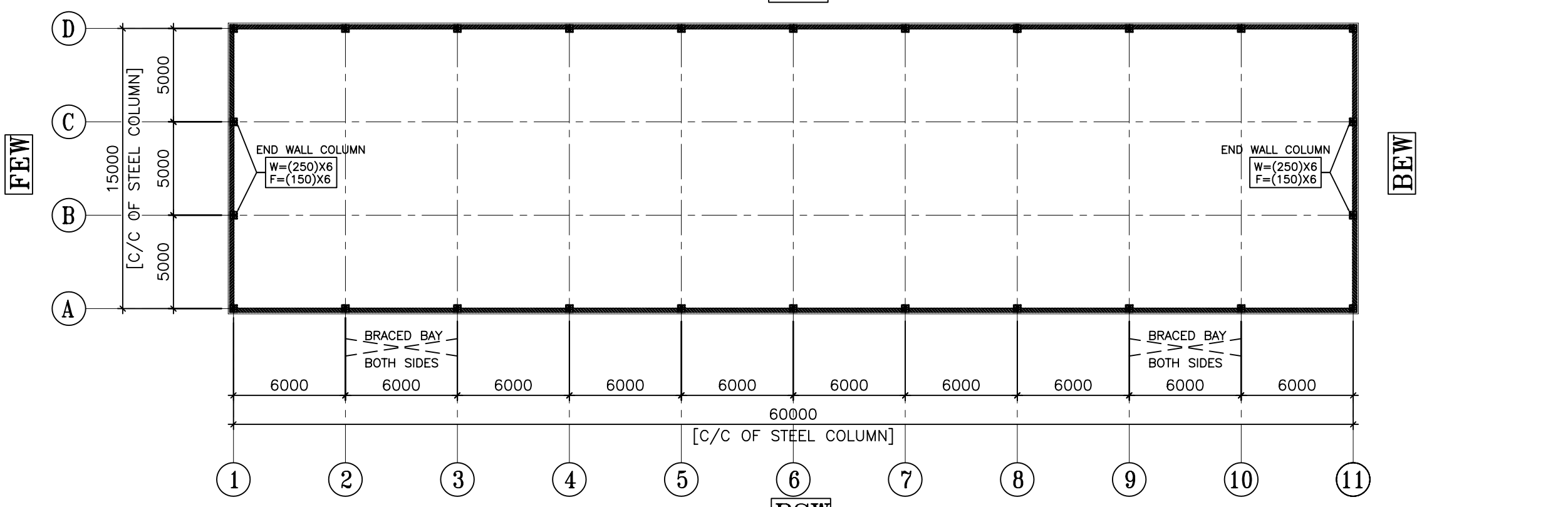

COLUMN LAYOUT PLAN

MATERIAL SPECIFICATIONS

1.	ROOFING SHEET	0.47mm. TCT SIPL HI-RIB COLOUR COATED PPGI 550 Mpa. STEEL (AS PER TENDER SPECIFICATIONS)	
2.	WALL CLADDING	0.50mm. TCT SIPL HI-RIB COLOUR COATED 550 Mpa. STEEL (AS PER TENDER SPECIFICATIONS)	
3.	DAY LIGHT PANEL	ROOF :-	10% ROOF AREA. (1.5mm Thk. FRP. SHEET)
		WALL :-	NIL
4.	GUTTER	0.50mm. TCT SIPL HI-RIB COLOUR COATED 550 Mpa. STEEL (AS PER TENDER SPECIFICATIONS)	
5.	FLASHINGS	0.50mm. TCT SIPL HI-RIB COLOUR COATED 550 Mpa. STEEL (AS PER TENDER SPECIFICATIONS)	
6.	DOWN TAKE PIPE	HDPE 110ø PVC PIPE	
7.	RIDGE VENT	NIL	
8.	FRAMED OPENING	NIL	
		NIL	
9.	TURBO VENT	NIL	

NOTES:-

1. ALL DIMENSIONS ARE IN MM.
2. ALL LEVEL ARE IN Mtr.
3. SIPL - STEELCLAD INFRA PVT. LTD.

FOR CLIENT USE

1. APPROVED; FABRICATION WORK MAY BE TAKEN UP.
2. APPROVED WITH COMMENTS; FABRICATION MAY BE TAKEN UP INCORPORATING COMMENTS.
3. TO BE RESUBMITTED AFTER INCORPORATING COMMENTS FOR APPROVAL.

(PLEASE TICK '✓' THE APPROPRIATE ONE)

SEAL & SIGNATURE.

REV	REVISIONS	NAME	DATE
R3	DRAWING REVISED AS PER CLIENT'S COMMENT	A.K.GAUR	21.01.2011
R2	DRAWING REVISED AS PER CLIENT'S COMMENT	NITIN	14.01.2011
R1	DRAWING REVISED AS PER CLIENT'S COMMENT	NITIN	13.01.2011

Project: M/s. BHARAT HEAVY ELECTRICALS Ltd.

Building: (SEMI CLOSED SHED)

Drawing Title: GENERAL ARRANGEMENT DRAWING
ROOF PLAN & COLUMN LAYOUT PLAN

Consultant: -

Client.: M/s. BHARAT HEAVY ELECTRICALS Ltd.

STEELCLAD INFRA PRIVATE LIMITED.
46 ANSAL PLAZA, VAISHALI
E- mail : business.b@steelclad.in
Ph-0120-4557400 FAX-0120-4557408

Drawn by:	NITIN NIRWAN	Scale: 1:100	Date: 04.01.2011		
Checked by:	A.K.GAUR	Project No:	Drawing No. GA-01 (Sh. 1 of 3)	Revision:	
Approved by:	A.SRIVASTAVA	SIPL/J-061		R3	

NOTE:-
1. All rights reserved. This drawing contains proprietary information which is protected by copyright. No part of this drawing may be reproduced, translated in computer language, or transmitted in any form whatsoever without the prior written consent of STEELCLAD INFRA PRIVATE LIMITED

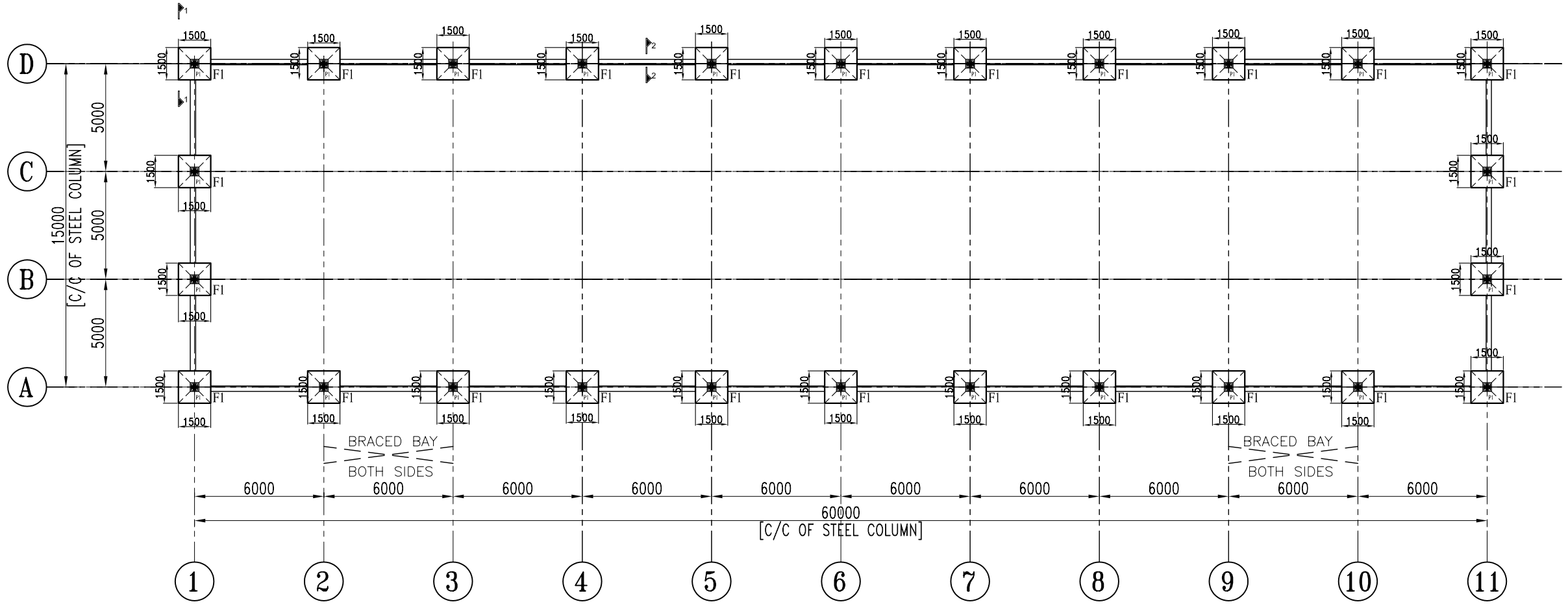

COLUMN LAY OUT & FOUNDATION PLAN OF CLOSED SHED

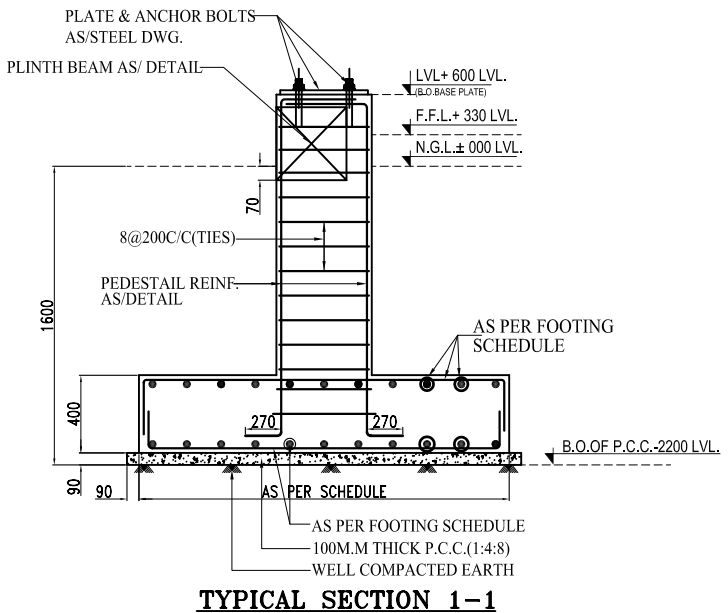

TYPICAL SECTION 1–1
FOR (FOOTING F1)

SIDE WALL PEDESTAIL DETAIL

C.MIX:–	M–20
TIES	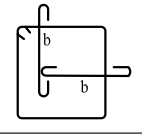
MAIN BARS	4–16ø+4–12ø(b)
SIZE	400X400
TIES	8ø @200 C/C (2 SETS)
SHAPE	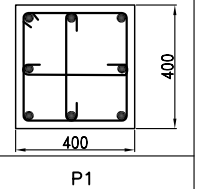
DETAIL NAME.	P1

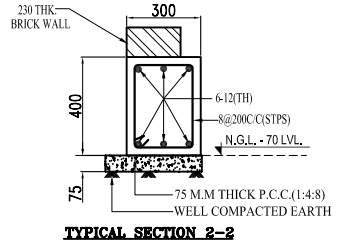

TYPICAL SECTION 2–2
FOR (300X400) PLINTH BEAM

NOTES:-

* MINIMUM DISTANCE 6Mtr. (C/C STEEL COLUMN) SHOULD BE MAINTAINED BETWEEN TWO BUILDINGS IN A SAME ROW.

FOOTING DETAIL CONC MIX. (M–20)

SR/NO.	FOOTING SIZE	REINFORCEMENT	
		TOP REINF.	BOTTOM REINF.
F1	1500x1500	10ø@200 C/C BOTHWAYS	12ø@200 C/C BOTHWAYS

1. GENERAL NOTES

1.1 FOR DIMENSIONS REFER ARCHITECTURAL DRAWINGS.
1.2 ALL THE DRAWINGS SHALL BE READ IN CONJUNCTION WITH RELEVENT ARCHITECTURAL DRAWINGS.
1.3 THE GRID DIMENSIONS SHALL BE CROSS CHECKED AND VERIFIED WITH ARCHITECTURAL DRAWINGS BEFORE LAYOUT.
1.4 ALL THE STRUCTURAL DRAWINGS MUST BE CO-ORDINATED WITH RELEVENT ARCHITECTURAL AND SERVICE DRAWINGS BEFORE EXECUTION AND ANY DISCRIPANCY FOUND IN THE DRAWINGS SHALL BE BROUGHT TO THE NOTICEOF CONSULTANTS BEFORE EXECUTION.
1.5 DRAWINGS SHOULD NOT BE SCALED ONLY FIGURED DIMENSIONS SHALL BETOLLOWED.
1.6 ALL DIMENSIONS & LEVELS INDICATED ON THE DRAWINGS ARE IN MM UNLESS SPECIFIED OTHERWISE.
1.7 PARTICULAR NOTES GIVEN ON OTHER DRAWINGS SHALL SUPERSEDE THOSE GIVEN IN THIS DRAWING.
1.8 ALL A.A.C.BLOCK MASONRY & BRICK WORK SHALL BE IN CEMENT MORTAR 1:6 (1 CEMENT, 6 COARSE SAND)
1.9 HALF BRICK WORK 115TH. BLOCK MASONRY 125/100 SHALL BE IN CEMENT MORTAR 1:4(CEMENT, 4 COARSE SAND) AND ONE BAR 6MM DIA SHALL BE PLACED IN EVERY 4TH. COURSE. IN BRICK MASONRY & 500c/c. IN BLOCK MASONRY.
1.10 UNLESS OTHERWISE SPECIFIED LEAN CONCRETE SHALL BE CEMENT CONCRETE 1:4:8(M–10)
1.11 FOUNDATIONS MUST REST ON FIRM NATURAL SOIL IN CASE OF FILL OR EXTRA EXCAVATION THE POCKET SHALL BE FILLED WITH CEMENT CONCRETE 1:5:12.
1.12 THE STANDARD DRGS SHOW TYPICAL DETAILS OF VARIOUS STRUCTURAL ELEMENTS & SHALL BE FOLLOWED ALONG WITH THE DETAILS SHOWN IN THE RESPECTIVE DRGS OF VARIOUS MEMBERS. IN CASE A SPECIFIC DETAIL IS SHOWN IN THE RESPECTIVE BUILDING DRG, THIS SHALL SUPERCEDE THE DETAIL SHOWN IN THE STANDARD DRG.

2. REINFORCED CEMENT CONCRETE

2.1 LEGENDS USED IN THE DRAWINGS:
'————' TOP BAR
'————' BOTTOM BAR
CRANKED STEEL
90° BEND DOWNWARDS OR UPWARDS IN PLAN.

'ZL'	STPS	TWO LEGGED STIRRUPS
'TH'	THROUGH BARS	
'B'	BOTTOM BAR	
'T'	TOP BAR	
'EXT.'	EXTRA BAR	
'SUPP.'	SUPPORTS	
'Ld.'	DEVELOPMENT LENGTH	
L/3	CORRESPONDING SPAN/3 LENGTH	

2.2 NOTATIONS USED FOR REINFORCEMENT DETAILS ARE:
i)Ø
–DIA OF HY.S.D BAR
ii) 2Ø 20: MEANS 2 BARS OF 20 DIA
iii) Ø10@150C/C: 2 BARS PLACED AT 150 PITCH
iv)STPS Ø8@200C/C: 8 DIA STIRRUP IN BEAMS, LINTEL & COLUMNS ETC. PLACED AT PITCH 200.

2.3 CLEAR COVER TO MAIN REINFORCEMENT SHALL BE AS FOLLOWS:
SLAB————————20MM
R.C.C.WALL————20MM
BEAMS————————25MM
COLUMNS————————40MM
FOOTINGS————————50MM(BOTTOM)

2.4 GRADE OF CONCRETE SHALL BE GRADE M–20 UNLESS NOTED OTHERWISE.
2.5 USE HIGH YIELD STRENGTH DEFORMED BARS (Fe–415) TMT BARS, AS REINFORCEMENT.
2.6 ALL THE R.C.C. WORK SHALL BE CARRIED OUT IN ACCORDANCE WITH RELEVANT CODE.
2.7 COLUMN STARTERS SHALL NOT PROVIDED UNLESS THESE ARE OF MIN.500mm LENGTH AND VIBRATED PROPERLY.
2.8 IN COLUMN NOT MORE THAN ONE THIRD OF TOTAL NO. OF MAIN BARS BE OVERLAPPED AT ANY SECTION.
2.9 ALL THE BEAM BARS MUST HAVE ANCHORAGE LENGTH EQUAL TO DEVELOPMENT LENGTH (Ld) INSIDE COLUMNS AT ENDS
2.10 DEVELOPMENT LENGTH FOR REINFORCEMENT STEEL BARS FOR GRADE, M–20 CONCRETE SHALL BE 47D (D IS DIA OF THE BAR)
2.11 REINFORCEMENT BARS IN SLABS ALONG SHORT SIDE SHALL BE PLACED IN FIRST LAYER AND ALONG LONG SIDE IN SECOND LAYER UNLESS NOTED OTHERWISE.
2.12 PROVIDE Ø 8@200C/C DISTRIBUTION BARS IN SLAB WHEREVER NOT INDICATED BUT REQUIRED AS PER ENGINEERING PRACTICES.
2.13 TOP REINFORCEMENT IN SLAB, FOUNDATIONS ETC. SHALL BE SUPPORTED BY PROVIDING ADEQUATE LAYER SPACER (CHAIRS OF ADEQUATE SIZE OF BAR) AT LEAST
1 NO. PER MT AREA IN WHICH TOP BARS HAVE BEEN PROVIDED. SUCH CHAIRS SHOULD BE FIXED TO THE MAIN REINFORCEMENT AND SHOULD NEVER BE IN DIRECT CONTACT WITH THE SHUTTERING.
2.14 MINIMUM DIAMETER OF CHAIRS FOR SLAB, SHOULD BE 10MM AND FOR FOUNDATIONS 16MM A TYPICAL CHAIRS, COULD BE AS BELOW.

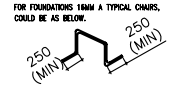

2.15 LOCATION OF CONSTRUCTION JOINTS SHALL , BE APPROVED BY ENGINEER–IN–CHARGE.THE CONCRETING OPERATION SHALL BE CARRIED OUT CONTINEOUSLY UP TO THE CONSTRUCTION JOINT.
2.16 THE SIZE AND POSITION OF MAN–HOLE , SLAB STEEL, LADDAR, INLET/OUTLET PIPES ETC. SHALL BE AS PER PLUMBING DRAWINGS, PIPE SLEEVES OF REQUIRED SIZE SHALL BE PLACED IN WALLS BEFORE CONCRETING.
2.17 FORM WORK SHALL BE REMOVED CAREFULLY SO AS NOT TO CAUSE ANY VIBRATION THAT MAY DAMAGE REINFORCED CONCRETE.
2.18 THE CENTERING SUPPORTING CANTILEVERS, CANOPY, OVERHANGS ETC. MUST BE RETAINED TILL MAXIMUM COUNTER WEIGHT OVER THE BEARING HAS BEEN ATTAINED.
2.19 SHUTTERING OF CANTILEVER SLAB / BEAMS SHALL BE REMOVED STARTING FROM THE OVERHANGING EDGE.
2.20 SPACER SHOULD BE PROVIDED IN BETWEEN VERTICAL BARS IN R.C.C. WALLS IT CAN BE, U–BARS OR HOOKED BAR.

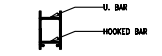

2.21 THE VERCHDKEL ORDER SHALL BEDESHUTTERED ONLY AFTER COMPLETE GIRDER, (ie BOTTOM & TOP CHORES) IS CAST & CURED
2.22 PROVIDE SPACER BARS @25 @600C/C BETWEEN TWO LAYERS OF REINFORCEMENT IN BEAMS.
2.23 CONVENTIONS FOLLOWED IN DRAWINGS CALLING OUT REINFORCING SHEET ARE AS FOLLOWS:–

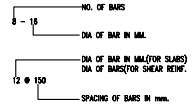

3. SCHEDULE OF CON. MIX.

DEVELOPMENT LENGTH

3.1 DEVELOPMENT LENGTH (Fe–415)

CON. MIX:–	Ld (Fe–415)
M–20	#–47
M–25	#–40
M–30	#–36
M–35	#–33
M–40	#–30

3.2 DEVELOPMENT LENGTH (Fe–500)

CON. MIX:–	Ld (Fe–415)
M–20	#–57
M–25	#–49
M–30	#–45
M–35	#–40
M–40	#–38

ALL DIMENSIONS ARE IN— M.M.

APPLICABLE CODE:–

SR.NO.	CODE
1	IS 456 :– CODE OF PRACTICE FOR PLAIN & REINFORCED CONCRETE
2	IS 8112 :– 43 GRADE ORDINARY PORTLAND CEMENT
3	IS 383 :– COURSE AND FIND AGGREGATE FORM NATURAL SOURCES OF CONCRETE
5	IS 34 :– HAND BOOK ON CONCRETE REINFORCEMENT AND DETAILING

REV	REVISIONS	NAME	DATE

Project: M/s. BHARAT HEAVY ELECTRICALS Ltd.

Buildings: CLOSED SHED WITH OFFICE AND C&I ROOM

Drawing Title: FOUNDATION PLAN

Client.: M/s. BHARAT HEAVY ELECTRICALS Ltd.

STEELCLAD INFRA PRIVATE LIMITED.
46 ANSAL PLAZA, VAISHALI
E- mail : business.b@steelclad.in
Ph-0120-4557400 FAX-0120-4557408

Drawn by:	–	Scale: 1:175	Date: 21/01/2011		
Checked by:	–	Project No:	Drawing No: FD–01 (Sh. 1 of 1)	Revision:	
Approved by:	–	SIPL–J–082		R0	

NOTE:–

1. All rights reserved. This drawing contains proprietary information which is protected by copyright. No part of this drawing may be reproduced, translated in computer language, or transmitted in any form whatsoever without the prior written consent of STEEL CLAD INFRA PVT LTD.

A1

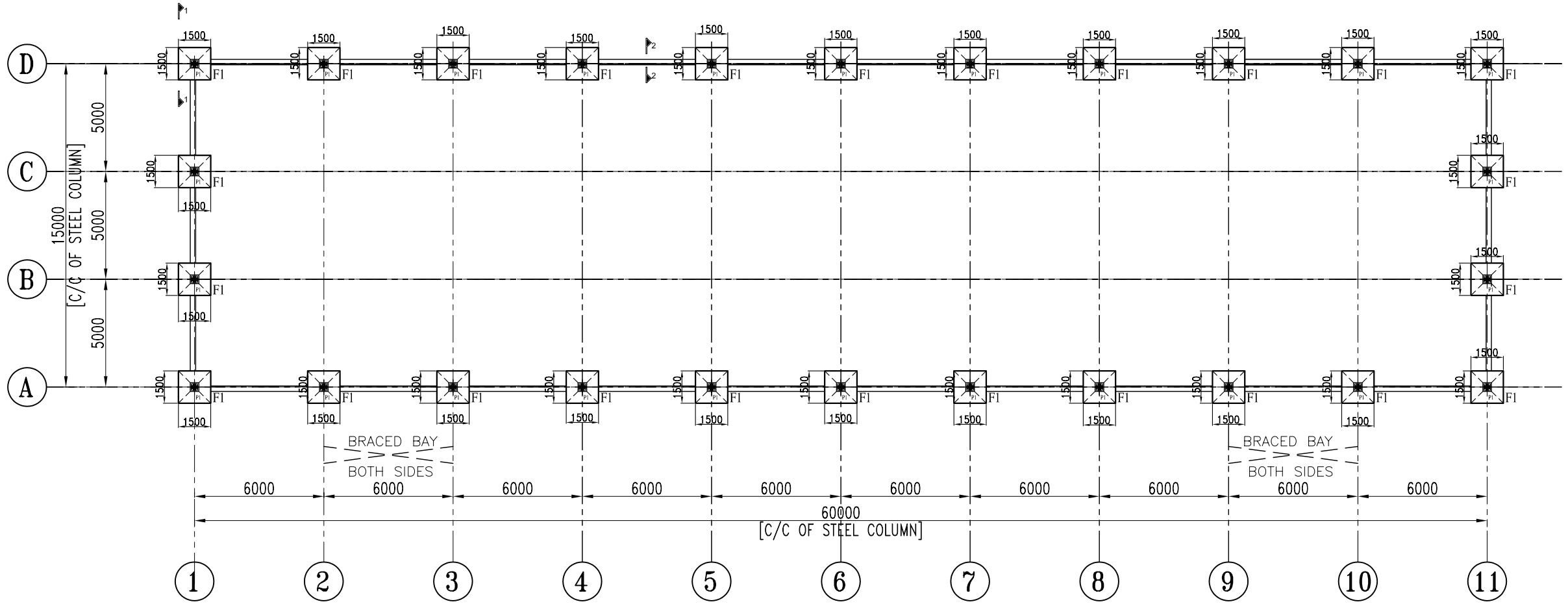

COLUMN LAY OUT & FOUNDATION PLAN OF SEMI CLOSED SHED

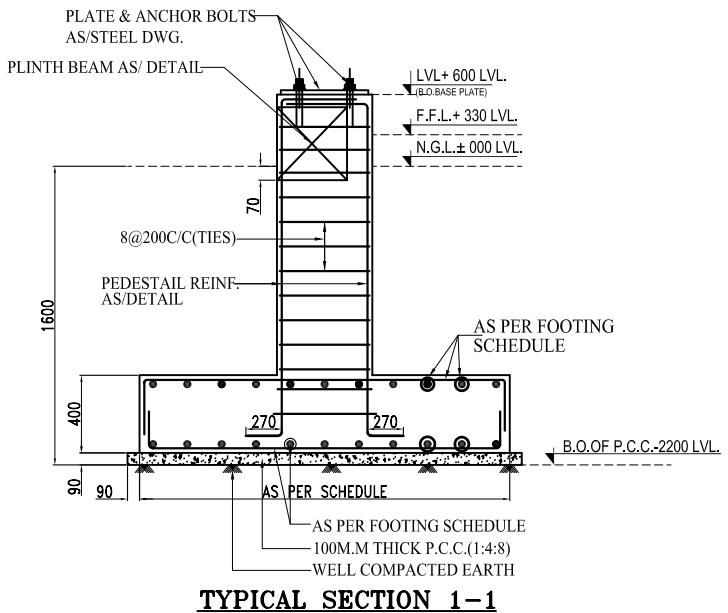

TYPICAL SECTION 1–1 FOR (FOOTING F1)

SIDE WALL PEDESTAIL DETAIL

C.MIX:–	M–20
TIES	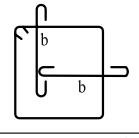
MAIN BARS	4–16ø+4–12ø(b)
SIZE	400X400
TIES	8ø @200 C/C (2 SETS)
SHAPE	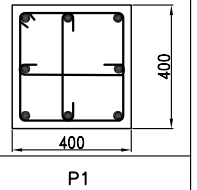
DETAIL NAME.	P1

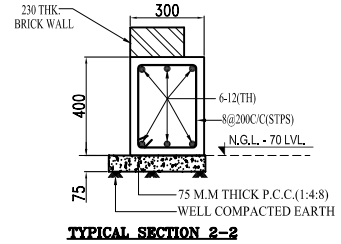

TYPICAL SECTION 2–2 FOR (300X400) PLINTH BEAM

NOTES:-

* MINIMUM DISTANCE 6Mtr. (C/C STEEL COLUMN) SHOULD BE MAINTAINED BETWEEN TWO BUILDINGS IN A SAME ROW.

FOOTING DETAIL CONC MIX. (M–20)

SR/NO.	FOOTING SIZE	REINFORCEMENT	
		TOP REINF.	BOTTOM REINF.
F1	1500x1500	10ø@200 C/C BOTHWAYS	12ø@200 C/C BOTHWAYS

1. GENERAL NOTES

1.1 FOR DIMENSIONS REFER ARCHITECTURAL DRAWINGS.

1.2 ALL THE DRAWINGS SHALL BE READ IN CONJUNCTION WITH RELEVENT ARCHITECTURAL DRAWINGS.

1.3 THE GRID DIMENSIONS SHALL BE CROSS CHECKED AND VERIFIED WITH ARCHITECTURAL DRAWINGS BEFORE LAYOUT.

1.4 ALL THE STRUCTURAL DRAWINGS MUST BE CO-ORDINATED WITH RELEVENT ARCHITECTURAL AND SERVICE DRAWINGS BEFORE EXECUTION AND ANY DISCRIPANCY FOUND IN THE DRAWINGS SHALL BE BROUGHT TO THE NOTICEOF CONSULTANTS BEFORE EXECUTION.

1.5 DRAWINGS SHOULD NOT BE SCALED ONLY FIGURED DIMENSIONS SHALL BETOLLOWED.

1.6 ALL DIMENSIONS & LEVELS INDICATED ON THE DRAWINGS ARE IN MM UNLESS SPECIFIED OTHERWISE.

1.7 PARTICULAR NOTES GIVEN ON OTHER DRAWINGS SHALL SUPERSEDE THOSE GIVEN IN THIS DRAWING.

1.8 ALL A.A.C.BLOCK MASONRY & BRICK WORK SHALL BE IN CEMENT MORTAR 1:6 (1 CEMENT, 6 COARSE SAND)

1.9 HALF BRICK WORK 115TH. BLOCK MASONRY 125/100 SHALL BE IN CEMENT MORTAR 1:4(CEMENT, 4 COARSE SAND) AND ONE BAR 6MM DIA SHALL BE PLACED IN EVERY 4TH. COURSE. IN BRICK MASONRY & 500c/c. IN BLOCK MASONRY.

1.10 UNLESS OTHERWISE SPECIFIED LEAN CONCRETE SHALL BE CEMENT CONCRETE 1:4:8(M–10)

1.11 FOUNDATIONS MUST REST ON FIRM NATURAL SOIL IN CASE OF FILL OR EXTRA EXCAVATION THE POCKET SHALL BE FILLED WITH CEMENT CONCRETE 1:5:12.

1.12 THE STANDARD DRGS SHOW TYPICAL DETAILS OF VARIOUS STRUCTURAL ELEMENTS & SHALL BE FOLLOWED ALONG WITH THE DETAILS SHOWN IN THE RESPECTIVE DRGS OF VARIOUS MEMBERS. IN CASE A SPECIFIC DETAIL IS SHOWN IN THE RESPECTIVE BUILDING DRG, THIS SHALL SUPERCEDE THE DETAIL SHOWN IN THE STANDARD DRG.

2. REINFORCED CEMENT CONCRETE

2.1 LEGENDS USED IN THE DRAWINGS:

'————' TOP BAR
'————' BOTTOM BAR
CRANKED STEEL
90° BEND DOWNWARDS OR UPWARDS IN PLAN.

'ZL'	STPS	TWO LEGGED STIRRUPS
'TH'	THROUGH BARS	
'B'	BOTTOM BAR	
'T'	TOP BAR	
'EXT.'	EXTRA BAR	
'SUPP.'	SUPPORTS	
'Ld.'	DEVELOPMENT LENGTH	
L/3	CORRESPONDING SPAN/3 LENGTH	

2.2 NOTATIONS USED FOR REINFORCEMENT DETAILS ARE:
i)Ø
–DIA OF HY.S.D BAR
ii) 2Ø 20: MEANS 2 BARS OF 20 DIA
iii) @100+150C/C: 2 BARS PLACED AT 150 PITCH
iv)STPS @ØØ200C/C: 8 DIA STIRRUP IN BEAMS, LINTEL & COLUMNS ETC. PLACED AT PITCH 200.

2.3 CLEAR COVER TO MAIN REINFORCEMENT SHALL BE AS FOLLOWS:
SLAB————————20MM
R.C.C.WALL————20MM
BEAMS————————25MM
COLUMNS————————40MM
FOOTINGS————————50MM(BOTTOM)

2.4 GRADE OF CONCRETE SHALL BE GRADE M–20 UNLESS NOTED OTHERWISE.

2.5 USE HIGH YIELD STRENGTH DEFORMED BARS (Fe–415) TMT BARS, AS REINFORCEMENT.

2.6 ALL THE R.C.C. WORK SHALL BE CARRIED OUT IN ACCORDANCE WITH RELEVANT CODE.

2.7 COLUMN STARTERS SHALL NOT PROVIDED UNLESS THESE ARE OF MIN.500mm LENGTH AND VIBRATED PROPERLY.

2.8 IN COLUMN NOT MORE THAN ONE THIRD OF TOTAL NO. OF MAIN BARS BE OVERLAPPED AT ANY SECTION.

2.9 ALL THE BEAM BARS MUST HAVE ANCHORAGE LENGTH EQUAL TO DEVELOPMENT LENGTH (Ld) INSIDE COLUMNS AT ENDS

2.10 DEVELOPMENT LENGTH FOR REINFORCEMENT STEEL BARS FOR GRADE, M–20 CONCRETE SHALL BE 47D (D IS DIA OF THE BAR)

2.11 REINFORCEMENT BARS IN SLABS ALONG SHORT SIDE SHALL BE PLACED IN FIRST LAYER AND ALONG LONG SIDE IN SECOND LAYER UNLESS NOTED OTHERWISE.

2.12 PROVIDE@ØØ200C/C DISTRIBUTION BARS IN SLAB WHEREVER NOT INDICATED BUT REQUIRED AS PER ENGINEERING PRACTICES.

2.13 TOP REINFORCEMENT IN SLAB, FOUNDATIONS ETC. SHALL BE SUPPORTED BY PROVIDING ADEQUATE LATER SPACER (CHAIRS OF ADEQUATE SIZE OF BAR) AT LEAST
1 NO. PER MT AREA IN WHICH TOP BARS HAVE BEEN PROVIDED. SUCH CHAIRS SHOULD BE FIXED TO THE MAIN REINFORCEMENT AND SHOULD NEVER BE IN DIRECT CONTACT WITH THE SHUTTERING.

2.14 MINIMUM DIAMETER OF CHAIRS FOR SLAB, SHOULD BE 10MM AND FOR FOUNDATIONS 16MM A TYPICAL CHAIRS, COULD BE AS BELOW.

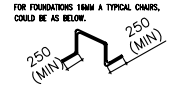

2.15 LOCATION OF CONSTRUCTION JOINTS SHALL , BE APPROVED BY ENGINEER–IN–CHARGE.THE CONCRETING OPERATION SHALL BE CARRIED OUT CONTINEOUSLY UP TO THE CONSTRUCTION JOINT.

2.16 THE SIZE AND POSITION OF MAN–HOLE , SLAB STEEL, LADDAR, INLET/OUTLET PIPES ETC. SHALL BE AS PER PLUMBING DRAWINGS, PIPE SLEEVES OF REQUIRED SIZE SHALL BE PLACED IN WALLS BEFORE CONCRETING.

2.17 FORM WORK SHALL BE REMOVED CAREFULLY SO AS NOT TO CAUSE ANY VIBRATION THAT MAY DAMAGE REINFORCED CONCRETE.

2.18 THE CENTERING SUPPORTING CANTILEVERS, CANOPY, OVERHANGS ETC. MUST BE RETAINED TILL MAXIMUM COUNTER WEIGHT OVER THE BEARING HAS BEEN ATTAINED.

2.19 SHUTTERING OF CANTILEVER SLAB / BEAMS SHALL BE REMOVED STARTING FROM THE OVERHANGING EDGE.

2.20 SPACER SHOULD BE PROVIDED IN BETWEEN VERTICAL BARS IN R.C.C. WALLS IT CAN BE, U–BARS OR HOOKED BAR.

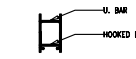

2.21 THE VERCHDKEL ORDER SHALL BEDESHUTTERED ONLY AFTER COMPLETE GRIDER. (ie BOTTOM & TOP CHORES) IS CAST & CURED

2.22 PROVIDE SPACER BARS @25 @800C/C BETWEEN TWO LAYERS OF REINFORCEMENT IN BEAMS.

2.23 CONVENTIONS FOLLOWED IN DRAWINGS CALLING OUT REINFORCING STEEL ARE AS FOLLOWS:–

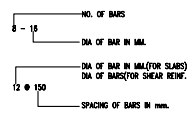

3. SCHEDULE OF CON. MIX.

DEVELOPMENT LENGTH

3.1 DEVELOPMENT LENGTH (Fe–415)

CON. MIX:–	Ld (Fe–415)
M–20	#–47
M–25	#–40
M–30	#–38
M–35	#–33
M–40	#–30

3.2 DEVELOPMENT LENGTH (Fe–500)

CON. MIX:–	Ld (Fe–415)
M–20	#–57
M–25	#–49
M–30	#–45
M–35	#–40
M–40	#–38

ALL DIMENSIONS ARE IN— M.M.

APPLICABLE CODE:–

SR.NO.	CODE
1	IS 456 :– CODE OF PRACTICE FOR PLAIN & REINFORCED CONCRETE
2	IS 8112 :– 43 GRADE ORDINARY PORTLAND CEMENT
3	IS 383 :– COURSE AND FINO AGGREGATE FORM NATURAL SOURCES OF CONCRETE
5	IS 34 :– HAND BOOK ON CONCRETE REINFORCEMENT AND DETAILING

REV	REVISIONS	NAME	DATE

Project: M/s. BHARAT HEAVY ELECTRICALS Ltd.

Buildings: SEMI CLOSED SHED

Drawing Title: FOUNDATION PLAN

Client.: M/s. BHARAT HEAVY ELECTRICALS Ltd.

STEELCLAD INFRA PRIVATE LIMITED.
46 ANSAL PLAZA, VAISHALI
E- mail : business.b@steelclad.in
Ph-0120-4557400 FAX-0120-4557408

Drawn by:	–	Scale: 1:175	Date: 21/01/2011		
Checked by:	–	Project No: SIPL–J–081	Drawing No: FD–01 (Sh. 1 of 1)	Revision: R0	
Approved by:	–				

NOTE:–

1. All rights reserved. This drawing contains proprietary information which is protected by copyright. No part of this drawing may be reproduced, translated in computer language, or transmitted in any form whatsoever without the prior written consent of STEEL CLAD INFRA PVT LTD.

A1

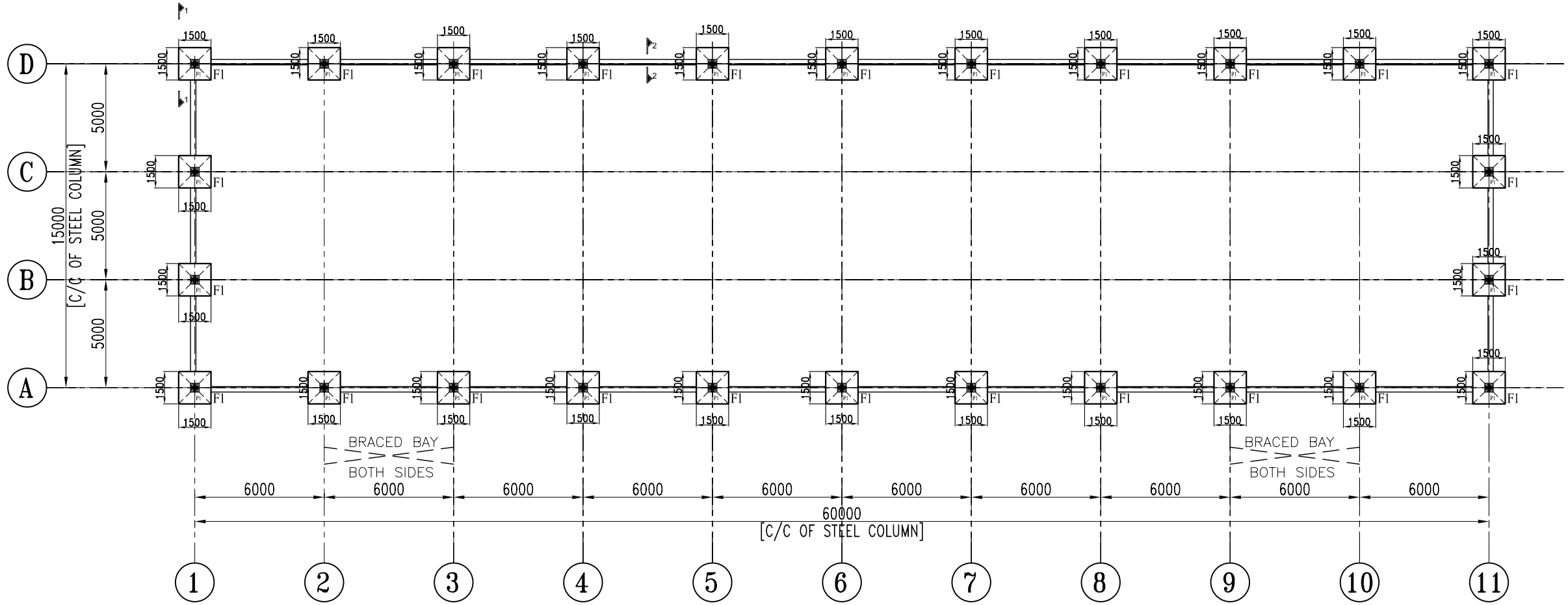

COLUMN LAY OUT & FOUNDATION PLAN OF CLOSED SHED

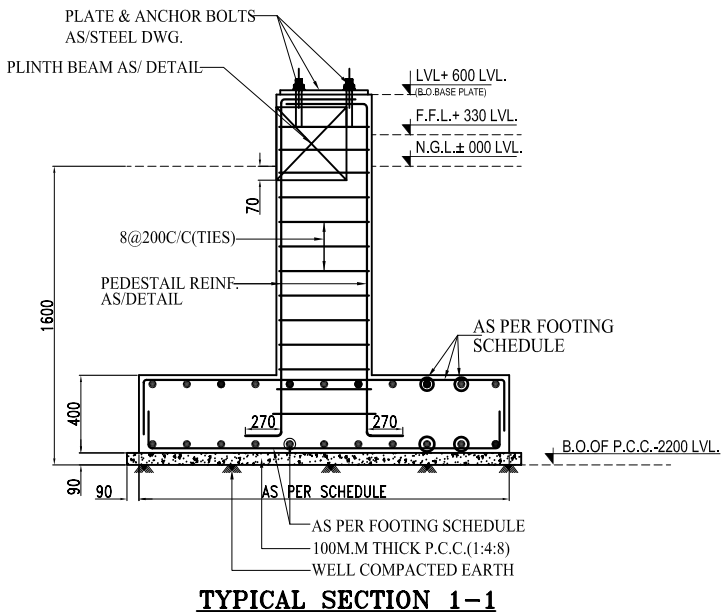

TYPICAL SECTION 1-1 FOR (FOOTING F1)

SIDE WALL PEDESTAIL DETAIL

C.MIX:-	M-20
TIES	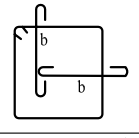
MAIN BARS	4-16ø+4-12ø(b)
SIZE	400X400
TIES	8ø @200 C/C (2 SETS)
SHAPE	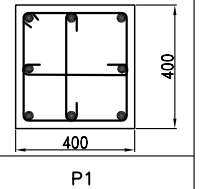
DETAIL NAME.	P1

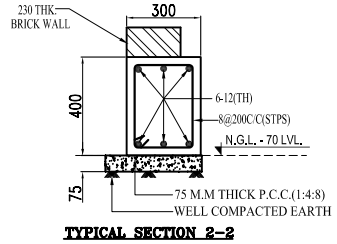

TYPICAL SECTION 2-2 FOR (300X400) PLINTH BEAM

NOTES:-

* MINIMUM DISTANCE 6Mtr. (C/C STEEL COLUMN) SHOULD BE MAINTAINED BETWEEN TWO BUILDINGS IN A SAME ROW.

FOOTING DETAIL CONC MIX. (M-20)

SR/NO.	FOOTING SIZE	REINFORCEMENT	
		TOP REINF.	BOTTOM REINF.
F1	1500x1500	10ø@200 C/C BOTHWAYS	12ø@200 C/C BOTHWAYS

1. GENERAL NOTES

1.1 FOR DIMENSIONS REFER ARCHITECTURAL DRAWINGS.

1.2 ALL THE DRAWINGS SHALL BE READ IN CONJUNCTION WITH RELEVENT ARCHITECTURAL DRAWINGS.

1.3 THE GRID DIMENSIONS SHALL BE CROSS CHECKED AND VERIFIED WITH ARCHITECTURAL DRAWINGS BEFORE LAYOUT.

1.4 ALL THE STRUCTURAL DRAWINGS MUST BE CO-ORDINATED WITH RELEVENT ARCHITECTURAL AND SERVICE DRAWINGS BEFORE EXECUTION AND ANY DISCRIPANCY FOUND IN THE DRAWINGS SHALL BE BROUGHT TO THE NOTICEOF CONSULTANTS BEFORE EXECUTION.

1.5 DRAWINGS SHOULD NOT BE SCALED ONLY FIGURED DIMENSIONS SHALL BEFOLLOWED.

1.6 ALL DIMENSIONS & LEVELS INDICATED ON THE DRAWINGS ARE IN MM UNLESS SPECIFIED OTHERWISE.

1.7 PARTICULAR NOTES GIVEN ON OTHER DRAWINGS SHALL SUPERSEDE THOSE GIVEN IN THIS DRAWING.

1.8 ALL A.A.C.BLOCK MASONRY & BRICK WORK SHALL BE IN CEMENT MORTAR 1:6 (1 CEMENT, 6 COARSE SAND)

1.9 HALF BRICK WORK 115TH. BLOCK MASONRY 125/100 SHALL BE IN CEMENT MORTAR 1:4(CEMENT, 4 COARSE SAND) AND ONE BAR 6MM DIA SHALL BE PLACED IN EVERY 4TH. COURSE. IN BRICK MASONRY & 500c/c. IN BLOCK MASONRY.

1.10 UNLESS OTHERWISE SPECIFIED LEAN CONCRETE SHALL BE CEMENT CONCRETE 1:4:8(M-10)

1.11 FOUNDATIONS MUST REST ON FIRM NATURAL SOIL IN CASE OF FILL OR EXTRA EXCAVATION THE POCKET SHALL BE FILLED WITH CEMENT CONCRETE 1:5:12.

1.12 THE STANDARD DRGS SHOW TYPICAL DETAILS OF VARIOUS STRUCTURAL ELEMENTS & SHALL BE FOLLOWED ALONG WITH THE DETAILS SHOWN IN THE RESPECTIVE DRGS OF VARIOUS MEMBERS. IN CASE A SPECIFIC DETAIL IS SHOWN IN THE RESPECTIVE BUILDING DRG, THIS SHALL SUPERCEDE THE DETAIL SHOWN IN THE STANDARD DRG.

2. REINFORCED CEMENT CONCRETE

2.1 LEGENDS USED IN THE DRAWINGS:

'----------' TOP BAR
'- - - - - - - - - -' BOTTOM BAR
CRANKED STEEL
90° BEND DOWNWARDS OR UPWARDS IN PLAN.

'ZL'	STPS	TWO LEGGED STIRRUPS
'THr'	THROUGH BARS	
'B'	BOTTOM BAR	
'T'	TOP BAR	
'EXT.'	EXTRA BAR	
'SUPP.'	SUPPORTS	
'Ld.'	DEVELOPMENT LENGTH	
L/3	CORRESPONDING SPAN/3 LENGTH	

2.2 NOTATIONS USED FOR REINFORCEMENT DETAILS ARE:
i)Ø
-DIA OF HY.S.D BAR

ii) 2Ø 20:	MEANS 2 BARS OF 20 DIA
iii) Ø10@150C/C:	2 BARS PLACED AT 150 PITCH
iv)STPS Ø8@200C/C:	8 DIA STIRRUP IN BEAMS, LINTEL & COLUMNS ETC. PLACED AT PITCH 200.

2.3 CLEAR COVER TO MAIN REINFORCEMENT SHALL BE AS FOLLOWS:

SLAB	20MM
R.C.C.WALL	20MM
BEAMS	25MM
COLUMNS	40MM
FOOTINGS	50MM(BOTTOM)

2.4 GRADE OF CONCRETE SHALL BE GRADE M-20 UNLESS NOTED OTHERWISE.

2.5 USE HIGH YIELD STRENGTH DEFORMED BARS (Fe-415) TMT BARS, AS REINFORCEMENT.

2.6 ALL THE R.C.C. WORK SHALL BE CARRIED OUT IN ACCORDANCE WITH RELEVANT CODE.

2.7 COLUMN STARTERS SHALL NOT PROVIDED UNLESS THESE ARE OF MIN.500mm LENGTH AND VIBRATED PROPERLY.

2.8 IN COLUMN NOT MORE THAN ONE THIRD OF TOTAL NO. OF MAIN BARS BE OVERLAPPED AT ANY SECTION.

2.9 ALL THE BEAM BARS MUST HAVE ANCHORAGE LENGTH EQUAL TO DEVELOPMENT LENGTH (Ld) INSIDE COLUMNS AT ENDS

2.10 DEVELOPMENT LENGTH FOR REINFORCEMENT STEEL BARS FOR GRADE, M-20 CONCRETE SHALL BE 47D (D IS DIA OF THE BAR)

2.11 REINFORCEMENT BARS IN SLABS ALONG SHORT SIDE SHALL BE PLACED IN FIRST LAYER AND ALONG LONG SIDE IN SECOND LAYER UNLESS NOTED OTHERWISE.

2.12 PROVIDE Ø 8@200C/C DISTRIBUTION BARS IN SLAB WHEREVER NOT INDICATED BUT REQUIRED AS PER ENGINEERING PRACTICES.

2.13 TOP REINFORCEMENT IN SLAB, FOUNDATIONS ETC. SHALL BE SUPPORTED BY PROVIDING ADEQUATE LAYER SPACER (CHAIRS OF ADEQUATE SIZE OF BAR) AT LEAST
1 NO. PER MT AREA IN WHICH TOP BARS HAVE BEEN PROVIDED. SUCH CHAIRS SHOULD BE FIXED TO THE MAIN REINFORCEMENT AND SHOULD NEVER BE IN DIRECT CONTACT WITH THE SHUTTERING.

2.14 MINIMUM DIAMETER OF CHAIRS FOR SLAB, SHOULD BE 10MM AND FOR FOUNDATIONS 16MM A TYPICAL CHAIRS, COULD BE AS BELOW.

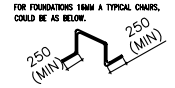

2.15 LOCATION OF CONSTRUCTION JOINTS SHALL , BE APPROVED BY ENGINEER-IN-CHARGE.THE CONCRETING OPERATION SHALL BE CARRIED OUT CONTINEOUSLY UP TO THE CONSTRUCTION JOINT.

2.16 THE SIZE AND POSITION OF MAN-HOLE , SLAB STEEL, LADDAR, INLET/OUTLET PIPES ETC. SHALL BE AS PER PLUMBING DRAWINGS, PIPE SLEEVES OF REQUIRED SIZE SHALL BE PLACED IN WALLS BEFORE CONCRETING.

2.17 FORM WORK SHALL BE REMOVED CAREFULLY SO AS NOT TO CAUSE ANY VIBRATION THAT MAY DAMAGE REINFORCED CONCRETE.

2.18 THE CENTERING SUPPORTING CANTILEVERS, CANOPY, OVERHANGS ETC. MUST BE RETAINED TILL MAXIMUM COUNTER WEIGHT OVER THE BEARING HAS BEEN ATTAINED.

2.19 SHUTTERING OF CANTILEVER SLAB / BEAMS SHALL BE REMOVED STARTING FROM THE OVERHANGING EDGE.

2.20 SPACER SHOULD BE PROVIDED IN BETWEEN VERTICAL BARS IN R.C.C. WALLS IT CAN BE, U-BARS OR HOOKED BAR.

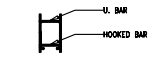

2.21 THE VERCHICKEL GIRDER SHALL BEDESHUTTERED ONLY AFTER COMPLETE GIRDER. (ie BOTTOM & TOP CHORES) IS CAST & CURED

2.22 PROVIDE SPACER BARS @25 Ø800C/C BETWEEN TWO LAYERS OF REINFORCEMENT IN BEAMS.

2.23 CONVENTIONS FOLLOWED IN DRAWINGS CALLING OUT REINFORCING STEEL ARE AS FOLLOWS:-

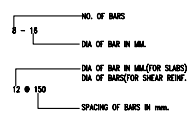

3. SCHEDULE OF CON. MIX.

DEVELOPMENT LENGTH

3.1 DEVELOPMENT LENGTH (Fe-415)

CON. MIX:-	Ld (Fe-415)
M-20	#-47
M-25	#-40
M-30	#-38
M-35	#-33
M-40	#-30

3.2 DEVELOPMENT LENGTH (Fe-500)

CON. MIX:-	Ld (Fe-415)
M-20	#-57
M-25	#-49
M-30	#-45
M-35	#-40
M-40	#-38

ALL DIMENSIONS ARE IN— M.M.

APPLICABLE CODE:-

SR.NO.	CODE
1	IS 456 :- CODE OF PRACTICE FOR PLAIN & REINFORCED CONCRETE
2	IS 8112 :- 43 GRADE ORDINARY PORTLAND CEMENT
3	IS 383 :- COURSE AND FINO AGGREGATE FORM NATURAL SOURCES OF CONCRETE
5	IS 34 :- HAND BOOK ON CONCRETE REINFORCEMENT AND DETAILING

REV	REVISIONS	NAME	DATE

Project: M/s. BHARAT HEAVY ELECTRICALS Ltd.

Buildings: CLOSED SHED

Drawing Title: FOUNDATION PLAN

Client.: M/s. BHARAT HEAVY ELECTRICALS Ltd.

STEELCLAD INFRA PRIVATE LIMITED.
46 ANSAL PLAZA, VAISHALI
E- mail : business.b@steelclad.in
Ph-0120-4557400 FAX-0120-4557408

Drawn by:	-	Scale: 1:175	Date: 21/01/2011		
Checked by:	-	Project No:	Drawing No: FD-01 (Sh. 1 of 1)	Revision:	
Approved by:	-	SIPL-J-080		R0	

NOTE:-

1. All rights reserved. This drawing contains proprietary information which is protected by copyright. No part of this drawing may be reproduced, translated in computer language, or transmitted in any form whatsoever without the prior written consent of STEEL CLAD INFRA PVT LTD.

A1

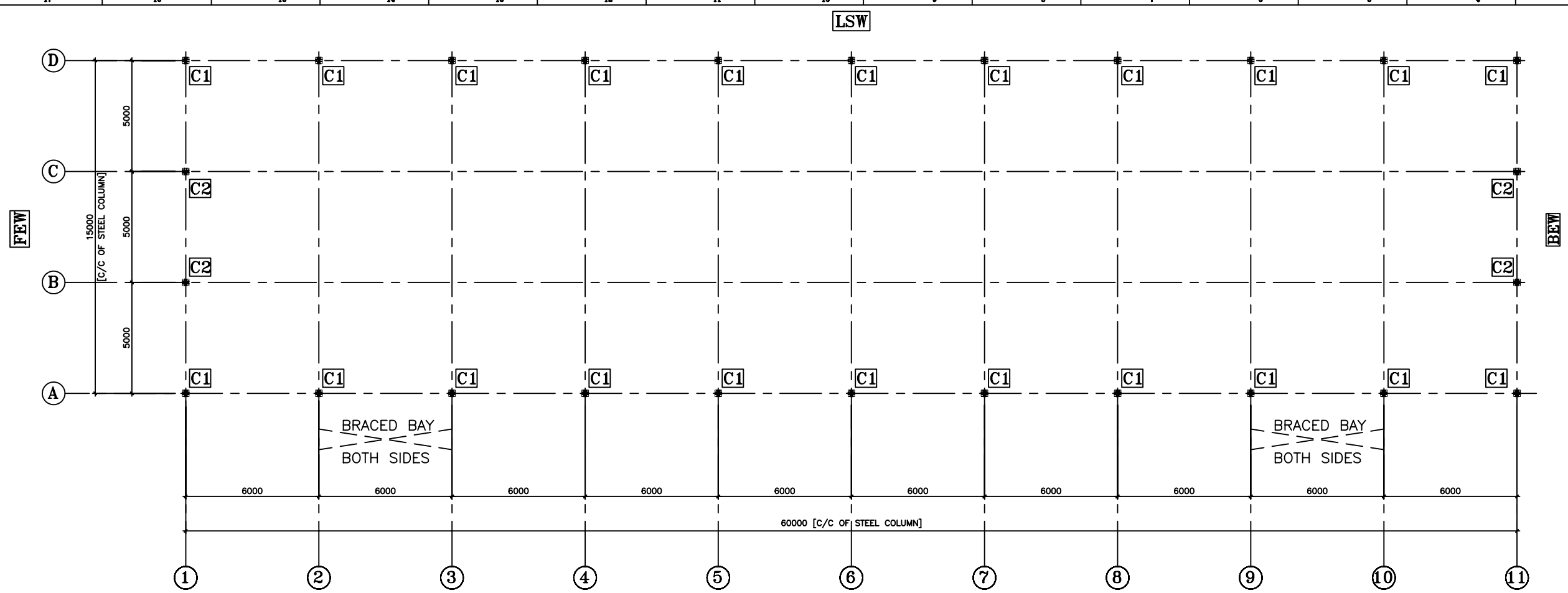

COLUMN LAYOUT PLAN

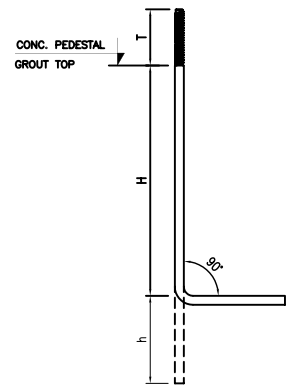

ANCHOR BOLT SCHEDULE

BOLT DESCRIPTION	USAGE	DIA.	H	h	T
AB 20X750	END FRAME	20	750	150	100
AB 20X750	MAIN FRAME	20	750	150	100

T=THREADED LENGTH

FOR CLIENT USE

1. APPROVED; FABRICATION WORK MAY BE TAKEN UP.
2. APPROVED WITH COMMENTS; FABRICATION MAY BE TAKEN UP INCORPORATING COMMENTS.
3. TO BE RESUBMITTED AFTER INCORPORATING COMMENTS FOR APPROVAL.

(PLEASE TICK ' ✓ ' THE APPROPRIATE ONE)

SEAL & SIGNATURE.

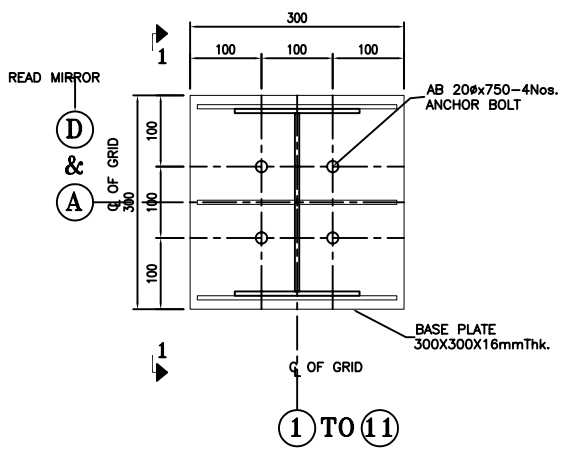

DETAIL-C1

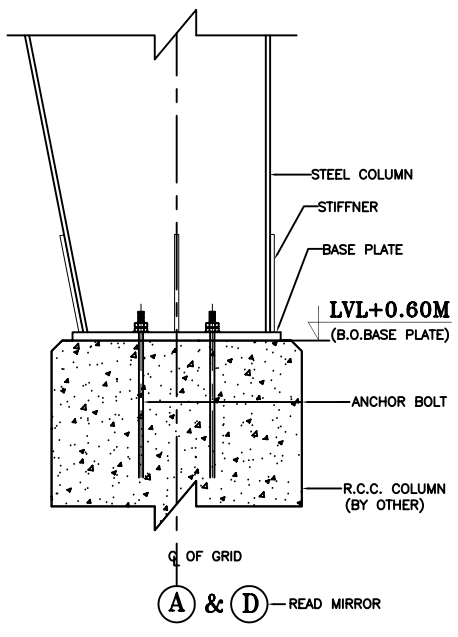

SECTION 1-1

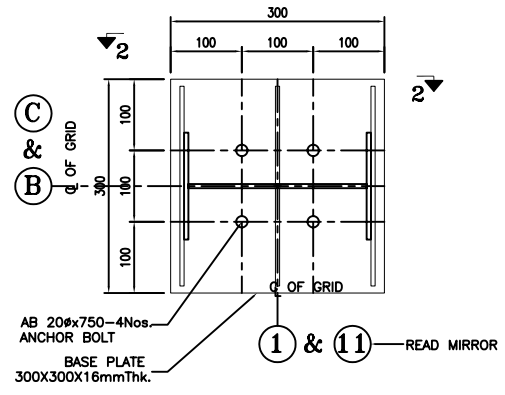

DETAIL-C2

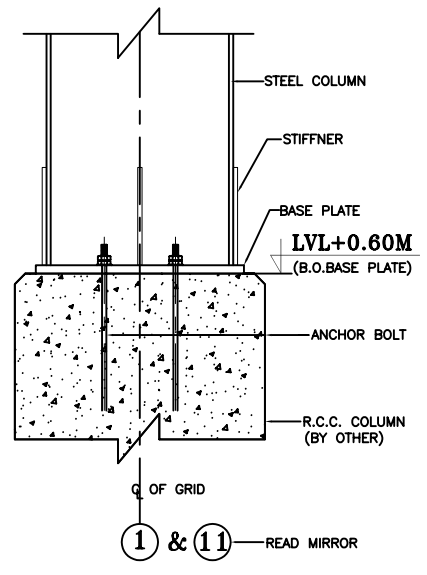

SECTION 2-2

NOTES:-

1. ALL DIMENSIONS ARE IN MM.

REV	REVISIONS	NAME	DATE
R3	DRAWING REVISED AS PER CLIENT'S COMMENT	A.K.GAUR	21.01.2011
R2	DRAWING REVISED AS PER CLIENT'S COMMENT	NITIN	14.01.2011
R1	DRAWING REVISED AS PER CLIENT'S COMMENT	NITIN	13.01.2011

Project: M/s. BHARAT HEAVY ELECTRICALS Ltd.

Building: (CLOSED SHED WITH MM OFFICE AND C & I ROOM)

Drawing Title: ANCHOR BOLT DRAWING (SECTION & DETAILS)

Consultant: –

Client.: M/s. BHARAT HEAVY ELECTRICALS Ltd.

STEELCLAD INFRA PRIVATE LIMITED.
46 ANSAL PLAZA, VAISHALI
E- mail: business.b@steelclad.in
Ph-01204557400 FAX-1204557408

Drawn by:	NITIN NIRWAN	Scale: 1:125	Date: 04.01.2011	
Checked by:	A.K.GAUR	Project No:	Drawing No: AB-01 (Sh. 1 of 1)	Revision: R3
Approved by:	A.SRIVASTAVA	SIPL/J-062		

NOTE:-
1. All rights reserved. This drawing contains proprietary information which is protected by copyright. No part of this drawing may be reproduced, translated in computer language, or transmitted in any form whatsoever without the prior written consent of STEELCLAD INFRA PRIVATE LIMITED

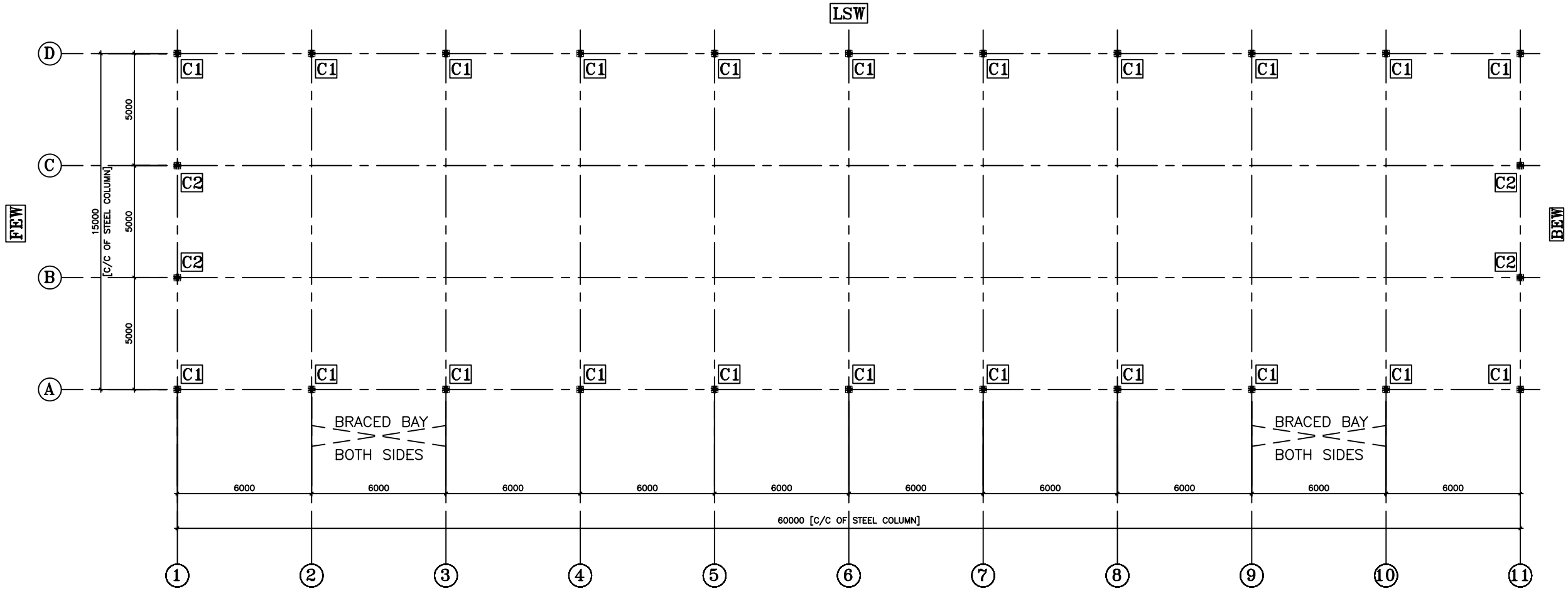

COLUMN LAYOUT PLAN

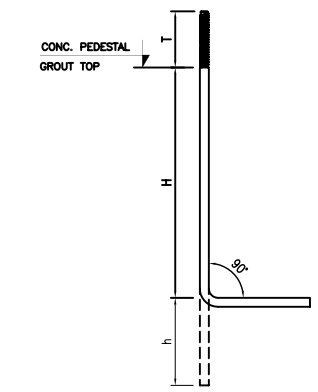

ANCHOR BOLT SCHEDULE

BOLT DESCRIPTION	USAGE	DIA.	H	h	T
AB 20X750	END FRAME	20	750	150	100
AB 20X750	MAIN FRAME	20	750	150	100

T=THREADED LENGTH

FOR CLIENT USE

1. APPROVED; FABRICATION WORK MAY BE TAKEN UP.
2. APPROVED WITH COMMENTS; FABRICATION MAY BE TAKEN UP INCORPORATING COMMENTS.
3. TO BE RESUBMITTED AFTER INCORPORATING COMMENTS FOR APPROVAL.

(PLEASE TICK ' ✓ ' THE APPROPRIATE ONE)

SEAL & SIGNATURE.

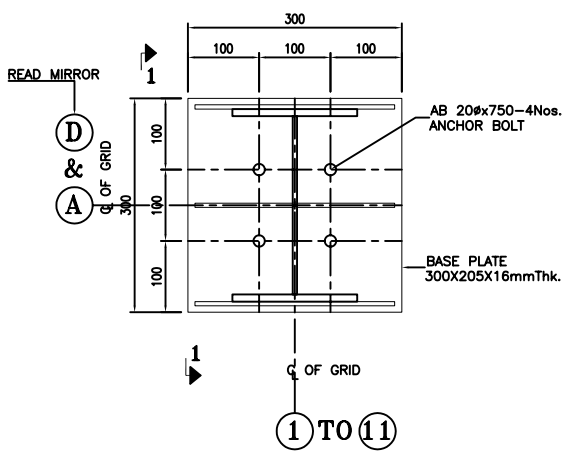

DETAIL–C1

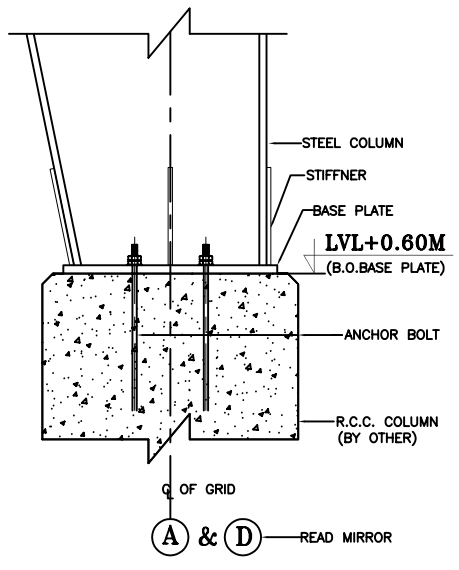

SECTION 1–1

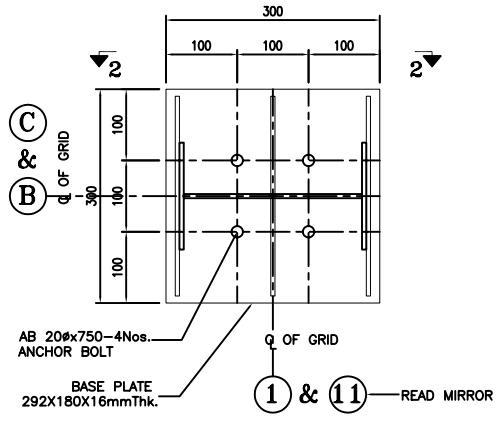

DETAIL–C2

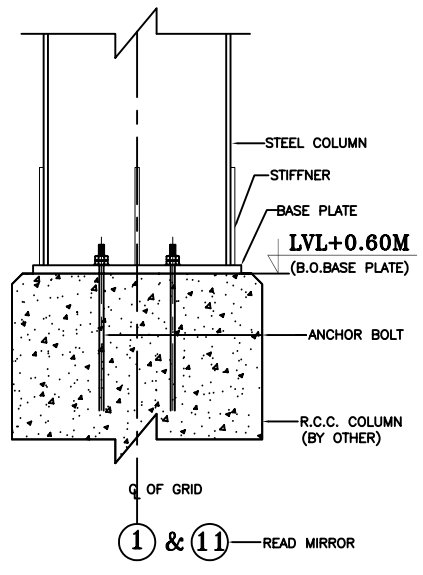

SECTION 2–2

NOTES:–

1. ALL DIMENSIONS ARE IN MM.

REV	REVISIONS	NAME	DATE
R3	DRAWING REVISED AS PER CLIENT'S COMMENT	A.K.GAUR	21.01.2011
R2	DRAWING REVISED AS PER CLIENT'S COMMENT	NITIN	14.01.2011
R1	DRAWING REVISED AS PER CLIENT'S COMMENT	NITIN	13.01.2011

Project: M/s. BHARAT HEAVY ELECTRICALS Ltd.

Building: (SEMI CLOSED SHED)

Drawing Title: ANCHOR BOLT DRAWING (SECTION & DETAILS)

Consultant: –

Client.: M/s. BHARAT HEAVY ELECTRICALS Ltd.

STEELCLAD INFRA PRIVATE LIMITED.
46 ANSAL PLAZA, VAISHALI
E- mail: business.b@steelclad.in
Ph-01204557400 FAX-1204557408

Drawn by: NITIN NIRWAN	Scale: 1:125	Date: 04.01.2011	
Checked by: A.K.GAUR	Project No:	Drawing No: AB–01 (Sh. 1 of 1)	Revision: R3
Approved by: A.SRIVASTAVA	SIPL/J–061		

NOTE:–

1. All rights reserved. This drawing contains proprietary information which is protected by copyright. No part of this drawing may be reproduced, translated in computer language, or transmitted in any form whatsoever without the prior written consent of STEELCLAD INFRA PRIVATE LIMITED

FIRST ANGLE PROJECTION

ALL DIMENSIONS ARE IN MM

DRAWING NO.

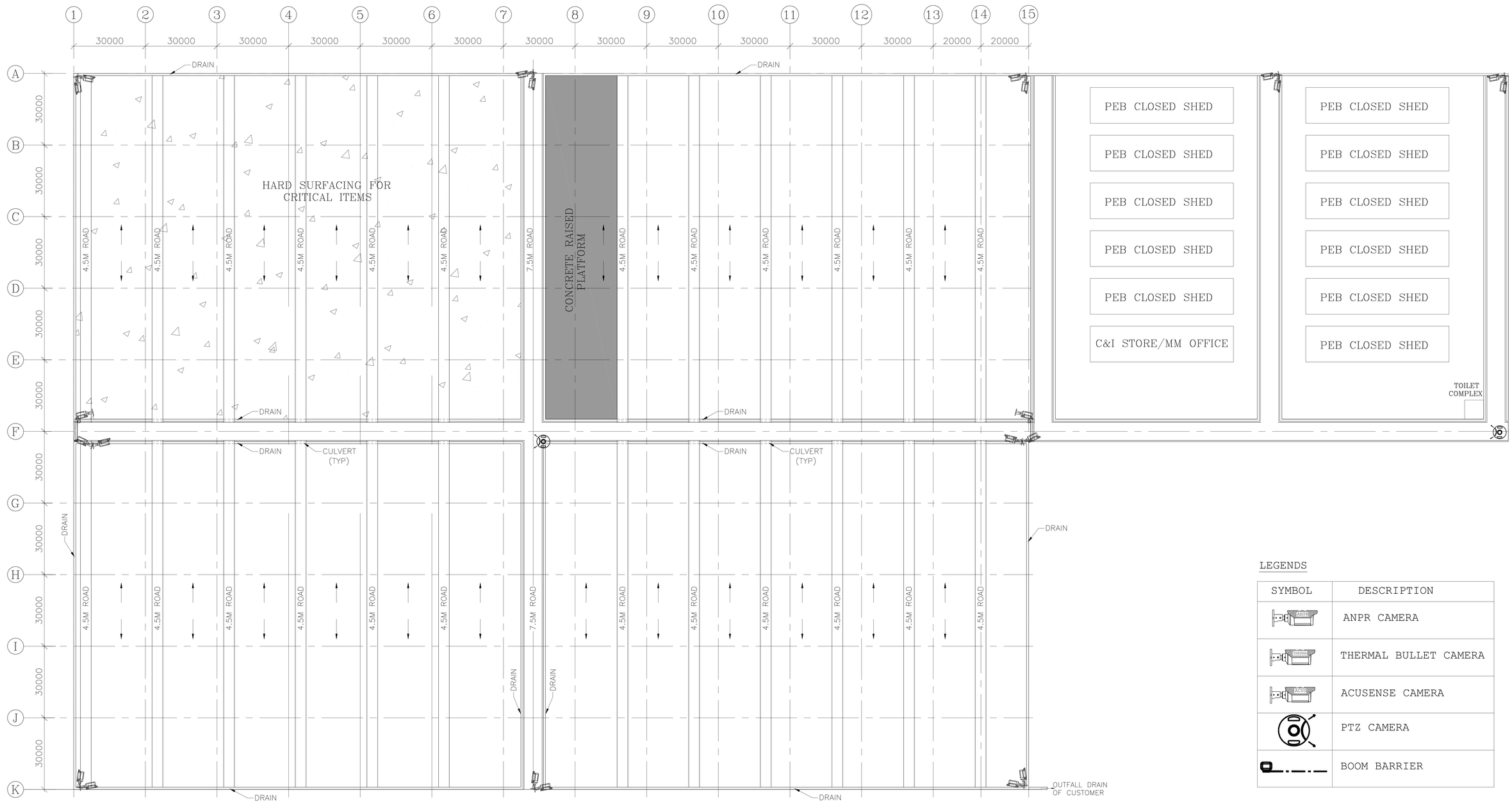

LEGENDS

SYMBOL	DESCRIPTION
ANPR	ANPR CAMERA
THERMAL	THERMAL BULLET CAMERA
ACUSENSE	ACUSENSE CAMERA
	PTZ CAMERA
	BOOM BARRIER

TYPICAL LAYOUT PLAN OF OPEN STORE YARD & CLOSED SHED

COPYRIGHT AND CONFIDENTIAL
The information on this document is the property of BHARAT HEAVY ELECTRICALS LIMITED
is must not be used directly or indirectly in any way detrimental to the interest of the company.

REV	DESCRIPTION	DESN	DRN	CHD	APPD

CONSULTANT:

CLIENT:

PROJECT: STANDARDIZATION OF PROJECT INFRASTRUCTURE FACILITIES

CONTRACTOR
BHARAT HEAVY ELECTRICALS LTD
POWER SECTOR

TITLE: TYPICAL LAYOUT PLAN OF OPEN STORE YARD & CLOSED SHED

SCALE

DRAWING NO.

RELEASED FOR: ☐ PRELIMINARY ☐ TENDER ☐ INFORMATION ☐ APPROVAL ☐ CONSTRUCTION

	NAME	DATE
DRN		
DESN		
CHD		
APPD		

SHEET OF REV.

PROJECTION

FORMAT SIZE A0

FIRST ANGLE PROJECTION

ALL DIMENSIONS ARE IN MM

DRAWING NO.

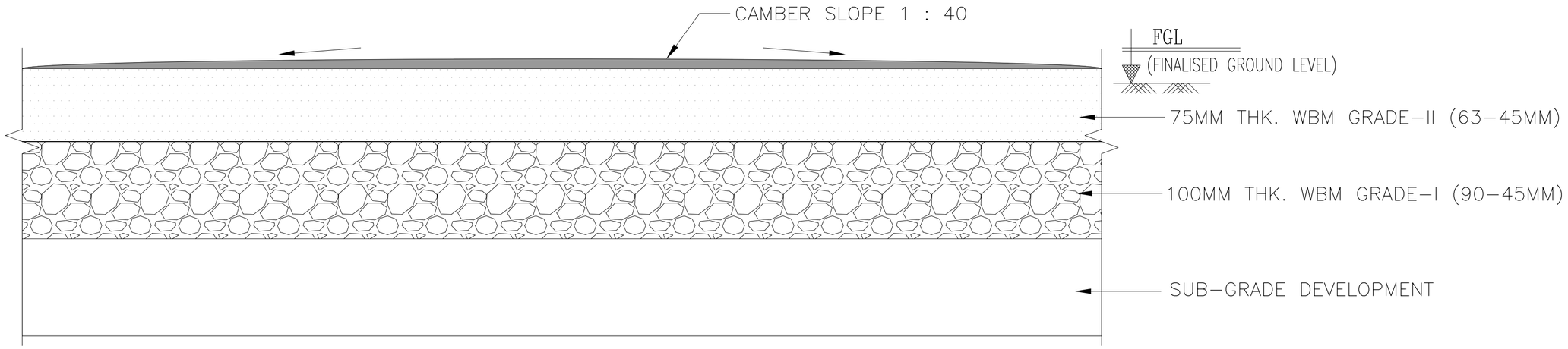

HARD SURFACE

COPY RIGHT AND CONFIDENTIAL
The information in this document is the property of BHARAT HEAVY ELECTRICALS LIMITED
it must not be used directly or indirectly to the detriment of the company.

REV	DESCRIPTION	DESN	DRN	CHD	APPD

CONSULTANT:

CLIENT:

PROJECT: STANDARDIZATION OF PROJECT INFRASTRUCTURE FACILITIES

CONTRACTOR

BHARAT HEAVY ELECTRICALS LTD
POWER SECTOR

TITLE: HARD SURFACE

SCALE

DRAWING NO.

RELEASED FOR: ☐ PRELIMINARY ☐ TENDER ☐ INFORMATION ☐ APPROVAL ☐ CONSTRUCTION

	NAME	DATE
DRN		
DESN		
CHD		
APPD		
SHEET OF		REV.

PROJECTION

FORMAT SIZE A0

FIRST ANGLE PROJECTION

ALL DIMENSIONS ARE IN MM

DRAWING NO.

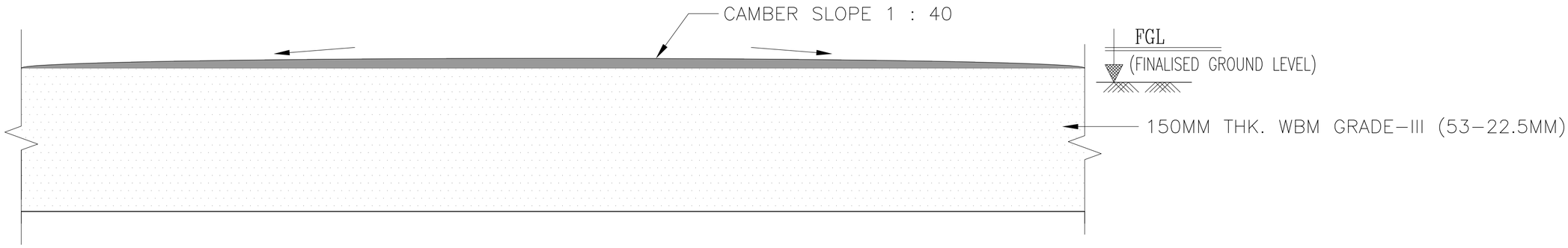

CONCRETE RAISED PLATFORM

NOTES:

1. FLY ASH MIX WITH CEMENT. (90% FLY ASH WITH 10% CEMENT)
2. ROLLER COMPACTED CONCRETE WITH ABOVE SPECIFICATION SHALL BE USED FOR CONCRETE RAISED PLATFORM.

COPY RIGHT AND CONFIDENTIAL
The information in this document is the property of BHARAT HEAVY ELECTRICALS LIMITED
it must not be used directly or indirectly in any way detrimental to the interest of the company.

REV	DESCRIPTION	DESN	DRN	CHD	APPD

CONSULTANT:

CLIENT:

PROJECT: STANDARDIZATION OF PROJECT INFRASTRUCTURE FACILITIES

CONTRACTOR
BHARAT HEAVY ELECTRICALS LTD
POWER SECTOR

TITLE: CONCRETE RAISED PLATFORM

SCALE:

DRAWING NO.

RELEASED FOR: ☐ PRELIMINARY ☐ TENDER ☐ INFORMATION ☐ APPROVAL ☐ CONSTRUCTION

	NAME	DATE
DRN		
DESN		
CHD		
APPD		

SHEET OF REV.

PROJECTION

FORMAT SIZE A0

FIRST ANGLE PROJECTION

ALL DIMENSIONS ARE IN MM

DRAWING NO.

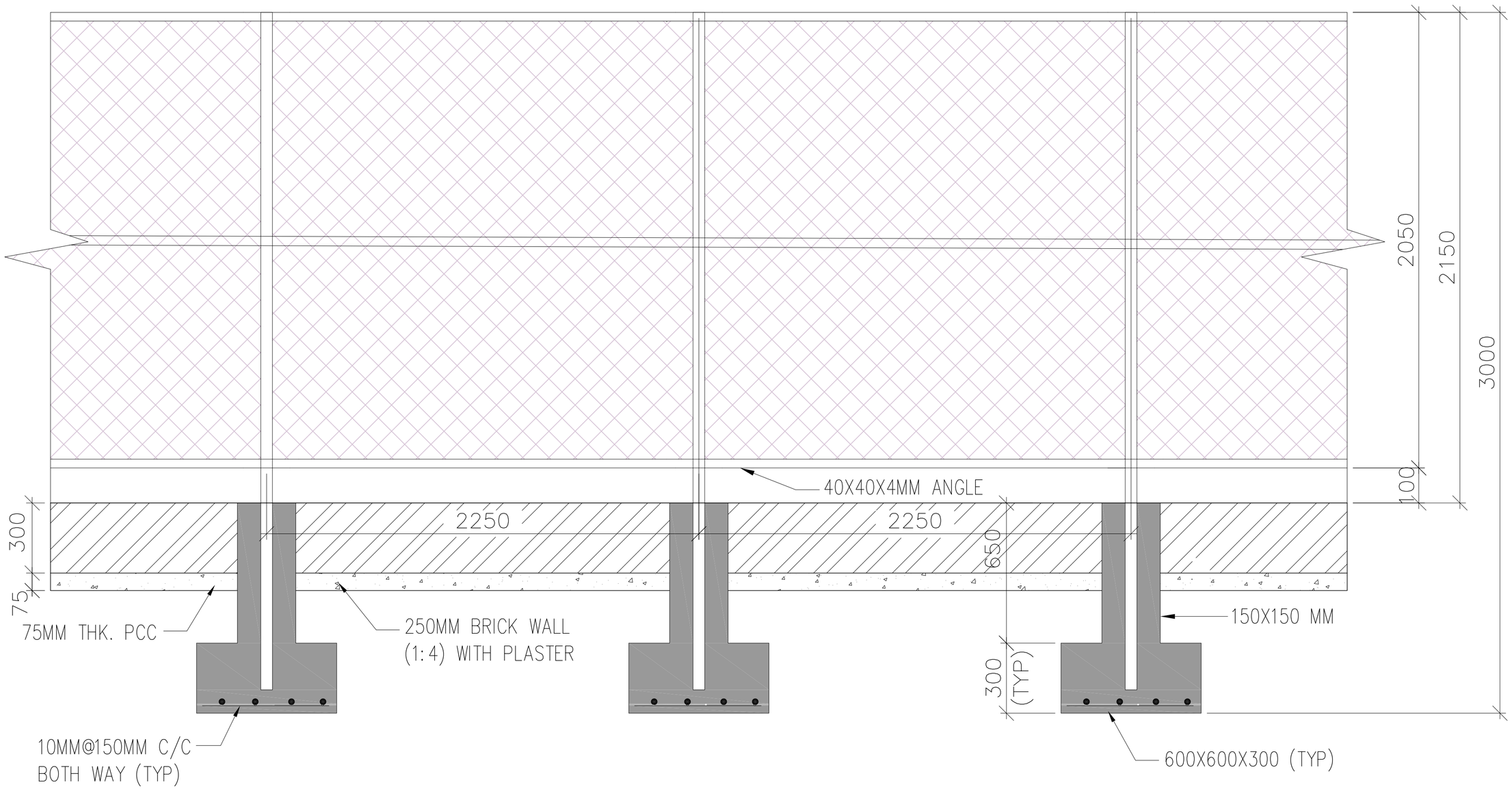

CHAIN LINK

COPY RIGHT AND CONFIDENTIAL
The information is the property of BHARAT HEAVY ELECTRICALS LIMITED
it must not be used directly or indirectly to the detriment of the company.

REV	DESCRIPTION	DESN	DRN	CHD	APPD

CONSULTANT:

CLIENT:

PROJECT: STANDARDIZATION OF PROJECT INFRASTRUCTURE FACILITIES

CONTRACTOR
BHARAT HEAVY ELECTRICALS LTD
POWER SECTOR

TITLE: CHAIN LINK

SCALE

DRAWING NO.

RELEASED FOR: ☐ PRELIMINARY ☐ TENDER ☐ INFORMATION ☐ APPROVAL ☐ CONSTRUCTION

	NAME	DATE
DRN		
DESN		
CHD		
APPD		

SHEET OF REV.

PROJECTION

FORMAT SIZE A0

FIRST ANGLE PROJECTION

ALL DIMENSIONS ARE IN MM

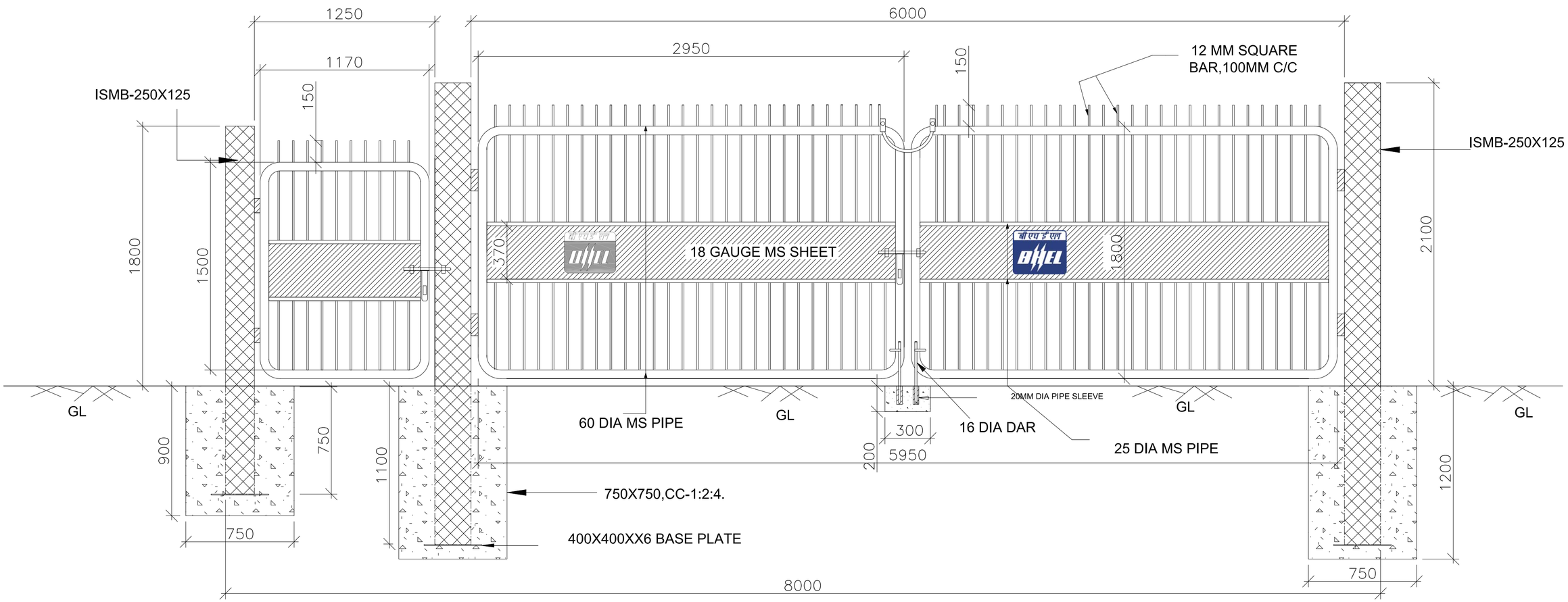

GATE

COPY RIGHT AND CONFIDENTIAL
The information on this document is the property of BHARAT HEAVY ELECTRICALS LIMITED
it must not be used directly or indirectly to the detriment of the company.

REV	DESCRIPTION	DESN	DRN	CHD	APPD

CONSULTANT:

CLIENT:

PROJECT: STANDARDIZATION OF PROJECT INFRASTRUCTURE FACILITIES

CONTRACTOR

BHARAT HEAVY ELECTRICALS LTD
POWER SECTOR

TITLE: GATE

SCALE

DRAWING NO.

RELEASED FOR: ☐ PRELIMINARY ☐ TENDER ☐ INFORMATION ☐ APPROVAL ☐ CONSTRUCTION

	NAME	DATE
DRN		
DESN		
CHD		
APPD		

SHEET OF REV.

PROJECTION

FORMAT SIZE A0

FIRST ANGLE PRJECTION

ALL DIMENSIONS ARE IN MM

DRAWING NO.

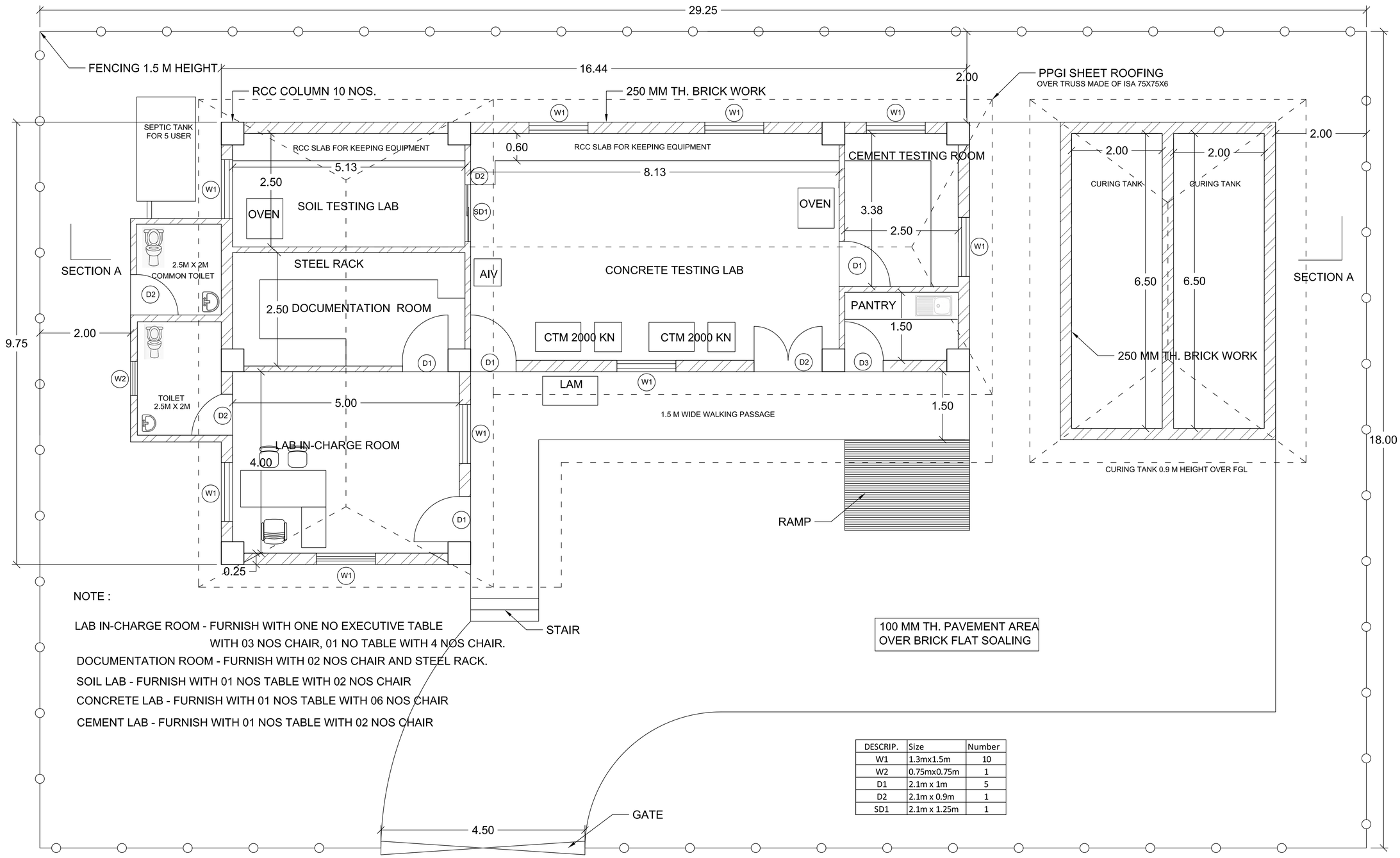

NOTE :

LAB IN-CHARGE ROOM - FURNISH WITH ONE NO EXECUTIVE TABLE WITH 03 NOS CHAIR, 01 NO TABLE WITH 4 NOS CHAIR.

DOCUMENTATION ROOM - FURNISH WITH 02 NOS CHAIR AND STEEL RACK.

SOIL LAB - FURNISH WITH 01 NOS TABLE WITH 02 NOS CHAIR

CONCRETE LAB - FURNISH WITH 01 NOS TABLE WITH 06 NOS CHAIR

CEMENT LAB - FURNISH WITH 01 NOS TABLE WITH 02 NOS CHAIR

DESCRIP.	Size	Number
W1	1.3mx1.5m	10
W2	0.75mx0.75m	1
D1	2.1m x 1m	5
D2	2.1m x 0.9m	1
SD1	2.1m x 1.25m	1

BHEL QUALITY LAB

COPY RIGHT AND CONFIDENTIAL
The information on this document is the property of BHARAT HEAVY ELECTRICALS LIMITED.
It must not be used directly or indirectly in any way detrimental to the interest of the company.

JOB NO. 520

STATUS CONTRACT

DISTRIBUTION

REV.	DATE	ALTD	CHD	APPD	REV.	DATE	ALTD	CHD	APPD	REV.	DATE	ALTD	CHD	APPD

PROJECT: 2X660 MW KORBA WEST

BHARAT HEAVY ELECTRICALS LTD
PSHQ–CPC
NOIDA (U.P.)

DEPT CODE		NAME	SIGN	DATE
C	DRN		Sd/–	
	DESN		Sd/–	
	CHD		Sd/–	
	APPD		Sd/–	

TITLE: BHEL QUALITY LABORATORY

MPL	ELEC	C&I	MSE	MAX	DEPT.	SCALE –	DRAWING NO.
					SIGN		
					DATE		SHEET 1 OF 1 REV.

FORMAT SIZE A0

FIRST ANGLE PRJECTION

ALL DIMENSIONS ARE IN MM

DRAWING NO.

BHEL QUALITY LAB

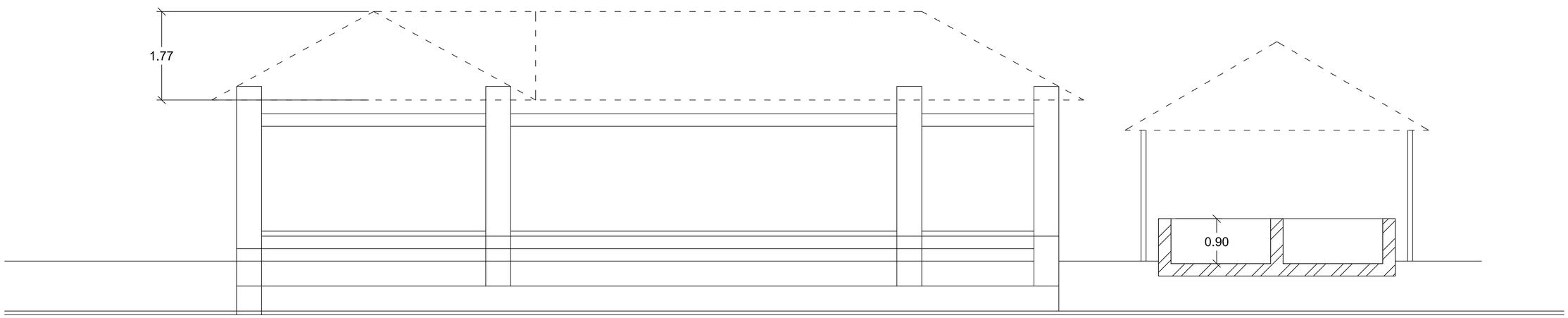

SECTION A

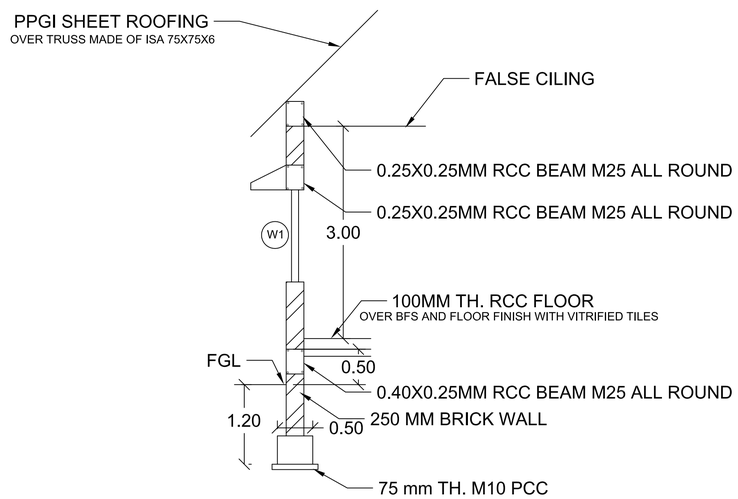

COPY RIGHT AND CONFIDENTIAL
This drawing is property of BHARAT HEAVY ELECTRICALS LIMITED.
The information on this document is to be used for the benefit of the company.
It must not be used directly or indirectly in any way detrimental to the interest of the company.

REV.	DATE	ALTD	CHD	APPD	REV.	DATE	ALTD	CHD	APPD	REV.	DATE	ALTD	CHD	APPD

JOB NO. 520

STATUS CONTRACT

DISTRIBUTION

PROJECT: 2X660 MW KORBA WEST

BHARAT HEAVY ELECTRICALS LTD
PSHQ–CPC
NOIDA (U.P.)

DEPT CODE: C

	NAME	SIGN	DATE
DRN		Sd/–	
DESN		Sd/–	
CHD		Sd/–	
APPD		Sd/–	

TITLE: BHEL QUALITY LABORATORY

MPL	ELEC	C&I	MSE	MAX	DEPT.	SCALE –	DRAWING NO.
					SIGN		
					DATE		SHEET 1 OF 1 REV.

FORMAT SIZE A0

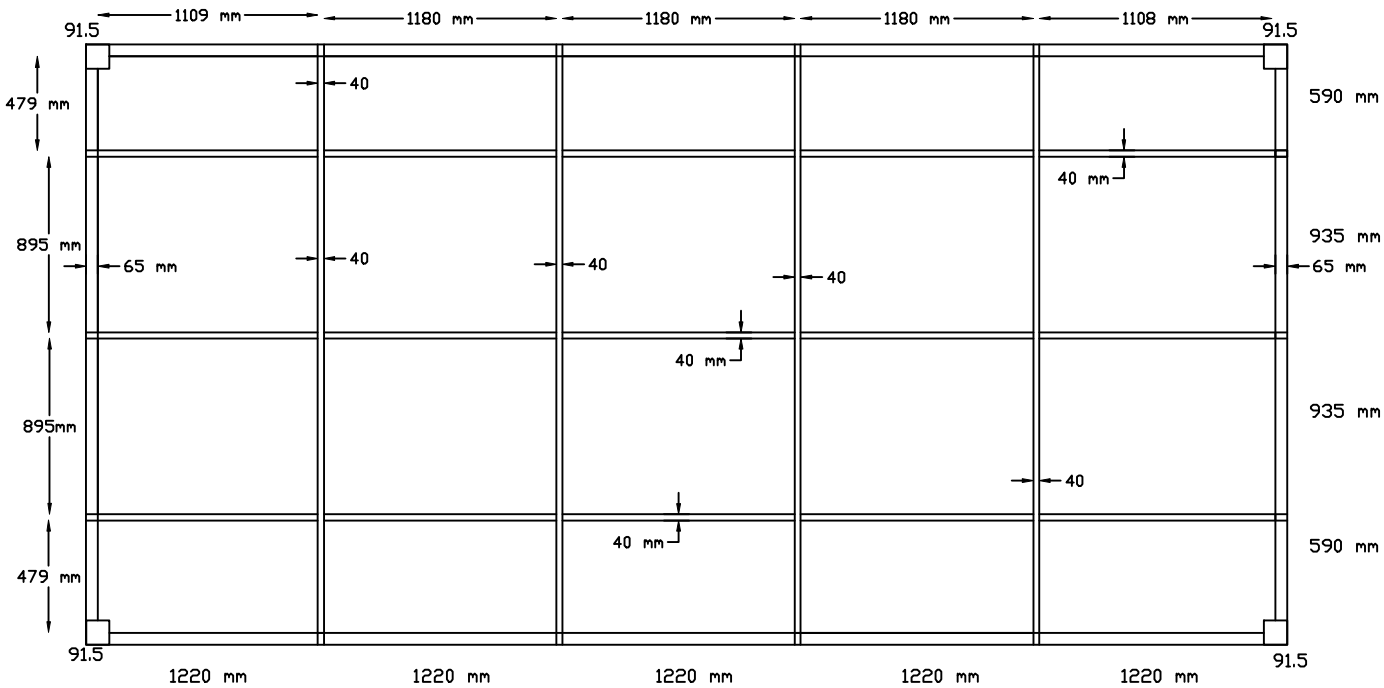

Plan of MS Base frame (size 20' x 10' x 8.5')

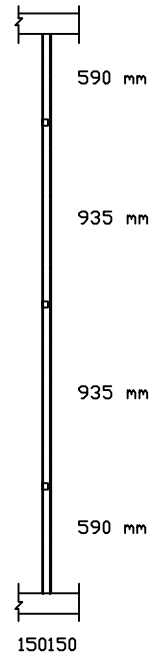

SIDE VIEW

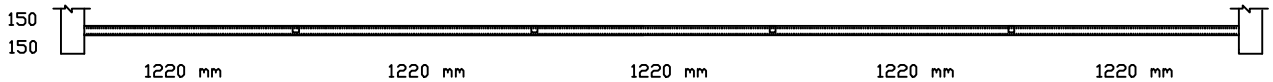

ELEVATION

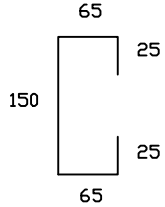

C SECTION DETAILS

Material of MS Base frame (150mm x 65mm x 2.5mm thick) & RHS (Rolled Hollow Section) --- 80mm x 40mmx 2.5mm thick

Drawing Title - MS Base frame Size - 20' x 10' x 8.5'

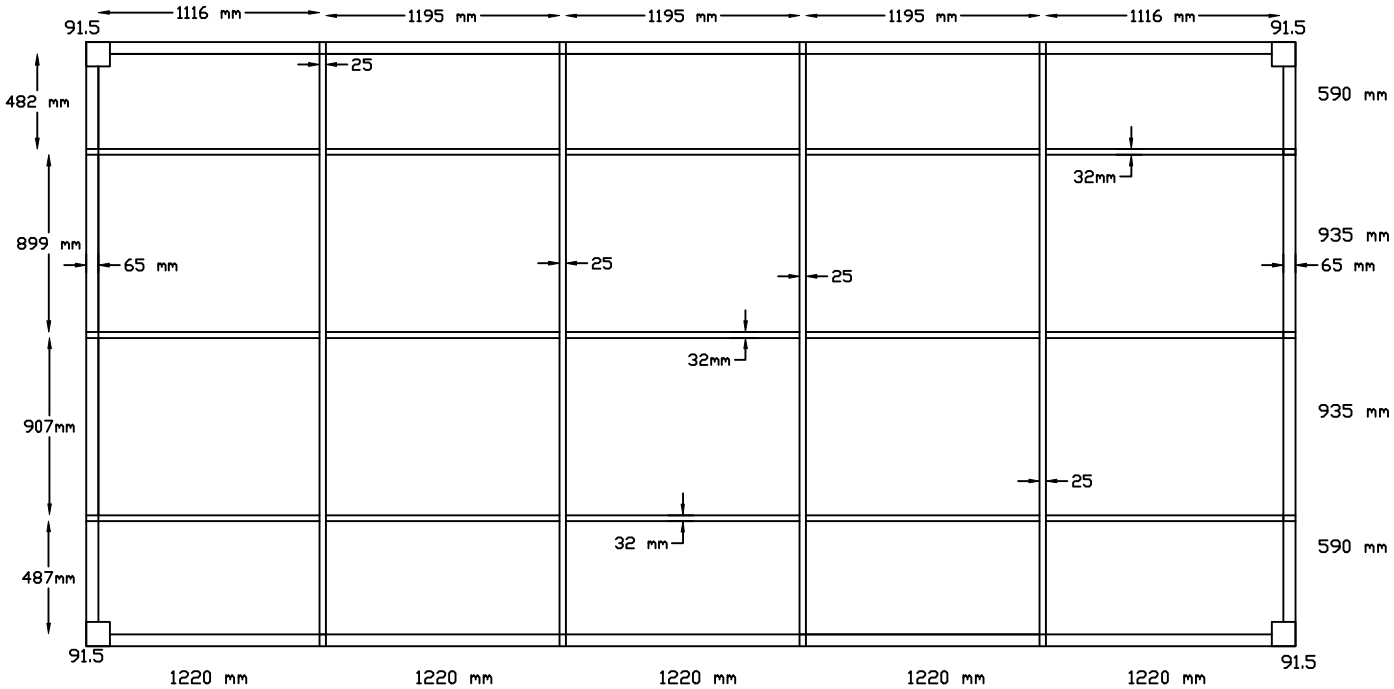

Plan of MS Top frame (size 20' x 10' x 8.5')

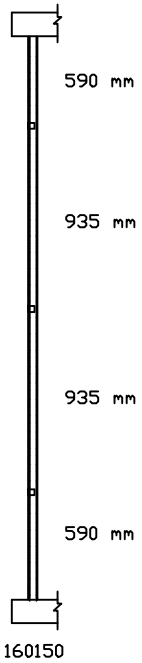

SIDE VIEW

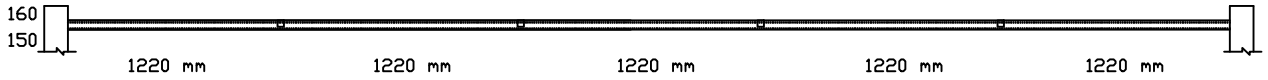

ELEVATION

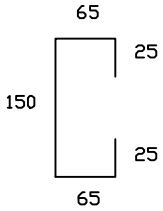

C SECTION DETAILS

Material of MS Top frame (150mm x 65mm x 2.5mm thick) & RHS (Rolled Hollow Section) --- 50mm x 25mmx 2.5mm thick
SHS (Square Hollow section) --- 32mm x 32mm x 2.0mm thick

Drawing Title - MS Top frame Size - 20' x 10' x 8.5'

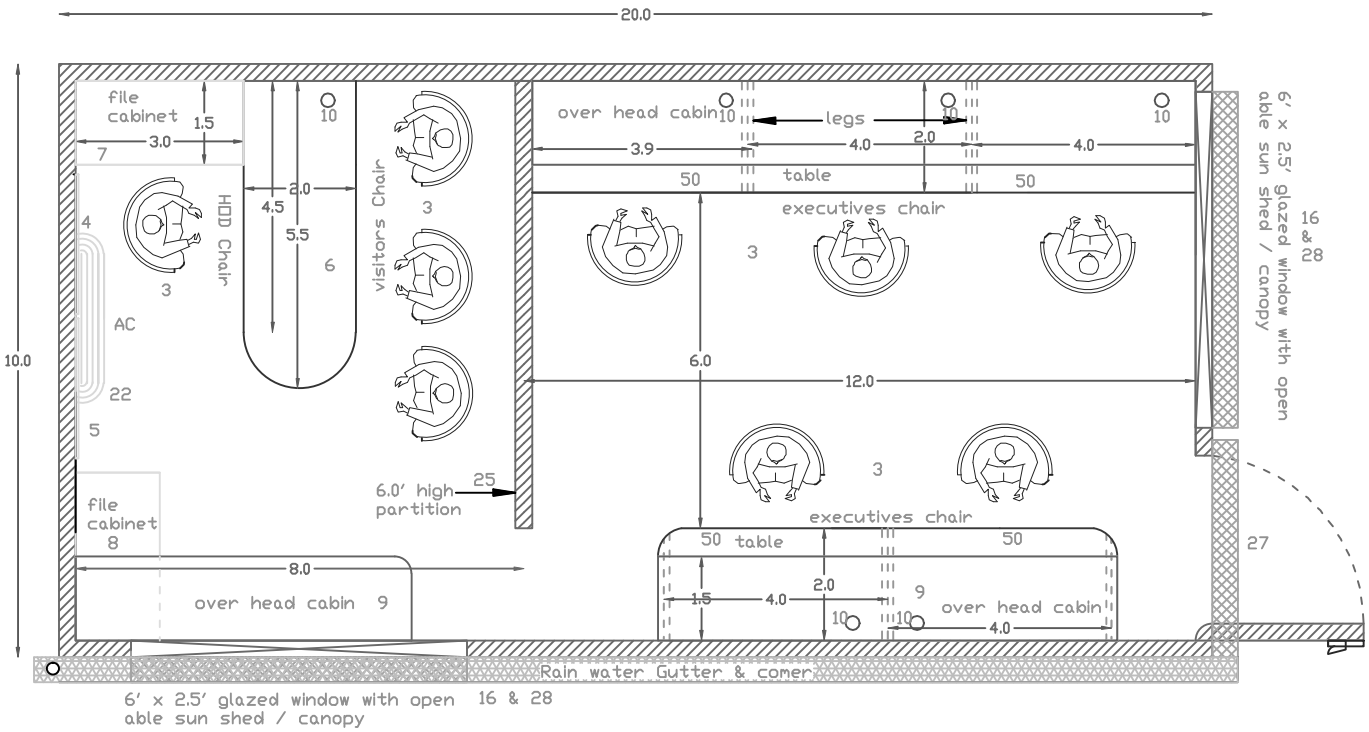

EXECUTIVE INCHARGE / HOD - 20' X 10 ' X 8.0 ' - B TYPE BUNK HOUSE.

Code No	Materials Lists / Specifications	Qty
3	EX. chair serena model 19002 A Godreg make	6
	Visitor chair regency model PCH 7003D Godreg make	3
4	White board Size:750x1000mm	1
6	HOD Table Size:1676x600x750mm ht.	1
7	File cabinet Size:914x450x750mm ht.	1
8	File cabinet Size:914x450x1500mm ht.	1
9	Over Head Cabinet Size:450x600mm .	3
10	Opening for cable	6
16	PVC Sliding window Size:1829x900mm	2
22	Split A.C.	1
25	Half Partition 6' Height	1
27	Door Size:900x1970mm	1
28	Canopy (Foldable) at door / Window size as per Drawing	
50	Running Table of Size : 2 ' width x length as per drawing	
5	Perforated board Size:750x1000mm	1

Note :
1) All dimensions in the Drawing are in Feet & Inches unless otherwise mentioned.
2) Clear Height between finished floor level to bottom of ceiling is 8.00'.
3) Condenser unit for split AC shall be located outside of Bunk house .
4) Position of cable opening as per the switch board location.

Title: Executive in charge / HOD cabin

Type : E

Size : 20' x 10 '

Clint : BHEL - PSWR

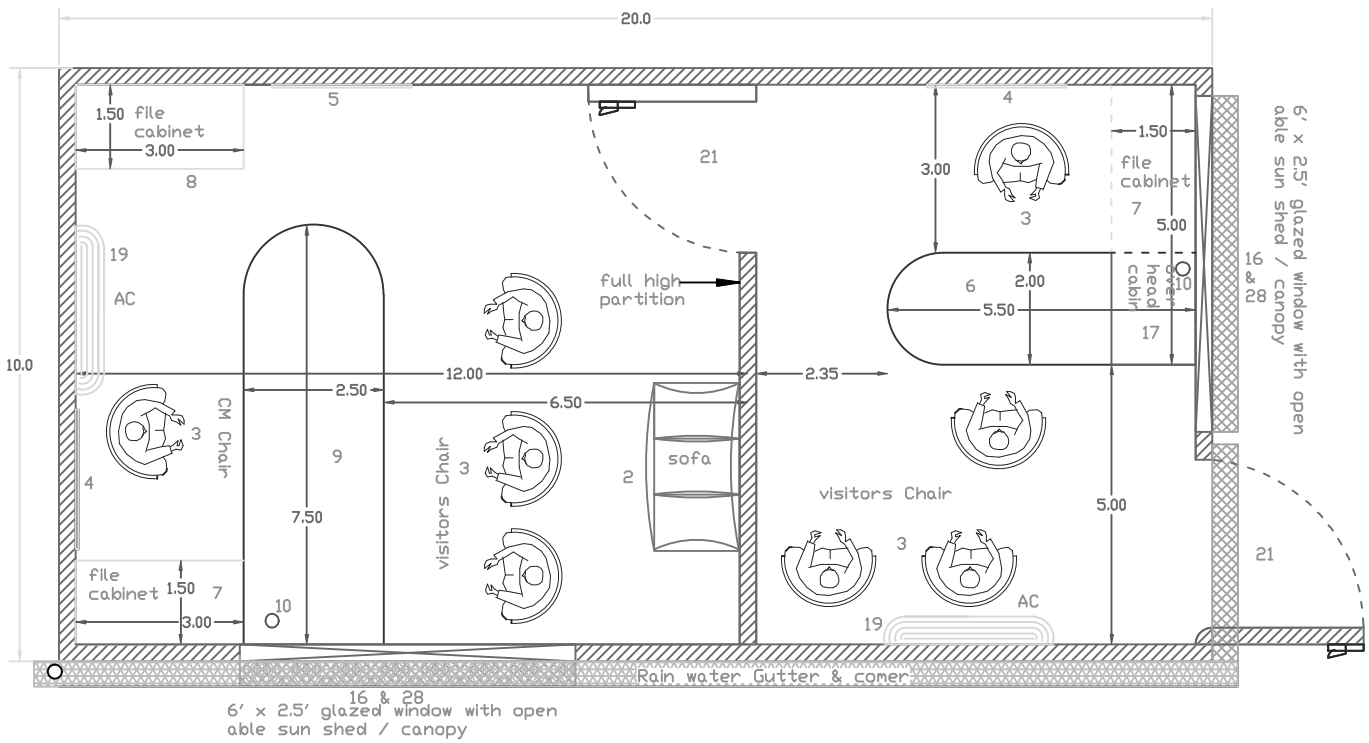

CONSTRUCTION MANAGER CMC CABIN - 20' X 10' - A TYPE BUNK HOUSE.

Code No.	Materials Lists / Specifications	Qty
2	Sofa petal series F3XX 3seater Godreg make Model No.	1
3	CM chair regency model ECH 7001D Godreg make Model No.	1
	PS chair serena model 19002 A Godreg make Model No.	1
	Visitor chair regency model PCH 7003D Godreg make Model No.	6
4	White board Size:750x1000mm	2
5	Perforated board Size:750x1000mm	1
6	PS Table Size:1829x600x750mm ht.	1
7	File cabinet Size:914x450x750mm ht.	2
8	File cabinet Size:914x450x1500mm ht.	1
9	CM Table Size:2286x750x750mm ht.	1
16	PVC Sliding Glazed window Size:1829x750mm	2
18	Over Head Cabinate with 2 track sliding shutter size: 450x450mm	1
19	Split A.C.	2
20	Full Partition (up to ceiling)	1
21	Door Size:900x1970mm	2
23	Opening for cable	2
28	Canopy (Foldable) at door / Window size as per Drawing	
10	Opening for cable	2

Note :
1) All dimensions in the Drawing are in Feet & Inches unless otherwise mentioned.
2) Clear Height between finished floor level to bottom of ceiling is 8.00'.
3) Condenser unit for split AC shall be located outside of Bunk house .
4) Position of cable opening as per the switch board location.

Title: Construction Manager cabin

Type : A

Size : 20' x 10 '

Clint : BHEL - PSWR

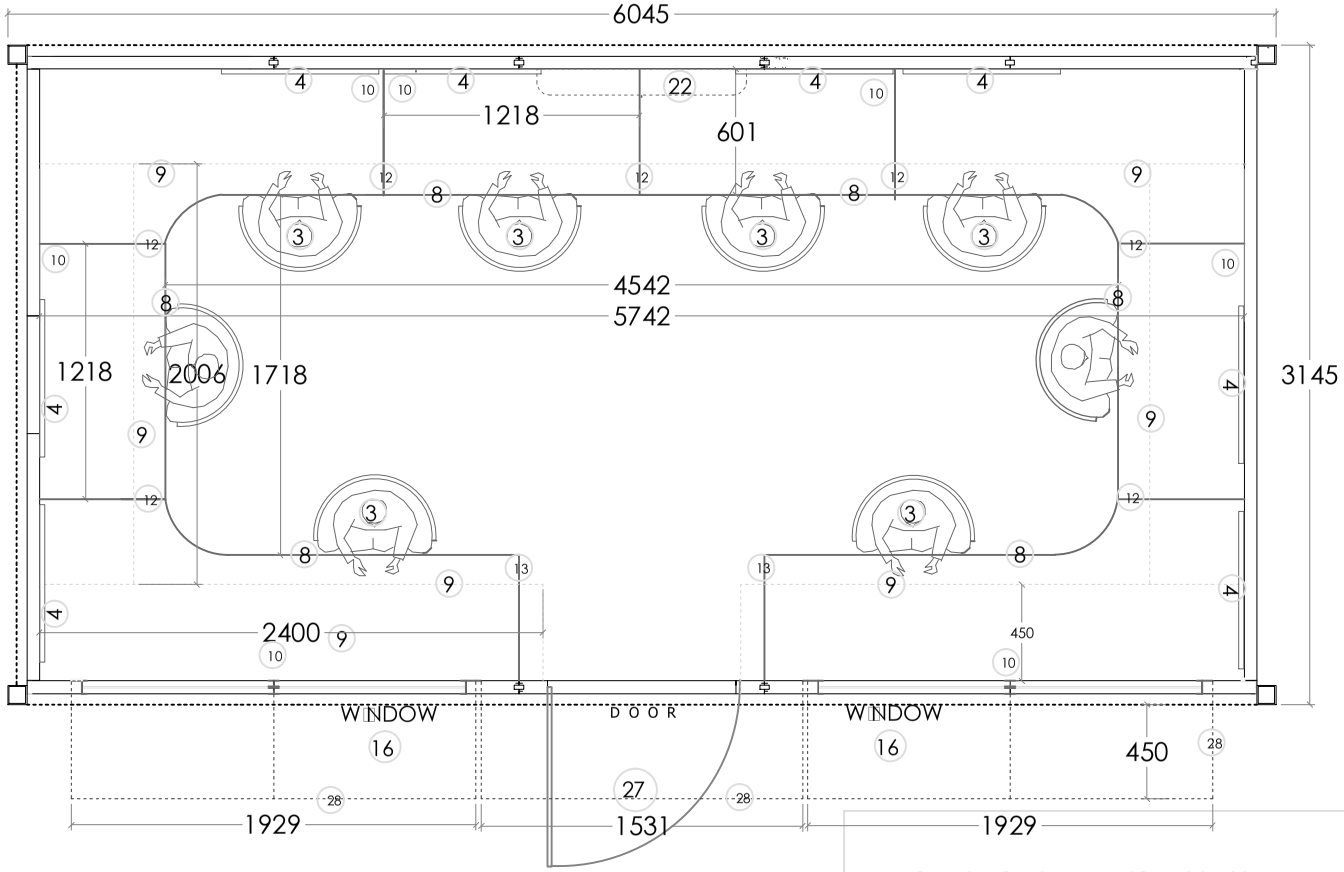

3	Visitor/Staff chair regency model PCH 7003D Godre□make.	8
4	White board Size:750x1000mm	8
8	Running Table Size:as per Drawing.	2
9	Over Head Cabinate Size:As per Drawing.	
10	Opening for cable	8
12	Table partition wall 450mm height from top table surface	7
13	Partition wall up to bottom of Over head cabinate	2
16	PVC Sliding Glazed window Size:1829x750mm	2
22	Split A.C.	1
27	Door Size:900x1970mm	1
28	Canopy (Foldable) at door / Window size as per Drawing	

Note:
1) All Notes shall be followed as per other drawings

Field Cabin /Staff **Size: 20'x10'----** **Type: C**

BHEL PSWR

FIRST ANGLE PROJECTION

ALL DIMENSIONS ARE IN MM

DRAWING NO.

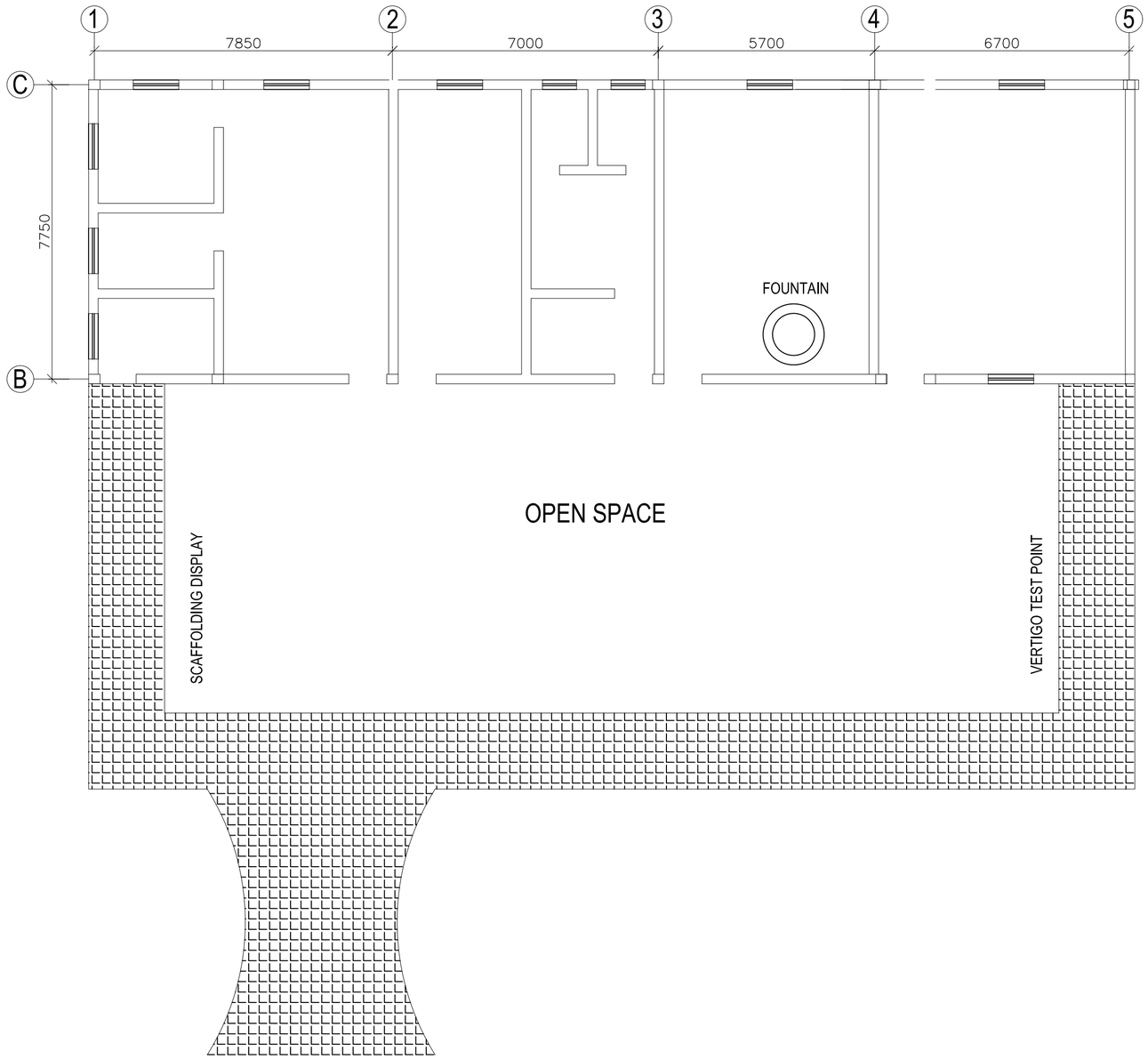

COPY RIGHT AND CONFENTIAL
The information on this document is property of BHARAT HEAVY ELECTRICALS LIMITED
it must not be used directly or indirectly to the detriment of the company.

TYPICAL LAYOUT OF SAFETY PARK

REV	DESCRIPTION	DESN	DRN	CHD	APPD

CONSULTANT:

CLIENT:

PROJECT: STANDARDIZATION OF PROJECT INFRASTRUCTURE FACILITIES

CONTRACTOR

BHARAT HEAVY ELECTRICALS LTD
POWER SECTOR

TITLE: TYPICAL LAYOUT OF SAFETY PARK

SCALE

DRAWING NO.

RELEASED FOR: ☐ PRELIMINARY ☐ TENDER ☐ INFORMATION ☐ APPROVAL ☐ CONSTRUCTION

	NAME	DATE
DRN		
DESN		
CHD		
APPD		

SHEET OF REV.

PROJECTION

FORMAT SIZE A0

FIRST ANGLE PROJECTION

ALL DIMENSIONS ARE IN MM

DRAWING NO.

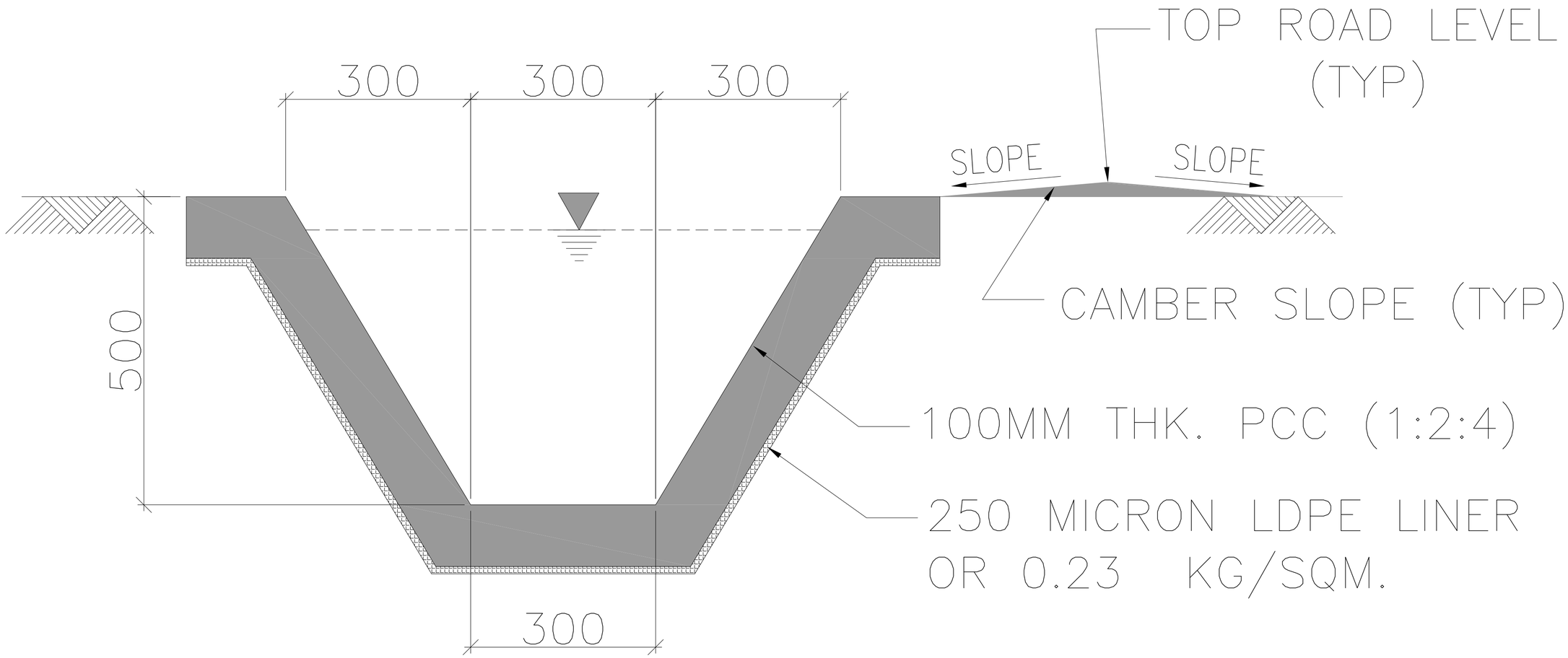

NOTE : CONSTRUCTION JOINT WILL BE GIVEN AFTER EVERY 30M.

COPY RIGHT AND CONFIDENTIAL
The information in this document is the property of BHARAT HEAVY ELECTRICALS LIMITED
it must not be used directly or indirectly in any way detrimental to the interest of the company.

REV	DESCRIPTION	DESN	DRN	CHD	APPD

CONSULTANT:

CLIENT:

PROJECT: STANDARDIZATION OF PROJECT INFRASTRUCTURE FACILITIES

CONTRACTOR

BHARAT HEAVY ELECTRICALS LTD
POWER SECTOR

TITLE: TRAPEZOIDAL DRAIN : SECTION

SCALE

DRAWING NO.

RELEASED FOR: ☐ PRELIMINARY ☐ TENDER ☐ INFORMATION ☐ APPROVAL ☐ CONSTRUCTION

	NAME	DATE
DRN.		
DESN.		
CHD		
APPD		

SHEET OF REV.

PROJECTION

FIRST ANGLE PROJECTION

ALL DIMENSIONS ARE IN MM

DRAWING NO.

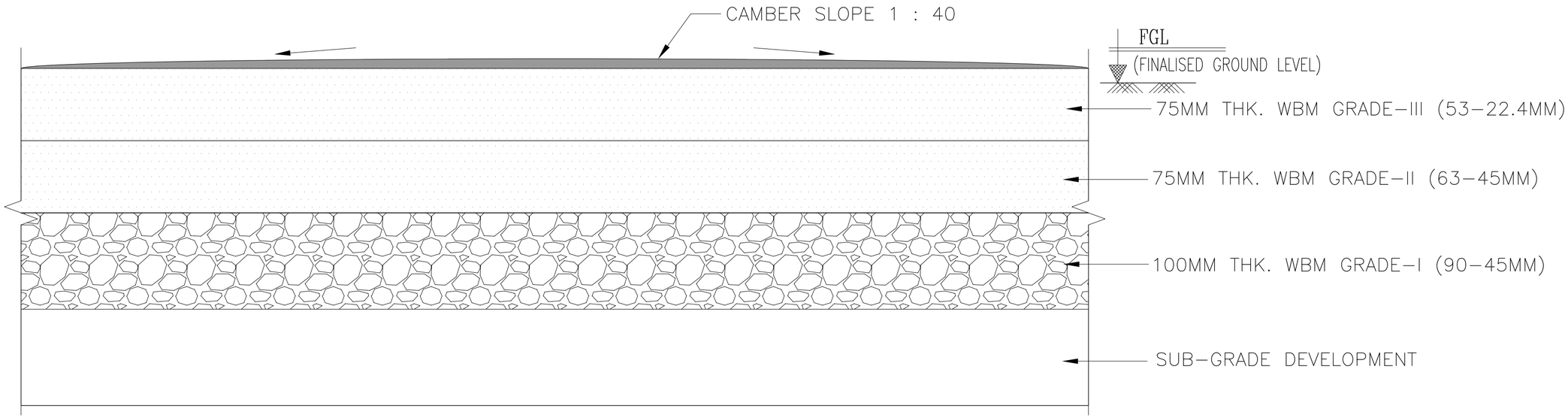

WBM APPROACH ROAD

COPY RIGHT AND CONFIDENTIAL
The information in this document is the property of BHARAT HEAVY ELECTRICALS LIMITED
it must not be used directly or indirectly to the detriment of the company.

REV	DESCRIPTION	DESN	DRN	CHD	APPD

CONSULTANT:

CLIENT:

PROJECT: STANDARDIZATION OF PROJECT INFRASTRUCTURE FACILITIES

CONTRACTOR

BHARAT HEAVY ELECTRICALS LTD
POWER SECTOR

TITLE: WBM APPROACH ROAD

SCALE

DRAWING NO.

RELEASED FOR: ☐ PRELIMINARY ☐ TENDER ☐ INFORMATION ☐ APPROVAL ☐ CONSTRUCTION

	NAME	DATE
DRN		
DESN		
CHD		
APPD		
SHEET OF		REV.

PROJECTION

FORMAT SIZE A0