PRODUCED BY AN AUTODESK EDUCATIONAL PRODUCT

FIRST ANGLE PROJECTION (ALL DIMENSIONS ARE IN mm)

DRAWING NO. 1 457 00 50 089

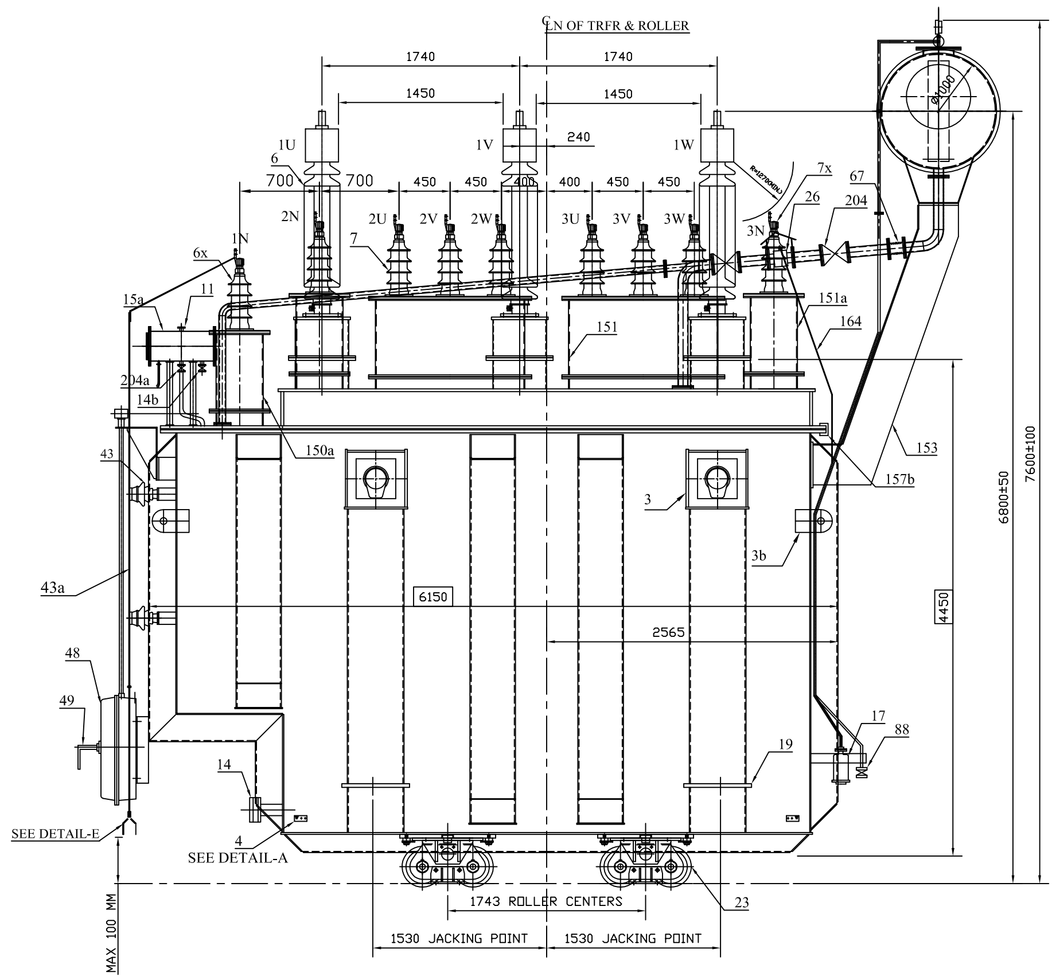

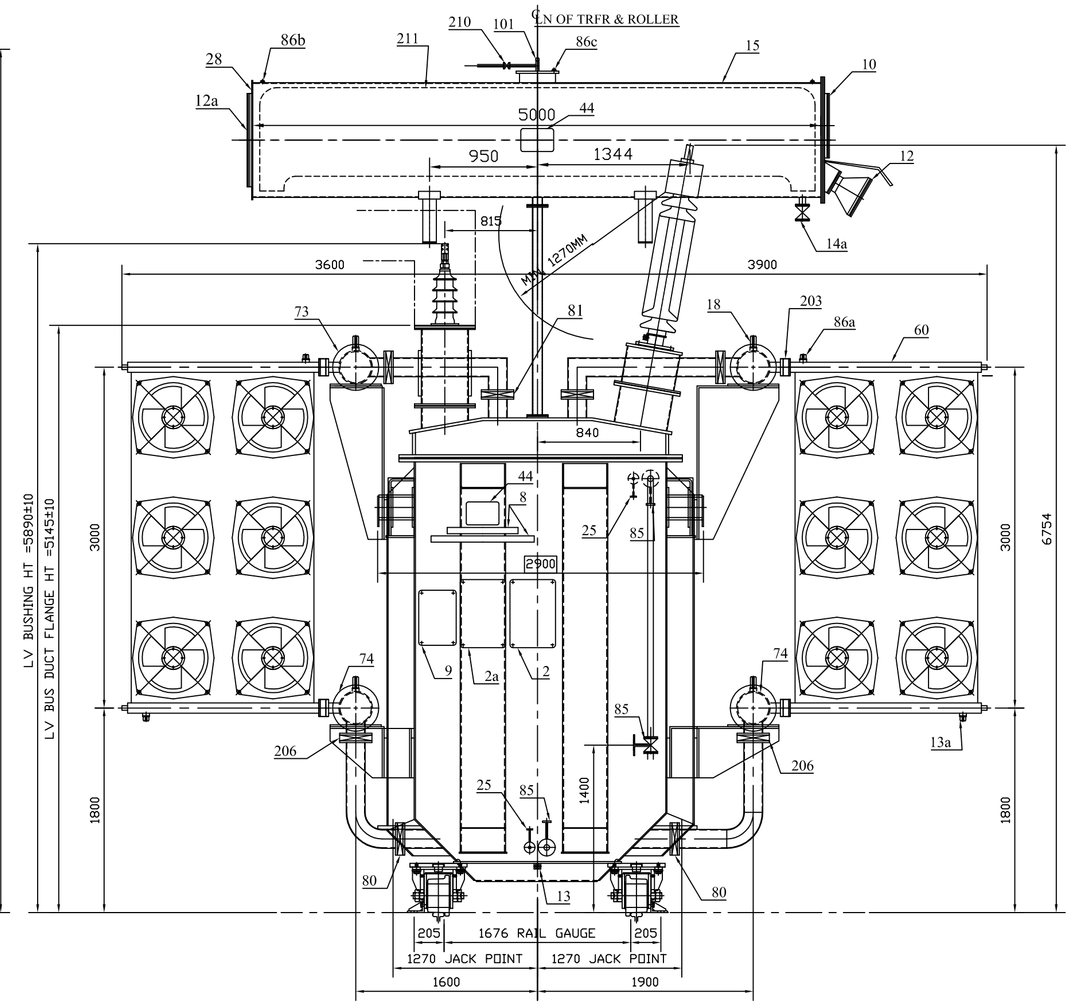

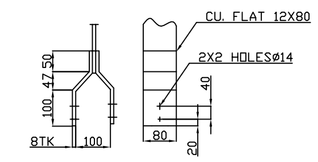

DETAIL - E
FOR HV NEUTRAL GROUNDING ARRGT.

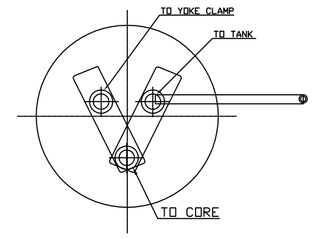

DETAIL-A
EARTHING TERMINAL BOX

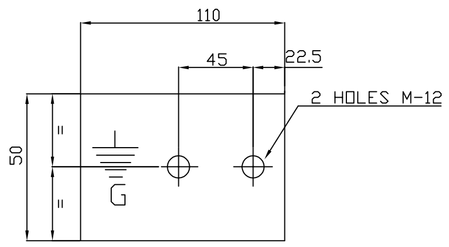

DETAIL-B
EARTHING TERMINAL PAD ON TANK

Signature Not Verified
Digitally signed by PRAVEEN KUMAR
Date: 2016.03.29 14:34:32 IST
Reason: CAT I
Location: NTPCEOC

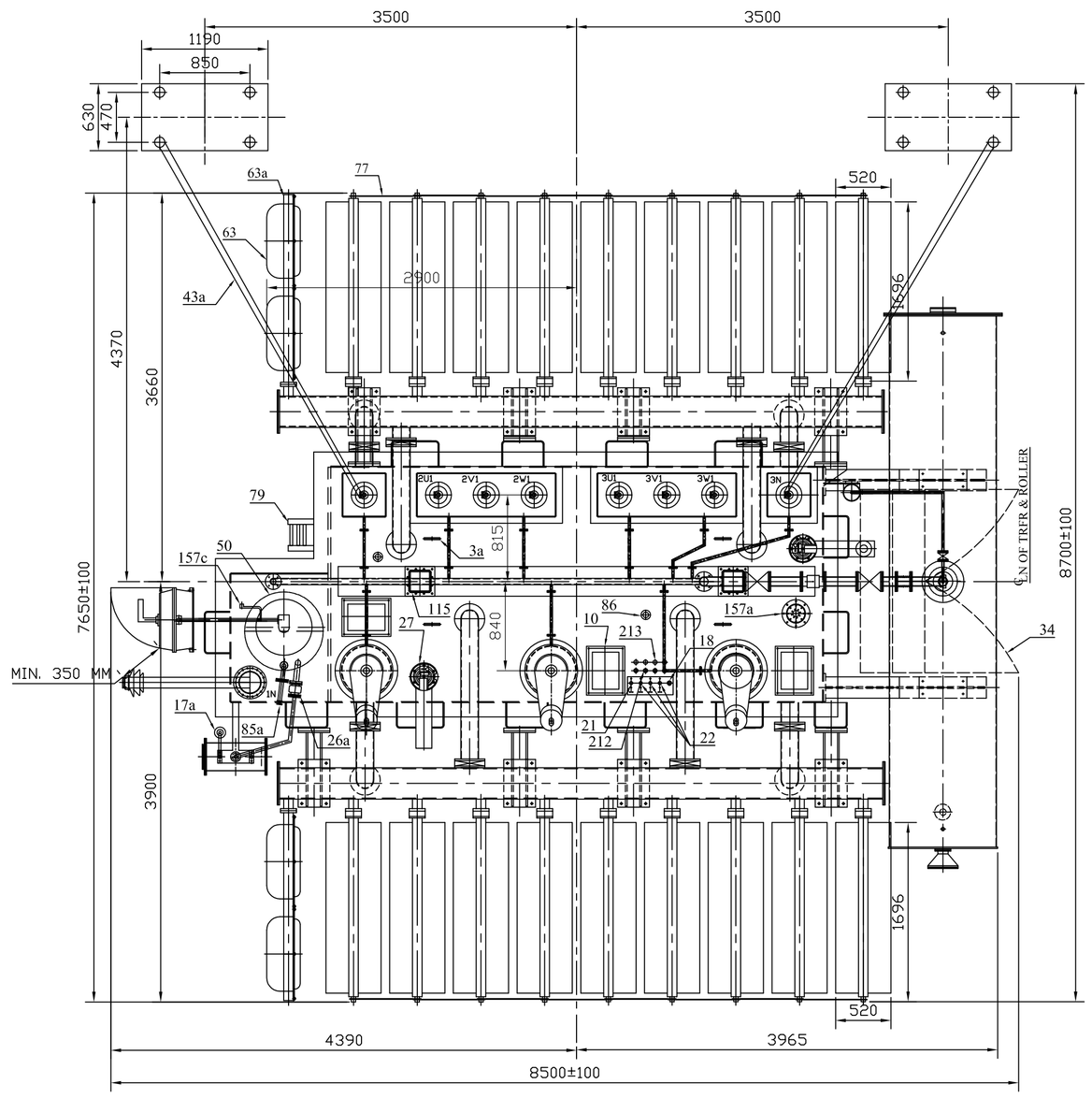

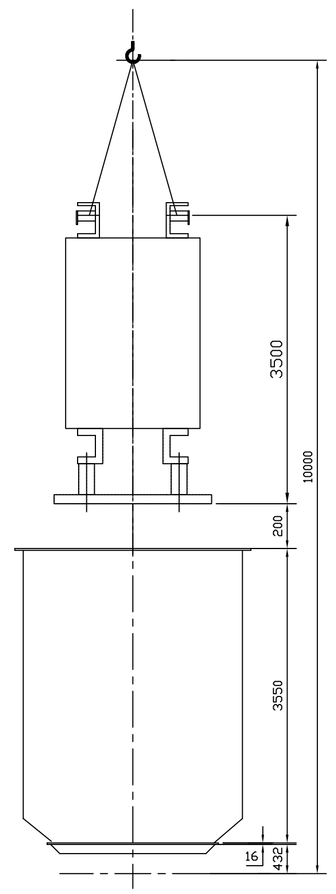

UNTANKING DETAIL

NOTES:-

1. WHEN REFERRING THE O.G.A. DRG. PLEASE QUOTE MVA & W.O. NO. 71190P17400
2. DIMENSIONS MARKED THUS ▭ ARE OVER ALL SHIPPING DIMENSIONS
3. WIRING FROM INSTRUMENTS ,CTS,ETC. NOT SHOW FOR CLARITY.
4. TRANSFORMER OIL SHALL BE SUPPLIED CONFORMING TO NTPC SPEC.
5. PAINT SHADE RAL 5012 (AS PER SPEC).
6. THE DESIGN FEATURES SHOWN ON THIS DRAWING (GENERALLY IN LINE WITH IS.2026 AND AGREED CUSTOMER SPECIFICATION) MEET THE STATUTORY, REGULATORY & SAFETY REQUIREMENT WITH RESPECT TO EARTHING ARRANGEMENT & DANGER LABLES,CLEARANCES IN AIR PROVISIONS FOR PRESSURE RELIEF DEVICE, GAS AND OIL ACTUATED RELAY AND ANTI EARTH QUAKE CLAMPING ARRANGEMENT.
7. DRAWING IS MEETING NTPC TECHNICAL SPECIFICATION REQUIREMENTS.
8. LV BUSDUCT SHOWN BY DOTTED LINE SHALL BE IN SCOPE OF NTPC..

APPROX. WEIGHTS

DESCRIPTION	WTS. IN KGS.
CORE & WINDING ASSY.	61000
TANK & FITTINGS INCLUDING RADIATORS,CONS. ETC.	30000
WEIGHT OF OIL (38665 LTRS.)	34800
TOTAL WEIGHT	128800
SHIPPING WEIGHT (N2 GAS FILLED)	76000

TABLE OF FITTINGS

ITEM NO.	DESCRIPTION	QTY.
2	COMBINED RATING & DIAGRAM PLATE (HINDI & ENGLISH)	01NO
2a	VALVE SCHEDULE PLATE (ENGLISH)	01NO.
3	LIFTING BOLARD	04NOS
3a	LIFTINGS LUGS FOR COVER	04NOS.
3b	LASHING LUGS	04NOS.
4	EARTHING TERMINAL	02NOS.
6	H.V. LINE TERMINALS 145 KV, 1250 AMP.	03NOS.
6x	H.V.NEUTRAL TERMINAL 36 KV, 2000 AMP.	01NO.
7	L.V.LINE TERMINAL 36 KV, 3150 AMPS. (LV1 & LV2)	06NOS.
7x	L.V.N TERMINAL 36 KV, 3150 AMPS. (LV1(N) & LV2(N))	02NOS.
8	NAME PLATE (ENGLISH & HINDI)	02NOS.
9	OIL FILLING INSTRUCTION PLATE	01NO.
10	INSPECTION COVERS (ON TANK,TANK COVER,TURRETS & CONSERVATOR)	22NOS.
11	OIL FILLING HOLES ON O.L.T.C. CONSERVATOR	01NO.
12	MAGNETIC OIL GAUGE MAIN CONSERVATOR WITH RAIN HOOD	01 NO.
12a	PRISMATIC OIL GAUGE MAIN AND OLTC CONSERVATOR	02NOS.
13	DRAIN PLUG 1"BSP	02NOS.
13a	DRAIN PLUG 1/2"BSP FOR RADIATOR.	18NOS.
14	DRAIN VALVE ON TANK (100 NB. GATE VALVE)	01NO.
14a	DRAIN VALVE ON MAIN CONSERVATOR (50 NB.)	01NO.
14b	DRAIN VALVE FOR OLTC CONSERVATOR (15 NB.)	01NO.
15	OIL CONSERVATOR (AIR CELL TYPE)	01NO.
15a	OLTC CONSERVATOR	01NO.
* 17	DEHYDRATING BREATHER FOR MAIN CONSERVATOR (2X100% CAPACITY AND COBALT FREE)	02NOS.
* 17a	DEHYDRATING BREATHER FOR OLTC (2X100% CAPACITY AND COBALT FREE)	01NO.
18	THERMOMETER POCKETS (WITH ALCOHAL THERMOMETER) ON TANK COVER & HEADER	01+04NOS
19	JACKING PAD	04NOS.
21	SENSOR POCKET FOR OIL TEMPERATURE INDICATOR	01NOS.
22	SENSOR POCKET FOR WINDING TEMPERATURE INDICATOR	03NOS.
23	FLANGED BI-DIRECTIONAL ⌀ 320 TWIN ROLLER WITH STOPPER ARRGT.	04NOS.
25	FILTER VALVE ON TANK (50 NB.)	02NOS.
26	BUCHHOLZ RELAY (80NB) WITH RAIN HOOD	01NO.
26a	OIL SURGE RELAY	01NO.
27	PRESSURE RELIEF VALVE WITH RAIN SHADE & OIL PIPE	02NOS.
28	END COVER FOR MAIN CONSERVATOR	01NO.
* 34	MARSHALLING BOX	01NO
* 43	33 KV, POST INSULATOR FOR H.V.N.	02NOS.
* 43a	HV NEUTRAL GROUNDING COPPER STRIPS	01NO.
44	BILINGUAL COMPANY'S MONOGRAM (ON TANK & MAIN CONSERVATOR)	1+01NO.
48	MOTOR DRIVING UNIT FOR OLTC	01NO.
49	HAND OPERATING HANDLE FOR MOTOR DRIVE UNITE	01NO.
50	ON LOAD TAP CHANGER	01NO.
* 60	RADIATORS	18NOS.
* 63	FAN & MOTOR (10 RUNNING + 2 STANDBY) WITH G.I. WIRE MESH GUARD	12NOS
63a	FAN SUPPORT	02NO.S
* 64	COPPER STRIPS FOR CONNECTION OF LV NEUTRAL DIRECTLY TO NGR TOP	02NOS.
* 67	FLEXIBLE JOINT 80 N.B.,150NB &200 NB)	04NOS.
* 73	TOP HEADERS	02NOS.
* 74	BOTTOM HEADERS	02NOS.
* 77	RADIATOR TIE BAR	32NOS.
* 79	LADDER WITH SAFETY FLAP	01NO.
80	OIL INLET VALVE ON TANK (150 NB B/F)	04NOS.
81	OIL OUTLET VALVE ON TANK (200 NB B/F)	04NOS.
85	SAMPLING VALVE (15 NB) ON TANK (TWO IN SERIES)	04NOS.
85a	SAMPLING VALVE (25NB) FOR OLTC DIVERTER SWITCH	01NO.
86	AIR RELEASE VALVE (15 NB) ON COVER	01NO.
86a	AIR RELEASE PLUG ON RADIATORS & HEADERS	18+2NOS.
86b	AIR RELEASE PLUGES (3/4" BSP) ON MAIN CONSERVATOR	02NOS.
86c	AIR RELEASE PLUG (1/4" BSP) ON MAIN CONSERVATOR	01NO.
88	BUCHHOLZ RELEASE COCK (6 NB) WITH 6 N.B. PIPE	01NO.
101	PRESSURE GAUGE ON MAIN CONSERVATOR	01NO.
115	HOLE FOR CLAMPING CORE AND COIL TO TANK COVER	02NOS.
150	HV TURRET (DETACHABLE)	03NOS.
150a	HV NEUTRAL TURRET (DETACHABLE)	01NO.
151	LV TURRET (DETACHABLE) LV1 & LV2	02NOS.
151a	L.V.IN & LV2N TURRET (DETACHABLE)	02NOS
157a	EARTHING CONNECTION BETWEEN CORE TO END FRAME,END FRAME TO TANK	01NO.
157b	EARTHING CONNECTION BETWEEN TANK TO TANK COVER	02NOS.
157c	EARTHING CONNECTION BETWEEN TAP CHANGER TO TANK COVER	01NO.
164	BREATHER PIPE (15 N.B.)	02NOS.
* 203	RADIATOR VALVE (80 NB BUTTERFLY)	36NOS.
204	CONSERVATOR VALVE (80 NB GATE VALVE FOR MAIN CONS.)	02NOS
204a	CONSERVATOR VALVE 25 NB FOR OLTC CONS.	01NO.
* 210	VALVE (15 NB) FOR BREATHER CONNECTION ON MAIN CONSERVATOR	01NO.
* 211	FLEXIBLE SEPERATOR (AIR CELL) INSIDE MAIN CONSERVATOR	01NO.
212	POCKET FOR RTD SENSOR (OTI & WTI)	04NOS.
213	CT TERMINAL BOARD (HV,HVN,LV1N,LV2N,LV1&LV2)	08NOS.

* NOT FITTED DURING SC TESTING AT HPL.

W.O. 71190P17400

PO. NO. : - CS-9549-501-2-FC-NOA-6207

SPEC. NO. - CS-9549-501-2

STATUS - U

DISTRIBUTION

BHEL	TRE-1	TRX-1	TRM-3
NTPC			

NTPC DRG. NO. 9549-501-PVE-B-01

BHEL DRG. NO. 14570050089

NTPC LTD.

DARLIPALLI SUPER THERMAL POWER PROJECT-2X800 MW

BHARAT HEAVY ELECTRICALS LTD. JHANSI

	NAME	SIGN	DATE
DRN	PAWAN		
CHD	PB		
APPD	RKM		

NO. OF VAR —

TITLE

OUT LINE GENERAL ARRGT.

110 MVA, 132/11.5-11.5 KV, ONAF/ONAN COOLED STATION TRANSFORMER

ITEM NO —

NO. OF ITEM —

DEPT

SIGN

DATE

SCALE NTS

DRAWING NO. 1 457 00 50 089

REV. 05

SHEET 01 OF 01

REV. 05

REV	DATE	ALTERED / CHECKED / APPROVED	ZONE
05	10. 03. 16	REVISED AS PER NTPC'S COMMENTS.	
04	08/02/16	REVISED AS PER NTPC'S COMMENTS.	
03	15/01/16	REVISED AS PER NTPC'S COMMENTS AND TO CHANGE POSITION OF HVN BUSHING.	
02	29/12/15	REVISED AS PER NTPC'S COMMENTS AND TO PROVIDE TANK MOUNTED COOLING BANK.	
01	18/08/15	REVISED AS PER NTPC'S COMMENTS	

REF. DRG. NO. PDW012377. DWG

SIGN. & DATE

INVENTORY NO.

PRODUCED BY AN AUTODESK EDUCATIONAL PRODUCT
THE INFORMATION ON THIS DOCUMENT IS THE PROPERTY OF BHARAT HEAVY ELECTRICALS LIMITED. IT MUST NOT BE USED DIRECTLY OR INDIRECTLY IN ANY WAY DETRIMENTAL TO THE INTEREST OF THE COMPANY.

SIZE A1

PRODUCED BY AN AUTODESK EDUCATIONAL PRODUCT