FIRST ANGLE PROJECTION(ALL DIMENSIONS IN MILLIMETRES)

CAUTION THE INFORMATION ON THIS DOCUMENT IS THE PROPERTY OF BHARAT HEAVY ELECTRICALS LIMITED. IT MUST NOT BE USED DIRECTLY OR INDIRECTLY IN ANY WAY DETRIMENTAL TO THE INTEREST OF THE COMPANY

DRAWING No 3-80-423-34412

12.5

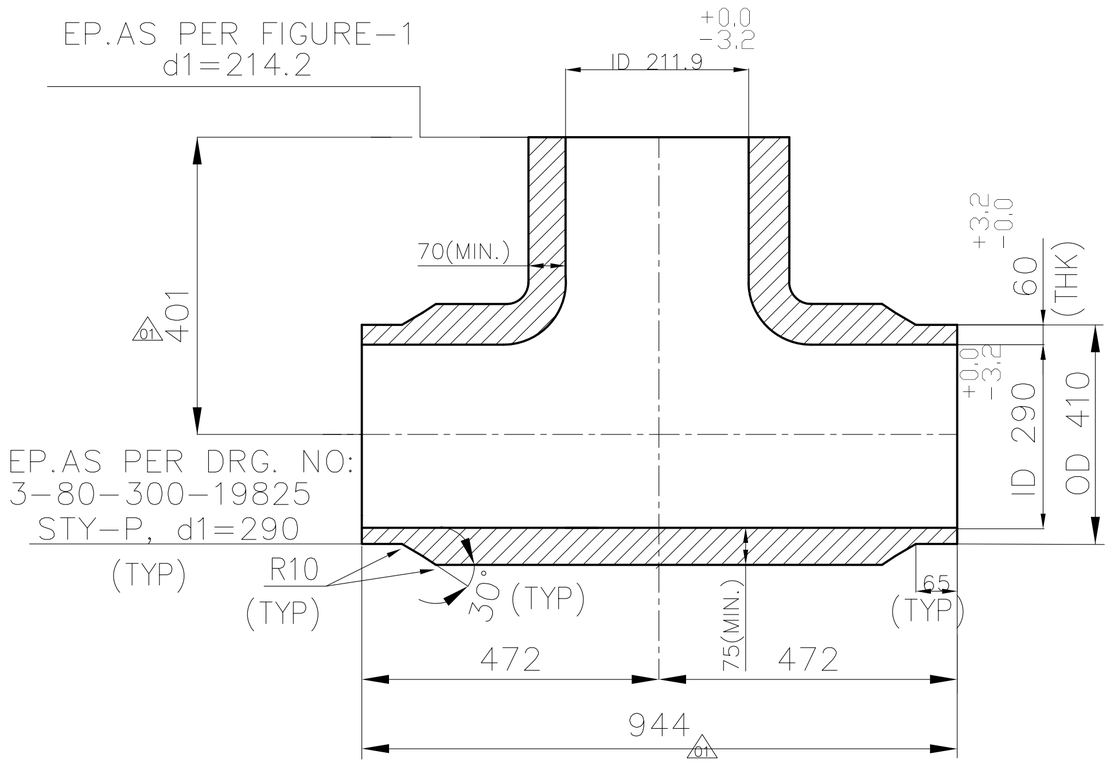

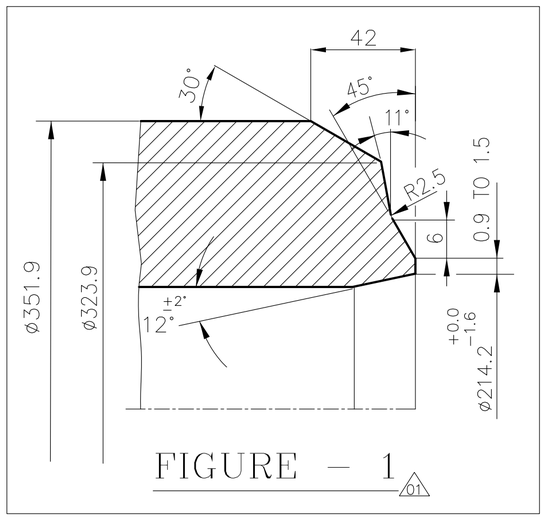

NOTES :-

01. DESIGN PRESSURE : 450 kg/sq.cm.(g)
02. DESIGN TEMPERATURE : 200° C
03. ALL DIMENSIONS ARE FINISHED DIMENSIONS.
04. MANUFACTURING, INSPECTION AND TESTING SHALL BE AS PER IBR, ASME B16.9 AND SA234.
05. DIMENSIONS AND TOLERANCES ARE AS PER THIS DRAWING.
06. MATERIAL SPECIFICATION SHALL BE SA234WPC(A)
07. FOLLOW TDG:102 (LATEST REVISION)
08. WEIGHT GIVEN IN BOM IS INDICATIVE ONLY. ACTUAL WEIGHT TO BE FURNISHED BY FITTING SUPPLIER.
09. CONSTRUCTION SHALL BE SEAMLESS
10. CONNECTING PIPE SIZE -ID290X60/OD323.9X56

ITEM NO.	DESCRIPTION	DRAWING NO.	ITEM NO. / VAR NO.	MATERIAL CODE / MATERIAL SPEC.	A / C	UNIT WT. / QTY.
	BW UNEQUAL TEE ID290X60/ID211.9X56	3-80-423-34412		92 525 047 0000 / SA 234 WPC	A	01 796.000 / 1

TYPE OF PRODUCT OR NAME OF CUSTOMER/PROJECT

BHARAT HEAVY ELECTRICALS LTD., PIPING CENTRE, CHENNAI 600 017

	NAME	SIGN	DATE	NO OF ITEMS
DRN	R.BHARATH		26.03.18	
CHD	I.BISWAS		26.03.18	
APPD	R SESHAGIRI		26.03.18	

DEPT. / CODE	GRADE OF UN TOL. DIM	SCALE	WEIGHT (Kg).	BHEL PO REF.NO:	ITEM No.
	C/M/F	N.T.S.	796.000		

TITLE: BW UNEQUAL TEE (ID290X60/OD323.9X56)

CARD CODE: U 01

DRAWING No. 3-80-423-34412

REV 01

REV	DATE	ALTD : R.BHARATH / APPD : I.BISWAS
01	27.09.18	

DIMENSIONS ALTERED AS MARKED
WEIGHT CORRECTED
NOTE NO-5 ALTERED

REVISIONS MARKED AS 01

SIZE A3