ALL DIMENSIONS ARE IN MILLIMETRES

DRAWING NO: 30-ST-212-01-525

DEVIATIONS OF UNTOLERANCED DIMENTIONS TO BE AS PER IS:2102-1969 MEDIUM.

1.6

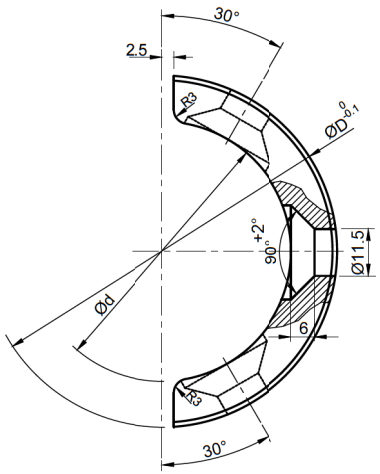

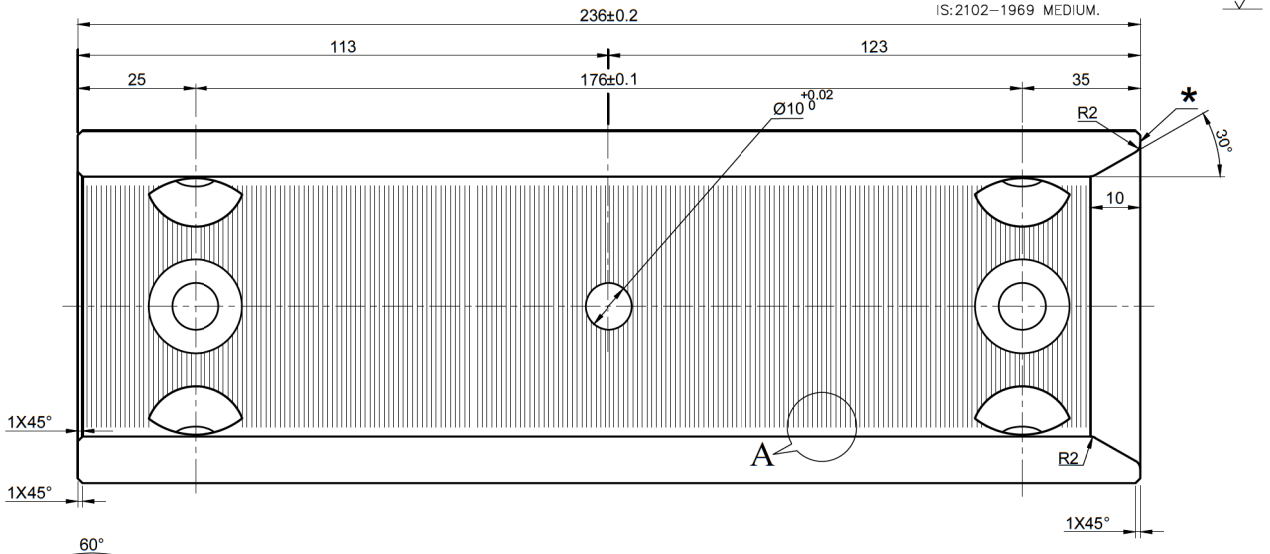

SL. No.	JAW SIZE	d	D	MATERIAL CODE No.	Wt/Kg
01	42.4	42.8	63	69 26 12 4240	1.25
02	44.5	44.9	65	69 26 12 4450	1.5
03	47.63	48.1	68	69 26 12 4763	1.7
04	48.3	48.7	68	69 26 12 4830	1.85
05	51	51.4	71	69 26 12 5100	2.0
06	54	54.4	74	69 26 12 5400	2.2
07	55	55.4	75	69 26 12 5500	2.5
08	57	57.4	77	69 26 12 5700	2.6
09	60.3	60.7	81	69 26 12 6030	2.8
10	63.5	63.9	84	69 26 12 6350	2.85
11	70	70.4	90	69 26 12 7000	3.0
12	73	73.4	93	69 26 12 7300	3.1
13	76.1	76.5	91	69 26 12 7610	3.2
14	82.5	82.9	95	69 26 12 8250	3.5
15	88.9	89.3	101	69 26 12 8890	3.8

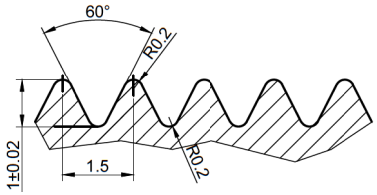

DETAIL-A
SCALE 10:1

NOTE TO SUPPLIER

01) MATERIAL CHEMISTRY-NABL ACCREDITED LAB TEST CERTIFICATE IS TO BE PROVIDED

02) HARDNESS & HEAT TREATMENT CERTIFICATE OBTAINED FROM THE HEAT TREATERS IS TO BE PROVIDED

03) LIQUID PENETRANT TEST TO BE CONDUCTED ON ENTIRE SURFACE AND SHALL BE CERTIFIED BY NDT LEVEL-2 QUALIFIED PERSONNEL AS PER SNT-TC-1A

* MARK :P O No.& FIRM NAME, AND JAW SIZE WITH 10mm METAL PUNCH

REV	DATE	ALTERED / APPROVED
01	09.08.13	R.Kumar / N A Nathan
SL.No. 15 ADDED(ø83.9)		
02	04.02.2015	R.Kumar / N A Nathan
DIMN.236 WAS 226, DIMN.123 WAS 113 DIMN.35 WAS 25.		

ANY ONE OF THE FOLLOWING MATERIAL SHALL BE USED

SL No.	MATERIAL	CHEMICAL COMPOSITION C	Si	Mn	Cr	P	S	Mo	V
01	XT215Cr12 (IS:3748-1990)	2.0 2.3	0.10 0.35	0.25 0.50	11.0 13.0	0.035MAX.	0.035MAX.	0.80MAX. OPTIONAL	0.080MAX. OPTIONAL
02	X210Cr12 (DIN 1.2080)	1.9 2.0	0.2 0.4	0.2 0.4	11.0 12.0	0.035MAX.	0.035MAX.	-	-

HARDEN & TEMPER TO 50-55 HRC

CAUTION: THE INFORMATION ON THIS DOCUMENT IS THE PROPERTY OF BHARAT HEAVY ELECTRICALS LIMITED.IT MUST NOT BE USED DIRECTLY OR INDIRECTLY IN ANY WAY DETRIMENTAL TO THE INTEREST OF THE COMPANY.

ITEM NO	DESCRIPTION	DRAWING NO	MATL CODE / MATL SPEC	UNIT WT / QTY

EQPT:

Bharat Heavy Electricals Ltd
SEAMLESS STEEL TUBE PLANT
TIRUCHIRAPALLI – 620014

	NAME	SIGNATURE	DATE
DRN	R.KUMAR	R.Kumar	17.06.14
CHD	N ARUMUGANAINAR	N A Nathan	
APPD	S KARUPPASAMY	S Karuppasamy	

DEPT	GRADE OF UNTOL. DIM	SCALE	WEIGHT (Kg)	REF TO ASSY DWG NO	ITEM
SSTP	¢/M/f IS: 2102	1:1	SEE IN TABLE	30-ST-212-01-523	02
CODE 456				REF TO OLD DWG NO PPM 150_T_15_02 TO 28_02	

TITLE: PP SLEEVE FOR NEW POINTING M/C (DIA 42.40-88.90)

CARD CODE: U 01

DRAWING NO : 30-ST-212-01-525

REV 02

A3-SIZE