DRG. NO. RD DG 4 26 1133 1000

FIRST ANGLE PROJECTION

(ALL DIMENSIONS ARE IN mm)

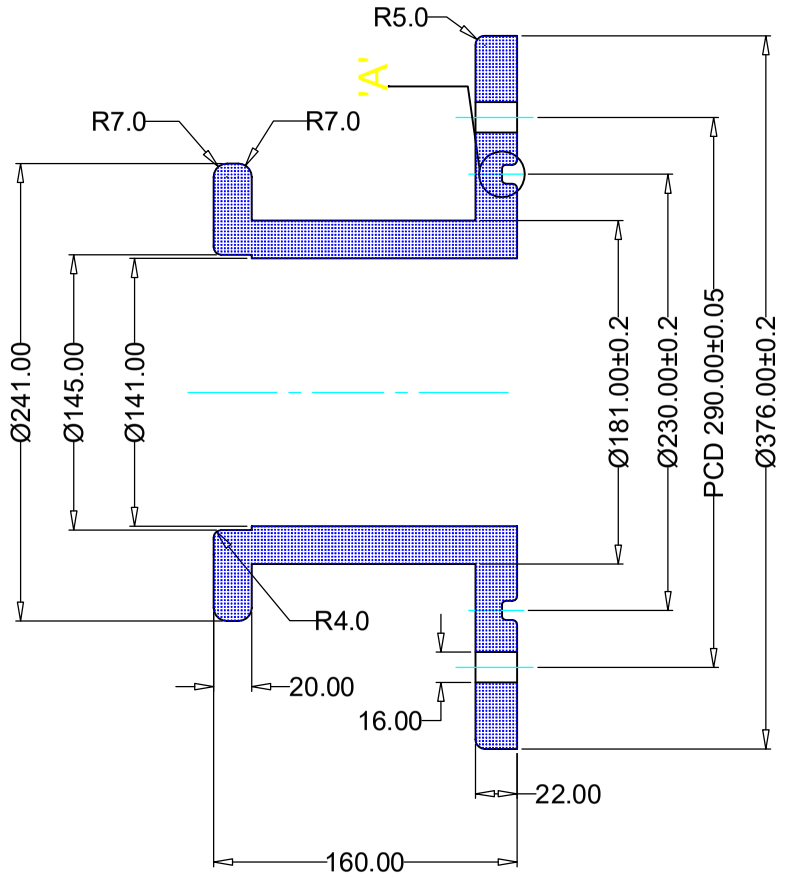

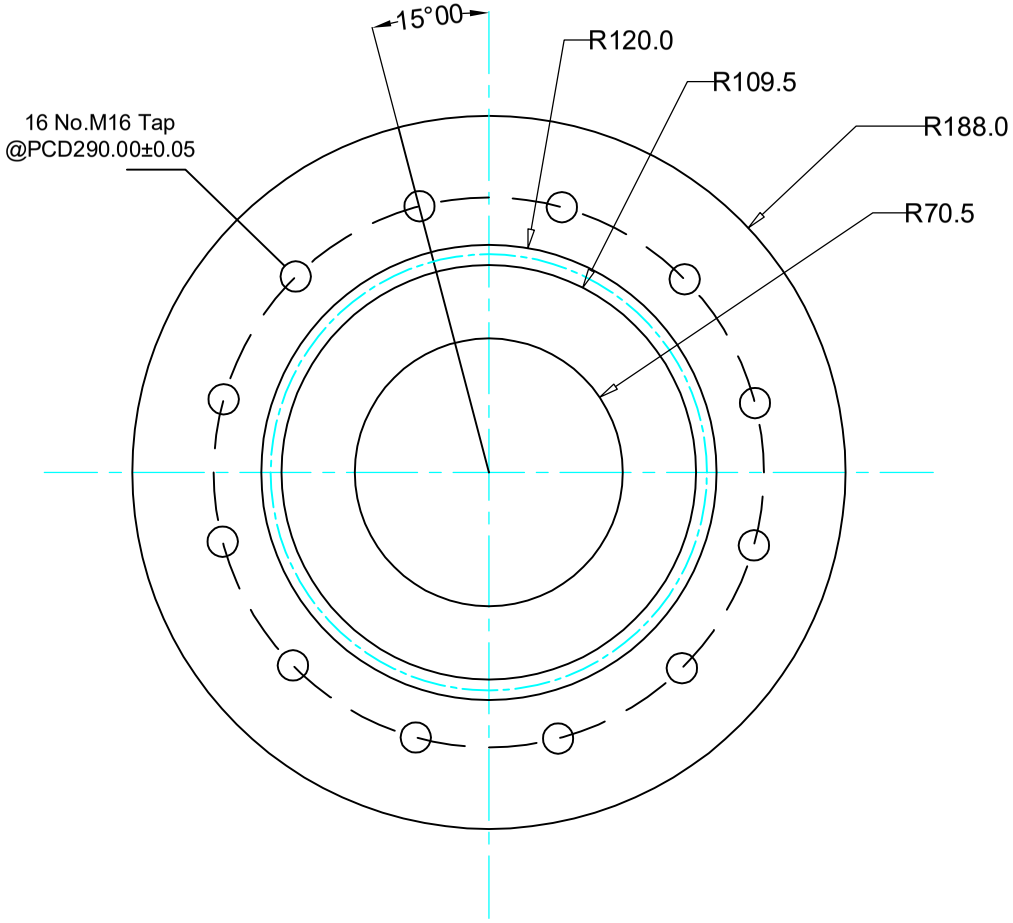

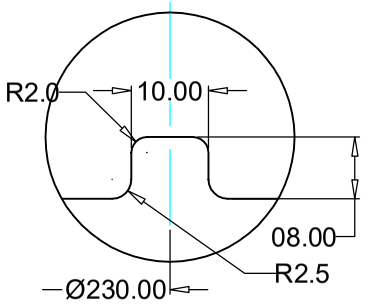

ENLARGED VIEW 'A'

VAR.00	REMARKS	VAR NO.	ITEM NO.	DESCRIPTION	STD	DRAWING NO.	IT.NO. / VAR	MATL. CODE / MATL. SPECN.	C	UNIT	UNIT WT. / QTY.	GS
			01	LT INSERT		RD DG 4 26 1133 1000		HE-30			01	

TYPE OF PRODUCT

NAME OF CUSTOMER

145kV RIP

BHARAT HEAVY ELECTRICALS LTD.
HYDERABAD

	NAME	SIGN.	DATE	NO.OF VAR.
DRN	Hari R		20.11.20	
CKD	Sreenivasu G		20.11.20	
APPD	MM Rao		20.11.20	01

REV.	DATE	ALTERED / CHECKED	REV.	DATE	ALTERED / CHECKED
ZONE			ZONE		

DEPT. / CODE	GRADE OF TOL. DIM. C/M/F	SCALE	WEIGHT(KG)	REF. TO	ITEM NO.	NO.OF ITEMS
		NTS		RD DG 4 26 1133 0000		

TITLE: ALUMINUM FLANGE

CARD CODE

DRAWING NO.: RD DG 4 26 1133 1000 — REV. 00

SHEET NO. — NO. OF SHEETS

THE INFORMATION ON THIS DOCUMENT IS THE PROPERTY OF BHARAT HEAVY ELECTRICALS LIMITED.
IT MUST NOT BE USED DIRECTLY OR INDIRECTLY IN ANY WAY DETRIMENTAL TO THE INTEREST OF THE COMPANY.

REF. DRG. NO. | SIGN. AND DATE | INVENTORY NO.