DRG. NO. RD DG 42611333000

FIRST ANGLE PROJECTION

(ALL DIMENSIONS ARE IN mm)

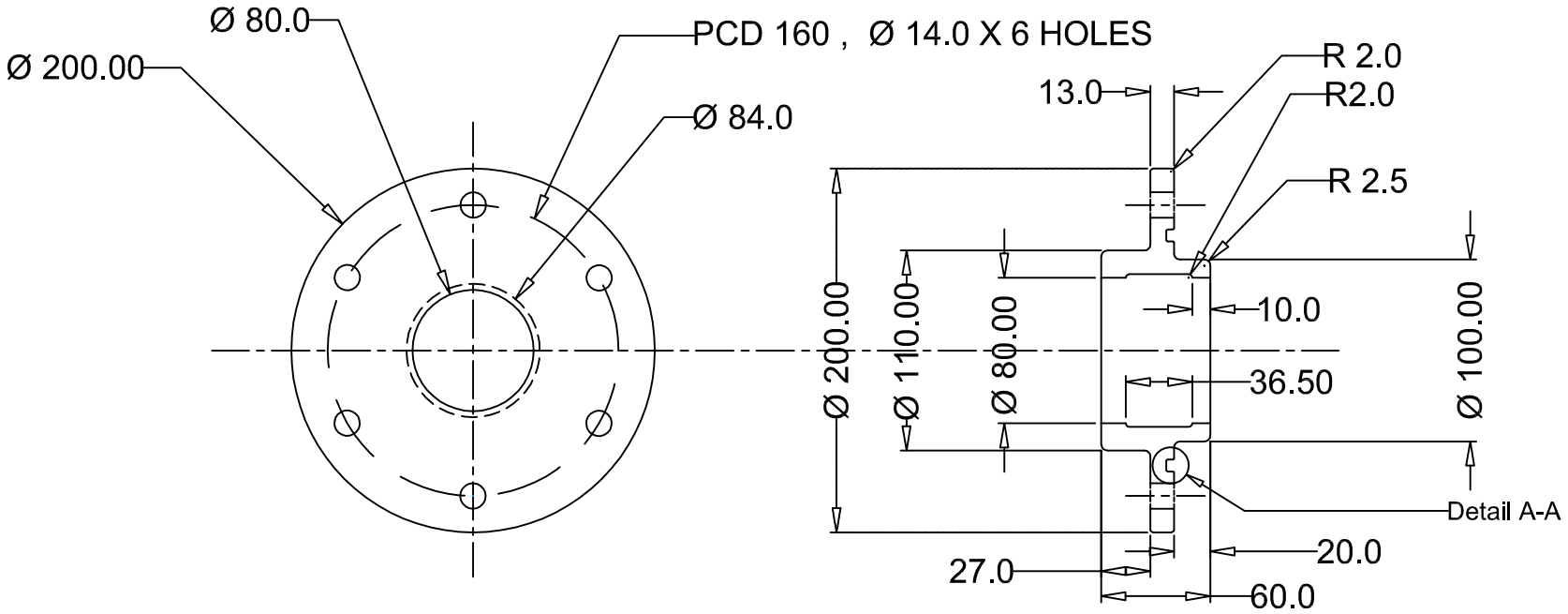

Detail A-A

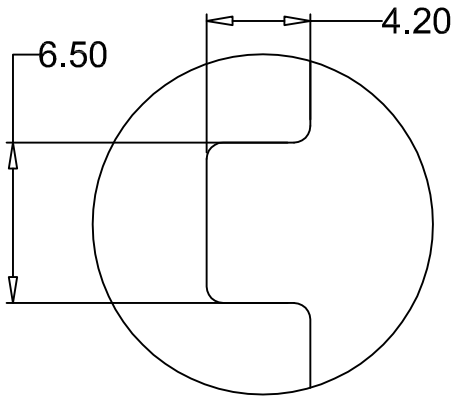

1. MATERIAL AL HE-30

VAR.00	REMARKS	VAR NO.	ITEM NO.	DESCRIPTION	STD	DRAWING NO.	IT.NO. / VAR	MATL. CODE / MATL. SPECN.	A C	UNIT	UNIT WT. / QTY.	GS	ZONE

TYPE OF PRODUCT: Electrical Bushing

NAME OF CUSTOMER

BHARAT HEAVY ELECTRICALS LTD.
HYDERABAD

	NAME	SIGN.	DATE	NO.OF VAR.
DRN	Hari R		04.08.19	
CKD	Hari R		04.08.19	
APPD	S Karunakar		04.08.19	

REV.	DATE	ALTERED / CHECKED	REV.	DATE	ALTERED / CHECKED
ZONE			ZONE		

DEPT. | CODE | GRADE OF TOL. DIM. C/M/F | SCALE | WEIGHT(KG) | REF. TO | ITEM NO. | NO.OF ITEMS

TITLE: L T INSERT

CARD CODE

DRAWING NO.: RD DG 42611333000

REV.

SHEET NO. | NO. OF SHEETS

REF. DRG. NO. | SIGN. AND DATE | INVENTORY NO.

THE INFORMATION ON THIS DRAWING IS THE PROPERTY OF BHARAT HEAVY ELECTRICALS LIMITED.
IT MUST NOT BE USED DIRECTLY OR INDIRECTLY IN ANY WAY DETRIMENTAL TO THE INTEREST OF THE COMPANY.