CAUTION

THIS DRAWING IS OUR SOLE PROPERTY AND SHOULD NOT BE USED IN ANY FORM FOR ANY OTHER PURPOSE WITHOUT THE WRITTEN PERMISSION OF

BHARAT HEAVY ELECTRICALS LTD.,
TIRUCHIRAPALLI-14

INDEX NO. 39 - 607

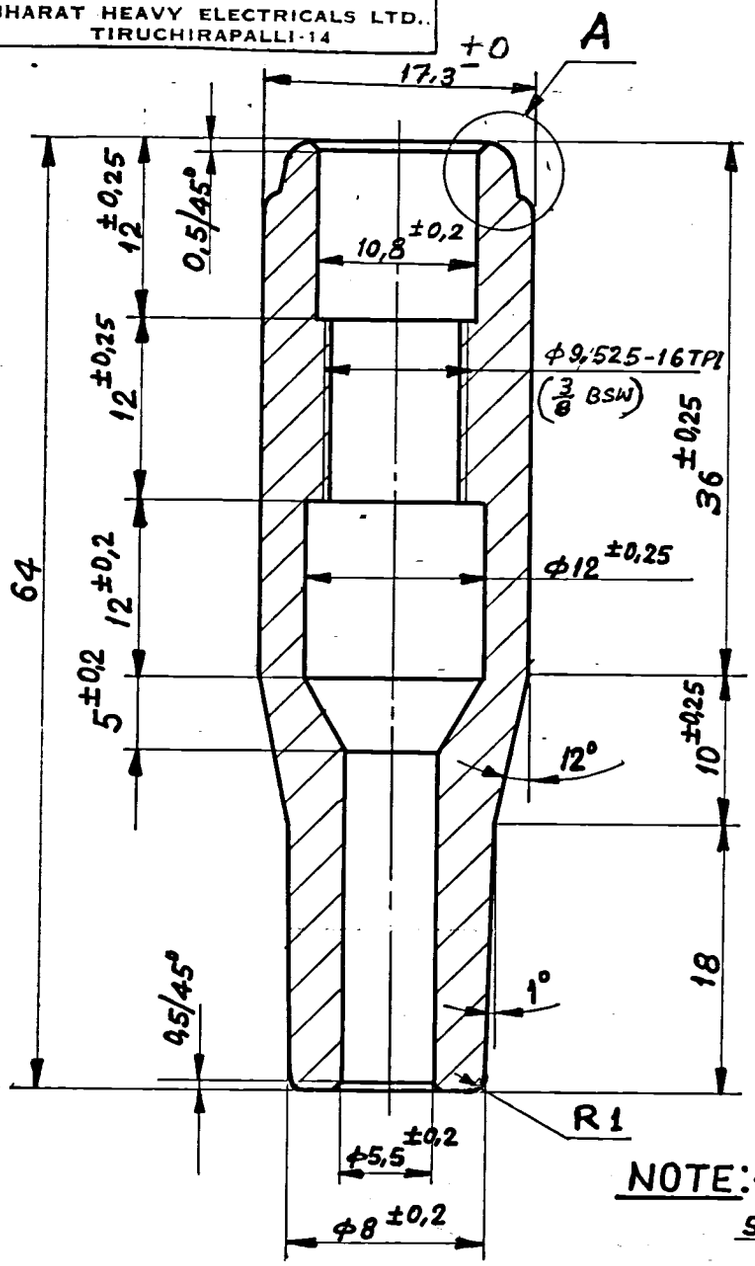

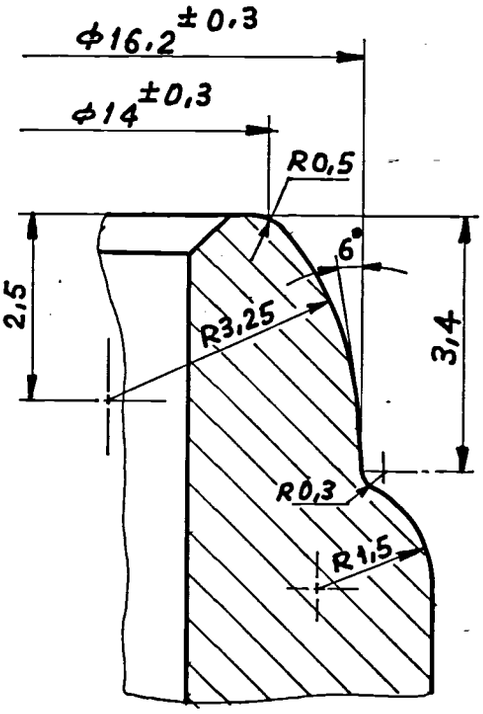

DETAIL - A
SCALE 10:1

NOTE:-

STAMP ON EACH NOZZLE AS "BHEL-45".

10A43

NO. OF PIECES	DESCRIPTION	SEMI-PRODUCT	FINAL MATERIAL	INITIAL MATERIAL	SCRAP SORT	NET wt (kg)	GROSS wt (kg)	DRAWING NO.	ITEM NO.
			CERAMIC						

REMARKS

TOTAL NET wt (kg) EC:- 10A 43

SCALE			REFERENCE	ALTERATIONS	DATE	SIGNATURE	INDEX
2:1 (10:1)	DRAWN	R. Sivaramakrishnan					
	CHECKED	K. M. B. Samy					
	APPROVED						
	STDS. OFFICER						
	DATE	09-12-86					

MACHINE WELDING MACHINE

TYPE: GENERAL

INV. NO.

TITLE:

NOZZLE
[TIG TORCH]

DRAWING NO.

4-M-10a-22808 43

NO. OF SHEETS

SHEET NO.