FIRST ANGLE PROJECTION (ALL DIMENSIONS ARE IN mm)

| REV. | DATE | ALTERED / CHECKED | REV. | DATE | ALTERED / CHECKED |
|---|---|---|---|---|---|
| | | | | | |

GEN. DIM. LIMITS , FITS , & TOLERANCES AS PER P.S :- HY023026

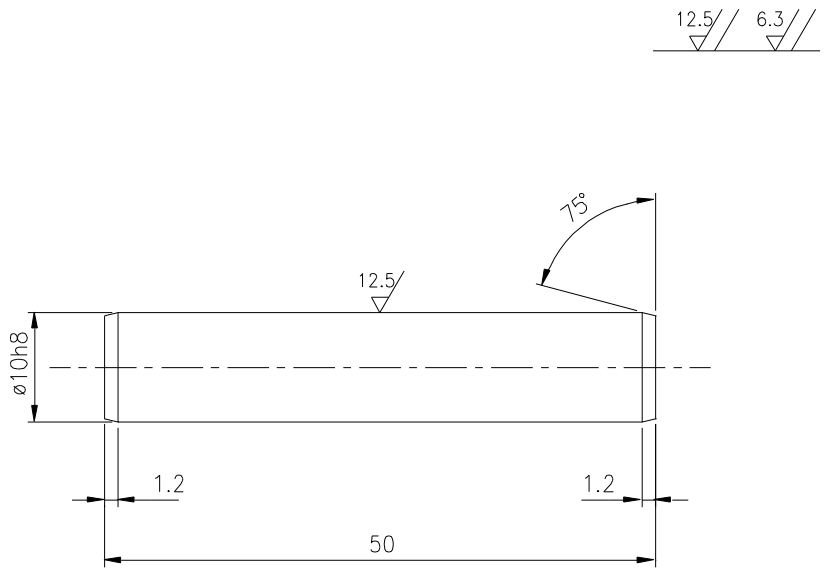


-00

XX VAR

| REMARKS | ITEM NO | DESCRIPTION | STD | MATL. CODE / MATL. SPEN. | A/C | UNIT | UNIT Wt. / QTY. |
|---|---|---|---|---|---|---|---|
| | | ø 16 X 53 | | 103 05 11 006 / En 8 | | | - / - |

BHARAT HEAVY ELECTRICALS LTD. HYDERABAD

| | NAME | SIGN. | DATE | NO.OF VAR. |
|---|---|---|---|---|
| DRN. | P.S.P. | | 24.10.80 | N.A. |
| CHD. | A.C.H. | | 24.10.80 | |
| APPD. | D.S.R. | | 24.10.80 | |

| DEPT. I.T.D. / CODE 415 | UNTOL. DIM. GR. ~~C/M/F~~ | SCALE 2:1 | WEIGHT (KG) 0.008 | REF. TO ASSY DRG. N.A. | ITEM NO. N.A. | NO.OF ITEMS N.A. |
|---|---|---|---|---|---|---|

TITLE: CYLINDRICAL PIN (ø10h8X50)

CARD CODE

DRAWING NO. 4-307-25-00012 REV. 00

SHT No. 1 NO OF SHT. 1


BHARAT HEAVY ELECTRICALS LIMITED.
THE INFORMATION ON THIS DOCUMENT IS THE PROPERTY OF
IT MUST NOT BE USED DIRECTLY OR INDIRECTLY IN ANY WAY DETRIMENTAL TO THE INTREST OF THE COMPANY


COMP. FILE NAME E7250012

REF. DRG. NO. 5-11-4391

SIGN. AND DATE

INVENTORY NO