NATIONAL THERMAL POWER CORPORATION LTD.

NABINAGAR SUPER THERMAL POWER PROJECT
STAGE – II (3X660 MW)

TECHNICAL SPECIFICATION
FOR
AGITATORS

SPECIFICATION NO.: PE- TS- 457- 571- 18000-A001, Rev.- 01

BHARAT HEAVY ELECTRICALS LTD
POWER SECTOR
PROJECT ENGINEERIING MANAGEMENT
NOIDA

	TITLE: 3x660 MW NABINAGAR STPP TECHNICAL SPECIFICATION FOR AGITATORS	SPECIFICATION No: PE-TS-457-571- **18000-A001**	
		SECTION – I & II	
		REV. 01	DATE: SEP. 2020
		SHEET : 1 OF 1	

CONTENTS

SECTION – I

	TITLE			Page No.
Sub-Section-A	INTENT OF SPECIFICATION			3
Sub-Section-B	PROJECT INFORMATION WITH WIND AND SEISMIC DESIGN CRITERIA			7
Sub-Section-C	TECHNICAL SPECIFICATIONS			
	Sub Section-C1	SPECIFIC TECHNICAL REQUIREMENT– MECHANICAL		39
	Sub Section-C2	CUSTOMER SPECIFICATION		60
		C2 - A	TECHNICAL REQUIREMENT	
		C2 - B	PROJECT SPECIFIC GENERAL REQUIREMENTS INCLUDING:	
			GENERAL TECHNICAL REQUIREMENT	
			QUALITY ASSURANCE	
			FUNCTIONAL GUARANTEES	
		C2 - C	PAINTING SPECIFICATION	
	Sub Section-C3	TECHNICAL SPECIFICATION (ELECTRICAL PORTION)		223
Sub Section-D	ANNEXURE-I	LIST OF MAKES OF SUB-VENDOR ITEMS		265
	ANNEXURE-II	MANDATORY SPARE LIST		279
	ANNEXURE-III	INPUT DRAWINGS (GAD OF TANKS)		282
	ANNEXURE-IV	MASTER DRAWING LIST WITH SCHEDULE OF SUBMISSION		299
	ANNEXURE-V	SEA-WORTHY PACKING		303

SECTION – II

SUB SECTIONS	TITLE	Page No.
Annexure-1	LIST OF DOCUMENTS TO BE SUBMITTED WITH BID	357
Annexure-2	COMPLIANCE CUM CONFIRMATION CERTIFICATE	358
Annexure-3	PRE BID CLARIFICATION SCHEDULE	360
Annexure-4	DEVIATION SHEET (COST OF WITHDRAWAL)	361
Annexure-5	ELECTRICAL LOAD DATA	362
Annexure-6	VOID	-
Annexure-7	LIST OF TOOLS & TACKLES	363
Annexure-8	AGITATOR SCHEDULE	365
Annexure-9	VOID	-
Annexure-10	SCHEDULE OF GUARANTEES	368
Annexure-11	ATTACHMENT 3K	369 – 381.

	TITLE: 3x660 MW NABINAGAR STPP TECHNICAL SPECIFICATIONS FOR AGITATORS	SPECIFICATION No: PE-TS-457-571-18000-A001	
		SECTION-I, SUB-SECTION-A	
		REV. 01	DATE: SEP. 2020
		SHEET : 1 OF 1	

INTENT OF SPECIFICATION

	TITLE: 3x660 MW NABINAGAR STPP TECHNICAL SPECIFICATIONS FOR AGITATORS	SPECIFICATION No: PE-TS-457-571-18000-A001	
		SECTION-I, SUB-SECTION-A	
		REV. 01	DATE: SEP. 2020
		SHEET : 1 OF 3	

1.0 **SCOPE OF ENQUIRY/ INTENT OF SPECIFICATION**

1.1 The specification covers Supply part, Services part and Mandatory spares comprising of design (i.e. Preparation and submission of drawing /documents including "As Built" drawings and O&M manuals), engineering, manufacture, fabrication, assembly, inspection / testing at vendor's & sub-vendor's works, painting, maintenance tools & tackles, fill of lubricants & consumables till handing over, mandatory spares along with spares for erection, start-up and commissioning, forwarding, proper packing, shipment and delivery at site, assembly AND services part covers supervision services for erection & commissioning, trial run at site and carrying out Performance guarantee tests at site, training of customer/ client O&M staff covering **all aspects of the Agitator** including Operation & Maintenance, Troubleshooting etc., training of customer at manufacturer's works (3 persons for 2 days including lodging and boarding) & handover in flawless condition of the package to the customer complete with all accessories for the total scope defined as per BHEL NIT & tender technical specification, amendment & agreements till placement of order for Flue Gas Desulphurization (FGD) plant of 3x660 MW NABINAGAR STPP, Aurangabad, Bihar, M/s Nabinagar power generating company private limited (NPGCL), a Joint Venture between Govt. of Bihar and NTPC Ltd. The following points may be noted.

a. Agitators are envisaged in various tanks, details of which are given in Technical Information of Agitators.

b. Bidder shall assume full unit responsibility for the entire equipment assembly and make all possible efforts to comply strictly with the requirements of this specification and other specifications/attachments to inquiry/order.

c. The Bidder shall offer only proven design which meets the Provenness /Pre-qualification requirement of NTPC. Necessary document evidences as per Attachment-3K for qualification shall be submitted along with the bid. If bidder doesn't meet the specified provenness criteria, their offer will be rejected.

1.2 The contractor shall be responsible for providing all material, equipment & services, which are required to fulfil the intent of ensuring operability, maintainability, reliability and complete safety of the complete work covered under this specification, irrespective of whether it has been specifically listed herein or not. Omission of specific reference to any component / accessory necessary for proper performance of the equipment shall not relieve them of the responsibility of providing such facilities to complete the supply, erection and commissioning, performance and guarantee/demonstration testing of **Agitators.**

1.3 It is not the intent to specify herein all the details of design and manufacture. However, the equipment / system shall conform in all respects to high standards of design, engineering and workmanship and shall be capable of performing the required duties in a manner acceptable to purchaser who will interpret the meaning of drawings and specifications and shall be entitled to reject any work or material which in his judgement is not in full accordance herewith.

1.4 The extent of supply under the contract includes all items shown in the drawings, notwithstanding the fact that such items may have been omitted from the specification or

schedules. Similarly, the extent of supply also includes all items mentioned in the specification and /or schedules, notwithstanding the fact that such items may have been omitted in the drawing. Similarly, the extent of supply also includes all items required for completion of the system for its safe, efficient, reliable and trouble free operation.

1.5 Items though not specifically mentioned but needed to make the system complete as stipulated under these specifications are also to be furnished unless otherwise specifically excluded.

1.6 The general terms and conditions, instructions to tenderer and other attachment referred to elsewhere are hereby made part of the tender specifications. The equipment / material and works covered by this specification is subject to compliance to all the attachments referred in the specification. The tenderer shall be responsible for adherence to all requirements stipulated herein.

1.7 While all efforts have been made to make the specification requirement complete & unambiguous, it shall be bidders' responsibility to ask for missing information, ensure completeness of specification, to bring out any contradictory / conflicting requirement in different sections of the specification and within a section itself to the notice of BHEL and to seek any clarification on specification requirement in the format enclosed under Sec.-III of the specification **within 10 days of receipt of tender documents**. In absence of any such clarifications, in case of any contradictory requirement, the more stringent requirement as per interpretation of Purchaser/Customer shall prevail and shall be complied by the bidder without any commercial implication on account of the same. Further in case of any missing information in the specification not brought out by the prospective bidders as part of pre-bid clarification, the same shall be furnished by Purchaser/ Customer as and when brought to their notice either by the bidder or by purchaser/ customer themselves. However, such requirements shall be binding on the successful bidder without any commercial & delivery implication.

1.8 Deviations, if any, should be very clearly brought out clause by clause along with cost of withdrawal in the enclosed schedule (in Section -II); otherwise, it will be presumed that the vendor's offer is strictly in line with NIT specification. If no cost of withdrawal is given against the deviation, it will be presumed that deviation can be withdrawn without any cost to BHEL/it's customer.

1.9 In the event of any conflict between the requirements of two clauses of this specification & requirements of different codes/standards and between respective clauses of sub-section C & sub-section D, more stringent clause as per the interpretation of the owner shall apply.

1.10 In case all above requirements are not complied with, the offer may be considered as incomplete and would become liable for rejection.

1.11 Unless specified otherwise, all through the specification, the word contractor shall have same meaning as successful bidder/vendor and Customer/Purchaser/Employer will mean BHEL and/or Customer as interpreted by BHEL in the relevant context. Please refer GCC/SCC for better clarity.

1.12 The equipment covered under this specification shall not be dispatched unless the same have been finally inspected, accepted and dispatch release issued by BHEL/Customer.

1.13 BHEL's Customer's representative shall be given full access to the shop in which the equipment's are being manufactured or tested and all test records shall be made available to him.

1.14 Various codes and standards to be used shall be as indicated in various parts of the specification. In case bidder uses any standard other than those indicated in the specification, the onus of establishing equivalence of the same with the specified standards will rest with the bidder and acceptance of the same shall be sole prerogative of customer. The bidder will also arrange for BHEL a copy of the standards in ENGLISH language. The cost of such service will be deemed to have been included by the bidder in the total cost of the package. BHEL will not entertain any additional cost on account of the same.

1.15 All text/ numeric in the document / drawings to be generated by the successful bidder will be in English language only.

1.16 The bidder's offer shall not carry any sections like clarification, interpretations and /or assumptions.

Note:

a) Bidder to note that BHEL reserves the right for drawing/document submission through web based Document Management System. Bidder would be provided access to the DMS for drawing/document approval and adequate training for the same. Detailed methodology would be finalized during the kick-off meeting. Bidder to ensure following at their end.

• Internet explorer version – Minimum Internet Explorer 7.

• Internet speed – 2 mbps (Minimum preferred).

• Pop ups from our external DMS IP (124.124.36.198) should not be blocked.

• Vendor's internal proxy setting should not block DMS application's link (http://dmsserver.bhelpem.com/Wrench%20Web%20Access/Login.aspx.).

	TITLE: 3x660 MW NABINAGAR STPP TECHNICAL SPECIFICATION FOR AGITATORS	SPECIFICATION No: PE-TS-457-571-18000-A001	
		SECTION-I, SUB-SECTION-B	
		REV. 01	DATE: SEP 2020
		SHEET : 1 OF 1	

PROJECT INFORMATION WITH WIND AND SEISMIC DESIGN CRITERIA

CLAUSE NO.	PROJECT INFORMATION
1.00.00	BACKGROUND A Joint Venture Agreement was signed between NTPC and BSEB/ Govt. of Bihar on 14.02.2008 for Establishment and Operation & Maintenance of 3x660 MW capacity coal based thermal power project near Nabinagar Distt Aurangabad Bihar and thereafter a Joint Venture company namely, Nabinagar Power Generating Company Private Limited (NPGCPL) was incorporated with equity structure of 50% each by NTPC and BSEB on 09.09.2008.The project shall be a mega project and shall be implemented during XII Plan period.
1.01.00	Location The plant is located in Aurangabad district of Bihar at a distance of about 15 kms. from Barun in Aurangabad district of Bihar and is approachable from NH-2 through a 20 kms (approx.) long single lane metalled road. The Aurangabad city is about 55 kms. from project site. Nearest railway station is Ankorha on Sone – Garwa Road Section of Eastern Central Railway at about 1.0 Kms from the project site. Airport The nearest airport at Gaya is at a distance of about 120 Kms from project site. The distances of site from Patna Airport and Varansi Airport are about 250 Kms & 220 Kms respectively. Vicinity plan of the proposed project is placed at Annexure -I
1.02.01	Land About 2500 acres of land required for the project (main plant, township, ash disposal areas and corridors etc.) has been identified Govt. of Bihar have accorded in-principle clearance for availability of land vide letter dated 15.06.2007 and 27.02.2009.
1.02.02	Coal Coal requirement for the project is estimated about 11.25 million tonnes/annum corresponding to 90% PLF Likely coal source for the project is North Karanpura coalfields of CCL. Application for Long Term Coal Linkage has been submitted to Ministry of Coal, Govt. of India on 21.06.2007 & 06.10.2008.
1.02.03	Water The project site is located near the river Sone and the make up water requirement for the project is proposed to be drawn from the pondage created by Indrapuri Barrage on river Son. which is about 3 kms from the proposed site. Make up water requirement for this project would be about 7550 Cu.M/hr with ash water recirculation system and about 8480 Cu.M/hr with once-through ash water system.

CLAUSE NO.	PROJECT INFORMATION
	Govt. of Bihar has accorded water commitment for availability of 125 cusecs of water vide letter dated 06.06.2007.
1.03.00	Railway Siding Employer intends to construct the Railway siding to project site from the nearest existing railway line. However, the same may not be available to the bidder for his use to transport equipment & material. Bidder may visit the site and acquaint themselves with the facilities available.
1.04.00	(i) Coal Quality Parameters / Fuel Oil Characteristics & Plant Water details: The coal quality parameters and Fuel oil Characteristics are indicated in Table-1 & Table-2A & 2B resp. below. Water data (ii) Process water: Source: Terminal point: Process water quality is based on COC given in Table-3. (iii) Clarified water: Terminal point: Clarified water quality is indicated in Table-3. (iv) DM water for Equipment cooling water system. Terminal point: DM water quality is indicated in Table-4
1.05.00	Steam Generator and ESP data: refer Table-5.
1.06.00	Drawings are enclosed as per Table-6 for initial overview to the Bidder.
2.00.00	NOT USED
3.00.00	Capacity 3 x 660 MW
4.00.00	Metrological Data Important meteorological data from nearest observatory at Dehri is placed at Annexure -II.
5.00.00	CRITERIA FOR EARTHQUAKE RESISTANT DESIGN OF STRUCTURES AND EQUIPMENT All structures and equipment shall be designed for seismic forces adopting the site specific seismic information provided in this document and using the other provisions in accordance with IS:1893 (Part 1 to Part 4). Pending finalization

NABINAGAR POWER GENERATING CO. PVT. LTD. NPGC

Bharat Heavy Electricals Ltd. Power Sector Marketing

CLAUSE NO.	PROJECT INFORMATION
	of Part 5 of IS:1893, provisions of part 1 shall be read along with the relevant clauses of IS:1893:1984, for embankments. A site specific seismic study has been conducted for the project site. The peak ground horizontal acceleration for the project site, the site specific acceleration spectral coefficients (in units of gravity acceleration 'g') in the horizontal direction for the various damping values and the multiplying factor (to be used over the spectral coefficients) for evaluating the design acceleration spectra are as given at Appendix-I. Vertical acceleration spectral values shall be taken as 2/3rd of the corresponding horizontal values The site specific design acceleration spectra shall be used in place of the response acceleration spectra, given at figure-2 in IS:1893 (Part 1) and Annex B of IS:1893 (Part 4). The site specific acceleration spectra along with multiplying factors specified in Appendix-I includes the effect of the seismic environment of the site, the importance factor related to the structures and the response reduction factor. Hence, the design spectra do not require any further consideration of the zone factor (Z), the importance factor (I) and response reduction factor (R) as used in the IS:1893 (Part 1 to Part 4). Damping in Structures The damping factor (as a percentage of critical damping) to be adopted shall not be more than as indicated below for: a) Steel structures : 2% b) Reinforced Concrete structures : 5% c) Reinforced Concrete Stacks : 3% d) Steel stacks : 2% Method of Analysis Since most structures in a power plant are irregular in shape and have irregular distribution of mass and stiffness, dynamic analysis for obtaining the design seismic forces shall be carried out using the response spectrum method. The number of vibration modes used in the analysis should be such that the sum total of modal masses of all modes considered is at least 90 percent of the total seismic mass and shall also meet requirements of IS:1893 (Part 1). Modal combination of the peak response quantities shall be

CLAUSE NO.	PROJECT INFORMATION
	performed as per Complete Quadratic Combination (CQC) method or by an acceptable alternative as per IS:1893 (Part 1). In general, seismic analysis shall be performed for the three orthogonal (two principal horizontal and one vertical) components of earthquake motion. The seismic response from the three components shall be combined as specified in IS:1893 (Part 1). The spectral acceleration coefficient shall get restricted to the peak spectral value if the fundamental natural period of the structure falls to the left of the peak in the spectral acceleration curve. For buildings, if the design base shear (V_B) obtained from modal combination is less than the base shear ($\bar{V}_B$) computed using the approximate fundamental period (T_a) given in IS:1893:Part 1 and using site specific acceleration spectra with appropriate multiplying factor, the response quantities (e.g. member forces, displacements, storey forces, storey shears and base reactions) shall be enhanced in the ratio of $\bar{V}_B$/ V_B However, no reduction is permitted if V_B is less than V_B. For regular buildings less than 12m in height, design seismic base shear and its distribution to different floor levels along the height of the building may be carried out as specified under clause 7.5, 7.6 & 7.7 of IS:1893 (Part 1) and using site specific design acceleration spectra. The design horizontal acceleration spectrum value (Ah) shall be computed for the fundamental natural period as per clause 7.6 of IS:1893 (Part 1) using site specific spectral acceleration coefficients with appropriate multiplying factor given in Appendix-I. Design/Detailing for Ductility for Structures The site specific design acceleration spectra is a reduced spectra and has an in-built allowance for ductility. Structures shall be engineered and detailed in accordance with relevant Indian/International standards to achieve ductility.

CLAUSE NO.	PROJECT INFORMATION

APPENDIX – I

SITE SPECIFIC SEISMIC PARAMETERS FOR DESIGN OF STRUCTURES AND EQUIPMENT

The various site specific seismic parameters for the project site shall be as follows:

1) Peak ground horizontal acceleration : 0.16g

2) Multiplying factor to be applied to the site specific horizontal acceleration spectral coefficients (in units of gravity acceleration 'g') to obtain the design acceleration spectra

a) for ordinary moment resisting steel frames designed and detailed as per IS:800 : 0.04

b) for braced steel frames designed and detailed as per IS:800 : 0.03

c) for special moment resisting RC frames designed and detailed as per IS:456 and IS:13920 : 0.024

d) For RCC chimney : 0.08

e) For Liquid retaining tanks . 0.048

d) for Steel chimney and Absorber tower : 0.06

d) for design of structures not covered under 2 (a) to 2 (f) above and under 3 below . 0.04

3) Multiplying factor to be applied to the site specific horizontal acceleration spectral coefficients (in units of gravity acceleration 'g') for design of equipment and structures where inelastic action is not relevant or not permitted : 0.08

Note: g = Acceleration due to gravity

The horizontal seismic acceleration spectral coefficients are furnished in subsequent pages.

Bharat Heavy Electricals Ltd. Power Sector Marketing New Delhi-110049

CLAUSE NO.	PROJECT INFORMATION

APPENDIX – I

HORIZONTAL SEISMIC ACCELERATION SPECTRAL COEFFICIENTS
In units of 'g' for BRBCL project

Time Period (Sec)	Damping Factor (as a percentage of critical damping)		
	2%	3%	5%
0.000	1.000	1.000	1.000
0.030	1.000	1.000	1.000
0.050	1.750	1.607	1.443
0.100	3.737	3.060	2.374
0.104	3.904	3.174	2.443
0.123	3.904	3.401	2.753
0.150	3.904	3.401	2.753
0.200	3.904	3.401	2.753
0.250	3.904	3.401	2.753
0.300	3.904	3.401	2.753
0.350	3.904	3.401	2.753
0.400	3.904	3.401	2.753
0.450	3.904	3.401	2.753
0.500	3.904	3.401	2.753
0.516	3.904	3.401	2.753
0.550	3.662	3.401	2.753
0.600	3.357	3.142	2.753
0.607	3.320	3.105	2.753
0.670	3.006	2.813	2.493
0.700	2.877	2.693	2.386
0.750	2.685	2.513	2.227
0.800	2.518	2.356	2.088
0.850	2.369	2.218	1.965
0.900	2.238	2.094	1.856
0.950	2.120	1.984	1.758
1.000	2.014	1.885	1.670
1.050	1.918	1.795	1.590
1.100	1.831	1.714	1.518
1.150	1.751	1.639	1.452
1.200	1.678	1.571	1.392
1.250	1.611	1.508	1.336
1.300	1.549	1.450	1.285
1.350	1.492	1.396	1.237
1.400	1.439	1.346	1.193
1.450	1.389	1.300	1.152
1.500	1.343	1.257	1.113
1.550	1.299	1.216	1.077

Bharat Heavy Electricals Ltd. Power Sector Marketing

NABINAGAR POWER GENERATING CO. PVT. LTD. NPGC

CLAUSE NO.	PROJECT INFORMATION

APPENDIX – I

HORIZONTAL SEISMIC ACCELERATION SPECTRAL COEFFICIENTS
In units of 'g' for BRBCL project

Time Period (Sec)	Damping Factor (as a percentage of critical damping)		
	2%	3%	5%
1.600	1.259	1.178	1.044
1.650	1.221	1.142	1.012
1.700	1.185	1.109	0.982
1.750	1.151	1.077	0.954
1.800	1.119	1.047	0.928
1.850	1.089	1.019	0.903
1.900	1.060	0.992	0.879
1.950	1.033	0.967	0.856
2.000	1.007	0.943	0.835
2.050	0.982	0.920	0.815
2.100	0.959	0.898	0.795
2.150	0.937	0.877	0.777
2.200	0.915	0.857	0.759
2.250	0.895	0.838	0.742
2.300	0.876	0.820	0.726
2.350	0.857	0.802	0.711
2.400	0.839	0.785	0.696
2.450	0.822	0.769	0.682
2.500	0.806	0.754	0.668
2.550	0.790	0.739	0.655
2.600	0.775	0.725	0.642
2.650	0.760	0.711	0.630
2.700	0.746	0.698	0.619
2.750	0.732	0.685	0.607
2.800	0.719	0.673	0.596
2.850	0.707	0.661	0.586
2.900	0.694	0.650	0.576
2.950	0.683	0.639	0.566
3.000	0.671	0.628	0.557
3.050	0.660	0.618	0.548
3.100	0.650	0.608	0.539
3.150	0.639	0.598	0.530
3.200	0.629	0.589	0.522
3.250	0.620	0.580	0.514
3.300	0.610	0.571	0.506
3.350	0.601	0.563	0.499
3.400	0.592	0.554	0.491
3.450	0.584	0.546	0.484

Bharat Heavy Electricals Ltd. Power Sector Marketing New Delhi - 110049

CLAUSE NO.	PROJECT INFORMATION

APPENDIX – I

HORIZONTAL SEISMIC ACCELERATION SPECTRAL COEFFICIENTS
In units of 'g' for BRBCL project

Time Period (Sec)	Damping Factor (as a percentage of critical damping)		
	2%	3%	5%
3.500	0.575	0.539	0.477
3.550	0.567	0.531	0.470
3.600	0.559	0.524	0.464
3.650	0.552	0.516	0.458
3.700	0.544	0.509	0.451
3.750	0.537	0.503	0.445
3.800	0.530	0.496	0.439
3.825	0.527	0.493	0.437
3.850	0.523	0.490	0.434
3.900	0.516	0.483	0.428
3.950	0.510	0.477	0.423
4.000	0.504	0.471	0.418

6.00.00 CRITERIA FOR WIND RESISTANT DESIGN OF STRUCTURES AND EQUIPMENT

All structures shall be designed for wind forces in accordance with IS:875 (Part-3) and as specified in this document. See Annexure – B for site specific information.

Along wind forces shall generally be computed by the Peak (i.e. 3 second gust) Wind Speed method as defined in the standard.

Along wind forces on slender and wind sensitive structures and structural elements shall also be computed, for dynamic effects, using the Gust Factor or Gust Effectiveness Factor Method as defined in the standard. The structures shall be designed for the higher of the forces obtained from Gust Factor method and the Peak Wind Speed method.

Analysis for dynamic effects of wind must be undertaken for any structure which has a height to minimum lateral dimension ratio greater than "5" and/or if the fundamental frequency of the structure is less than 1 Hz

Susceptibility of structures to across-wind forces, galloping, flutter, ovalling etc. should be examined and designed/detailed accordingly following the recommendations of IS:875(Part-3) and other relevant Indian standards.

It should be estimated if size and relative position of other structures are likely to enhance the wind loading on the structure under consideration. Enhancement

CLAUSE NO.	PROJECT INFORMATION
	factor, if necessary, shall suitably be estimated and applied to the wind loading to account for the interference effects. Damping in Structures The damping factor (as a percentage of critical damping) to be adopted shall not be more than as indicated below for: a) Welded steel structures : 1.0% b) Bolted steel structures : 2.0% c) Reinforced concrete structures : 1.6% d) Steel stacks : As per IS:6533 & CICIND Model Code whichever is more critical. ANNEXURE-B SITE SPECIFIC DESIGN PARAMETERS The various design parameters, as defined in IS: 875 (Part-3), to be adopted for the project site shall be as follows: a) The basic wind speed "V_b" at ten b) The risk coefficient "K_1" : 1.07 c) Category of terrain : Category-2
7.00.0	FOUNDATION SYSTEM AND GEOTECHNICAL DATA
7.00.01	Geotechnical data and foundation system for the respective project are enclosed at annexure-III. The corresponding bore logs are enclosed at annexure-IV.
7.00.02	The available soil data is of vicinity of proposed structures, therefore, bidder shall carryout his own detailed soil investigation for facilities under this package and shall be as per the scheme approved by owner. The scheme for geotechnical investigation shall be as given at Clause 7.07.00 and shall be approved by owner before execution. Geotechnical investigation work shall got executed by the Contractor through the agencies as mentioned in Clause No. 7.07.03 However, no time extension shall be given on account of soil investigation carried out by the Bidder. The geotechnical investigation report shall be prepared with detailed recommendations regarding type of foundation and allowable bearing pressure for various structures/ facilities and other soil parameters. The report shall be submitted for Owner's approval prior to commencement of design of foundation.
7.00.03	The Bidder should note that nothing extra whatsoever on account of variation between soil data collected by Owner and that found by the Bidder during geotechnical investigation by him or during execution of works, shall be payable.

CLAUSE NO.	PROJECT INFORMATION
7.00.04	Tank Foundations a) The tanks shall rest on flexible tank pad foundation, resting on sand with concrete ring wall to retain sand. Base of the concrete ring wall shall not rest on the expansive soil, if any. b) Entire loose/ soft soil inside the concrete ring wall shall be removed and shall be filled with sand. Sand for filling shall be clean and well graded conforming to IS 383 with grading Zone I to III. c) Sand shall be spread in layers not exceeding 30cm compacted thickness over the area. Each layer shall be uniformly compacted by mechanical means like plate vibrators, small vibratory rollers, etc to achieve a relative density of not less than 80%. d) Other requirements of tank foundations shall be as per IS 803 and as specified elsewhere in the specifications
7.02.00	Foundation System The requirements for the foundation system to be adopted are as given in subsequent clauses Depending upon the depth of competent strata/stratum, type of structures, functional requirement of facility, extent of cutting / filling, suitable foundation, open or pile shall be adopted with approval of owner
7.02.01	General Requirements a) All structures/equipment shall be supported either on suitable open foundations (isolated, combined, raft) or pile foundations depending on type of structures/facilities, sub-strata, topography etc. b) The roads, ground floor slabs, trenches, pipe pedestals, channels/drains and staircase foundation with foundation loading intensity less than 4 T / M2 may be supported on open / shallow foundations resting on virgin / controlled compacted filled up soil. c) No other foundation (other than as mentioned in (b) above) shall rest on the filled up ground / soil. d) No foundation shall rest on the black cotton soil e) Before execution of work the bidder shall ensure that there is no obstruction to underground/overground facilities like sewer lines, pipe lines etc. Any such damage and remedial/ rectification measures shall be at the contractors cost. f) Bidder shall also ensure that there is no damage to existing nearby foundations and the foundations pertaining to this package are not placed at shallower depth than the nearby foundations If required depth of foundation is deeper than the existing foundations, proper protection shall be provided to existing foundations.

CLAUSE NO.	PROJECT INFORMATION
	g) All foundations shall be designed in accordance with relevant parts of the latest revisions of Indian Standards. h) The water table for design purpose shall be considered at Finished Ground Level. i) A combination of open and pile foundations shall not be permitted under the same equipment / structure / building. j) Foundation for equipments on ground floor For equipments of static weight upto 1.5 T, the equipment may be supported on the ground floor slab by locally thickening the slab. Thickening of the ground floor slab shall be done upto an extent of about 0.6 m beyond the plan area of the equipment on all the sides. Further, the load intensity below the equipment shall be limited to 4T/m2 Other requirements of floor slab and compaction below the floor slab shall be adhered, as specified elsewhere in the specifications. For equipment of static weight more than 1.5 T, the equipment foundation shall be taken to the founding level or shall be built up with PCC from the level as mentioned in the Table 1. The pedestal of equipment foundation or the foundation Block shall be isolated from the adjoining floor slab by providing bitumen impregnated fiber board of minimum 50 mm thick, conforming to IS. 1838 all around the equipment pedestal for the full depth of the floor slab.
7.02.02	Open Foundations In case open foundations are adopted, following shall be adhered to. a) The minimum width of foundation shall be 1.0 m b) Minimum depth of foundation shall be 1.0m below Ground Level. c) It shall be ensured that all foundations of a particular structure/ buildings/ facility shall rest on one bearing stratum. d) Wherever the intended bearing sub-strata is virgin soil stratum but the actual stratum encountered during foundation excavation consists of filled up soil at founding level, under such cases either the foundation shall be lowered completely into the virgin stratum or the filled up soil upto the virgin layers shall be removed and built up through PCC (1:4:8) up to designed foundation level.
7.02.03	Pile Foundations – In case piles are adopted, following shall be adhered to :

Bharat Heavy Electricals Ltd. Power Sector Marketing New Delhi - 110049

NPGC NABINAGAR POWER PVT. LTD.

CLAUSE NO.	PROJECT INFORMATION
	i) The pile foundation shall be of RCC, Cast-in-situ bored piles as per IS:2911. Pile boring shall be done using Rotary Hydraulic Rigs/conventional tripod rig. Two stage flushing of pile bore shall be ensured by airlift technique duly approved by the Employer. If required, temporary or permanent MS liner may be provided for piling. ii) The minimum diameter of pile shall be 600 mm. The allowable load capacity of the pile in different modes (vertical compression, lateral and pullout) shall be as per approved geotechnical report & as enclosed in relevant annexure. iii) Only straight shaft piles shall be used. Minimum cast length of pile above cutoff level shall be 1.0 m iv) The contractor shall furnish design of piles (in terms of rated capacity, length, diameter, termination criteria to locate the founding level for construction of pile in terms of measurable parameter, reinforcement for job as well as test piles, pile load test arrangement, locations of initial test piles etc.) for Engineer's approval. v) The piling work shall be carried out in accordance with IS:2911 (Relevant part) and accepted construction methodology. The construction methodology shall be submitted by the Contractor for Engineer's approval. vi) Number of initial load tests to be performed for each diameter and rated capacity of pile shall be subject to minimum as under. Vertical Lateral Minimum of 2 Nos. in each mode. Uplift vii) The initial pile load test shall be conducted with test load upto three times the estimated pile capacity. In case of vertical compression test (initial test) the method of loading shall be cyclic as per IS:2911 (relevant part). viii) Load test shall be conducted at pile Cut-off Level (COL). If the water table is above the COL the test pit shall be kept dry throughout the test period by suitable de-watering methods. Alternatively the vertical load test may be conducted at a level higher than COL. In such a case, an annular space shall be created to remove the effect of skin friction above COL by providing an outer casing of suitable diameter larger than the pile diameter. ix) Number of routine pile load tests to be performed for each diameter/allowable capacity of pile shall be as under . i) Vertical : 0.5% of the total number of piles provided. ii) Lateral 0.5% of the total number of piles provided

Bharat Heavy Electricals Ltd. Power Sector Marketing New Delhi - 110049

NABINAGAR STPP GENERATING CO. PVT. LTD. NPGC

CLAUSE NO.	PROJECT INFORMATION
	x) The routine tests on piles shall be conducted upto test load of one and half times the allowable pile capacity. Piles for routine load tests shall be approved by the Employer. xi) In case, routine pile load test shows that the pile has not achieved the desired capacity or pile(s) have been rejected due to any other reason, then the Contractor shall install additional pile(s) as required and the pile cap design shall accordingly be reviewed and modified, if required. xii) Testing of piles and interpretation of pile load test results shall be carried out as per IS.2911 (Part-4). Contractor shall ensure that all the measuring equipment and instruments are properly calibrated at a reputed laboratory / institute prior to their use. Settlement / movement of the pile top shall be made by Linear Variable Differential Transducers (LVDT) having a least count of 0.01mm. xiii) The test load on initial test piles shall be applied by means of reaction from anchor piles / rock anchors alone or combination of anchor piles / rock anchors and kentledge with concrete blocks. xiv) Low Strain Pile Integrity test shall be conducted on all test piles and job piles. This test shall be used to identify the routine load test and not intended to replace the use of static load test. This test is limited to assess the imperfection of the pile shaft and shall be undertaken by an independent specialist agency to be approved by Engineering department of Owner. The test equipment shall be of TNO or PDI make or equivalent The process shall confirm to ASTM. xv) High Strain Dynamic Load Test may be carried out for routine load testing of working piles. However, at least two numbers of static routine vertical load tests shall be carried out on pile on which high strain dynamic load test has already been carried out for establishing the correlation between the two tests. In case of discrepancy if any between dynamic and static vertical load tests, then additional static routine vertical load tests shall be conducted as decided by the Engineer and the results of static routine vertical load shall prevail. Number of routine vertical pile load tests as per clause 7.02.03 (ix) shall be total of static routine vertical load test and high strain dynamic load tests. The procedure to carry out the test shall be submitted to the Engineer. The test and equipment shall conform to ASTM D4945-00. The test shall be conducted by an experienced independent test agency approved by the owner. Field data shall be submitted to the site engineer and shall include force velocity curves, pile capacity, simulated static load test curve, net and total pile displacement, pile integrity A (Case pile wave analysis) CAPWAP or equivalent software analysis shall be conducted on the field data for correct capacity estimation and to evaluate end bearing and skin friction components.

CLAUSE NO.	PROJECT INFORMATION
	of the pile. xvi) From load considerations, single pile may be used under a column/tower. In that case, pile shall be connected with tie beams at pile cut off level in both directions. xvii) Contribution of frictional resistance of filled up soil if any, shall not be considered for computation of frictional resistance of piles. xviii) Reinforcement for job piles shall be designed as following: Compression + bending piles: For these piles, the allowable safe pile capacities in compression and bending shall be considered. Tension + bending piles: For these piles, the actual pile forces to be considered. However, maximum 3 types of combinations for varying percentage of tension capacity + bending case may be designed & adopted by contractor for the entire scope of work under this package.
7.03.00	Special Requirements
7.03.01	Details of treatment for foundations / underground structures required to counteract soil / water chemical environment shall be as per detailed geotechnical investigation to be carried out by contractor. Contractor shall carry out chemical analysis during detailed geotechnical investigation and required treatment shall be provided accordingly.
7.04.00	Excavation, Filling and Dewatering
7.04.01	For excavation works, comprehensive dewatering with well point or deep wells arrangement, if required, shall be adopted. Scheme for dewatering and design with all computations and back up data for dewatering shall be submitted for the owner's information. The water table shall be maintained at 0.5m below the founding depth.
7.04.02	Excavation for shallow foundations shall be covered with PCC immediately after reaching the founding level. In case of any local loosening of soil or any loose pockets are encountered at founding level during excavation the same shall be removed and compensated by PCC M7.5. The final layer of about 300 mm thickness above the founding level shall be excavated by suitable means, so as to avoid disturbance to founding stratum.
7.04.03	Backfilling around foundations, pipes, trenches, sumps, pits, plinths, etc. shall be carried out with approved material in layers not exceeding 300 mm compacted thickness (higher thickness of layers upto 500mm with heavy mechanical compacting equipment) and each layer shall be compacted to 90% of standard proctor density for cohesive soils and to 80% of relative density for non-cohesive soils. Rock pieces having size less than 150 mm and interstices filled with soil may be used for backfilling around foundation, plinths etc. and shall be compacted to minimum of 85% of original stack of material after filling the interstices.

CLAUSE NO.	PROJECT INFORMATION
7.04.04	Founding level for trenches/channels shall be decided as per functional requirement. The bottom of excavation shall be properly compacted prior to casting of bottom slab of trenches / channels.
7.04.05	CBR tests for pavement/road design shall be carried out by the Contractor after earth filling (if applicable) has been completed upto the formation level
7.04.06	The contractor shall take all necessary measures during excavation to prevent the hazards of falling or sliding of material or article from any bank or side of such excavation which is more than one and a half meter above the footing by providing adequate piling, shoring, bracing etc. against such bank or sides Adequate and suitable warning signs shall be put up at conspicuous places at the excavation work to prevent any persons or vehicles falling into the excavation trench. No worker should be allowed to work where he may be stuck or endangered by excavation machinery or collapse of excavations or trenches.
7.05.00	EXCAVATION IN ROCK Excavation in rock shall be carried out by mechanical means and if blasting is required for founding of some of the structures under this package, control blasting only shall be carried out.
7.05.01	Controlled blasting shall be done by a specialised agency duly approved by Engineer. All controlled blasting shall be done by using time delay detonators (i.e. excel type).
7.05.02	a) Contractor shall engage an agency expert in blasting such as, NIRM (National Institute of Rock Mechanics), CMPDIL, Central Institute of Mining and Fuel Research Dhanbad, Dept. of Mining of Govt. Institutions etc. to design detailed blasting scheme and get the same approved from Engineer before carrying out the blasting operation. All blasting shall be done as per the approved blasting scheme & initial blasting operations shall be done under the supervision & guidance of the representative of the blasting expert b) All the statutory laws, (Explosives Act etc.) rules, regulations, Indian Standards, etc. pertaining to the acquisition, transport, storage, handling and use of explosives, etc. shall be strictly followed. c) The Contractor shall obtain Licenses from Competent Authorities for undertaking blasting work as well as for procuring, transporting to site and storing the explosives as per explosives act. The Contractor shall be responsible for the safe transport, use, custody and proper accounting of the explosive Materials. d) The Contractor shall be responsible and liable for any accident and injury / damage which may occur to any person or property of the project or public on account of any operations connected with the storage, transportation, handling or use of explosive and blasting operations.

Bharat Heavy Electricals Ltd. Power Sector Marketing New Delhi - 110049

NABINAGAR POWER GENERATING CO. PVT. LTD. NPGC

CLAUSE NO.	PROJECT INFORMATION
7.06.00	Sheeting & Shoring The contractor shall ascertain for himself the nature of materials to be excavated and difficulties, if any, likely to be encountered in excavation while executing the work. Sheet piling, sheeting and shoring, bracing and maintaining suitable slopes, drainage, etc. shall be provided and installed by the Contractor, to the satisfaction of the Engineer.
7.07.00	Geotechnical Investigation The Contractor shall carry out detailed geotechnical investigation in the areas under his scope for establishing the sub-surface conditions and to decide type of foundations for the structures envisaged, construction methods, any special requirements/treatment called for remedial measures for sub-soil/ foundations etc. in view of soft sub-soils, aggressive sub-soils and water, expansive/swelling soils etc. prior to commencement of detailed design/drawings. The Contractor shall obtain the approval for the field testing scheme proposed by him from the Owner before undertaking the geotechnical investigation work.
7.07.01 00	Scheme of geotechnical Investigation
7.07.02.01	Field test shall include but not be limited to the following: Boreholes, Standard Penetration Test (SPT), Dynamic Cone Penetration Test (DCPT), collection of disturbed samples (DS) and undisturbed soil samples (UDS), Trial Pits (TP), Plate Load Tests (PLT), Electrical Resistivity Test (ERT), In situ field permeability tests, collection of water samples, etc.
7.07 02 02	The diameter of borehole shall be minimum 150 mm in soil and 76 mm in rock. The diameter of UDS sampler shall be 100 mm minimum. Core drilling in rock shall be done by using hydraulically feed rotary drill & double tube core barrel with diamond bit.
7.07.02.03	The minimum tests are indicated in Clause No. 7.08.00. Adequate number of tests shall be conducted up to sufficient depth for complete determination of subsoil conditions. The depth of boreholes shall be as specified in Appendix A. SPT shall be carried out in all types of soil deposits and in all rock formations with core recovery up to 20%, met within a borehole. This test shall be conducted at every 3.0 m interval or at change of strata, up to the final depth. SPT 'N' of 100 and above shall be referred as refusal. UDS shall be collected at every 3.0 m interval or at change of strata up to depth of borehole. UDS may be replaced by additional SPT, if SPT'N' value in the strata is above 50.
7.07 02.04	Laboratory tests shall be done as per relevant IS codes. The laboratory tests, not be limited to the following shall be conducted on disturbed and undisturbed soil samples, rock samples & water samples collected during field investigations in sufficient numbers Laboratory Tests on Soil Samples Laboratory tests shall be carried out on disturbed and undisturbed soil samples for Grain Size Analysis, Hydrometer Analysis, Atterberg Limits, Triaxial Shear Tests (UU), Natural Moisture Content, Specific Gravity and Bulk Unit Weight, Consolidation Tests, Unconfined Compression Test, Free swell Index, Shrinkage Limit, Swell

CLAUSE NO.	PROJECT INFORMATION
	Pressure Test, Chemical Analysis test on soil and water samples to determine the carbonates, sulphates, chlorides, nitrates, pH, organic matter and any other chemicals harmful to concrete and reinforcement/ steel. Laboratory Tests on Rock Samples Moisture content, porosity & density, Specific Gravity, Hardness, Soundness, Slake durability index, Unconfined compression test (Both at saturated and in-situ water content), Point load strength index and deformability test (Both at saturated and in-situ water content) shall be carried out on rock samples.
7.07.02.05	Geotechnical investigation (field & laboratory) shall be carried out in accordance with the provisions of relevant Indian Standards. On completion of all field & laboratory work, geotechnical investigation report shall be submitted for Owner's review/approval. The Geotechnical investigation report shall contain geological information of the region, procedure adopted for investigation, field & laboratory observations/ data/ records, analysis of results & recommendations on type of foundation for different type of structures envisaged for all areas of work with supporting calculations. Recommendations on treatment for soil, foundation, based on subsoil characteristics, soft soils, aggressive chemicals, expansive soils, etc. Recommendations on foundation system and the net allowable bearing pressures and pile capacity shall be based on the conservative values of geotechnical investigation data.
7.07 03 00	Geotechnical investigation work shall be got executed by the Contractor through the following agencies. 1. C.E.TESTING COMPANY Pvt. Ltd, Kolkata 2. Cengrs Geotechnica Pvt. Ltd, New Delhi 3. M.K. Soil Testing Laboratory, Ahemdabad 4 SECON Pvt Ltd. Bangalore 5. Soil Engineering Consultants, New Delhi 6. Orbital Infrastructure Consultancy & Research Pvt. Ltd. Cuttack 7. KCT Consultancy Services, Ahemdabad 8. ARKITECHNO Consultants (India) Pvt. Ltd. Bhubaneswar
7.08.00	Geotechnical Investigation Scheme
a)	Boreholes (Minimum)

S.N	Structure	Spacing/Number of borehole	Depth of borehole	Remarks
1	FGD	Minimum 14 Nos.	Depth of boreholes shall be 25m to 35m	Depth of

CLAUSE NO.	PROJECT INFORMATION				
	2	Crusher House	Minimum 2 Nos.	Depth of boreholes shall be 25m to 35m.	boreholes shall be as mentioned in column "Depth of Borehole" or 5m continuous in rock with RQD > 25% whichever is earlier
	3	Gypsum and Lime storage area	Minimum 10 Nos.	Depth of boreholes shall be 15m to 25m	
	4	Other Structure/Facility	Minimum 2 Nos. boreholes under each area / facility	15 to 20 m	
	5	Chimney	Minimum 2 Nos.	30 to 35m	
	b)	Other Field Tests (Minimum)			
	1	Cyclic Plate Load Test (CPLT)	3 nos	Test Depth from 2 to 4 m	
	2	Trial Pit (TP)	5 Nos.	Depth - 3 m	
	3	In Situ Permeability Test In Boreholes	In minimum 3 Nos of boreholes	Tests shall be conducted at depths of 1.0m, 3.0m, 5.0m, 8.0m and 12.0m	
	4	ERT	Minimum 10 Nos.		

- Depth and location of Boreholes and other field tests (PLT, ERT, field permeability tests etc.) shall be approved by Owner before execution of geotechnical investigation work
- Investigation in any other building / structure / facilities / trestles which are not mentioned above shall also be carried out, if required, by the bidder for the facilities under his scope.

NABINAGAR POWER GENERATING CO. PVT. LTD. NPGC

Bharat Heavy Electricals Ltd. Power Sector Marketing New Delhi

CLAUSE NO.	PROJECT INFORMATION

Annexure-III (New Nabinagar-I)

SOIL DATA AND FOUNDATION SYSTEM

Employer has carried out geotechnical investigation in the areas near to this package. Logs of representative boreholes to be used for bidder's information in the vicinity of proposed area are enclosed at Annexure-II. The bidder is required to carry out geotechnical investigation as per clause no 7.07.00 and ascertain the pile capacity and bearing capacity The onus of correct assessment / interpretation and understanding of the existing subsoil condition / data is on the Bidder. Ground water table is encountered at a depth of about 12.0 to 14 0m below natural ground level (NGL) at the time of investigation. Fluctuation may occur in ground water table due to seasonal variation. The natural ground level is varying as per enclosed contour/spot level drawing.

a) The foundation system to be adopted for different structures shall be as given in Table – 1 below

2.00.00 Table – 1: Net Allowable Bearing Pressure

STRUCTURE	TYPE OF FOUNDATION TO BE ADOPTED
FGD and related structures	Open/Piles

b) During design the Allowable Bearing Pressure shall be as furnished in Table-2. Bidder is required to carry out geotechnical investigation in this area. The allowable bearing pressure shall be adopted after approval of geotechnical investigation report by owner. However, the maximum allowable bearing pressure shall be as per the approved geotechnical report and shall be limited to the values as furnished in Table-2.

3.00.00

4.00.00 Table – 2: Net Allowable Bearing Pressure

Structure	Founding Level in RL	Net Allowable Bearing Pressure T/m^2		
		Isolated / Strip		Rafts (width > 6m) for 75mm settlement
		width upto 6 m for 25mm settlement	Width upto 6m for 40mm settlement	
FGD and related structures	1.5 m below NGL	5.0	6.0	7.0
	2.5 m below	6.0	7.0	8.0

Bharat Heavy Electricals Ltd. Power Sector Marketing New Delhi

NABINAGAR POWER GENERATING CO. PVT. LTD. NPGC

CLAUSE NO.	PROJECT INFORMATION

	NGL			
	3.5 m below NGL	9.0	10.0	12.0

The net allowable bearing pressure higher than above mentioned values shall not be permitted. At intermediate levels the bearing capacity shall be same as the net allowable bearing pressure corresponding to the immediate shallower level mentioned above.

c) Permissible Settlement of Foundations:

For open foundations, the total permissible settlement and differential settlement shall be governed by IS: 1904 and from functional requirements whichever is more stringent. However, total settlement shall be restricted to the following:

Isolated, Strip & Raft (Mill foundations/machine foundation)	25 mm
Isolated & Strip (Other than Mill foundations/machine foundation)	40 mm
Raft (widths greater than 6 m) (Other than Mill foundations/machine foundation)	75 mm

In case the total permissible settlement is to be restricted to less than as above specified from functional requirements, then the net allowable bearing pressure shall be reduced after review in consultation with Engineer.

d) The diameter of pile, minimum length and maximum allowable capacity of piles shall be as given below:

Area/ Location	Pile Diameter (mm)	Minimum Length of Bored Pile Below Cut-off Level (m)	Safe Load Capacity in		
			Vertical Comp. (MT)	Pullout (MT)	Lateral (MT)
FGD and related structures	600	26.0	140.0	45.0	7.0
	760	27.0	250	75.0	12.5

- Cut off Level (COL) is assumed at 3.0 m below FGL (RL (+) 121.2m). If the COL is shallower than the assumed COL, then the length of the pile shall be increased accordingly.

e) The criteria for Pile Termination (founding level) shall be as given below:

NPGC

CLAUSE NO.	PROJECT INFORMATION

Cement Type	Ordinary Portland Cement (OPC)/Portlanld Pozzolana Cement (PPC)
Concrete Grade	As specified elsewhere in the specifications
Type of Reinforcement	As specified elsewhere in the specifications
Cover to Reinforcement	As specified elsewhere in the specifications

The termination level of the pile shall be decided based on the following criterion

i) Minimum length of the pile below COL (cut off level) shall be as specified above

ii) The minimum pile length for each group of piles shall be determined based on the nearest borelog. A minimum embedment of 4.0m into the very dense sand strata with SPT 'N' value greater than 40 as observed in such borelog shall be ensured, while deciding the minimum length of pile. For pile termination, SPT 'N' values shall be used from the nearby borelog data. The boreholes are in the bidder's scope and shall be conducted as per the enclosed scheme.

iii) However, in no case the length of pile shall be less than the minimum length determined as in (i) or (ii) above whichever is longer, for that pile group.

g) Special Requirements:

1) Chemicals in ground water and subsoil, as observed during investigation are:

Chemical	SO_3	Chlorides	pH
Ground Water	35 -40	15 - 22 ppm	7.2 - 7.7
Sub-soil	0.01 - 0.02%	0.016 -0.02%	7.0 - 9.0

2) In view of the above the following shall be adopted for all foundations and sub-structures.

Bharat Heavy Electricals Ltd. Power Sector Marketing New Delhi - 110049

CLAUSE NO.	PROJECT INFORMATION

ANNEXURE – I

EXHIBIT - 1

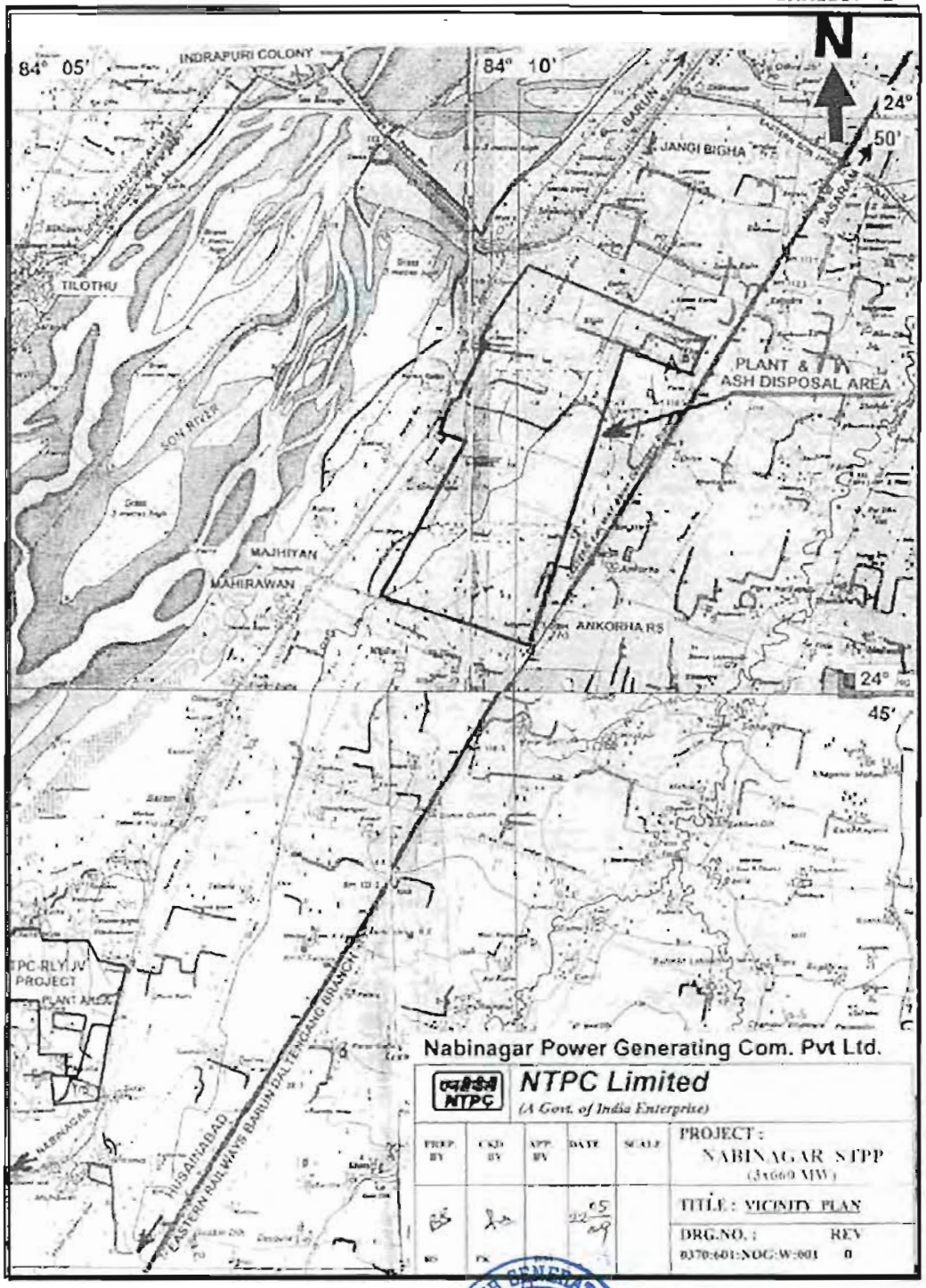

NABINAGAR POWER GENERATING CO. PVT. LTD. NPGC

Bharat Heavy Electricals Ltd. Power Sector Marketing

CLAUSE NO.

PROJECT INFORMATION

ANNEXURE - I

SHEET 1 OF 2

जलवायवी सारणी
CLIMATOLOGICAL TABLE

स्टेशन : देहरी
STATION : Dehri

BASED ON OBSERVATIONS FROM 1951 TO 1980

Month	Station Level	Mean Daily Max	Mean Daily Min	Daily Max	Daily Min	Highest in the month	Lowest in the month	Extremes Highest	Date and year	Extremes Lowest	Date and year	Humidity Relative humidity	Humidity Vapour pressure	Cloud amount All clouds	Cloud amount Low clouds	Rainfall Monthly total	No. of rainy days	Total in wettest month with year	Total in driest month with year	Heaviest fall in 24 hours	Date and year	Mean wind speed
		Air Temperature														Rainfall						
		Mean						Extremes				Humidity		Cloud amount								
		°C	°C	°C	°C	°C	°C	°C		°C		%	hPa	Oktas	Oktas	mm		mm	mm	mm		m/s
जनवरी JAN	I	10084.9	15.1	12.6	23.8	10.1	27.8	8.1	30.0	26 1958	1.0	18 1977	76 63	12.7 12.5	1.7 1.8	0.9 1.1	47.5	3.2	84.0 1980	9.0	81.0	27 1950	3.9
फरवरी FEB	I	10023.5	18.5	14.3	27.4	12.9	32.2	9.3	35.3	23 1964	3.0	11 1974	62 60	12.9 17.5	1.5 1.3	0.7 2.1	41.2	4.3	103.3 1962	0.0	22.8	05 1915	4.9
मार्च MAR	I	9999.2	24.5	17.2	33.2	17.7	38.5	12.2	41.5	31 1973	5.4	03 1976	40 27	13.7 14.8	1.5 1.3	0.5 0.9	33.7	4.2	68.9 1956	0.0	19.7	16 1943	5.8
अप्रैल APR	I	9952.2	30.9	20.2	39.0	23.4	42.2	17.8	44.4	23 1973	10.5	04 1976	35 27	15.2 15.3	1.3 1.3	0.3 0.4	7.2	0.7	48.3 1918	0.0	43.2	04 1914	6.9
मई MAY	I	9907.7	33.3	23.2	41.1	25.7	44.7	21.3	46.7	21 1951	12.8	19 1978	41 32	20.2 17.7	1.2 1.4	0.4 0.9	49.8	1.2	103.7 1911	0.0	96.0	31 1914	6.6
जून JUN	I	9867.8	32.2	25.8	39.5	26.7	44.6	22.7	47.2	03 1966	14.8	13 1975	51 49	24.2 26.8	2.9 4.3	2.0 2.7	109.5	8.0	505.4 1961	0.0	220.0	13 1961	6.4
जुलाई JUL	I	9871.1	29.2	26.5	33.4	25.1	37.8	22.4	42.2	01 1962	15.3	15 1978	81 73	32.5 32.5	6.4 6.3	4.8 4.9	395.2	14.5	655.8 1922	57.1 1923	290.4	01 1925	3.8
अगस्त AUG	I	9888.1	28.6	25.5	32.3	25.0	35.0	22.7	39.1	03 1972	15.8	23 1978	82 79	33.8 35.4	6.2 6.2	4.5 5.1	377.9	13.0	749.3 1924	78.8 1975	254.5	14 1910	4.3
सितम्बर SEP	I	9927.7	28.3	25.9	32.2	24.4	34.3	22.0	37.1	32 1979	14.0	19 1976	83 77	34.4 32.8	4.8 4.9	1.6 1.9	193.1	9.4	271.1 1975	23.2 1928	216.4	12 1934	4.4
अक्तूबर OCT	I	9938.8	26.6	23.1	31.3	20.9	34.4	16.7	37.1	11 1974	9.1	31 1975	73 65	21.5 28.1	1.9 1.9	1 1	44.0	3.1	240.1 1928	0.0	150.1	04 1926	3.2
नवम्बर NOV	I	10012.0	21.0	17.4	29.2	14.9	31.5	10.7	35.1	07 1977	2.8	30 1975	65 53	17.3 18.8	1.3 1.8	1.1 2.5	7.7	0.4	105.2 1915	0.0	100.8	29 1915	2.8
दिसम्बर DEC	I	10081.1	16.2	12.6	25.1	10.8	28.2	7.1	31.2	01 1952	0.8	22 1976	76 69	13.7 15.1	1.3 1.2	0.4 1.4	4.9	0.8	47.7 1913	0.0	21.8	21 1940	3.1
वार्षिक योग या मध्यमान ANNUAL TOTAL OR MEAN		9994.3	25.4	20.4	32.2	19.8	45.7	5.4	47.2		7.0		65 61	21.4 20.8	2.8 2.1	1.1	1040.0	53.4	1783.1 1961	536.4 1940	254.5		4.0
स्टेशनों की संख्या NUMBER OF YEARS		30 30	30 30	30 30	30 30	30 30	30 30	30 30	30 30		30 30		30 30	30 30	30 30	30 30	30 30	30 30	30 30	30 30	30 30		30 30

ANNEXURE -II

LOT-IA PROJECTS DESULPHURISATION (FGD) SYSTEM PACKAGE	TECHNICAL SPECIFICATION SECTION-VI PART-A BID DOC. NO. CS-0011-109(1A)-2	SUB SECTION-II-A8 PROJECT INFORMATION NABINAGAR STPP-I (3X660MW)	PAGE - 23 - OF 31

NABINAGAR POWER GENERATING CO. PVT. LTD. NPGC

Bharat Heavy Electricals Ltd. Power Sector Marketing New Delhi - 110049

CLAUSE NO.

PROJECT INFORMATION

ANNEXURE - I
SHEET 2 OF 2

जलवायवी सारणी
CLIMATOLOGICAL TABLE

स्टेशन : देहरी
STATION : Dehri

WEATHER PHENOMENA — No. OF DAYS WITH: FOG, THUNDERSTORM, DUST STORM, SQUALL

WIND — No. OF DAYS WITH WIND SPEED (KM. P. H.); PERCENTAGE No. OF DAYS WIND FROM

CLOUD — No. OF DAYS WITH CLOUD AMOUNT (IN 8 OCTAS); No. OF DAYS WITH LOW CLOUD AMOUNT OKTAS

VISIBILITY — No. OF DAYS WITH VISIBILITY

MONTH		FOG	THUNDERSTORM	DUST STORM	SQUALL	0-3	4-10	11-16	17 & ABOVE	N	NE	E	SE	S	SW	W	NW	CALM	0	1-2	3-4	5-7	8	FOG	UP TO 1 Km	1-4 Km	4-10 Km	10-20 Km	OVER 20 Km
जनवरी JAN	I	2.3	0.1	0.4	0.1	0.0	0.0	0	0	30	1	2	3	6	11	20	10	9	6	5	23	0	2	2	6	27	0	0	1	3	0	0.1	0.4	0.5	4.0	18.0
	II							0	0	30	1	18	11	5	1	3	6	31	17	6	24	0	1	2	4	27	0	0	1	3	0	0.0	0.1	0.1	0.7	30.1
फरवरी FEB	I	2.1	0.0	0.2	0.2	0.0	0.0	0	0	28	0	3	2	4	9	17	42	15	7	1	21	0	2	2	3	26	0	0	0	2	0	0.3	0.1	0.3	1.9	25.4
	II							0	0	28	0	13	8	5	2	8	4	43	21	2	22	0	1	2	3	26	0	0	1	2	0	0.0	0.0	0.0	0.6	27.4
मार्च MAR	I	1.6	0.0	0.6	0.1	0.0	0.0	0	0	31	0	3	2	4	10	12	41	18	5	1	23	0	3	2	3	25	0	0	0	2	1	0.0	0.1	0.1	0.8	29.9
	II							0	0	31	0	8	5	4	2	2	5	50	20	0	24	0	2	2	3	29	0	0	0	2	0	0.0	0.2	0.2	1.5	29.1
अप्रैल APR	I	1.0	0.0	0.4	0.2	0.1	0.0	0	0	30	1	3	4	9	12	14	31	16	8	3	22	1	3	2	2	28	0	0	0	1	0	0.0	0.0	0.0	1.1	28.9
	II							0	0	30	0	8	11	8	3	2	8	43	22	1	24	0	2	2	2	29	0	0	0	1	0	0.0	0.0	0.1	0.3	29.6
मई MAY	I	1.2	0.0	0.6	0.0	0.2	0.0	0	0	31	0	5	12	14	17	9	21	12	8	2	25	0	2	2	2	30	0	0	0	1	0	0.0	0.0	0.0	0.2	30.8
	II							0	0	31	0	9	23	10	2	2	5	28	21	0	25	0	2	2	2	30	0	0	0	1	0	0.0	0.0	0.0	0.1	30.8
जून JUN	I	2.2	0.0	0.3	0.0	0.0	0.0	0	0	29	1	8	11	17	19	8	15	13	4	3	11	0	5	5	9	22	0	1	2	5	0	0.0	0.0	0.4	1.9	27.7
	II							0	0	30	0	10	20	21	8	2	4	19	11	1	12	0	3	5	10	19	0	1	2	7	1	0.0	0.1	0.4	2.3	27.2
जुलाई JUL	I	10.0	0.0	2.1	0.0	0.0	0.0	0	0	30	2	5	7	16	23	10	13	10	6	4	3	0	5	7	15	10	0	2	4	15	0	0.0	0.0	0.3	3.9	26.8
	II							0	0	30	4	11	13	20	12	6	11	17	6	4	2	1	5	7	16	10	0	2	5	14	0	0.0	0.0	0.5	6.8	24.7
अगस्त AUG	I	17.6	0.0	3.1	0.0	0.0	0.0	0	0	30	1	5	7	18	27	10	11	10	7	2	3	0	6	9	14	10	0	2	6	13	0	0.0	0.0	0.7	3.7	27.0
	II							0	0	30	1	16	13	22	10	4	5	13	8	3	3	0	5	8	15	10	0	2	6	13	0	0.0	0.7	1.0	3.6	25.7
सितम्बर SEP	I	11.5	0.0	1.6	0.5	0.0	0.0	0	0	29	1	6	7	16	24	11	11	12	8	4	7	1	5	7	10	15	0	3	4	8	0	0.0	0.1	0.5	2.5	26.9
	II							0	0	30	0	15	16	15	9	3	4	18	12	3	8	1	5	6	10	13	1	2	4	10	0	0.0	0.1	0.2	3.3	26.4
अक्टूबर OCT	I	4.0	0.0	1.0	0.3	0.0	0.0	0	0	30	1	4	5	10	20	19	21	9	5	2	20	1	3	3	4	24	0	1	1	3	0	0.0	0.1	0.3	0.9	29.7
	II							0	0	29	2	16	15	12	3	3	5	27	11	10	21	1	3	2	4	25	0	1	1	4	0	0.0	0.0	0.3	0.7	30.0
नवम्बर NOV	I	0.5	0.0	0.0	0.1	0.0	0.0	0	0	28	1	1	3	6	43	21	19	8	3	3	24	0	2	2	2	29	0	0	0	1	0	0.0	0.0	0.3	1.1	28.6
	II							0	0	28	2	25	11	5	1	2	7	21	15	11	25	0	1	2	2	29	0	0	1	1	0	0.0	0.0	0.2	0.4	29.4
दिसम्बर DEC	I	0.7	0.0	0.0	0.3	0.0	0.0	0	0	30	1	2	2	5	21	23	41	5	5	1	24	0	2	3	2	30	0	0	0	1	0	0.1	0.1	0.7	1.5	29.5
	II							0	0	29	2	19	9	2	1	2	5	46	18	7	25	0	2	2	2	29	0	0	1	1	0	0.0	0.0	0.1	0.5	30.4
कुल योग ANNUAL TOTAL	I	67.1	0.1	15.9	1.1	0.3	0.0	0	0	356	9	4	5	10	16	15	24	12	8	3	204	3	41	40	71	282	0	2	18	50	1	0.0	1.5	3.1	27.6	330.0
औसत ON MEAN	II							0	0	358	9	13	13	11	5	1	8	30	15	4	215	3	32	42	73	274	1	8	22	53	1	0.0	1.2	2.1	19.5	340.8
वर्षों की संख्या NUMBER OF YEARS	I			16					24						23								26						28						28		
	II								24						23								27						27						27		

LOT-IA PROJECTS
FLUE GAS DESULPHURISATION (FGD) SYSTEM PACKAGE

TECHNICAL SPECIFICATION
SECTION-VI PART-A
BID DOC. NO.:CS-0011-109(1A)-2

SUB SECTION-II-A8
PROJECT INFORMATION
NABINAGAR STPP-I
(3X660MW)

PAGE - 23 - OF 31

NABINAGAR POWER GENERATING CO. PVT. LTD. NPGC

Bharat Heavy Electricals Ltd. Power Sector Marketing New Delhi-110049

CLAUSE NO.	PROJECT INFORMATION

TABLE – 1

COAL CHARACTERISTICS

Sl. No.	Description	Symbol	Design Coal	Worst Coal	Best Coal	Range of Adequacy Coal
1	2	3	4	5	6	7
A.	PROXIMATE ANALYSIS (As received basis)					
1.	Total Moisture	%	15.00	17.00	12.00	11.00-17 00
2.	Ash	%	45.00	48.00	38.00	36 00-49 00
3.	Volatile matter	%	18.00	17.00	22.00	23.00-17 00
4.	Fixed carbon	%	22 00	18.00	28.00	30 00-17 00
B.	ULTIMATE ANALYSIS (As received basis)					
1.	Carbon	C%	29.80	25.40	39 00	41.20-24.90
2.	Hydrogen	H2%	3.00	2.80	3.20	3.30-2 60
3.	Nitrogen	N2%	0.8	0.70	1 00	1 30-0.50
4.	Oxygen (By difference)	O2%	5.4	5.10	5.70	6.00-5.00
5.	Sulphur	S%	0.3	0.50	0.20	0.20-0.60
6.	Carbonates	CO3%	0.50	0 40	0.60	0.70-0.30
7	Phosphorous	P2%	0.2	0 10	0.30	0.30-0.10
8.	Total Moisture	H2O%	15.00	17.00	12.00	11.00-17.00
9.	Ash	%	45.00	48 00	38.00	36.00-49 00
10.	Gross Calorific Value	KCal/Kg	3200	2800	4000	4200 - 2700
11	Hard grove index		55	50	60	65-45
12	YGP Index		70	80	60	85-55
C.	ASH ANALYSIS					
1.	Silica	(SiO2)%	58.65	59.00	58.20	56 9-59.20
2.	Alumina	(Al2O3)%	28.80	28.00	29.50	27.70-30.00
3.	Iron Oxide	(Fe2O3)%	5.50	6.00	4.70	4.50-6.50

CLAUSE NO.	PROJECT INFORMATION						
	Sl. No.	Description	Symbol	Design Coal	Worst Coal	Best Coal	Range of Adequacy Coal
	1	2	3	4	5	6	7
	4.	Titania	(TiO2)%	1.80	2.00	1.70	1.50-2.10
	5.	Phosphoric Anhydride	(P2O5)%	0.70	0.60	0.90	0.40-0.95
	6	Lime	(CaO)%	1 50	1.20	1.90	1 00-2.10
	7.	Magnesia	(MgO)%	1.30	1.50	1.20	1.50-2 10
	8.	Sulphuric Anhydride	(SO3)%	0.50	0 60	0.40	0.40-0 62
	9.	Sodium Oxide	(Na2O)%	0.10	0 08	0.30	0.35-0.08
	10	Balance Alkalies (By Difference)	%	1.15	1.02	1 2	1.20-0.90
	D.	ASH FUSION RANGE (Under reducing atmosphere)					
	a)	Initial Deformation Temperature (IDT)	°C	1100	1100	1100	1150 1100
	b)	Hemispherical temperature	°C	1300	1250	1350	1400-1250
	c)	Flow temperature	°C	1400	1400	1400	1400-1400

NABINAGAR POWER GENERATING CO. PVT. LTD. NPGC

Bharat Heavy Electricals Ltd. Power Sector Marketing New Delhi - 110049

CLAUSE NO.	PROJECT INFORMATION

TABLE – 2A

FUEL OIL CHARACTERISTICS

Sl. No.	Characteristics	Heavy Furnace Oil grade HV (HFO) IS-1593-1982	Low Sulphur Heavy Stock (LSHS) IS-11489-1985	Heavy Petroleum stock (HPS) IS-11489-1985
1.	Total sulphur content	4.5% Max.	1.0% Max	4.5% Max.
2	Gross calorific value (KCal/kg)	of the order of 10,000	of the order of 10,000	of the order of 10,000
3.	Flash Point (Min)	66 deg C	76 deg C	66 deg C
4.	Water content by volume (Max)	1.0%	1.0%	1.0%
5.	Sediment by weight (Max)	0.25%	0.25%	0.25%
6.	Asphaltene content by weight (Max.)	2.5%	2.5%	2.5%
7.	Kinematic viscosity in Centistokes	370 at 50deg C	100 at 100deg C	100 at 100deg C
8.	Ash Content by weight (Max.)	0.1%	0.1%	0.1%
9.	Acidity (inorganic)	Nil	Nil	Nil
10.	Pour Point (Max.)	57 deg C	66 deg C	72 deg C
11.	Sodium content	—	—	100 ppm
12.	Vanadium content	25 ppm	25ppm	25 ppm
13	Specific heat below pour point (KCal/Kg °C)		0.65	

Bharat Heavy Electricals Ltd. Power Sector Marketing New Delhi - 110049

CLAUSE NO.	PROJECT INFORMATION

TABLE – 2B

LIGHT DIESEL OIL CHARACTERISTICS

AS PER IS 1460-2000

Characteristics		LDO
1.	Pour Point (max)	21 deg.C & 12°C for Summer and Winter respectively
2.	Kinematic viscosity in centistokes at 40 deg.C	2.5 to 15.7
3.	Sediment percent by mass (max)	0.10
4	Total sulphur percent by mass (max)	1.8
5.	Ash percentage by mass (max)	0.02
6.	Carbon residue (Rans bottom) percent by pass (max.)	1.50
7.	Acidity in organic	Nil
8.	Flash point(Min.) - Pensky Martens	66 deg.C
9.	Copper strip corrosion for 3 hours at 100°C	Not worse than No. 2
10.	Water content, % by volume(max)	0.25
11	GCV (Kcal/kg)	10,000

NABINAGAR POWER GENERATING CO. PVT. LTD. NPGC

Bharat Heavy Electricals Ltd. Power Sector Marketing

CLAUSE NO.	PROJECT INFORMATION

Table-3

S.No	Constituent	As	mg/l (except pH & turbidity)
1.	Calcium	$CaCO_3$	131
2.	Magnesium	$CaCO_3$	52
3.	Sodium + Potassium	$CaCO_3$	65
4.	Total Cations	$CaCO_3$	248
5.	Chloride	$CaCO_3$	20
6.	Sulphate	$CaCO_3$	93
7.	Nitrate	$CaCO_3$	10
8.	Alkalinity	$CaCO_3$	125
9.	Total Anions	$CaCO_3$	248
10.	Iron(total)	Fe	0.3
11.	Total Silica	SiO_2	22
12.	pH value	---	7.0-8.2
13.	Turbidity	NTU	10

Note: Clarified water is used for CW system as make up & the CW system is expected to operate at about 5.0 – 5.5 Cycles of Concentration (COC) with suitable chemical treatment program using acid, scale & corrosion inhibitor dozing. As CW blow down water is tapped from CW system, the water quality of CW blow down shall accordingly be arrived by the bidder.

Table-4

ANALYSIS OF DM WATER TO BE USED FOR MAKE-UP WATER TO CONDENSER

Sl.No.	Characteristics	Value
1.	Silica (Max.)	0.02 ppm as Sio2
2.	Iron as Fe	Nil
3.	Total hardness	Nil
4.	pH value	6.8 -7.2
5.	Conductivity	Not more than 0.1 micro mhos/cm excluding the effects of free CO2

CLAUSE NO.	PROJECT INFORMATION

Table-5

9.00.00 STEAM GENERATOR DATA

1.	Location	Outdoor
2	Operation	Base load
3.	Type	Pulverised coal fired
4.	Maximum Continuous Rating	2120 Tons/hr.
5.	Steam pressure at SH outlet	255 Kg/cm² (a)
6.	Steam temperature at SH outlet	568°C
7.	Oil for start-up and flame stabilisation	HFO/LSHS/HPS/LDO
8.	Fuel oil system sizing	30% of Boiler MCR for Heavy oil/ LSHS/HPS (7.5% BMCR for LDO)
9.	Pulverised coal size	Minimum 70% through 200 Mesh and 99% thru 50 mesh
10.	Type of pulveriser	Vertical spindle mills
11.	Type of oil burners	Steam atomised, (Air atomised for LDO)
12.	No. of air heaters	Two Bisector(2) for the secondary air side & Two Bisector(2) for the primary air side
13.	No of ID Fans	Two (both working)

10.00.00 ESP DATA

1	Location:	Downstream side of Air preheaters
2.	Operation:	Base load
3.	Type:	Rigid Discharge frame
4.	Rapping	Intermittent

Bharat Heavy Electricals Ltd. Power Sector Marketing New Delhi-110049

NABINAGAR POWER GENERATING CO. PVT. LTD. NPGC

CLAUSE NO.	PROJECT INFORMATION

Table-6

List of Drawings placed below in this sub section:

Sl.No.	Drawing Description	Drawing No.
1.	General Layout Plan	Enclosed
2.	Equipment Layout Plan	Enclosed
3.	ID system-Elevation & Plan	Enclosed
4.	Pipe Cable Trestle Layout	Enclosed
5.	Pipe Cable Trestle Foundation	Enclosed
6.	Chimney foundation details	

	Chimney shell outer diameter at ground level (m)	Chimney foundation outer diameter (m)	Type of foundation	Level of Top of foundation (m)	Level of Bottom of foundation (m)
Unit #1	32	46.7	Raft supported on piles	RL(+) 120.20	RL(+) 115.95
Unit #2&3	34.5	51.22	Raft supported on piles	RL(+) 120.20	RL(+) 115.70

Bharat Heavy Electricals Ltd. Power Sector Marketing New Delhi - 110049

	TITLE: 3x660 MW NABINAGAR STPP TECHNICAL SPECIFICATION FOR AGITATORS	SPECIFICATION No: PE-TS-457-571-18000-A001	
		SECTION-I, SUB-SECTION-C1	
		REV. 01	DATE: SEP. 2020
		SHEET : 1 OF 1	

SPECIFIC TECHNICAL REQUIREMENT – MECHANICAL

1.0. APPLICABLE CODES & REGULATIONS

The design and materials shall conform to the requirements of applicable codes and regulations of the latest edition. The design, manufacture, installation and testing of the Agitator shall follow the latest applicable Indian/International (AISI / ASME/EN/Japanese) Standards.

Bidder shall supply the equipment in accordance with relevant regulations, codes and standards specified in the specification. If required by relevant regulations, codes and standards specified in the specification, Successful Bidder shall assist BHEL to obtain approval against the equipment, documents and drawings by Indian authorities.

2.0. PROVENNESS CRITERIA/Pre-QUALIFICAITON REQUIREMENT

The Bidders are required to meet the Qualification Requirement (PQR) for Agitators as per Provenness Criteria & shall submit the credentials as called in the tender document. Bidder shall submit the Annexure to qualification requirement (Attachment-3k). Only OEMs qualifying as per the Qualification requirement shall be considered for placement of order.

3.0. TECHNICAL INFROMATION

3.1 AGITATOR DETAILS:

For agitators refer "Agitator Schedule" in Section-II, Annexure-8 of the specification.

3.2 MATERIAL OF CONSTRUCTION

Sl. No.	Material of construction	Horizontal agitators (side entry)	Vertical Agitators (Top entry)
i.	Impeller blade	Alloy 926 or better material	Alloy 926 or better material
ii.	Impeller Hub	Alloy 926 or better material	Alloy 926 or better material (or) Carbon steel with 6mm thick Bromo/Chloro Butyl Rubber Lining (as per Proven practice)
iii.	Shaft	Alloy 926 or better material	CS with Rubber Lining (min 6 mm thk Chloro/bromo butyl Rubber)
iv.	Fasteners in wetted parts	Alloy 926 or better material	Alloy 926 or better material
v.	Fasteners in Non Wetted	GI fastener (40 µ plated) / SS	GI fastener (40 µ plated) / SS
vi.	Mounting base	Alloy 926/SMO254 (Wetted parts)	Carbon Steel
vii.	Tank Nozzle (for inserting agitator) with Flange	Not applicable (in BHEL scope)	Not applicable (in BHEL scope)
viii.	Flush pipe for Start up with flange	FRP or Alloy 926 or Alloy 59 (Material has to be selected based on flush velocity)	Not applicable
ix.	Tank nozzle with flange (for Flush Pipe)	(i)For absorber agitator Carbon Steel with 2mm C276 lining inside the pipe and on the flange face (ii)For other tanks -Carbon Steel	Not applicable
x.	Agitator Support Leg	Carbon Steel	Not applicable

3.3 POWER SUPPLY DETAILS:

1.	**POWER SUPPLY**	
	The following voltage levels shall apply:	
	3 phase, 6.6 kV AC ,50 Hz	Voltage for motors rated 175 kW and upto 1500 kW and for power distribution within the plant.
	3 phase, 415 V, AC , 50 Hz	Standard voltage for power supplies to electric power consumers and motors Above 0.2 KW and upto 175 kW.
	1 phase 240V AC / 3 phase 415 V AC, 50 Hz	Standard voltage for power supplies to electric power consumers and motors Upto 0.2 kW.
	1. All equipments at 415V voltage level shall be suitable for voltage variation of ±10% and rated frequency of 50 Hz with a variation of + 3% to -5%, and 10 % (absolute sum) combined variation of voltage and frequency unless specifically brought out in the specification. 2. Bidder shall design and supply the equipment suitable for satisfactory operation under above mentioned power supply condition. 3. For further details refer electrical specification under Section-I, Sub-Section-C3.	

3.4 AGITATOR ARRANGEMENT

For arrangement of Agitators please refer "SIZING CALCULATION, SELECTION PARAMETER FOR ALL TANKS" under Annexure-III, Sub-Section-D, Section-I.
Auxiliary Absorber Tank Agitators will operate continuously when Limestone / Gypsum Slurry is evacuated from Absorber for any Absorber maintenance work. Other Slurry Tanks and sumps Agitators will operate continuously for FGD system operation.

4 SCOPE OF SUPPLY & SERVICES

The bidder shall assume sole responsibility for the design, fabrication, testing, surface preparation & painting, packing, transportation and performance of the specified equipment with accessories, and shall ensure that the equipment with accessories are in conformance with this specification, as well as other documents which form part of the Purchase Order/Contract.

Various inspections by the BHEL/NTPC shall not relieve the Bidder in any way of his obligation to maintain an adequate test, inspection, and documentation program of his own, and shall not relieve the Bidder of any other obligation under this specification. Furthermore, any inadvertent overlook of deviations from some requirements of this specification by the buyer shall not constitute a waiver of these requirements, or of the Bidder's obligation to correct the condition when it is discovered, or of any other obligation under this specification.

This specification only states the lowest technical requirement, neither specifying all technical details, nor referring the pertaining code and standard fully. It is the Bidder's responsibility to ensure that the complete delivery complies with all relevant codes, standards and specifications.

The Bidder is obliged to supply relevant drawings and documentation to the buyer. All to be in English language and metric system, if not otherwise agreed in writing.

Scope for the bidders shall include Design, Manufacturing, Supply, and Supervision of Erection & Commissioning

Design: Broadly includes basic engineering, detail engineering, preparation and submission of engineering drawings/calculations/datasheets/quality assurance documents/field quality plans, storage instructions, commissioning procedures, Erection & assembly Drawings, operation & maintenance manuals, performance guarantee test procedures and assisting BHEL in obtaining time bound approval from customer.

Supply: The scope includes the following:

- Includes manufacturing/fabrication, shop floor testing, stage inspections, final inspections, painting & packing.
- Mandatory spares as defined as Section-I, Sub-Section-D, Annexure-II.
- Recommended spare parts list to be furnished (is not part of scope of supply)
- Any special tools & tackles required for the entire equipment to disassemble assemble or maintain the units.
- Start-up & Commissioning Spares
- First fill of consumables

Services: Services to be provided by the bidder:

- Detailed Erection and commissioning procedure shall be submitted by successful bidder for carrying out the erection and commissioning at site by BHEL.
- Supervision for Erection & Commissioning, trial run at site
- Performance guarantee tests at site & handover in flawless condition of the package to the customer
- Training of customer/ client O&M staff covering all aspects of the Agitators - Operation & Maintenance, Trouble-shooting etc. at site
- Training of customer at manufacturer's works (3 persons for 2 days including lodging and boarding)
- Visits shall be planned by BHEL site team and prior intimation shall be sent to supplier for visit to site for supervision services. Bidder shall be informed at least 10 days in advance for the requirement of visit at site. Visiting team shall consist of one or two expert of bidder as deemed necessary by them.
- Bidder shall prepare the model of all Agitators under scope in an integrated & intelligent 3D software solution using rule-based, data centric 3D Design software with equipment drawings, data sheets, BOQ, schematics and logic diagrams etc. in the aforesaid 3D model. After the completion of engineering the corresponding complete 3D review model shall be handed over to BHEL.

The scope of supply for AGITATORS shall include but not limited to the following:

A) <u>For Horizontal (Side Entry) Agitators:</u>

Sl. No	Scope
1.	AGITATOR complete with
	i. AGITATOR Blades
	ii. AGITATOR Shafts
	iii. Coupling arrangement (Flexible)
	iv. Single Mechanical Seals
	v. Shaft Sleeve
	vi. Lanterns/ Stools (Bearing Housing), Safety Guard

Sl. No	Scope	
	vii.	Bearings
	viii.	Agitator Mounting Flanges with gaskets and fasteners
	ix.	Drive Motor(IE3) with gearbox arrangement
	x.	Supporting arrangement including tie rods, gusset plates etc. of Side Entry Agitator on the tank Wall. Vessel Nozzle and mating flange for supporting on the tank wall, gaskets and fasteners.
	xi.	VOID.
	xii.	Foundation plate with foundation bolts, vessel nozzle
	xiii.	Painting and Rust Prevention during shipment and construction
	xiv.	Packing and transportation
	xv.	Supervision of Erection & commissioning at site
	xvi.	Special tools & tackles as applicable
	xvii.	Start-up spares, Spare parts for commissioning & erection, Mandatory Spares: As per Project Specific Requirement
	xviii.	Installation, operation and maintenance manuals
	xix.	Any other items required for completeness of the equipment except the items covered in the exclusions.

B) <u>For Vertical (Top Entry) Agitators:</u>

Sl. No	Scope	
1.	AGITATOR complete with	
	i.	AGITATOR Blades
	ii.	AGITATOR Shafts
	iii.	Coupling arrangement (Flexible)
	iv.	Gland Packing, Seals, O Rings, Glands
	v.	Shaft Sleeve
	vi.	Lanterns/ Stools (Bearing Housing), Safety Guard
	vii.	Bearings
	viii.	AGITATOR Mounting Flanges with gaskets and fasteners
	ix.	Drive Motor(IE3) with gearbox arrangement
	x.	Mating Flange for Supporting on Slurry Tank Roof
	xi.	Shims
	xii.	Painting and Rust Prevention during shipment and construction
	xiii.	Packing and transportation
	xiv.	Supervision of Erection & commissioning at site
	xv.	Special tools & tackles as applicable
	xvi.	Start-up spares, Spare parts for commissioning & erection, Mandatory Spares: As per Project Specific Requirement
	xvii.	Installation, operation and maintenance manuals
	xviii.	Any other items required for completeness of the equipment except the items covered in the exclusions.

The quantity, location of the agitators has been included in the agitator schedule (Section-II, Annexure-8).

4.1	TECHNICAL REQUIREMENTS
I	Agitators shall be supplied in tanks and vessels to prevent caking and settlement of particles

	out of the slurry, e.g. in the limestone slurry tank, Auxiliary Absorbent tank, and sumps etc.
II	All agitators shall be designed for continuous operation unless otherwise specified. The design of the agitators shall be of proven type. BHEL, during detail engineering reserves the right to ask for CFD (Computational Fluid Dynamics) analysis to accurately determine equipment requirements. Successful Bidder shall provide the same without any additional price implication.
III	Standard type agitators with suitable characteristics shall be used wherever practical. The agitators shall be complete with motor, gearbox, agitator shaft, coupling, safety guards, mechanical seal (for side entry agitators), impeller, support legs, agitator mounting flange including bolts nuts and gasket etc.
IV	All agitator parts and accessories in contact with the stirred fluid shall be constructed of materials specifically designed for the conditions and nature of the stirred fluid and be resistant to erosion and corrosion.
V	The material for the shaft (which is continuously in contact with slurry) and agitator blades of the Auxiliary Absorbent Tank Agitators shall be made with Alloy 926 or better material. For Agitators in other tanks, agitator blades shall be made with Alloy 926 or better material and shaft can be rubber lined (minimum 6 mm thick Chlorobutyl Rubber). This does not release the bidder of the responsibility for selecting the correct materials.
VI	Each agitator and its associated equipment shall be arranged in such a manner as to permit easy access for operation, maintenance and agitator removal without interrupting plant operation. It shall be possible to remove the sealing devices of the side mounted agitators without having to drain completely the slurry inside the tank.
VII	-VOID-
VIII	Lifting lugs and eyes and other special tackle shall be provided as necessary to permit easy handling of the agitators and their components.
IX	Static and dynamic (as far as applicable) balancing of all agitators shall be carried out after assembly.
X	All agitator parts and components shall be designed and calculated for fatigue life, considering maximum bending loads, induced by fluctuating hydraulic forces and torsional loads, based on the installed motor power. For side entry agitators the alternating bending moment resulting from impeller and shaft weight has to be considered additionally.
XI	All exposed moving parts shall be covered by guards.
XII	The shape of the impeller blades of side entry agitator's/top entry agitators shall be designed to avoid wear on the impellers which will affect the agitator performance as specified for a minimum period of 2 years of continuous operation under design conditions for the range of slurry specified in the specification. In order to avoid excessive wear impeller tip speeds must not exceed 12 m/s.
XIII	Belt drives (if applied for side entry agitators) shall be properly designed to provide a minimum lifetime of 2 years under design conditions
XIV	It shall be noted that all Agitators are meant for keeping the solid particles in suspended mode in liquid with "Full Off-Bottom Suspension" of solid particles to 98% of liquid column to virtually "Uniform Solid Concentration". No chemical reaction will take place.
XV	Maintaining a uniform concentration over the 95% of liquid column. Absolute sweeping of solid particle from tank bottom is a must for all Agitators. If speed is required to be increased to guarantee the above requirements; the same can be increased by vendor. Bidder's machines that consume less power will be in an advantageous position.
XVI	It is to be noted that in continuous process any deposit at tank bottom is the loss of material which are not getting converted as per process. Hence, total loss of material by sedimentation is a loss to FGD Process & determines the "In efficiency of the Agitator".
XVII	Vendor should ensure nil settlement; utilization of solid material shall be a guaranteed parameter and will be assessed in percentage (%) term to net wet of solid mass of inflow or

	out flow. This is one of the guarantee parameter.
XVIII	Agitator and its driver shall perform on the test stand at shop and on the Agitator's permanent location at site within vibration limit. The vibration of combined unit will be the responsibility of Agitator manufacturer. Agitator manufacturer is to ensure that Site performance of vibration is one of the "Acceptance Criteria" of the equipment. Please note that vibration at test stand can only be taken as "for information".
XIX	Every Tank will have a pump whose suction line shall be connected to tank. These pumps are to operate continuously at the lowest operating level which is decided by Process requirement. Hence, the minimum operating level of liquid in every tank for every Agitator is a must to assess the combined operation of Agitator as well as that of pump alone. The Tank water level is indicated in "SECTION-II Annexure-8".
XX	Agitator must have low-pitch propeller with low solidity ratio and Power Number of 0.3-0.35. The Maximum Input Power at motor terminal shall be considered as a guaranteed parameter under "Schedule of Guaranteed Parameters" in "SECTION-II Annexure-10-Schedule of Guarantees"- and the same shall be calculated for maximum liquid level in tank. A calculation of power specifying the hydraulic power of Agitator, Seal loss, Gear box and Motor internal loss must be submitted along with the offer. A characteristics curve showing power versus liquid level should be submitted from the lowest liquid level, required for Agitator to maximum liquid level in the tank. Motor should be selected based on the highest power demand with a 10%margin at maximum liquid level, taking into account frequency variation.
XXI	The agitator shall be suitably designed for mounting and operation in purchaser's tank whose details are given under **sizing calculation of tanks**, annexed with the enquiry specification (SECTION-I, SUB-SECTION-D, Annexure-III). The bidder shall review and seek clarifications, if any on Tank sizing document.
XXII	In case Bidder provides a Vertical Agitator with hub design, the same has to be of Alloy 926 or better material. Impeller hub material has to be Alloy 926 or better material.
XXIII	Unless otherwise specified, for small diameter impeller, it shall be possible to remove complete agitator assembly without dismantling through the opening provided on the tank/sump, and for large diameter impeller, the blade shall be of removable construction for ease of removal. Bidder shall also provide the headroom required for taking out the agitator as above.
XXIV	Any instruments provided shall be Profibus Compatible.
XXV	Bidder shall provide the design and arrangement of baffle plates in circular tanks. Baffle plates are in BHEL scope.
XXVI	Bidder shall provide proper dowelling between motor and base plate, gear box and mounting tool/base plate, for ease of assembly of agitator unit. Tapered dowell shall be provided.
XXVII	Vendor shall provide suitable arrangement for supporting the agitator shaft with impellers during removal of gear-box for maintenance and details of such arrangements shall be furnished.
4.2	**CONSTRUCTIONAL FEATURES**
A)	**BLADE AND HUB OF PROPELLER**
I)	The blades of the agitators shall be of Alloy 926 or better material.
II)	The Blade design of the Agitator to be of most efficient design in order to offer least power consumption. The Agitator power consumption is part of the guarantee parameters.
III)	Although Agitator will have substantial low speed because of reduction Gear Box, hydraulic unbalance at impeller can cause severe vibration, hence it is mandatory that rotating assembly shall be dynamically balanced to its rated speed.
IV)	Impeller should be dynamically balanced to Gr: G16: ISO-1940 after rubber lining of shaft.
B)	**SEAL**

1	**Horizontal / Side Entry Agitators:**
I.	Agitators should be provided with Single Stage mechanical seal. The mechanical seal should be as per ISO-21049 / API 682.
II.	The Mechanical Seals shall be so arranged that repacking or fitting of replacement seals can be carried out with the minimum of disruption to plant operation.
III.	Design the mechanical seals chamber to have sufficient room to lubricate and get seal face cool with its own slurry.
IV.	-VOID-
V.	All mechanical seals, regardless of type or arrangement, shall be of the cartridge design. Hook sleeve cartridge should not be used.
VI.	-VOID-
VII.	Requirement of flushing water, its quantity, and pressure to be indicated in data sheet.
VIII.	Zero leakage is the intension of this specification. However, quantity of leakage, if it is unavoidable, it should have a provision of collecting / or discharging back to the tank.
IX.	Mechanical seals shall be fitted and installed in the Agitator before shipment and shall be clean. Mechanical seals shall be plugged with screw for shipping.
X	Intention of the specification is not to specify Type of Seal, Seal design, Spring configuration, Seal configuration, Balanced or Unbalance type etc. Agitator manufacturer to decide the same along with seal manufacturer, the best seal that is suitable for the offered Agitator
XI	Seal life has to be guaranteed, taking into consideration all its components **for 25000 hrs.** If the seals fail before the completion of guaranteed period, the same should be replaced free of cost by the bidder.
XII	The sub-vendor of the seal shall be approved by customer during contract execution.
2	**Vertical Agitators for Other Slurry Tanks & Drain Pit Tanks**
I	Agitator shall be supplied with stuffing box or any proven equivalent or superior sealing type. Construction of Gland Packing shaft seal system shall be as per the below fig: 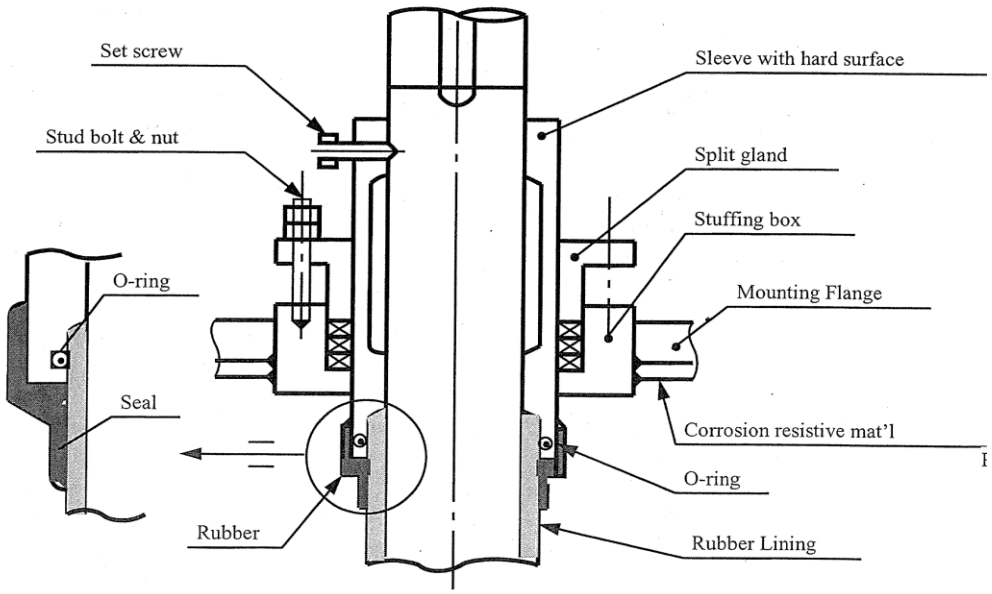
II	Agitator shall be supplied with stuffing box or any proven equivalent or superior sealing type. Mechanical and hydraulic conditions in the seal chamber, required to maintain a stable film at seal face, including temperature, pressure and flow, shall be jointly established by Agitator manufacturer and seal manufacturer, and shall be noted in data

	sheet submitted in tender. If mechanical seal is offered by bidder, the mechanical seal should be as per ISO-21049 / API 682.
C)	**SHAFT**
I.	MOC of Shaft shall be as per Clause no.3.2 & "Agitator Schedule", Section-II, Annexure-8. Use of dissimilar material at flange joint shall be avoided to eliminate any crevice corrosion. Spacing of the shaft joint should not be more than 3.0 m for easy assembly if it is more than 40kg. If welding is used for joining two tubes, welding joint must be 100% radio graphed. If split shaft is proposed for larger tanks , shaft flange at the joining interface has to be rubber lined at manufacturer's works and necessary fasteners have to be provided.
D)	**BEARING & BEARING HOUSING IN GEAR BOX**
I	Bearing shall be of rolling type radial and thrust bearing (FAG/SKF/Timken make only) as required. Thrust bearing shall be sized for continuous operation under all specified condition.
II	Thrust bearing shall provide full load capability if the Agitator's normal direction of rotation is reversed. Up-thrust and Down-thrust load must be taken into account in sizing bearing. Life of the every anti-friction bearing, used in the bearing housing as per manufacturer's design, should have **L10 of 25000 hr (minimum).**
III	Bearing housing should be grease/oil lubricated. If bearing is oil lubricated, constant–level sight-feed oiler of 100cc size or bigger capacity is to be provided. Bearing housing should have oil drain, constant oil level indicator. A provision of one (1) number G1/2" thread (ISO-228, Part-1)port is required for remote control of temperature of bearing housing oil bath through RTD.
IV	If bearing housing requires cooling water, volume and pressure of cooling water is to be indicated in Technical Data Sheet.
V	Lubricating oil will be the responsibility of Gear Box manufacturer. Hence, manufacturer has to make arrangement of first fill of oil at installation and at commissioning stage. Quantity of oil and its grade is to be indicated in Drawing and Operation Manual.
E)	**MATERIALS**
I	Agitator components designated as "Full Compliance Material" shall meet the requirements of the industry specification as listed for the material in the table as well as in the specification in the respective section.
II	A detail quality plan is to be submitted along with offer for all items marked "Full Compliance Material".
III	Final acceptance of the quality plan will be approved by ultimate user, it is expected that manufacturer to submit quality plan (QAP) along with the offer. The same shall be followed at post order stage also. QAP should be as per the best practice followed internationally to avoid any conflict of interest.
F)	**DRIVER (MOTOR)**
I	Driver shall be sized to meet all specified operating conditions including bearing housing , seal, external gear box and coupling loss(if any).
II	Motor shall be able to accelerate to speed at reduced voltage and frequency as specified in "Site Power Supply Condition" as per Clause: 3.3.
III	It should meet the electrical specification (SECTION-I, SUBSECTION-C3).
G)	**GEAR BOX**
I.	Gear box should be vertical flange mounted solid shaft type (Vertical Agitators), reducing speed type, specially designed for the requirement of Slurry mixing and to be manufactured by the Agitator supplier. Complete up-thrust and down-thrust, developed by Agitator shall be taken by thrust bearing housing of Gear Box. An auxiliary slow drive provision shall be provided in the Gear Box so that slurry is

	always kept in dynamic condition to avoid settling of slurry at bottom, in the event of Agitator is not operating at its rated speed. Rating of Gear box shall be at least 1.5 times the rated torque of Agitator.
II.	The reduction unit shall be procured from a reputed manufacturer and shall confirm to BS: 721 (latest edition)/AGMA/Equivalent specifications. The sub-vendor of the gear-box shall be approved by customer during contract execution.
III.	Gear drives shall have splash type oil lubrication. If oil pumps are used, they shall be removable for maintenance without disturbing the motor or drive housing.
IV.	The gear reduction unit shall always be provided with an oil drain, a breather and oil level gauge. The lubrication to be designed keeping in view that the temperature within the bearing should not exceed 85 Deg. C.
V.	-VOID-
VI.	The bidder shall provide an easily accessible oil level gauge and a dipstick that will indicate oil level under standstill and operating conditions.
H)	**COUPLING & COUPLING GUARD**
I.	Coupling and coupling guard should be supplied between driver and driven equipment.
II.	Coupling should be designed taking into consideration adequate service factor.
III.	Design rating of the coupling (excluding service factor) should be indicated in data sheet.
IV.	Coupling must be having locking screw so that it does not slide over shaft in due course operation.
V.	Vertical Agitators - Coupling between Motor and Gear Box shall be Spacer-type flexible coupling, made of Cast Iron. Spacer shall be of sufficient length so than Motor and Gear Box shall be able to run independently at no-load condition by detaching the respective coupling.
VI.	It is desirable that for servicing of seal, coupling half should not be removed. Coupling should be dynamically balanced to Gr: G6.3, ISO-1940.
VII.	Removable coupling guard shall conform to the requirements of all applicable national, industrial or statutory regulations.
I)	**PLATE AND FASTENING BOLTS**
I.	Base plate shall be interpreted as the component of Agitator assembly through which the whole load will be transmitted to the Sole Plate/Nozzle over which the equipment will be mounted. The Base plate shall be fabricated with mild steel of structural quality (UTS=42N/sq mm minimum) with anti-corrosive paint of sufficient dry-film thickness.
II.	Base plate must have provision of leveling on its intended mounting place. Nozzle is not in the scope of supply of Agitator manufacturer. It should be noted that Nozzle will be rubber lined to prevent any leakage of corrosive gases
III.	Alignment between Gear Head Shaft and Agitator shaft shall be within the permissible limit of Gear Box. Similarly, misalignment between Motor shaft and Gear Box Shaft shall be within 0.050 micron (radial) and 2 degree (angular) or better as per requirement of Motor and Gear Box
IV.	Base plate with desired number of hole shall be provided by the bidder, will be machined on one side. Base Plate shall be welded to the structure after leveling, as recommended by Agitator manufacturer and rubber lining is completed before placing the equipment in its desired location.
J)	**OTHER COMPONENTS**

I	All fasteners used in wetted condition must be of Alloy 926 or better material so that even if it comes in contact with liquid by swelling of rubber, thread remains unaffected. Raw material of fastener must undergo Inter-granular Corrosion test as per ISO-3651, Part-1 for Nitric Acid test.
II	Mounting flange dimensions shall be as per ASME B16.5 up to 600 Nb, ASME B 16.47 for more than 600 NB.
III	Rubber Lining (As Applicable) a) Rubber lined surfaces shall utilize 6 mm nominal thickness chlorobutyl rubber. b) Areas of high wear (e.g. leading edges on impeller blades) shall have an additional 6 mm of rubber for abrasion protection. c) No field-applied linings are permitted except for file patch kits.
K)	**GENERAL REQUIREMENT OF SIDE ENTRY AGITATORS:**
I.	All Agitators shall be designed for continuous operation.
II.	The Material of Construction (MOC) of Agitators shall be Alloy 926 or better material as per Cl. No. 3.2 & "Agitator Schedule" ", Section-II, Annexure-8.
III.	It should be of Flange mounted type.
IV.	Nozzle size, on which Agitator shall be mounted, shall have enough opening to Insert rotating assembly from side. Bidder shall inform the required nozzle size. Further the mating flange shall be in the scope of the bidder.
V.	The Bidder to consider Gypsum Sedimentation during stoppage of Agitator.
VI.	The following information to be provided along with the bid: a) Impeller Diameter b) Impeller Speed c) Agitator Pumping Capacity (m^3/min) d) Volume per Agitator:
L)	**GENERAL REQUIREMENT OF TOP ENTRY AGITATORS IN OTHER SLURRY TANKS & DRAIN PITS:**
I.	All Agitators shall be designed for continuous operation.
II.	The Material of Construction (MOC) of Agitators: Agitator blades shall be made with Alloy 926 or better material & Agitator shaft can be rubber lined as per Clause No.3.2 & "Agitator Schedule" , Section-II, Annexure-8.
III.	It should be roof mounted.
IV.	Agitators shall be vertical mounted type and shall be driven by motor with reducing speed gear box of rigid type, solid shaft coupling between gear box and agitator and flexible coupling of spacer type between Motor and Gear Box. Both Gear Box and Motor should be vertically/horizontally flange mounted type with a common frame of the whole equipment. The entire thrust load of agitator should be transmitted to the thrust bearing of Gear box.
V.	Nozzle size, on which Agitator shall be mounted, shall have enough opening to Insert rotating assembly from top. Bidder shall inform the required nozzle size. Further the mating flange shall be in the scope of the bidder.
VI.	Cable entry to the Motor terminal box should preferably be from top when motor is vertically mounted at its position and it should be easily accessible.
VII.	Impeller should be dynamically balanced to Gr: G16: ISO-1940 after rubber lining of shaft.
VIII	In case Bidder provides a Vertical Agitator with hub design the same has to be of Alloy 926 or better material
IX	Operation speed of the Agitator motor shall be at least 25% below the first critical speed.
X	-VOID-
XI	-VOID-
4.3	**MOTOR**

	All AC motor shall be Squirrel cage induction motor and, shall be suitable for direct –on-line starting. Rating of the motor should of Type S1 (Continuously rated) as per ISO-60034, Part-1. Rating of motor must be selected with minimum margin (as per the below table) above the maximum load demand of the driven equipment under entire operating range including voltage and frequency variation: Agitator Rated BKW — Motor Margin <22KW — 125% of Agitator Rated BKW 22KW-55KW — 115% of Agitator Rated BKW >55KW — 110% of Agitator Rated BKW
	It should meet the electrical specification (SECTION-I, SUBSECTION-C3).
5	**GENERAL REQUIREMENTS**
1	Metric unit shall be used in the drawings and in the any displays on the equipment's. Special attention should be taken that the unit of pressure shall be in dual scales of kPa and kg/cm2(G). For instance the pressure gauges should have dual unit's indication.
2	Descriptions in the drawings, in the documents, and in the displays shall be in English
3	All rotating parts such as coupling shall be covered with suitable protective guards. Guards shall be easily removable type.
4	The equipment shall be designed to withstand the corrosive and moist environment in which these are proposed to operate.
5	Noise level produced by any rotating equipment individually or collectively shall not exceed 85 dB measured at a distance of 1.0 meters from the source in any direction and 1.5m above operating floor.
6	The overall vibration level shall be as per ISO 10816.
7	Suitable drain connections shall be provided.
8	The equipment shall be suitable for stable operation continuously.
9	Corrosion allowance: Corrosion allowance for entire equipment shall be in accordance with latest applicable Indian / International standard. Carbon steel shaft shall have a corrosion allowance of 6mm on its diameter. On other non-pressure carbon steel parts a corrosion of 3mm shall be considered on each surface.
10	Unless otherwise specified , flanges shall be in accordance with ANSI B16.5 Class 150
11	Name plate: All equipment shall be provided with nameplates indicating the item number and service name. Name plates shall be of 304 Stainless steel plate and placed at a readily visible location. Nameplate of main equipment shall have enough information, which will be confirmed during engineering phase. Stainless steel nameplates for all instruments and valves shall be provided.
12	Rotation arrows shall be cast in or attached with stainless steel plate on each item of rotation equipment at a readily visible location.
13	Unless otherwise specified, all equipment items where the weight exceeds 15 kg shall be provided with suitable lifting lugs, ears or ring bolts or tapped holes for lifting rings. Minimum shock factor for lifting lugs shall be minimum 2.0. The position of lifting lugs and reference dimension shall be shown on GA and/or outline drawings. NDT shall be conducted for lifting lugs. When any spreader bars are required for lifting and laydown, the bidder shall provide spreader bar with equipment.
14	Skid Mount/Transportation: Equipment shall be fabricated as skid mount design as much as practical to minimize erection at the site.
15	If the driver/driven equipment train is in the resonance condition or any vibration problems occur, the bidder shall solve the problems in a timely manner.
16	Bidder shall provide the necessary gaskets.
17	All the surfaces of the carbon steel should be rust prevented before shipment for the period of at least 12 months for storage and construction.

18	Bidder to provide capacity of hoist required for material handling and the details of heaviest component to be handled. Bidder shall provide a typical arrangement/drawing of the handling arrangement.
19	The list of all Bought out items with makes and country of origin to be mentioned along with offer to be submitted.
20	Cost towards the participation in discussions/meetings, providing technical assistance during technical discussions/meetings with customer for approval of drawing/documents etc. TA/DA, boarding and lodging to attend these meetings shall be borne by the bidder and shall be inclusive in supply portion.
21	Material of construction for all equipment/components shall be subject to customer/ BHEL approval during detail engineering. Accordingly bidder shall consider MOC for all equipment/component (complying tender specifications), as per best engineering practice, global standard and global references, in case no MOC is available in specs.
22	Bidder to provide sub vendor list and Bidder shall strictly adhere to customer approved vendor list (reference list is included in SUB-SECTION-D, Annexure-I). In case bidder proposes an additional vendor for an item or vendor approval is required for any new item, acceptance shall be subject to approval by customer/ BHEL before placing order and bidder shall submit relevant documents to take up with customer for approval. Bidder shall submit relevant documents as per Sub-Supplier Questionnaire provided in referred Annexure .
23	It shall be the complete responsibility of the successful bidder to obtain "Sub Vendor Approval" from BHEL / customer for all equipment's & components. Any delay in sub vendor's approval should not affect the project schedule. If any of the sub vendors does not have the approval of customer/ BHEL, the same may be replaced with another customer/BHEL approved sub-vendor only, without any price implications to BHEL.
24	The modalities of inspection (Stage, Final, In-process) shall be finalized during detail engineering after submission of quality assurance plan (QAP). It shall be reviewed by the end customer and BHEL. Bidder shall follow the procedures of inspection as per the approved QAP. Bidder has to submit the following documents along with inspection call and if any other documents required as per approved QAP. - Raw material inspection certificate - Internal test reports - Statutory certificates as required. - All inspection & testing shall be carried out based on the following documents: a. Relevant Standards b. Specifications c. Approved drawings d. Data Sheets e. Calibration certificate for all the measuring instruments
25	During detail engineering, bidder to strictly adhere to BHEL drawing formats, document numbering, quality plan & FQP formats
26	The identification and numbering of equipment, systems, items, etc. of supply, as well as of all documents and drawings shall be in accordance with reference Designation System for Power Plants - KKS system.
27	Complete detail engineering drawings, calculations, selection of components etc. shall be reviewed & subject to approval of BHEL/end customer during detail engineering
28	Bidder shall furnish necessary inputs & drawings of all equipment in editable Auto CAD/ MS-Word /Excel format.
29	During detail engineering, successful bidder shall ensure flow of drawings/documents as per schedule. Any comments from BHEL/end customer should be addressed timely by the bidder.
30	Bidder to note above mentioned points not exhaustive and any work /items required for

	completing the smooth operation and ensuring satisfactory running of the machines till final hand over to the end user shall also be in the scope of the bidder.
31	Bidder shall provide design support to assist the Purchaser in efficiently integrating the furnished equipment. Design support specifically includes: • Bidder shall verify/ validate the number and location of agitators to keep material in suspension. • Static and dynamic loading information and requirements for agitator support design (applicable for top & side type)
6	**PACKING AND FORWARDING**
1	Proper packing to be ensured. **Indigenous Supply:** Agitator & sub system assembly shall be wrapped in polythene bags & packed in a strong rigid wooden crate. Rain water should not enter into the Agitator internals during storage in the outer yard of power plant. Further the packing shall be done in line with requirements mentioned in point no. 2 to 20 of this section. **Imported Supply:** All imported supply should be packed as per Sea worthy packing standards as per Sub-Section D, Annexure-V. All imported items should have Sea worthy packing. Liberal packing materials and struts shall be provided to arrest rolling and to protect from transit damages.
2	Equipment and process materials shall be packed and semi-knocked down, to the extent possible, to facilitate handling and storage and to protect bearings and other machine surfaces from oxidation. Each container, box, crate or bundle shall be reinforced with steel strapping in such a manner that breaking of one strap will not cause complete failure of packaging. The packing shall be of best standard to withstand rough handling and to provide suitable protection from tropical weather while in transit and while awaiting erection at the site.
3	Equipment and materials in wooden cases or crates shall be properly cushioned to withstand the abuse of handling, transportation and storage. Packing shall include preservatives suitable to tropical conditions. All machine surfaces and bearings shall be coated with oxidation preventive compounds. All parts subject to damage when in contact with water shall be coated with suitable grease and wrapped in heavy asphalt or tar impregnated paper.
4	Crates and packing material used for shipping will become the property of end customer.
5	Packaging or shipping units shall be designed within the limitations of the unloading facilities of the receiving ports and the ship which will be used. It shall be the bidder's responsibility to investigate these limitations and to provide suitable packaging and shipping to permit transportation to site.
6	Packing (tare) shall be part of the equipment cost and shall not be subject to return. The packing should ensure integrity and cohesiveness of each delivery batch of equipment during transportation. In case of equipment assemblies and unit's delivery in the packing of glass, plastics or paper the specification of packing with the material and weight characteristics are to be indicated.
7	Each package should have the following inscriptions and signs stenciled with an indelible ink, legibly and clearly: a. Destination b. Package Number c. Gross and Net Weight d. Dimensions e. Lifting places f. Handling marks and the following delivery marking

8	Each package or shipping units shall be clearly marked or stenciled on at least two sides as per the dispatch instruction givens during the contract. In addition, each package or shipping unit shall have the symbol painted in red on at least two sides of the package, covering one fourth of the area of the side.
9	Each part of the equipment which is to be shipped as a separate piece or smaller parts packed within the same case shall be legibly marked to show the unit of which it is part, and match marked to show its relative position in the unit, to facilitate assembly in the field. Unit marks and match marks shall be made with steel stamps and with paint.
10	Each case shall contain a packing list showing the detailed contents of the package. When any technical documents are supplied together with the shipment of materials no single package shall contain more than one set of such documents. Shipping papers shall clearly indicate in which packages the technical documents are contained.
11	The case number shall be written in the form of a fraction, the numerator of which is the serial number of the case and the denominator the total number of case in which a complete unit of equipment is packed.
12	Wherever necessary besides usual inscriptions the cases shall bear special indication such as “Top”, “Do not turn over”, “Care” , “Keep Dry” etc. as well as indication of the center of gravity (with red vertical lines) and places for attaching slings (with chain marks)
13	Marking for Safe handling: To ensure safe handling, packing case shall be marked to show the following: a. Upright position b. Sling position and center of Gravity position c. Void. d. Fragile components (to be marked properly with a clear warning for safe handling)
14	Each crate or package is to contain a packing list in a waterproof envelope. All items are to be clearly marked for easy identification against the packing List. All cases, packages etc. are to be clearly marked on the outside to indicate the total weight where the weight is bearing and the correct position of the slings are to bear an identification mark relating them to the appropriate shipping documents. All stencil marks on the outside of cases are either to be made in waterproof material or protected by shellac or varnish to prevent obliteration in transit.
15	The packing slip shall contain the following information: - Customer name, Name of the equipment, Purchase Order number with Date, Address of the delivery site, Name and Address of the Sender, Serial Number of Agitator, and BHEL item Code, Gross Weight and Net weight of Supplied items.
16	Prior to transport from manufacturer’s work to destination, components of the unit shall be completely cleaned to remove any foreign particles. Flange faces and other machined surfaces shall be protected by an easily removable rust preventive coating followed by suitable wrapping.
17	All necessary painting, corrosion protection & preservation measures shall be taken as specified in painting schedule. Supplier shall consider the coastal environment zone which is defined as “very severe” during final finishing/shipping.
18	Successful bidder shall furnish the detail packing /shipment box details with information like packing box size, type of packing, weight of each consignment, sequence no. of dispatch, no. of consignment for each deliverable item against each billing break up units/ billable blocks. Without these details the BBU shall not be approved during detail engineering.
19	All items/equipment shall be dispatched in properly packed condition (i.e. no item shall be dispatched in loose condition such that it becomes difficult to store/identify its location at site at a later stage).
20	Cases which cannot be marked as above shall have metal tags with the necessary markings on them. The metal tags shall be securely attached to the packages with strong steel binding

	wire. Each piece, Skid, Case or package shipped separately shall be labelled or tagged properly.
8	**SUPERVISION OF ERECTION, TESTING AND COMMISSIONING**
1	The erection of Agitators will be done by owner as per Erection Manual and check List to be provided by the bidder during detail engineering. However, the bidder shall make visit as per enquiry/PO for the supervision of erection, pre-commissioning & post- commissioning check-up, start-up, testing and trial runs of all the items covered under the scope of supply & Services.
2	The bidder will be informed well in advance for the visit.
3	-VOID-
4	Price comparison for evaluating the lowest bid will be considered for all main supply, supervision of E&C charges and mandatory spares price all together along with the loading on account of guarantee power consumption (as applicable).
5	Scope of Supervision for Erection & commissioning: No. of visits & total no. of days to be considered shall be as indicated in price schedule.
6	Any other service required for making the installation complete in all respect within battery limits and for satisfactory erection & commissioning of the system shall be in bidder's scope.
9	**EXCLUSION**
	The following work associated with the Agitators will be by others: a. Access, Walkways, platforms and ladders b. Handling equipment (hoist) along with the handling arrangement. However, bidder shall provide the details of the same to BHEL. c. Baffle plates d. Installation, however, supervision of erection and commissioning shall be in bidder's scope
10	**INSPECTION AND TESTING**
1	The General inspection requirements to be considered are as below:
2	Bidder shall furnish written copies of shop production, fabrication and quality test procedures and drawings to be used on the Agitators for review by BHEL/end customer prior to manufacture.
3	The Bidder shall furnish performance test procedure along with standard. The test procedure will be reviewed and approved by the BHEL/customer.
4	Since there is no standard for "Acceptance Test Procedure" for Agitator, Agitator manufacturer is to submit a test procedure and Quality Plan, clearly indicating that equipment will meet the desired parameter.
5	Power consumption at motor terminal and vibration of equipment will be conducted at site. Vendor to indicate other material tests that are to be conducted as per their practice in their Quality plan.
6	No liquid should enter the tube through any flange joint. "O"-ring used in the flange joint will deteriorate at a highly chlorinated and acidic environment of medium at a maximum operating temperature unless right quality of rubber is used. Hydrostatic testing of tube assembly is required at a pressure of twice that of maximum liquid column in any tank or 30m whichever is higher. The hydro test duration will be for a minimum of 1 hr to check sweating of any flange. Hydrostatic test is meant in part for a check of equipment joint at new condition only. It is cannot be considered as a guarantee of functional objective of rubber used.

7	Mechanical Run Test (in air) Each Agitator unit shall be given a 4-hour mechanical run test in air at vendor's shop. Agitator unit shall be mounted in the same manner as it will operate in the field. During this test the record shall be made of: a) Shaft run out at free end. b) Dynamic shaft deflection adjacent to the mechanical seal/packing/vapor seal. c) Gearbox oil temperature and temperature of bearing housing in stool. The temperature of the gear box oil shall not exceed ambient plus 40 Deg. C and that of bearing housing shall not exceed from room temperature plus 20 Deg. C after temperatures have stabilized. d) Bearing Housing vibration checks shall be carried out. Maximum acceptable vibration velocity shall be 6 mm/sec. e) Noise level shall be checked and shall be within the specified limits mentioned in the specification. f) Agitator shaft RPM and motor RPM. g) Check of satisfactory operation of shut off and retracting arrangement.
8	Mechanical Run Test (in water) Each agitator unit shall be given a load test in water at the vendor's shop. The duration of this test shall be 4 hours unless agreed otherwise between the Purchaser and the vendor. The following parameters shall be recorded during the test: a) Dynamic shaft deflection adjacent to the mechanical seal/packing/vapor seal. b) Gear box bearing oil temperature and temperature of bearing housing in stool. The temperature of gear box oil shall not exceed ambient plus 40°C and that of bearing housing shall not exceed room temperature plus 20°C after the temperatures have stabilized. c) Bearing housing vibrations. Maximum acceptable vibration velocity is 6 mm/sec. d) Noise levels shall be checked and shall be within the specified limits mentioned in the specification. e) Electrical power input to the motor. f) Agitator shaft RPM and motor RPM. g) Check of satisfactory operation of shut off and retracting arrangement. As a part of the Quality Assurance Plan, bidder has to demonstrate the power consumption of each agitator at shop with the available fluid along with relevant calculation to establish the correlation with the slurry used for the project.
9	Acceptance Test (at Site) After the agitator has been installed at site and is ready for test, vendor shall depute his representative to supervise the site acceptance test
10	DYNAMICS
10.1	CRITICAL SPEED
10.1.1	Operation speed of the Agitator motor shall be at least 25% below the first critical speed
10.1.2	Additional to the requirement of the critical speed of Agitator, as specified above. Agitator manufacturer is to analyze the torsional critical speed of combined system of Agitator, Gear Box and Motor to establish there is a separation margin of minimum 20% between the torsional critical speed (dry/wet) and any operating speed.
10.2	VIBRATION SEVERITY
10.2.1	During performance test, unfiltered vibration measurements shall be made with running of Agitator in Air. Measurement shall be taken on the Gear Box thrust bearing housings as well in motor top.
10.2.2	Guaranteed Site vibration of the equipment on its own pedestal, at commissioning with normal level of liquid and with maximum liquid at respective tank, Vibration limit at site will be as per ISO-10816 and 1.5-2.3mm/sec even if Motor rating falls below 15kw.
10.2.3	Vibration measurements of bearing housing shall be made in root mean square (RMS) velocity.

10.2.4	Vibration levels measured on the non-rotating parts shall not exceed the zone limit "B" as defined in ISO 10816 at steady conditions and shall not exceed the zone limit "C" as defined in ISO 10816 at transient conditions.
11	For surfaces with rubber lining, welding shall be visually inspected to verify the absence of rough area and unacceptable transition between surfaces which prevent the adequate adherence of rubber. The acceptance criteria shall be as per latest standard.
12	For surfaces with rubber lining, degree of cleaning shall be visually checked before the application of the coating. There must be no area with oxidation, dirt or partially or generalized corrosion defects.
13	Test certificates shall be issued for each lot of raw material used in the coating, corresponding to specific weight and traction resistance.
14	For surfaces with rubber lining, adherence test shall be conducted on production samples. Adherence test shall be conducted on the actual surface through hammering. In order to verify the absence of air packets (or) surface without adherence.
15	For surfaces with rubber lining, Coating thickness shall be checked at 100%. A High voltage porosity test will be conducted on 100 % of the coated surface.
16	Out of all Agitators One Number of each type will be inspected at the Bidder's works before dispatch or where the test facilities are available.
17	The Bidder shall conduct performance test for the remaining Agitators and submit the reports.
18	Contract shaft mechanical seals shall be used during shop tests, unless the seal design is unsuitable for the shop-test condition, if applicable.
19	Agitators shall not be released for shipment, until shop tests data and performance tests curves have been approved by Owner.
20	Bidder should furnish performance guarantee as per applicable guarantee for the design, manufacture, material and safe operation of the equipment's.
21	Bidder to arrange all calibrated gauges, Instruments during inspection.
22	Mechanical running and the performance test shall be carried out. Bidder to arrange Motor of same / higher rating for the shop test and inspection.
11	**PAINTING**
1	**Painting details for agitator support: -** Please refer painting specification (SECTION-C, SUB-SECTION-C2C).
2	Rust preventive paint after inspection at shop floor before dispatch shall be in bidder's scope.
3	Corrosion protection, coating and galvanizing, painting shall be taken care by the bidder. Bidder shall submit the painting scheme during detail Engg. in line with the specification and shall be subject to approval of BHEL / End Customer.
12	**SPARES,TOOLS & TACKLES**
1	Bidder shall supply a set of special tools and tackles required either for erection or operation or maintenance of the agitator units. A list of such tools shall be submitted by bidder along with the offer.
2	Any special tools & tackles required for the entire equipment to disassemble, assemble or maintain the units, they shall be included in the quotation and furnished as part of the initial supply of the machine. List of special tools & tackles shall be decided by bidder as per his proven practice. When special tools are provided, they shall be packaged in separate, boxes with lugs and marked as "Special Tools for (tag / item number)." Each tool shall be stamped or tagged to indicate its intended usage. Levers and eye bolts for the removal of parts to be serviced shall be submitted with special tools (SECTION-II Annexure-7).
12.1	**START UP & COMMISSIONING SPARES**

	Start-up & Commissioning Spares shall be part of the main supply of the Agitators. Start-up & commissioning spares are those spares which may be required during the start- up and commissioning of the equipment/system. All spares required for successful operation till commissioning of Agitator shall come under this category. Bidder shall provide an adequate stock of such start up and commissioning spares to be brought by him to the site for the equipment erection and commissioning. The spares must be available at site before the equipment's are energized. The List of such spares to be provided during bidding stage (SECTION-II Annexure-9).
12.2	**RECOMMENDED SPARES**
	Bidders shall also furnish the recommended spares list along with the offer required for 3 years of normal operation of the plant and should be independent of the list of the mandatory spares. Prices of recommended spares will not be used for evaluation of the bids. The price of these spares will remain valid up to 6 months after placement of Notification of Award for the main equipment.
12.3	**MANDATORY SPARES:**
	Bidder to quote for the mandatory spares as per the Mandatory Spare list (SECTION-I, SUB-SECTION-D Annexure-II). Bidder shall quote for the "Mandatory Spares Part List", and it will be considered for L1 evaluation. Mandatory spare parts items shall be handed over separately and shall not be mixed with the supply of the main equipment parts. Spares shall be sent in pre-decided lots in containers/secure boxes. All boxes/containers are to be distinctly marked in red color with boldly written "S" mark on each face of the containers. Spares shall not be dispatched before dispatch of corresponding main equipment's. Each item shall be labelled in English and be packed against damage and sealed to prevent deterioration from corrosion. The protection shall be sufficient for a minimum of 10 years' storage in a dry weatherproof building. All spares supplied under this contract shall be strictly inter-changeable with the parts for which they are intended for replacements. All the mandatory spares shall be manufactured along with the main equipment components as a continuous operation as per same specification and quality plan.
13.0	**FIRST FILL OF CONSUMABLES**
I	Bidder's scope shall include supply and filling of all chemicals, lubricants, grease, filters and consumable items for operation up to commissioning including top up requirements. All lubricants proposed for the plant operation shall be suitable for all operating and environmental conditions that will be met on site consistent with good maintenance procedures as instructed in the maintenance manuals.
II	Bidder shall also supply a quantity not less than 10% of the full charge of each variety of lubricants, servo fluids, gases, chemicals etc. (as applicable) used which is expected to be utilized during the first year of operation. This additional quantity shall be supplied in separate containers.
III	Detailed specifications for the lubricating oil, grease, gases, servo fluids, control fluids, chemicals including items qualities and quantities required per month of the plant operation for the end customer/BHEL's approval herein shall be furnished within 2 months of placement of Order. On completion of erection, complete list of bearings/equipment giving their location and identification marks shall be furnished to BHEL along with lubrication requirements. All types of chemicals, consumables, lubricants and grease shall be readily obtainable locally and the number of different types shall be kept to a minimum. For each type and grade of lubricant recommended, bidder shall list at least three equivalent lubricants manufactured by alternative companies.
14.0	**BID EVALUATION CRITERIA FOR POWER CONSUMPTION:**

1.	**POWER GUARANTEE** Bidder to specify the total guaranteed power per Agitators operating at the rated capacity in their offer.
2.	**BID EVALUATION CRITERIA FOR POWER CONSUMPTION:** The following agitators will be considered for power consumption: 1) Filtrate Water Tank Agitator 2) Secondary Hydro Cyclone Feed Tank Agitator 3) Waste Water Tank Agitator 4) Limestone Slurry Storage Tank Agitator 5) Primary Hydro Cyclone Feed Tank Agitator The best of the parameter for auxiliary power consumption quoted by any qualified bidder shall be taken as the base or ceiling value. Bid prices of other bidders will be loaded for every KW excess over the ceiling value as per the formula given below. Adjustment factor for excess power consumption = (GPC-CV) X PL X No's of Working Agitators GPC- Guaranteed Power Consumption quoted by bidder in KW CV- base Value i.e. lowest quoted power consumption in KW PL- Power Loading @ USD 1538 per KW
15	**LIQUIDATED DAMAGES FOR POWER CONSUMPTION**
	If actual Power Consumption during prove out (or) PG Test operating at the duty point exceeds the value guaranteed by the bidder, liquidated damages for shortfall in performance shall be deducted from contract price as per the formula given below for Liquidated damage deductible in INR = (APC-GPC) X P X Total no of working agitators Where GPC- Guaranteed Power Consumption quoted by bidder in KW APC- Actual Power Consumption in KW N- Total Number of working Agitators P- Penalty @ 2484 USD per KW
16	**PERFORMANCE GUARANTEE**
	All performance tests for Agitators shall be carried out in accordance with any latest international codes/standards. Bidder shall furnish Performance guarantee for the design, manufacture, material, safe and trouble-free operation of the Agitators and its accessories The Bidder shall ensure a design of the equipment to achieve an average target availability of 98% for 120 days and average target availability of 95% for 1 year. Noise level ≤85 dB (A) at 1m horizontal distance from equipment/enclosures and 1.5m above operating floor is to be guaranteed. Vibration levels measured on the non-rotating parts shall not exceed the zone limit "B" as defined in ISO 10816 at steady conditions and shall not exceed the zone limit "C" as defined in ISO 10816 at transient conditions. Acceptance tests to be carried out as per the procedure defined by the bidder which shall be submitted for BHEL/ end customer approval. In the event that the performance test is unsuccessful, bidder shall take necessary remedial action at his cost and the performance test shall be repeated.
17	**DOCUMENTATION**
A	**DOCUMENTS TO BE SUBMITTED ALONG WITH THE OFFER**
	The Bidder shall submit all documents, drawings, diagrams and all such information, which

	are necessary to fully understand the offer for techno – commercial Offer. Vendors are requested to comply with above in all respect. List of such documents have been indicated in (SECTION-II Annexure-1).
B	**DOCUMENTS TO BE SUBMITTED AFTER AWARD OF CONTRACT**
	The Successful bidder shall submit necessary data, documents and drawings for review, approval as specified in this specification. Drawings that are reviewed by the end customer/ BHEL, will be returned to bidder with a transmittal letter with any comments and / or questions marked on the drawings or noted in the letter. All comments and questions must be resolved before a resubmission of drawings / documents. If the design has not developed enough to resolve some of the comments or questions, bidder shall place a "hold" on those items or areas of design. End customer/ BHEL reserves the right to return drawings unprocessed to bidder if there exists any evidence that bidder has not acknowledged all comments and questions. All necessary GA drawings, sections, sub-assembly drawings, specifications of main and sub components and necessary set of operation & maintenance manual as asked by end customer must be furnished by bidder in soft and hard copy forms. For all documents softcopy format shall be searchable pdf, however in addition all drawings, diagrams shall be supplied in ACAD or other editable format and all lists in Excel format. Further break up of technical documents will be discussed during finalization of the purchase contract. All documents in hard and soft form are to be submitted in the English language. Electronic Copies shall be submitted in primary original data format (e.g. DOC, XLS, DWG) as well as in a printable non-proprietary document format (e.g. PDF). Especially P&IDs shall be submitted as DWG files and PDF files. Bidder to ensure submission of hard copies as per end customer requirement for all engineering drg/doc and for all subsequent revisions along with a soft copy through email to concerned project team. The list of such drawing/documents have been indicated in (SECTION-I, SUB-SECTION-D Annexure-IV).
18	**LIST OF REFERENCE DRAWINGS BY BHEL**
I	The document specified in Annexure-III, Sub-Section-D of Section-I are being provided along with the tender specification for estimation and calculation purpose of the bidder.

	TITLE: 3x660 MW NABINAGAR STPP TECHNICAL SPECIFICATION FOR AGITATORS	SPECIFICATION No: PE-TS-457-571-18000-A001	
		SECTION-I, SUB-SECTION-C2	
		REV. 01	DATE: SEP. 2020
		SHEET : 1 OF 1	

CUSTOMER SPECIFICATION

	TITLE: 3x660 MW NABINAGAR STPP TECHNICAL SPECIFICATION FOR AGITATORS	SPECIFICATION No: PE-TS-457-571-18000-A001	
		SECTION-I, SUB-SECTION-C2A	
		REV. 01	DATE: SEP. 2020
		SHEET : 1 OF 1	

CUSTOMER SPECIFICATION: TECHNICAL REQUIREMENT

CLAUSE NO.	TECHNICAL REQUIREMENTS
	from the respective systems. Contractor shall make arrangements for pumping the drainage water back to the respective system with vertical sump pumps. Agitators shall also be provided to avoid settling of solids in the sump. Adequate redundancy in line with the standard practice adopted by the bidder shall be provided. This Clause covers the design, manufacture and erection of all vertical sump pumps for the FGD system.
9.02.00	The contractor shall offer only proven design in successful operation in similar application at previous installations. The design, manufacture, installation and testing of the pumps shall follow the latest applicable Indian / International (ASME / EN / Japanese) Standards.
9.03.00	The pumps shall be designed for continuous operation. The pump shall be single stage centrifugal type with semi open or open impeller. The pump impeller shall be cantilever type and shall not be supported below the base plate for easy withdrawal.
9.04.00	The pump shall deliver the rated flow at rated head with margins as specified in the respective clauses. The pump shall be capable of pumping of filtrate water with solid concentration upto 10% & particle lumps of 6-7mm. Sump pumps handling slurry shall be designed with a maximum concentration of 30% solid by weight.
9.05.00	The material chosen for the pump components shall be suitable for the fluid handled and shall be proven in similar application.
9.06.00	The pumps shall not be supported below the base plate level for easy withdrawal without entering the sump.
10.00.00	**SLURRY & PROCESS WATER TANKS**
10.01.00	All the slurry tanks (Slurry Tanks, Filtrate Tank, Secondary hydro cyclone feed tank, vacuum receiver tank, Waste water Tank, Lime Neutralization tanks etc.) shall be designed, fabricated, erected and tested in accordance with the IS:803, latest edition. Additional Corrosion allowance of 3mm on the minimum tank shell thickness as calculated by IS:803, latest edition shall be provided by the Contractor. Tanks shall be made from IS:2062 quality mild steel plates of tested quality. The tanks shall be of welded construction. Interior surface of the tanks shall lined with replacable chlorobuty/bromobutyl rubber lining of minimum 5 mm thickness and the outside surface shall be coated with paint as approved by the Employer. The Tanks shall be provided with drain, manholes, over flow & inlet level control valves etc. Coarse-screen(s) at suction-side of these pumps shall be provided.
11.00.00	**AGITATORS**
11.01.00	Agitators shall be supplied in tanks and vessels to prevent caking and settlement of particles out of the slurry, e.g. in the absorber vessel, limestone mill recycle tanks, limestone slurry tank, Auxiliary Absorbent tank, and sumps etc.
11.02.00	All agitators shall be designed for continuous operation unless otherwise specified.

CLAUSE NO.	TECHNICAL REQUIREMENTS
	Horizontal agitators shall be used for Absorber. Vertical agitators can also be used for Absorber, if it is only the standard & proven practice of the Contractor for the offered Absorber design. In other vessels and tanks vertical agitators are also acceptable if they are of proven make and the Bidders standard practice which can be proven by means of suitable references. The design of the agitators shall be of proven type.
11.03.00	Standard type agitators with suitable characteristics shall be used wherever practical. The agitators shall be complete with motor, gearbox, agitator shaft, coupling, safety guards, mechanical seal (for side entry agitators), impeller, support legs, agitator mounting flange including bolts nuts and gasket etc.
11.04.00	All agitator parts and accessories in contact with the stirred fluid shall be constructed of materials specifically designed for the conditions and nature of the stirred fluid and be resistant to erosion and corrosion.
11.05.00	The material for the shaft (which is continuously in contact with slurry) and agitator blades of the Absorber Agitators shall be made with Alloy 926 or better material. For Agitators in other tanks, agitator blades shall be made with Alloy 926 or better material & shaft can be rubber lined. This does not release the Contractor of the responsibility for selecting the correct materials.
11.06.00	Each agitator and its associated equipment shall be arranged in such a manner as to permit easy access for operation, maintenance and agitator removal without interrupting plant operation. It shall be possible to remove the sealing devices of the Agitators of the absorber vessel without having to drain completely the absorber.
11.07.00	To prevent mechanical blocking load start-up after standstill of pumps, piping and agitators for slurries shall be applied with C-hose connection.
11.08.00	Lifting lugs and eyes and other special tackle shall be provided as necessary to permit easy handling of the agitators and their components.
11.09.00	Static and dynamic (as far as applicable) balancing of all agitators shall be carried out after assembly.
11.10.00	All agitator parts and components shall be designed and calculated for fatigue life, considering maximum bending loads, induced by fluctuating hydraulic forces and torsional loads, based on the installed motor power. For side entry agitators the alternating bending moment resulting from impeller and shaft weight has to be considered additionally.
11.11.00	All exposed moving parts shall be covered by guards.
11.12.00	Side entry agitator shall be flange mounted.
11.13.00	The shape of the impeller blades of side entry agitators shall be designed to avoid wear on the impellers which will affect the agitator performance as specified for a minimum period of 2 years of continuous operation under design conditions for the range of coal & limestone specified in the specification. In order to avoid excessive wear impeller tip speeds must not exceed 12 m/s.
11.14.00	Belt drives (if applied) shall be properly designed to provide a minimum lifetime of 2 years under design conditions

	TITLE: 3x660 MW NABINAGAR STPP TECHNICAL SPECIFICATION FOR AGITATORS	SPECIFICATION No: PE-TS-457-571-18000-A001	
		SECTION-I, SUB-SECTION-C2B	
		REV. 01	DATE: SEP. 2020
		SHEET : 1 OF 1	

CUSTOMER SPECIFICATION: PROJECT SPECIFIC GENERAL REQUIREMENTS

	TITLE: 3x660 MW NABINAGAR STPP TECHNICAL SPECIFICATION FOR AGITATORS	SPECIFICATION No: PE-TS-457-571-18000-A001	
		SECTION-I, SUB-SECTION-C2B	
		REV. 01	DATE: SEP. 2020
		SHEET : 1 OF 1	

CUSTOMER SPECIFICATION : GENERAL TECHNICAL REQUIREMENTS

एनटीपीसी NTPC

GENERAL TECHNICAL REQUIREMENTS

PART - C

CONTENTS

Clause No.	Description	Page No.
1.00.00	Introduction	1
2.00.00	Brand Name	1
3.00.00	Base Offer & Alternate Proposals	1
4.00.00	Completeness of Facilities	1
5.00.00	Codes & Standards	2
6.00.00	Equipment Functional Guarantee	4
7.00.00	Design of Facilities/ Maintenance & Availability Considerations	5
8.00.00	Documents, Data and Drawings to be furnished by Contractor	5
9.00.00	Technical Co-ordination Meeting	21
10.00.00	Design Improvements	22
11.00.00	Equipment Bases	22
12.00.00	Protective Guards	22
13.00.00	Lubricants, Servo fluids and Chemicals	22
14.00.00	Lubrication	23
15.00.00	Material of Construction	23
16.00.00	Rating Plates, Name Plates & Labels	23
17.00.00	Tools and Tackles	24
18.00.00	Welding	25

Clause No.	Description	Page No.
19.00.00	Colour Code for All equipments/Pipings/PIpeServices	25
20.00.00	Protection and Preserveative shop Coating	25
21.00.00	Quality Assurance Programme	26
22.00.00	General Requirements - Quality Assurance	27
23.00.00	Quality Assurance Documents	32
24.00.00	Project Manager's Supervision	34
25.00.00	Inspection, Testing and Inspection Certificates	35
26.00.00	Pre-commissioning and Commissioning Facilities	38
27.00.00	Taking over	41
28.00.00	Training of Employer's Personnel	41
29.00.00	Safety Aspects during Construction and Erection	42
30.00.00	Noise Level	42
31.00.00	Packaging and Transportation	42
32.00.00	Electrical Equipments/Enclosures	43
33.00.00	Instrumentation and Control	43
34.00.00	Electrical Noise Control	44
35.00.00	Surge protection for solid state equipment	44
36.00.00	Instrument Air System	44
37.00.00	Tapping Points for Measurements	45
38.00.00	System Documentation	45
39.00.00	Maintenance Manuals of Electronic Modules	45

Clause No.	Description	Page No.
Annexure - I		76
Annexure - II		77
Annexure - III		78
Annxure - IV		79
Annexure - V		80
Annexure - VI		81
Annexure - VII		83

CLAUSE NO.	GENERAL TECHNICAL REQUIREMENTS

1.00.00 **INTRODUCTION**

This part covers technical requirements which will form an integral part of the Contract. The following provisions shall supplement all the detailed technical specifications and requirements brought out in Section-VI, the Technical Specification and the Technical Data Sheets.

2.00.00 **BRAND NAME**

Whenever a material or article is specified or described by the name of a particular brand, manufacturer or vendor, the specific item mentioned shall be understood to be indicative of the function and quality desired, and not restrictive; other manufacturer's products may be considered provided sufficient information is furnished to enable the Employer to determine that the products proposed are equivalent to those named.

3.00.00 **BASE OFFER & ALTERNATE PROPOSALS**

The Bidder's proposal shall be based upon the use of equipment and material complying fully with the requirements specified herein. It is recognised that the Contractor may have standardized on the use of certain components, materials, processes or procedures different than those specified herein. Alternate proposals offering similar equipment based on the manufacturer's standard practice will also be considered, provided the base offer is in line with technical specifications and such proposals meet the specified design standards and performance requirement and are acceptable to the Employer. Sufficient amount of information for justifying such proposals shall be furnished to Employer alongwith the bid to enable the Employer to determine the acceptability of these proposals.

4.00.00 **COMPLETENESS OF FACILITIES**

4.01.00 Bidders may note that this is a contract inclusive of the scope as indicated elsewhere in the specification. Each of the plant shall be engineered and designed in accordance with the specification requirement. All engineering and associated services are required to ensure a completely engineered plant shall be provided.

4.02.00 All equipments furnished by the Contractor shall be complete in every respect, with all mountings, fittings, fixtures and standard accessories normally provided with such equipment and/or those needed for erection, completion and safe operation of the equipment and for the safety of the operating personnel, as required by applicable codes, though they may not have been specifically detailed in the respective specifications, unless included in the list of exclusions.

All same standard components/ parts of same equipment provided, shall be interchangeable with one another.

CLAUSE NO.	GENERAL TECHNICAL REQUIREMENTS
4.03.00	For the C&I systems, the Contractor shall be required to provide regular information about future upgrades and migration paths to the Employer.
5.00.00	**RULES, REGULATIONS, CODES & STANDARDS**
5.01.00	In addition to the codes and standards specifically mentioned in the relevant technical specifications for the equipment / plant / system, all equipment parts, systems and works covered under this specification shall comply with all currently applicable statutory regulations and safety codes of the Republic of India, NTPC rules/codes of practices as well as of the locality where they will be installed, including the following: a) Indian Electricity Act b) Indian Electricity Rules c) Indian Explosives Act d) Indian Factories Act and State Factories Act e) Indian Boiler Regulations (IBR) f) Regulations of the Central Pollution Control Board, India g) Regulations of the Ministry of Environment & Forest (MoEF), Government of India h) Pollution Control Regulations of Department of Environment, Government of India i) State Pollution Control Board. (j.) Rules for Electrical installation by Tariff Advisory Committee (TAC). (k.) Building and other construction workers (Regulation of Employment and Conditions of services) Act, 1996 (l.) Building and other construction workers (Regulation of Employment and Conditions of services) Central Rules, 1998 (m.) Explosive Rules, 1983 (n.) Petroleum Act, 1984 (o.) Petroleum Rules, 1976,

CLAUSE NO.	GENERAL TECHNICAL REQUIREMENTS
	(p.) Gas Cylinder Rules, 1981
	(q.) Static and Mobile Pressure Vessels (Unified) Rules, 1981
	(r.) Workmen's Compensation Act, 1923
	(s.) Workmen's Compensation Rules, 1924
	(t.) NTPC Safety Rules for Construction and Erection
	(u.) NTPC Safety Policy
	(v.) Any other statutory codes / standards / regulations, as may be applicable.
5.02.00	Unless covered otherwise in the specifications, the latest editions (as applicable as on date of bid opening), of the codes and standards given below shall also apply:
	a) Bureau of Indian standards (BIS)
	b) Japanese Industrial Standards (JIS)
	c) American National Standards Institute (ANSI)
	d) American Society of Testing and Materials (ASTM)
	e) American Society of Mechanical Engineers (ASME)
	f) American Petroleum Institute (API)
	g) Standards of the Hydraulic Institute, U.S.A.
	h) International Organisation for Standardisation (ISO)
	i) Tubular Exchanger Manufacturer's Association (TEMA)
	j) American Welding Society (AWS)
	k) National Electrical Manufacturers Association (NEMA)
	l) National Fire Protection Association (NFPA)
	m) International Electro-Technical Commission (IEC)/European Norm (EN)
	n) Expansion Joint Manufacturers Association (EJMA)
	o) Heat Exchange Institute (HEI)

CLAUSE NO.	GENERAL TECHNICAL REQUIREMENTS
	p) IEEE standard
	q) JEC standard
5.03.00	Other International/ National standards such as DIN, JIS, VDI, EN, BS, GOST etc. shall also be accepted for only material codes and manufacturing standards, subject to the Employer's approval, for which the Bidder shall furnish, adequate information to justify that these standards are equivalent or superior to the standards mentioned above. In all such cases the Bidder shall furnish specifically the variations and deviations from the standards mentioned elsewhere in the specification together with the complete word to word translation of the standard that is normally not published in English.
5.04.00	Not used.
5.05.00	In the event of any conflict between the codes and standards referred to in the above clauses and the requirement of this specification, the requirement of Technical Specification shall govern.
5.06.00	Two (2) English language copies of all national and international codes and/or standards used in the design of the plant, equipment, civil, structural and architectural works shall be provided by the Contractor to the Employer within two calendar months from the date of the Notification of Award.
5.07.00	In case of any change in codes, standards & regulations between the date of bid opening and the date when vendors proceed with fabrication, the Employer shall have the option to incorporate the changed requirements or to retain the original standard. It shall be the responsibility of the Contractor to bring to the notice of the Employer such changes and advise Employer of the resulting effect.
5.08.00	A detailed list of standards apart from those mentioned in the respective detailed specifications in other parts of Section-VI to which all equipment/systems/civil works should conform as indicated in this Part C and elsewhere in the specification.
6.00.00	**EQUIPMENT FUNCTIONAL GUARANTEE**
6.01.00	The functional guarantees of the equipment under the scope of the Contract is given in Section-VI Part - A of Technical Specifications. These guarantees shall supplement the general functional guarantee provisions covered under Defect liabilities Section-IV, General Conditions of Contract.
6.02.00	Liquidated damages for shortfall in meeting functional guarantee(s) during the performance and guarantee tests shall be assessed and recovered from the Contractor as specified elsewhere in this specification.

CLAUSE NO.	GENERAL TECHNICAL REQUIREMENTS
7.00.00	**DESIGN OF FACILITIES/ MAINTENANCE & AVAILABILITY CONSIDERATIONS**
7.01.00	**DESIGN OF FACILITIES**
	All the design procedures, systems and components proposed shall have already been adequately developed and shall have demonstrated good reliability under similar conditions elsewhere.
	The Contractor shall be responsible for the selection and design of appropriate equipments to provide the best co-ordinated performance of the entire system. The basic requirements are detailed out in various clauses of the Technical Specifications. The design of various components, assemblies and subassemblies shall be done so that it facilitates easy field assembly and dismantling. All the rotating components shall be so selected that the natural frequency of the complete unit is not critical or close to the operating range of the unit.
7.02.00	**MAINTENANCE AND AVILABILITY CONSIDERATIONS**
	Equipment/works offered shall be designed for high availability, low maintenance and ease of maintenance. The Bidder shall specifically state the design features incorporated to achieve high degree of reliability/ availability and ease of maintenance. The Bidder shall also furnish details of availability records in the reference plants stated in his experience list.
	Bidder shall state in his offer the various maintenance intervals, spare parts and man-hour requirement during such operation. The intervals for each type of maintenance namely inspection of the furnace, inspection of the entire hot gas path and the minor and major overhauls shall be specified in terms of fired hours , clearly defining the spare parts and man-hour requirement for each stage.
	Lifting devices i.e. hoists and chain pulley jacks ,etc. shall be provided by the contractor for handling of any equipment or any of its part having weight in excess of 500 Kgs during erection and maintenance activities.
	Lifting devices like lifting tackles, slings, etc. to be connected to hook of the hoist / crane shall be provided by the contractor for lifting the equipment and accessories covered under the specification.
8.00.00	**DOCUMENTS, DATA AND DRAWINGS TO BE FURNISHED BY CONTRACTOR**
8.01.00	Bidders may note that this is a contract inclusive of the scope as indicated elsewhere in the specification. Each of the plant and equipment shall be fully integrated, engineered and designed to perform in accordance with the technical specification. All engineering and technical services required to ensure a completely

engineered plant shall be provided in respect of mechanical, electrical, control & instrumentation, civil & structural works as per the scope.

Each main and auxiliary equipment/item of the plant including instruments shall be assigned a unique tag number. The assignment of tag numbers shall be in accordance with KKS system. In all drawings/documents/data sheet etc. KKS tag number of the equipment/item/instrument etc. shall be indicated.

The Contractor shall furnish engineering data /drawings in accordance with the schedule of information as specified in Technical Data Sheets and Technical Specification.

A comprehensive engg and quality coordination procedure shall be finalized with the successful bidder covering salient features as described in this section of specifications.

8.02.00 The number of copies/prints/CD-ROMs/manuals to be furnished for various types of document is given in **Annexure-VI** to this Part-C, Section-VI of the Technical Specification.

8.03.00 The documentation that shall be provided by the Contractor is indicated in the various sections of specification. This documentation shall include but not be limited to the following:

8.03.01 A) **BASIC ENGINEERING DOCUMENTATION**

Prior to commencement of the detailed engineering work, the Contractor shall furnish a Plant Definition Manual within 12 weeks from the date of the Notification of Award. This manual shall contain the following as a minimum:

i) System description of all the mechanical, electrical, control & instrumentation & civil systems.

ii) Technology scan for each system / sub-system & equipment.

iii) Selection of appropriate technology / schemes for various systems/ subsystems including techno-economic studies between various options.

iv) Optimisation studies including thermal cycle optimisation.

v) Sizing criteria of all the systems, sub-systems/ equipments/ structures/ equipment foundations alongwith all calculations justifying and identifying the sizing and the design margins.

vi) Schemes and Process & Instrumentation diagrams for the various systems/ sub-system with functional write-ups.

CLAUSE NO.	GENERAL TECHNICAL REQUIREMENTS	एनटीपीसी NTPC

vii) Operation Philosophy and the control philosophy of the equipments/system covered under the scope.

ix) ~~General Layout plan of the FGD System incorporating all facilities in Bidder's as well as those in the Employer's scope. This drawing shall also be furnished in the form of CD-ROMs to the Employer for engineering of areas not included in bidder's scope.~~

x) ~~Basic layouts and cross sections of the main plant building (various floor elevations), boiler, fuel oil area and other areas included in the scope of the bidder.~~

xi) Documentation in respect of Quality Assurance System as listed out elsewhere in this specification.

The successful bidder shall furnish within three (3) weeks from the date of Notification of Award, a list of contents of the Plant Definition Manual (PDMs) including techno-economic studies, which shall then be mutually discussed & finalised with the Employer.

B) **DETAILED ENGINEERING DOCUMENTS**

~~i) General layout plan of the FGD System.~~

ii) Layouts, general arrangements, elevations and cross-sections drawings for all the equipment and facilities of the plant.

iii) Flow diagram, process and instrumentation diagrams along with write up and system description.

~~iv) Performance curves for Absorber~~

~~v) Piping isometric, composite layout and~~ fabrication drawings.

vi) ~~Piping engineering diagrams, pipe and fittings schedules, valve schedules, hanger and support schedules, insulation schedules.~~

vii) Technical data sheets for all bought out and manufactured items. Contractor shall use the Employer's specifications as a base for placement of orders on their sub vendors.

viii) Detailed design calculations for components, system, piping etc., wherever applicable including sizing calculations for all auxiliaries like mills, fans etc. as per criteria specified elsewhere in specification.

ix) ~~Absorber sizing calculations. Absorber performance data.~~

NABINAGAR POWER GENERATING COMPANY PVT. LTD. NPGC

Bharat Heavy Electricals Ltd. Power Sector Marketing New Delhi-110

CLAUSE NO.	GENERAL TECHNICAL REQUIREMENTS	
	x)	~~Mass Balance Diagram~~
	xi)	Characteristic Curves/ Performance Correction Curves.
	xii)	Comprehensive list of all terminal points which interface with Employer's facilities, giving details of location, terminal pressure, temperature, fluid handled & end connection details, forces, moments etc.
	xiii)	Power supply single line diagram, block logics, control schematics, electrical schematics, etc.
	xiv)	Protection system diagrams and relay settings.
	xv)	Cables schedules and interconnection diagrams.
	xvii)	Cable routing plan.
	xviii)	Instrument schedule, measuring point list, I/O list, Interconnection & wiring diagram, functional write-ups, and installation drawings for field mounted instruments, logic diagrams, control schematics, wiring and tubing diagrams of panels and enclosures etc. Drawings for open loop and close loop controls (both hardware and software). Motor list and valve schedule including type of actuator etc.
	xix)	Alarm and annunciation/ Sequence of Event (SOE) list and alarms & trip set points.
	xx)	Sequence and protection interlock schemes.
	xxi)	Type test reports, insulation co-ordination study report
	xxii)	Control system configuration diagramsand card circuit diagrams and maintenance details.
	xxiii)	Detailed Control system manuals.
	xxiv)	Detailed flow chart for digital control system.
	xv)	Mimic diagram layout, Assignment for other application engg.drawings and documents.
	xxvi)	~~Civil and Structural works drawings and documents for all structures, facilities, architectural works, foundations underground and overground works and super-structural works as included in the~~

~~scope of the bidder civil calculation sheets including structural analysis and design alongwith output results.~~

xxvii) Underground facilities, levelling, sanitary, land scaping drawings.

xxviii) Geotechnical investigation and site survey reports (if and as applicable).

xxix) Model study reports wherever applicable.

xxx) Functional & guarantee test procedures and test reports.

xxxi) Documentation in respect of Quality Assurance System, and Documentation in respect of Commissioning, as listed out elsewhere in this specification.

xxxii) Maintenance schedule for ~~Absorber &~~ auxiliaries clearly indicating interval, duration if shutdown required, manhours required and tools & tackles required for maintenance.

The Contractor's while submitting the above documents/ drawings for approval/ reference as the case may be, shall mark on each copy of submission the reference letter alongwith the date vide which the submissions are made.

8.03.02 **INSTRUCTION MANUALS**

The Contractor shall make first submission of instruction manual for all the equipments covered under the Contract as per agreed engineering information schedule. The Instruction manuals shall contain full details required for erection, commissioning, operation and maintenance of each equipment. The manual shall be specifically compiled for this project. After finalisation and approval of the Employer the Instruction Manuals shall be submitted as indicated in **Annexure-IV.** The Contract shall not be considered to be completed for purposes of taking over until the final Instructions manuals have been supplied to the Employer. The Instruction Manuals shall comprise of the following.

A) ERECTION MANUALS

The erection manuals shall be submitted atleast three (3) months prior to the commencement of erection activities of particular equipment/system. The erection manual should contain the following as a minimum.

a) Erection strategy.

b) Sequence of erection.

NABINAGAR POWER GENERATING CO. PVT. LTD. NPGC

Bharat Heavy Electricals Power Sector Markting New Delhi

c) Erection instructions.

d) Critical checks and permissible deviation/tolerances.

e) List of tool, tackles, heavy equipments like cranes, dozers, etc.

f) Bill of Materials

g) Procedure for erection and General Safety procedures to followed during erection/installation.

h) Procedure for initial checking after erection.

i) Procedure for testing and acceptance norms.

j) Procedure / Check list for pre-commissioning activities.

k) Procedure / Check list for commissioning of the system.

l) Safety precautions to be followed in electrical supply distribution during erection.

B) OPERATION & MAINTENANCE MANUALS

a) The manual shall be a two rim PVC bound stiff sided binder able to withstand constant usage or where a thicker type is required it shall have locking steel pins, the size of the manual shall not be larger than international size A3. The cover shall be printed with the Project Name, Services covered and Volume / Book number Each section of the manual shall be divided by a stiff divider of the same size as the holder. The dividers shall clearly state the section number and title. All written instructions within the manual not provided by the manufacturers shall be typewritten with a margin on the left hand side.

b) The arrangement and contents of O & M manuals shall be as follows:

1) Chapter 1 - Plant Description: To contain the following sections specific to the equipment/system supplied

(a) Description of operating principle of equipment / system with schematic drawing / layouts.

(b) Functional description of associated accessories / controls. Control interlock protection write up.

(c) Integrated operation of the equipment alongwith the intended system. (This is to be given by the supplier of the Main equipment by taking into account the operating instruction given by the associated suppliers).

(d) Exploded view of the main equipment, associated accessories and auxiliaries with description. Schematic drawing of the equipment alongwith its accessories and auxiliaries.

(e) Design data against which the plant performance will be compared.

(f) Master list of equipments, Technical specification of the equipment/ system and approved data sheets.

(g) Identification system adopted for the various components, (it will be of a simple process linked tagging system).

(h) Master list of drawings (as built drawing - Drawings to be enclosed in a separate volume).

2) Chapter 2.0 - Plant Operation: To contain the following sections specific to the equipment supplied

(a) Protection logics provided for the equipment alongwith brief philosophy behind the logic, Drawings etc.

(b) Limiting values of all protection settings.

(c) Various settings of annunciation/interlocks provided.

(d) Startup and shut down procedure for equipment alongwith the associated systems in step mode.

(e) Do's and Don'ts related to operation of the equipment.

(f) Safety precautions to be take during normal operation. Emergency instruction on total power failure condition/lubrication failure/any other conditions.

(g) Parameters to be monitored with normal value and limiting values.

(h) Equipment isolating procedures.

CLAUSE NO.	GENERAL TECHNICAL REQUIREMENTS	
	(i)	Trouble shooting with causes and remedial measures.
	(j)	Routine testing procedure to ascertain healthiness of the safety devices alongwith schedule of testing.
	(k)	Routine Operational Checks, Recommended Logs and Records
	(l)	Change over schedule if more than one auxiliary for the same purpose is given.
	(m)	Preservation procedure on long shut down.
	(n)	System/plant commissioning procedure.
	3)	Chapter 3.0 - Plant Maintenance- To contain the following sections specific to the equipment supplied.
	(a)	Exploded view of each of the equipments. Drawings alongwith bill of materials including name, code no. & population.
	(b)	Exploded view of the spare parts and critical components with dimensional drawings (In case of Electronic cards, the circuit diagram to be given) and spare parts catalogue for each equipment.
	(c)	List of Special T/ P required for Overhauling /Trouble shooting including special testing equipment required for calibration etc.
	(d)	Stepwise dismantling and assembly procedure clearly specifying the tools to be used, checks to be made, records to be maintained etc. Clearance to be maintained etc.
	(e)	Preventive Maintenance schedules linked with running hours/calendar period alongwith checks to be carried out.
	(f)	Overhauling schedules linked with running hours/calendar period alongwith checks to be done.
	(g)	Long term maintenance schedules
	(h)	Consumables list alongwith the estimated quantity required during normal running and during maintenance like Preventive Maintenance and Overhauling.
	(i)	List of lubricants with their Indian equivalent, Lubrication Schedule including charts showing lubrication checking, testing and replacement procedure to be carried daily, weekly, monthly & at

longer intervals to ensure trouble free operation and quantity required for complete replacement.

(j) Tolerance for fitment of various components.

(k) Details of sub vendors with their part no. in case of bought out items.

(l) List of spare parts with their Part No, total population, life expediency & their interchangeability with already supplied spares to NTPC.

(m) List of mandatory and recommended spare list along with manufacturing drawings, material specification & quality plan for fast moving consumable spares.

(n) Lead time required for ordering of spares from the equipment supplier, instructions for storage and preservation of spares.

(o) General information on the equipment such as modification carried out in the equipment from its inception, equipment population in the country / foreign country and list of utilities where similar equipments have been supplied.

8.03.03 After finalization and approval of the Employer, the O & M Manuals shall be submitted as indicated in Annexure-VI. The Contract shall not be considered to be completed for purposes of taking over until the final Instructions manuals (both erection and O & M manuals have been supplied to the Employer.

If after the commissioning and initial operation of the plant, the instruction manuals (Erection and /or O &M manuals) require modifications/additions/ changes, the same shall be incorporated and the updated final instruction manuals shall be submitted by the Contractor to the Employer for records and number of copies shall be as mentioned in Annexure-VI.

8.03.03 **PLANT HANDBOOK AND PROJECT COMPLETION REPORT**

8.03.03.01 **PLANT HANDBOOK**

The Contractor shall submit to the Employer a preliminary plant hand book preferably in A-4 size sheets which shall contain the design and performance data of various plants, equipments and systems covering the complete project including

i) Design and performance data.

ii) Process & Instrumentation diagrams.

iii) Single line diagrams.

iv) Sequence & Protection Interlock Schemes.

v) Alarm and trip values.

vi) Performance Curves.

vii) General layout plan and layout of main plant building and auxiliary buildings

viii) Important Do's & Don't's

The plant handbook shall be submitted within twelve (12) months from the date of award of contract. After the incorporation of Employer's comments, the final plant handbook complete in all respects shall be submitted three (3) months before start-up and commissioning activities.

8.03.03.02 **PROJECT COMPLETION REPORT**

The Contractor shall submit a Project Completion Report at the time of handing over the plant.

8.03.04 **DRAWINGS**

a) i) All the FGD plant layouts shall be made in computerised 3D modelling system. The Employer reserves the right to review the 3D model at different stages during the progress of engineering. The layout drawings submitted for Employer's review shall be fully dimensioned and extracted from 3D model after interference check.

ii) All documents submitted by the Contractor for Employer's review shall be in electronic form (soft copies) along with the desired number of hard copies as per **Annexure-VI** of Part-C. The soft copies shall be uploaded by the vendors in C-folders, a Web-based system of NTPC ERP, for which a username and password will be allotted to the new vendor by NTPC.

Similarly, the vendor can download the drawings/documents, approved/ commented by NTPC, through above site.

The soft copies of identified drawings/documents shall be in pdf format, whereas the attachments/reply to the submitted document(s) can be in .doc, .xls, .pdf, .dwg or .std formats.

iii) Final copies of the approved drawings along with requisite number of hard copies shall be submitted as per **Annexure-VI** of Part-C.

iv) Contractor shall prepare the model of all the facilities located in FLUE GAS DESULPHURISATION (FGD) SYSTEM PACKAGE (including all

CLAUSE NO.	GENERAL TECHNICAL REQUIREMENTS

facilities), and any other facility in an integrated & intelligent 3D software solution using rule-based, data centric 3D Design software with equipment drawings, data sheets, intelligent P&ID correlated with intelligent 3D Model, BOQ, schematics and logic diagrams etc. attached to the respective equipment / systems in the aforesaid 3D model. Contractor shall make a presentation on 3D model every 3 months from LOA to enable NTPC to review the progress of engineering. After the completion of engineering the corresponding complete 3D review model shall be handed over to the employer for its reference.

Contractor shall provide 3D model (which shall include visual interference check, walk-through animation, video simulation for major equipment placement and removal, visual effect, photo realism etc), which is extracted from intelligent 3D model, for employer's review as & when desired by employer. However, all piping layouts, equipment layouts, floor plans, ducting layout (Air/flue gas, A/C, Ventilation etc.), General Arrangement drawings of major buildings, structural arrangement drawings and RCC layout drawings shall necessarily be extracted from the aforesaid 3D model and submitted for employer's review along with the 3D review model to enable NTPC to review and approve these drawings.

b) All documents/text information shall be in latest version of MS Office / MS Excel / PDF FORMAT as applicable.

c) All drawings submitted by the Contractor including those submitted at the time of bid shall be in sufficient detail indicating the type, size, arrangement, weight of each component for packing and shipment, the external connection, fixing arrangement required, the dimensions required for installation and interconnections with other equipments and materials, clearance and spaces required between various portions of equipment and any other information specifically requested in the drawing schedules.

d) Each drawing submitted by the Contractor (including those of subvendors) shall bear a title block at the right hand bottom corner with clear mention of the name of the Employer, the system designation, the specifications title, the specification number, the name of the Project, drawing number and revisions. If standard catalogue pages are submitted the applicable items shall be indicated therein. All titles, notings, markings and writings on the drawing shall be in English. All the dimensions should be in metric units.

e) The drawings submitted by the Contractor (or their subvendors) shall bear Employer's drawing number in addition to contractor's (their sub-vendor's) own drawing number. Employer's drawing numbering system shall be made available to the successful bidder so as to enable him to assign Employer's drawing numbers to the drawings to be submitted by him during the course of execution of the Contract.

The Contractor shall also furnish a "Master Drawing List" which shall be a comprehensive list of all drawings/ documents/ calculations envisaged to be furnished by him during the detailed engineering to the Employer. Such list should clearly indicate the purpose of submission of these drawings i.e. "FOR APPROVAL" or "FOR INFORMATION ONLY".

Similarly, all the drawings/ documents submitted by the Contractor during detailed engineering stage shall be marked "FOR APPROVAL" or "FOR INFORMATION" prior to submission. Further, space shall be identified on each drawing for Approval stamp and electronic signature.

f) The furnishing of detailed engineering data and drawings by the Contractor shall be in accordance with the time schedule for the project. The review of these documents/ data/ drawings by the Employer will cover only general conformance of the data/ drawings/ documents to the specifications and contract, interfaces with the equipments provided by others and external connections & dimensions which might affect plant layout. The review by the Employer should not be construed to be a thorough review of all dimensions, quantities and details of the equipments, materials, any devices or items indicated or the accuracy of the information submitted. The review and/ or approval by the Employer/ Project Manager shall not relieve the Contractor of any of his responsibilities and liabilities under this contract.

g) After the approval of the drawings, further work by the Contractor shall be in strict accordance with these approved drawings and no deviation shall be permitted without the written approval of the Employer.

h) All manufacturing, fabrication and execution of work in connection with the equipment / system, prior to the approval of the drawings, shall be at the Contractor's risk. The Contractor is expected not to make any changes in the design of the equipment /system, once they are approved by the Employer. However, if some changes are necessitated in the design of the equipment/system at a later date, the Contractor may do so, but such changes shall promptly be brought to the notice of the Employer indicating the reasons for the change and get the revised drawing approved again in strict conformance to the provisions of the Technical Specification.

i) Drawings shall include all installations and detailed piping layout drawings. Layout drawings for all piping of 65 mm and larger diameter shall be submitted for review/ approval of Employer piror to erection. Small diameter pipes shall however be routed as per site conditions in consultation with site authority/ representative of Employer based on requirements of such piping indicated in approved/ finalised Flow Scheme/ Process & Instrumentation Diagrams and/or the requirements cropping up for draining & venting of larger diameter piping or otherwise after their erection as per actual physical condition for the entire scope of work of this package.

Assessing & anticipating the requirement and supply of all piping and equipment shall be done by the contractor well in advance so as not to hinder the progress of piping & equipment erection, subsequent system charging and its effective draining & venting arrangement as per site suitability.

j) As Built Drawings

After final acceptance of individual equipment / system by the Employer, the Contractor will update all original drawings and documents for the equipment / system to "as built" conditions and submit no. of copies as per **Annexure VI**.

k) Drawings must be checked by the Contractor in terms of its completeness, data adequacy and relevance with respect to Engineering schedule prior to submission to the Employer. In case drawings are found to be submitted without proper checking by the Contractor, the same shall not be reviewed and returned to the Contractor for re-submission. The contractor shall make a visit to site to see the existing facilities and understand the layout completely and collect all necessary data/ drawings at site which are needed as an input to the engineering. The contractor shall do the complete engineering including interfacing and integration of all his equipment, systems & facilities within his scope of work as well as interface engineering & integration of systems, facilities, equipment & works under Employer's scope and submit all necessary drawings/ documents for the same.

l) The Contractor shall submit adequate prints of drawing / data / document for Employer's review and approval. The Employer shall review the drawings and return soft copy to the Contractor authorizing either to proceed with manufacture or fabrication, or marked to show changes desired. When changes are required, drawings shall be re-submitted promptly, with revisions clearly marked, for final review. Any delays arising out of the failure of the Contractor to submit/rectify and resubmit in time shall not be accepted as a reason for delay in the contract schedule.

m) All engineering data submitted by the Contractor after final process including review and approval by the Project Manager/ Employer shall form part of the contract documents and the entire works covered under these specification shall be performed in strict conformity with technical specifications unless otherwise expressly requested by the Project Manager in writing.

n) The Contractor shall submit drawings in line with the suggestive MDL covered in Part-B, Section-VI of Technical Specification and which shall be duly integrated with approved PERT network.

8.04.00 **ENGINEERING INFORMATION SUBMISSION SCHEDULE**

CLAUSE NO.	GENERAL TECHNICAL REQUIREMENTS
	Prior to the award of Contract, a Detailed Engineering Information Submission Scheduler/Master Drawing List duly integrated with approved PERT network shall be tied up with the Employer. For this, the bidder shall furnish a detailed list of engineering information alongwith the proposed submission schedule. This list would be a comprehensive one including all engineering data / drawings / information for all bought out items and manufactured items. The information shall be categorized into the following parts. i) Information that shall be submitted for the approval to the Employer before proceeding further, and ii) Information that would be submitted for Employer's information only. The Master Drawing List (MDL) shall be updated periodically and submitted to the employer, highlighting the changes made in MDL. The schedule should allow adequate time for proper review and incorporation of changes/ modifications, if any, to meet the contract without affecting the equipment delivery schedule and overall project schedule. The early submission of drawings and data is as important as the manufacture and delivery of equipment and hardware and this shall be duly considered while determining the overall performance and progress.
8.05.00	**ENGINEERING PROGRESS AND EXCEPTION REPORT**
8.05.01	The Contractor shall submit every month an Engineering progress and Exception Report giving the status of each engineering information including a) A list of drawings/engineering information which remains unapproved for more than four (4) weeks after the date of first submission b) Drawings which were not submitted as per agreed schedule.
8.05.02	The draft format for this report shall be furnished to the Employer within four (4) weeks of the award of the contract, which shall then be discussed and finalised with the Employer.
8.06.00	**Engineering Co-ordination Procedure**
8.06.01	The following principal coordinators will be identified by respective organizations at time of award of contract: NTPC Engineering Coordinator (NTPC EC): Name :

CLAUSE NO.	GENERAL TECHNICAL REQUIREMENTS
	Designation : Address : a) Postal : b) Telegraphic / e-Mail : c) FAX : TELEPHONE : Contractor's/ Vendor's Engineering Coordinator (VENDOR EC): Name : Designation : Address : a) Postal : b) Telegraphic / e-Mail : c) FAX : TELEPHONE :
8.06.02	All engineering correspondence shall be in the name of above coordinators on behalf of the respective organizations.
8.06.03	Contractor's/Vendor's Drawing Submission and Approval Procedure: a) All data/information furnished by Vendor in the form of drawings/ documents/catalogues or in any other form for NTPC's information/ interface and or review and approval are referred by the general term "drawings". b) The 'Master drawings list' indicating titles, Drawing Number, Date of submission and approval etc. shall be finalised mutually between Contractor and Employer before the award of contract. This list shall be updated if required at suitable interval during detailed engineering. c) All drawings (including those of subvendor's) shall bear at the right hand bottom corner the 'title plate' with all relevant information duly filled in. The Contractor shall furnish this format to his subvendor along with his purchase order for subvendor's compliance. d) Employer and contractor shall follow their own numbering systems for the drawings. However, Employer shall intimate the contractor, NTPC drawing number on receipt of the first submission of each drawing. Vendor,

thereafter, shall indicate NTPC's drawing number in subsequent Submission, in the space provided for this purpose in title plate, in addition to his own drawing number.

e) The contractor shall make a visit to site to see the existing facilities and understand the layout completely and collect all necessary data / drawings at site which are needed as an input to the engineering. The contractor shall do the complete engineering including interfacing and integration of all his equipment, systems & facilities within his scope of work as well as interface engineering & integration of systems, facilities, equipment & works under Employer's scope and submit all necessary drawings/ documents for the same.

f) Drawings must be checked by the Contractor in terms of its completeness, data adequacy and relevance with respect to engineering schedule prior to submission to the Employer. In case drawings are found to be submitted without proper endorsement for checking by the Contractor, the same shall not be reviewed and returned to the Contractor for re-submission.

g) The Contractor shall submit adequate prints of drawing / data / document for Employer's review and approval. The drawings submitted by the Contractor/vendor shall be reviewed by NTPC and their comments shall be forwarded within four (4) weeks of receipt of drawings. Upon review of each drawing, depending on the correctness and completeness of the drawing, the same will be categorized and approval accorded in one of the following categories :

CATEGORY- I:	Approved
CATEGORY- II	Approved, subject to incorporation of comments/ modification as noted. Resubmit revised drawing incorporating the comments.
CATEGORY –III	Not approved. Resubmit revised drawings for approval after incorporating comments/ modification as noted.
CATEGORY -IV	For information and records.

h) Contractor shall resubmit the drawings approved under Category II, III & IVR within three (3) weeks of receipt of comments on the drawings, incorporating all comments. Every revision of the drawing shall bear a revision index wherein such revisions shall be highlighted in the form of description or marked up in the drawing identifying the same with relevant revision Number enclosed in a triangle (eg. 1, 2, 3 etc). Contractor shall not make any changes in the portions of the drawing other than those commented. If changes are required to be made in the portions already approved, the

CLAUSE NO.	GENERAL TECHNICAL REQUIREMENTS	एनटीपीसी NTPC

Contractor shall resubmit the drawing identifying the changes for Employer's review and approval. **Drawings resubmitted shall show clearly the portions where the same are revised marking the relevant revision numbers and Employer shall review only such revised portion of documents.**

i) In case, the Contractor/ Vendor does not agree with any specific comment, he shall furnish the explanation for the same to NTPC for consideration. In all such cases the Contractor shall necessarily enclose explanations along with the revised drawing (taking care of balance comments) to avoid any delay and/or duplication in review work.

j) It is responsibility of the Contractor/ Vendor to get all the drawings approved in the Category I & IV (as the case may be) and complete engineering activities within the agreed schedule. Any delay arising out of submission and modification of drawings shall not alter the contract completion schedule.

k) If Contractor/ Vendor fails to resubmit the drawings as per the schedule, construction work at site will not be held up and work will be carried out on the basis of comments furnished on previous issues of the drawing.

l) These comments will be taken care by the contractor while submitting the revised drawing.

The contractor shall use a single transmittal for drawings. Submission. This shall include transmittal numbers and date, number of copies being sent, names of the agencies to whom copies being sent, drawing number and titles, remarks or special notes if any etc.

9.00.00 **TECHNICAL CO-ORDINATION MEETING**

9.01.00 The Contractor shall be called upon to organise and attend monthly Design/ Technical Co-ordination Meetings (TCMs) with the Employer/Employer's representatives and other Contractors of the Employer during the period of contract. The Contractor shall attend such meetings at his own cost at NEW DELHI / NOIDA or at mutually agreed venue as and when required and fully co-operate with such persons and agencies involved during the discussions.

9.02.00 The Contractor should note that Time is the essence of the contract. In order to expedite the early completion of engineering activities, the Contractor shall submit all drawings as per the agreed Engineering Information Submission Schedule. The drawings submitted by the Contractor will be reviewed by the Employer as far as practicable within three (3) weeks from the date of receipt of the drawing .The comments of the Employer shall then be discussed across the table during the above Technical Co-ordination Meeting (s) wherein best efforts shall be made by both sides to ensure the approval of the drawing.

CLAUSE NO.	GENERAL TECHNICAL REQUIREMENTS
9.02.01	The Contractor shall ensure availability of the concerned experts / consultants/ personnel who are empowered to take necessary decisions during these meetings. The Contractor shall be equipped with necessary tools and facilities so that the drawings/documents can be resubmitted after incorporating necessary changes and approved during the meeting itself.
9.02.02	Should any drawing remain unapproved for more than six (6) weeks after it's first submission ,this shall be brought out in the monthly Engineering Progress and Exception Report with reasons thereof.
9.03.0	Any delays arising out of failure by the Contractor to incorporate Employer's comments and resubmit the same during the TCM shall be considered as a default and in no case shall entitle the Contractor to alter the Contract completion date.
10.00.00	**DESIGN IMPROVEMENTS**
	The Employer or the Contractor may propose changes in the specification of the equipment or quality thereof and if the parties agree upon any such changes the specification shall be modified accordingly.
	If any such agreed upon change is such that it affects the price and schedule of completion, the parties shall agree in writing as to the extent of any changing the price and/or schedule of completion before the Contractor proceeds with the change. Following such agreement, the provision thereof, shall be deemed to have been amended accordingly.
11.00.00	**EQUIPMENT BASES**
	A cast iron or welded steel base plate shall be provided for all rotating equipment which is to be installed on a concrete base, unless otherwise specifically agreed to by the Employer. Each base plate shall support the unit and its drive assembly, shall be of a neat design with pads for anchoring the units, shall have a raised lip all around, and shall have threaded drain connections.
12.00.00	**PROTECTIVE GUARDS**
	Suitable guards shall be provided for protection of personnel on all exposed rotating and/or moving machine parts. All such guards shall be designed for easy installation and removal for maintenance purpose.
13.00.00	**LUBRICANTS, SERVO FLUIDS AND CHEMICALS**
13.01.00	I. All the first fills of consumables and one years topping requirement of consumables such as greases, oil, lubricants, servo fluids / control fluids, gases and essential chemicals etc. which will be required to put the equipment covered under the scope of specifications, into successful commissioning / initial operation and to establish completion of facilities shall

CLAUSE NO.	GENERAL TECHNICAL REQUIREMENTS
	be supplied by the Contractor. Suitable standard lubricants as available in India are desired. Efforts should be made to limit the variety of lubricants to minimum. Bidder shall supply a quantity not less than 10 % of the full charge or one (1) year topping requirement mentioned above (whichever is higher) of each variety of lubricants, servo fluids, gases, chemicals etc (as detailed above) which is expected to be utilized during the first year of operation. The additional quantity shall be supplied in separate container.
13.02.00	As far as possible lubricants marketed by the Indian Oil Corporation shall be used. The variety of lubricants shall be kept to a minimum possible. Detailed specifications for the lubricating oil, grease, gases, servo fluids, control fluids, chemicals etc. required for the complete plant covered herein shall be furnished. On completion of erection, a complete list of bearings/ equipment giving their location and identification marks shall be furnished to the Employer alongwith lubrication requirements.
14.00.00	**LUBRICATION**
14.01.00	Equipment shall be lubricated by systems designed for continuous operation. Lubricant level indicators shall be furnished and marked to indicate proper levels under both standstill and operating conditions.
15.00.00	**MATERIAL OF CONSTRUCTION**
15.01.00	All materials used for the construction of the equipment shall be new and shall be in accordance with the requirements of this specification. Materials utilised for various components shall be those which have established themselves for use in such applications.
16.00.00	**RATING PLATES, NAME PLATES & LABELS**
16.01.00	Each main and auxiliary item of plant including instruments shall have permanently attached to it in a conspicuous position, a rating plate of non-corrosive material upon which shall be engraved manufacturer's name, equipment, type or serial number together with details of the ratings, service conditions under which the item of plant in question has been designed to operate, and such diagram plates as may be required by the Employer.
16.02.00	Each item of plant shall be provided with nameplate or label designating the service of the particular equipment. The inscriptions shall be approved by the Employer or as detailed in appropriate section of the technical specifications.

CLAUSE NO.	GENERAL TECHNICAL REQUIREMENTS
16.03.00	Such nameplates or labels shall be of white nonhygroscopic material with engraved black lettering or alternately, in the case of indoor circuit breakers, starters, etc. of transparent plastic material with suitably coloured lettering engraved on the back. The name plates shall be suitably fixed on both front and rear side.
16.04.00	Items of plant such as valves, which are subject to handling, shall be provided with an engraved chromium plated nameplate or label with engraving filled with enamel. The name plates for valves shall be marked in accordance with MSS standard SP-25 and ANSI B 16.34 as a minimum.
16.05.00	Hanger/ support numbers shall be marked on all pipe supports, anchors, hangers, snubbers and restraint assemblies. Each constant and variable spring support shall also have stamped upon it the designed hot and cold load which it is intended to support. Suitable scale shall also be provided to indicate load on support or hanger.
16.06.00	Valves, steam traps and strainers shall be identified by Employer's tag number of a metal tap permanently attached to non pressure parts such as the yoke by a stainless steel wire. The direction of flow shall also be marked on the body.
16.07.00	Safety and relief valves shall be provided with the following: a) Manufacturer's identification. b) Nominal inlet and outlet sizes in mm. c) Set pressure in Kg/cm^2 (abs). d) Blowdown and accumulation as percentage of set pressure. e) Certified capacity in Kg of saturated steam per hour or in case of liquid certified capacity in litres of water per minute.
16.08.00	All such plates, instruction plates, etc. shall be bilingual with Hindi inscription first, followed by English. Alternatively, two separate plates one with Hindi and the other with English inscriptions may be provided.
16.09.00	All segregated phases of conductors or bus ducts, indoor or outdoor, shall be provided with coloured phase plates to clearly identify the phase of the system.
17.00.00	**TOOLS AND TACKLES** The Contractor shall supply with the equipment one complete set of all special tools and tackles and other instruments required and other instruments for the erection, assembly, disassembly and proper maintenance of the plant and equipment and systems (including software). These special tools will also include special material handling equipment, jigs and fixtures for maintenance and calibration / readjustment,

checking and measurement aids etc. A list of such tools and tackles shall be submitted by the Bidder alongwith the offer.

The price of each tool / tackle shall be deemed to have been included in the total bid price. These tools and tackles shall be separately packed and sent to site. The Contractor shall also ensure that these tools and tackles are not used by him during erection, commissioning and initial operation. For this period the Contractor should bring his own tools and tackles. In case these tools and tackles are used by the Contractor during erection, commissioning or initial operation the same shall be refurbished repaired/replaced as required to the satisfaction of the Employer before handing over to the Employer. All the tools and tackles shall be of reputed make acceptable to the Employer.

18.00.00 **WELDING**

18.01.00 If the manufacturer has special requirements relating to the welding procedures for welds at the terminals of the equipments to be per formed by others the requirements shall be submitted to the Employer in advance of commencement of erection work.

19.00.00 **COLOUR CODE FOR ALL EQUIPMENTS/ PIPINGS/ PIPE SERVICES**

19.01.00 All equipment/ piping/ pipe services are to be painted by the Contractor in accordance with Employer's standard colour coding scheme, which will be furnished to the Contractor during detailed engineering stage.

20.00.00 **PROTECTION AND PRESERVATIVE SHOP COATING**

20.01.00 **PROTECTION**

All coated surfaces shall be protected against abrasion, impact, discoloration and any other damages. All exposed threaded portions shall be suitably protected with either metallic or a nonmetallic protection device. All ends of all valves and piping and conduit equipment connections shall be properly sealed with suitable devices to protect them from damage. The parts which are likely to get rusted, due to exposure to weather, should also be properly treated and protected in a suitable manner. All primers/paints/coatings shall take into account the hot humid, corrosive & alkaline, subsoil or over ground environment as the case may be. The requirements for painting specification shall be complied with as detailed out in Part-A & B of the Technical Specification.

20.02.00 **PRESERVATIVE SHOP COATING**

All exposed metallic surfaces subject to corrosion shall be protected by shop application of suitable coatings. All surfaces which will not be easily accessible after the shop assembly, shall be treated beforehand and protected for the life of the

equipment. All surfaces shall be thoroughly cleaned of all mill scales, oxides and other coatings and prepared in the shop. The surfaces that are to be finish-painted after installation or require corrosion protection until installation, shall be shop painted as per the requirements covered in the relevant part of the Technical Specification.

Transformers and other electrical equipments, if included shall be shop finished with one or more coats of primer and two coats of high grade resistance enamel. The finished colors shall be as per manufacturer's standards, to be selected and specified by the Employer at a later date.

20.03.00 Shop primer for all steel surfaces which will be exposed to operating temperature below 95 degrees Celsius shall be selected by the Contractor after obtaining specific approval of the Employer regarding the quality of primer proposed to be applied. Special high temperature primer shall be used on surfaces exposed to temperature higher than 95 degrees Celsius and such primer shall also be subject to the approval of the Employer.

20.04.00 All other steel surfaces which are not to be painted shall be coated with suitable dust preventive compound subject to the approval of the Employer.

20.05.00 All piping shall be cleaned after shop assembly by shot blasting or other means approved by the Employer. Lube oil piping or carbon steel shall be pickled.

20.06.00 Painting for Civil structures and equipment/system covered under this package shall be done as specified under technical requirements on civil works in relevant part of this specifications.

21.00.00 **QUALITY ASSURANCE PROGRAMME**

21.01.00 To ensure that the equipment and services under the scope of contract whether manufactured or performed within the Contractor's works or at his sub-contractor's premises or at the Employer's site or at any other place of work are in accordance with the specifications, the Contractor shall adopt suitable quality assurance programme to control such activities at all points, as necessary. Such programmes shall be outlined by the Contractor and shall be finally accepted by the Employer/authorised representative after discussions before the award of the contract. The QA programme shall be generally in line with ISO-9001/IS-14001. A quality assurance programme of the contractor shall generally cover the following:

a) His organisation structure for the management and implementation of the proposed quality assurance programme

b) Quality System Manual

c) Design Control System

d) Documentation Control System

e) Qualification data for Bidder's key Personnel.

f) The procedure for purchase of materials, parts, components and selection of sub-contractor's services including vendor analysis, source inspection, incoming raw-material inspection, verification of materials purchased etc.

g) System for shop manufacturing and site erection control including process controls and fabrication and assembly controls.

h) Control of non-conforming items and system for corrective actions.

i) Inspection and test procedure both for manufacture and field activities.

j) Control of calibration and testing of measuring testing equipments.

k) System for Quality Audits.

l) System for indication and appraisal of inspection status.

m) System for authorising release of manufactured product to the Employer.

n) System for handling storage and delivery.

o) System for maintenance of records, and

p) Furnishing of quality plans for manufacturing and field activities detailing out the specific quality control procedure adopted for controlling the quality characteristics relevant to each item of equipment/component as per formats enclosed as **Annexure-I** and **Annexure-II** respectively.

22.00.00 **GENERAL REQUIREMENTS - QUALITY ASSURANCE**

22.01.00 All materials, components and equipment covered under this specification shall be procured, manufactured, erected, commissioned and tested at all the stages, as per a comprehensive Quality Assurance Programme. An indicative programme of inspection/tests to be carried out by the contractor for some of the major items is given in the respective technical specification. This is, however, not intended to form a comprehensive programme as it is the contractor's responsibility to draw up and implement such programme duly approved by the Employer. The detailed Quality Plans for manufacturing and field activities shall be drawn up by the Bidder and will be submitted to Employer for approval. Schedule of finalisation of such quality plans will be finalised before award on enclosed format No. QS-01-QAI-P-1/F3-R0. Monthly progress reports shall be furnished.

CLAUSE NO.	GENERAL TECHNICAL REQUIREMENTS एनटीपीसी NTPC
22.02.00	Manufacturing Quality Plan will detail out for all the components and equipment, various tests/inspection, to be carried out as per the requirements of this specification and standards mentioned therein and quality practices and procedures followed by Contractor's/ Sub-contractor's/ sub-supplier's Quality Control Organisation, the relevant reference documents and standards, acceptance norms, inspection documents raised etc., during all stages of materials procurement, manufacture, assembly and final testing/performance testing. The Quality Plan shall be submitted on electronic media through C-folders, a web based system of NTPC ERP in addition to hard copy, for review and approval. After approval the same shall be submitted in compiled form on CD-ROM (As per format at Annexure-I)
22.03.00	Field Quality Plans will detail out for all the equipment, the quality practices and procedures etc. to be followed by the Contractor's "Site Quality Control Organisation", during various stages of site activities starting from receipt of materials/equipment at site (As per format at Annexure – II).
22.04.00	The Bidder shall also furnish copies of the reference documents/plant standards/acceptance norms/tests and inspection procedure etc., as referred in Quality Plans along with Quality Plans. These Quality Plans and reference documents/standards etc. will be subject to Employer's approval without which manufacturer shall not proceed. These approved documents shall form a part of the contract. In these approved Quality Plans, Employer shall identify customer hold points (CHP), i.e. test/checks which shall be carried out in presence of the Employer's Project Manager or his authorised representative and beyond which the work will not proceed without consent of Employer in writing. All deviations to this specification, approved quality plans and applicable standards must be documented and referred to Employer along with technical justification for approval and dispositioning.
22.05.00	The contractor shall submit to the Employer Field Welding Schedule for field welding activities in the format enclosed at **Annexure-V.** The field welding schedule shall be submitted to the Employer along with all supporting documents, like welding procedures, heat treatment procedures, NDT procedures etc. at least ninety days before schedule start of erection work at site.
22.06.00	The contractor shall have suitable Field Quality Organization with adequate manpower at Employer's site, to effectively implement the Field Quality Plan (FQP) and Field Quality Management System for site activities. The contractor shall submit the details of proposed FQA setup (organizational structure and manpower) for employer's approval. The FQA setup shall be in place at least one month before the start of site activities.
22.07.00	No material shall be despatched from the manufacturer's works before the same is accepted, subsequent to predespatch final inspection including verification of records of all previous tests/inspections by Employer's Project Manager/Authorised representative and duly authorised for despatch by issuance of Material Despatch

CLAUSE NO.	GENERAL TECHNICAL REQUIREMENTS
	Clearance Certificate (MDCC).
22.08.00	All material used for equipment manufacture including casting and forging etc. shall be of tested quality as per relevant codes/standards. Details of results of the tests conducted to determine the mechanical properties; chemical analysis and details of heat treatment procedure recommended and actually followed shall be recorded on certificates and time temperature chart. Tests shall be carried out as per applicable material standards and/or agreed details
22.09.00	All welding and brazing shall be carried out as per procedure drawn and qualified in accordance with requirements of ASME Section IX/BS-4870 or other International equivalent standard acceptable to the Employer. All welding/brazing procedures shall be submitted to the Employer or its authorised representative for approval prior to carrying out the welding/brazing.
22.10.00	All brazers, welders and welding operators employed on any part of the contract either in Contractor's/his sub-contractor's works or at site or elsewhere shall be qualified as per ASME Section-IX or BS-4871 or other equivalent International Standards acceptable to the Employer.
22.11.00	Welding procedure qualification & Welder qualification test results shall be furnished to the Employer for approval. However, where required by the Employer, tests shall be conducted in presence of Employer/authorized representative.
22.12.00	For all IBR pressure parts and high pressure piping welding, the latest applicable requirements of the IBR (Indian Boiler Regulations) shall also be essentially complied with. However, other piping system ASME B31.1 or other relevant code as applicable shall be followed. Similarly, any other statutory requirements for the equipment/systems shall also be complied with. On all back-gauged welds MPI/LPI shall be carried before seal welding
22.13.00	All the heat treatment results shall be recorded on time temperature charts and verified with recommended regimes.
22.14.00	No welding shall be carried out on cast iron components for repair.
22.15.00	Unless otherwise proven and specifically agreed with the Employer, welding of dissimilar materials and high alloy materials shall be carried out at shop only.
22.16.00	All non-destructive examination shall be performed in accordance with written procedures as per International Standards. The NDT operator shall be qualified as per SNT-TC-IA (of the American Society of non-destructive examination) or equivalent. NDT shall be recorded in a report, which includes details of methods and equipment used, result/evaluation, job data and identification of personnel employed and details of co-relation of the test report with the job.

CLAUSE NO.	GENERAL TECHNICAL REQUIREMENTS
	In general all plates of thickness greater than 40mm & for pressure parts plates of thickness equal to or greater than 25mm shall be ultrasonically tested otherwise as specified in respective equipment specification. All bar stock/Forging of diameter equal to or greater than 40 mm shall be ultrasonically tested.
22.17.00	The Contractor shall list out all major items/ equipment/ components to be manufactured in house as well as procured from sub-contractors (BOI). All the sub-contractor proposed by the Contractor for procurement of major bought out items including castings, forging, semi-finished and finished components/equipment etc., list of which shall be drawn up by the Contractor and finalised with the Employer, shall be subject to Employer's approval on enclosed format No. QS-01-QAI-P-01/F3. The contractor's proposal shall include vendor's facilities established at the respective works, the process capability, process stabilization, QC systems followed, experience list, etc. along with his own technical evaluation for identified sub-contractors enclosed and shall be submitted to the Employer for approval within the period agreed at the time of pre-awards discussion and identified in "DR" category prior to any procurement. Monthly progress reports on sub-contractor detail submission / approval shall be furnished preferably on enclosed format at **Annexure-IV.** Such vendor approval shall not relieve the contractor from any obligation, duty or responsibility under the contract.
22.18.00	For components/equipment procured by the contractors for the purpose of the contract, after obtaining the written approval of the Employer, the contractor's purchase specifications and inquiries shall call for quality plans to be submitted by the suppliers. The quality plans called for from the sub-contractor shall set out, during the various stages of manufacture and installation, the quality practices and procedures followed by the vendor's quality control organisation, the relevant reference documents/standards used, acceptance level, inspection of documentation raised, etc. Such quality plans of the successful vendors shall be finalised with the Employer and such approved Quality Plans shall form a part of the purchase order/contract between the Contractor and sub-contractor. With in three weeks of the release of the purchase orders /contracts for such bought out items /components, a copy of the same without price details but together with the detailed purchase specifications, quality plans and delivery conditions shall be furnished to the Employer on the monthly basis by the Contractor along with a report of the Purchase Order placed so far for the contract.
22.19.00	Employer reserves the right to carry out quality audit and quality surveillance of the systems and procedures of the Contractor's or their sub-contractor's quality management and control activities. The contractor shall provide all necessary assistance to enable the Employer carry out such audit and surveillance.
22.20.00	The contractor shall carry out an inspection and testing programme during manufacture in his work and that of his sub-contractor's and at site to ensure the

mechanical accuracy of components, compliance with drawings, conformance to functional and performance requirements, identity and acceptability of all materials parts and equipment. Contractor shall carry out all tests/inspection required to establish that the items/equipment conform to requirements of the specification and the relevant codes/standards specified in the specification, in addition to carrying out tests as per the approved quality plan.

22.21.00 Quality audit/surveillance/approval of the results of the tests and inspection will not, however, prejudice the right of the Employer to reject the equipment if it does not comply with the specification when erected or does not give complete satisfaction in service and the above shall in no way limit the liabilities and responsibilities of the Contractor in ensuring complete conformance of the materials/equipment supplied to relevant specification, standard, data sheets, drawings, etc.

22.22.00 For all spares and replacement items, the quality requirements as agreed for the main equipment supply shall be applicable.

22.23.00 Repair/rectification procedures to be adopted to make the job acceptable shall be subject to the approval of the Employer/ authorised representative.

22.24.00 **Environmental Stress Screening**

All solid state electronic system / equipment / sub assembly shall be free from infant mortile components. For establishing the compliance to this requirement, the contractor / sub – contractor should meet the following.

1) The Contractor / Sub – contractor shall furnish the established procedure being followed for eliminating infant mortile components. The procedure followed by the Contractor / Sub – contractor should be substantiated along with the statistical figures to validate the procedure being followed. The necessary details as required under this clause shall be furnished at the stage of QP finalization.

Or

In case the Contractor / Sub – contractor do not have any established procedure to eliminate infant mortile components then two or 10% whichever is less, most densely populated Panels shall be tested for Elevated Temperature Cycle Test as per the following procedure.

Elevated Temperature Test Cycle

During the elevated temperature test which shall be for 48 hours, the ambient temperature shall be maintained at 50° C. The equipment shall be interconnected with devices and kept under energized conditions so as to repeatedly perform all operations it is expected to perform in actual service

CLAUSE NO.	GENERAL TECHNICAL REQUIREMENTS

with load on various components being equal to those which will be experienced in actual service.

During the elevated temperature test the cubicle doors shall be closed (or shall be in the position same as they are supposed to be in the field) and inside temperature in the zone of highest heat dissipating components / modules shall be monitored. The temperature rise inside the cubicle should not exceed 10° C above the ambient temperature at 50° C.

In case of any failure during the test cycle, the further course of action should be mutually discussed for demonstrating the intent of the above requirement.

2) **Burn in Test Cycle**

The test shall be conducted on all the panels fully assembled and wired including the panels having undergone the above mentioned elevated temperature test.

The period of Burn in Test Cycle shall be 120 hrs and process shall be similar to the elevated temperature test as above except that the temperature shall be reduced to the ambient temperature prevalent at that time.

During the above tests, the process I/O and other load on the system shall be simulated by simulated inputs and in the case of control systems; the process which is to be controlled shall also be simulated. Testing of individual components or modules shall not be acceptable.

During the Burn in Test the cubicle doors shall be closed (or shall be in the position same as they are supposed to be in the field) and inside temperature in the zone of highest heat dissipating components / modules shall be monitored. The temperature rise inside the cubicle should not exceed 10° C above the ambient temperature.

22.25.00 The Contractor / Sub-contractor shall carry out routine test on 100% item at contractor / sub-contractor's works. The quantum of check / test for routine & acceptance test by employer shall be generally as per criteria / sampling plan defined in referred standards. Wherever standards have not been mentioned quantum of check / test for routine / acceptance test shall be as agreed during detailed engineering stage.

23.00.00 **QUALITY ASSURANCE DOCUMENTS**

23.01.00 The Contractor shall be required to submit the QA Documentation in two hard copies and two CD ROMs, as identified in respective quality plan with tick (✓)mark.

Bharat Heavy Electricals Ltd. Power Sector Marketing
NAVABAGH POWER GENERATING CO. PVT. LTD. NPGC

CLAUSE NO.	GENERAL TECHNICAL REQUIREMENTS
23.01.01	Each QA Documentation shall have a project specific Cover Sheet bearing name & identification number of equipment and including an index of its contents with page control on each document. The QA Documentation file shall be progressively completed by the Supplier's sub-supplier to allow regular reviews by all parties during the manufacturing. The final quality document will be compiled and issued at the final assembly place of equipment before despatch. However CD-Rom may be issued not later than three weeks.
23.02.00	Typical contents of QA Documentation is as below:- (a.) Quality Plan (b.) Material mill test reports on components as specified by the specification and approved Quality Plans. (c.) Manufacturer / works test reports/results for testing required as per applicable codes and standard referred in the specification and approved Quality Plans. (d.) Non-destructive examination results /reports including radiography interpretation reports. Sketches/drawings used for indicating the method of traceability of the radiographs to the location on the equipment. (e.) Heat Treatment Certificate/Record (Time- temperature Chart) (f.) All the accepted Non-conformance Reports (Major/Minor)/deviation, including complete technical details / repair procedure). (g.) CHP / Inspection reports duly signed by the Inspector of the Employer and Contractor for the agreed Customer Hold Points. (h.) Certificate of Conformance (COC) wherever applicable. (i.) MDCC
23.03.00	Similarly, the contractor shall be required to submit two sets (two hard copies and two CD ROMs), containing QA Documentation pertaining to field activities as per Approved Field Quality Plans and other agreed manuals/ procedures, prior to commissioning of individual system.
23.04.00	Before despatch / commissioning of any equipment, the Supplier shall make sure that the corresponding quality document or in the case of protracted phased deliveries, the applicable section of the quality document file is completed. The

CLAUSE NO.	GENERAL TECHNICAL REQUIREMENTS
	supplier will then notify the Inspector regarding the readiness of the quality document (or applicable section) for review. (a.) If the result of the review carried out by the Inspector is satisfactory, the Inspector shall stamp the quality document (or applicable section) for release. (b.) If the quality document is unsatisfactory, the Supplier shall endeavor to correct the incompleteness, thus allowing to finalize the quality document (or applicable section) by time compatible with the requirements as per contract documents. When it is done, the quality document (or applicable section) is stamped by the Inspector. (c.) If a decision is made for despatch, whereas all outstanding actions cannot be readily cleared for the release of the quality document by that time, the supplier shall immediately, upon shipment of the equipment, send a copy of the quality document Review Status signed by the Supplier Representative to the Inspector and notify of the committed date for the completion of all outstanding actions & submission. The Inspector shall stamp the quality document for applicable section when it is effectively completed. The submission of QA documentation package shall not be later than 3 weeks after the despatch of equipment.
23.05.00	**TRANSMISSION OF QA DOCUMENTATION** On release of QA Documentation by Inspector, one set of quality document shall be forwarded to Corporate Quality Assurance Department and other set to respective Project Site of Employer. For the particular case of phased deliveries, the complete quality document to the Employer shall be issued not later than 3 weeks after the date of the last delivery of equipment.
24.00.00	**PROJECT MANAGER'S SUPERVISION**
24.01.00	To eliminate delays and avoid disputes and litigation, it is agreed between the parties to the Contract that all matters and questions shall be referred to the Project Manager and without prejudice to the provisions of 'Arbitration' clause in Section GCC, the Contractor shall proceed to comply with the Project Manager's decision.
24.02.00	The work shall be performed under the supervision of the Project Manager. The scope of the duties of the Project Manager pursuant to the Contract, will include but not be limited to the following:

CLAUSE NO.	GENERAL TECHNICAL REQUIREMENTS
	(a.) Interpretation of all the terms and conditions of these documents and specifications (b.) Review and interpretation of all the Contractor's drawing, engineering data, etc (c.) Witness or his authorised representative to witness tests and trials either at the manufacturer's works or at site, or at any place where work is performed under the contract (d.) Inspect, accept or reject any equipment, material and work under the contract (e.) Issue certificate of acceptance and/or progressive payment and final payment certificates (f.) Review and suggest modifications and improvement in completion schedules from time to time, and (g.) Supervise Quality Assurance Programme implementation at all stages of the works.
25.00.00	**INSPECTION, TESTING AND INSPECTION CERTIFICATES**
25.01.00	The word 'Inspector' shall mean the Project Manager and/or his authorised representative and/or an outside inspection agency acting on behalf of the Employer to inspect and examine the materials and workmanship of the works during its manufacture or erection.
25.02.00	The Project Manager or his duly authorised representative and/or an outside inspection agency acting on behalf of the Employer shall have access at all reasonable times to inspect and examine the materials and workmanship of the works during its manufacture or erection and if part of the works is being manufactured or assembled on other premises or works, the Contractor shall obtain for the Project Manager and for his duly authorised representative permission to inspect as if the works were manufactured or assembled on the Contractor's own premises or works.
25.03.00	The Contractor shall give the Project Manager/Inspector fifteen (15) days written notice of any material being ready for testing. Such tests shall be to the Contractor's account except for the expenses of the Inspector's. The Project Manager/Inspector, unless the witnessing of the tests is virtually waived and confirmed in writing, will attend such tests within fifteen (15) days of the date on which the equipment is noticed as being ready for test/inspection failing which the contractor may proceed with test which shall be deemed to have been made in the inspector's presence and he shall forthwith forward to the inspector duly certified copies of test reports in two

CLAUSE NO.	GENERAL TECHNICAL REQUIREMENTS
	(2) copies.
25.04.00	The Project Manager or Inspector shall within fifteen (15) days from the date of inspection as defined herein give notice in writing to the Contractor, or any objection to any drawings and all or any equipment and workmanship which is in his opinion not in accordance with the contract. The Contractor shall give due consideration to such objections and shall either make modifications that may be necessary to meet the said objections or shall inform in writing to the Project Manager/Inspector giving reasons therein, that no modifications are necessary to comply with the contract.
25.05.00	When the factory tests have been completed at the Contractor's or sub-contractor's works, the Project Manager /Inspector shall issue a certificate to this effect fifteen (15) days after completion of tests but if the tests are not witnessed by the Project Manager /Inspectors, the certificate shall be issued within fifteen (15) days of the receipt of the Contractor's test certificate by the Project Manager /Inspector. Project Manager /Inspector to issue such a certificate shall not prevent the Contractor from proceeding with the works. The completion of these tests or the issue of the certificates shall not bind the Employer to accept the equipment should it, on further tests after erection be found not to comply with the contract.
25.06.00	In all cases where the contract provides for tests whether at the premises or works of the Contractor or any sub-contractor, the Contractor, except where otherwise specified shall provide free of charge such items as labour, material, electricity, fuel, water, stores, apparatus and instruments as may be reasonably demanded by the Project Manager /Inspector or his authorised representatives to carry out effectively such tests on the equipment in accordance with the Contractor and shall give facilities to the Project Manager/Inspector or to his authorised representative to accomplish testing.
25.07.00	The inspection by Project Manager / Inspector and issue of Inspection Certificate thereon shall in no way limit the liabilities and responsibilities of the Contractor in respect of the agreed Quality Assurance Programme forming a part of the contract.
25.08.00	To facilitate advance planning of inspection in addition to giving inspection notice as specified at clause no 25.03.00 of this chapter, the Contractor shall furnish quarterly inspection programme indicating schedule dates of inspection at Customer Hold Point and final inspection stages. Updated quarterly inspection plans will be made for each three consecutive months and shall be furnished before beginning of each calendar month.
25.09.00	All inspection, measuring and test equipment used by contractor shall be calibrated periodically depending on its use and criticality of the test/measurement to be done. The Contractor shall maintain all the relevant records of periodic calibration and instrument identification, and shall produce the same for inspection by NTPC. Wherever asked specifically, the contractor shall re-calibrate the measuring/test equipment in the presence of Project Manager / Inspector.

CLAUSE NO.	GENERAL TECHNICAL REQUIREMENTS
25.10.00	**Associated document for Quality Assurance programme**
25.10.01	Manufacturing Quality Plan Format No. : QS-01-QAI-P-09/F1-R1 enclosed at **Annexure-I.**
25.10.02	Field Quality Plan Format No.: QS-01-QAI-P-09/F2-R1 enclosed at **Annexure-II.**
25.10.03	List of items requiring quality plan and sub supplier approval. Format No.: QS-01-QAI-P-01/F3-R0 **(Annexure-III).**
25.10.04	Status of items requiring Quality Plan and sub supplier approval. Format enclosed at **Annexure-IV.**
25.10.05	Field Welding Schedule Format enclosed at **Annexure-V.**
25.11.00	**Not Used**
25.12.00	**DEMONSTRATION OF APPLICATION ENGINEERING**
25.12.01	Based on NTPC inputs, the Contractor shall prepare and submit typical implemented scheme in their system (Control system & HMI) on sample basis. The typical cases to be covered shall include but not be limited to the following. (i) Logics/Loops: a) Drive logics implementation for each type of binary drive along with its display in HMI. b) Sequence implementation along with its display in HMI. c) Single non-cascade controller implementation. d) Cascade loop implementation. e) Master slave implementation with different slave combination. f) Temperature & pressure compensation for flow signals & pressure compensation for level signals as applicable. (ii) HMI Functions: a) LVS Annunciation. b) Graphics. c) HSR d) Logs/Reports.

CLAUSE NO.	GENERAL TECHNICAL REQUIREMENTS
	e) Calculations (Basic & Performance Calculations).
25.12.02	The above typical cases shall be finalized with the Employer through Technical Co-ordination meetings. After review and finalization of the typical cases, the implementation of each logic & control loop shall be carried out by the Contractor based on NTPC inputs. After implementation of these logics & loops, the Contractor shall test each logic /loop and record the observations in a format to be provided by the Employer and demonstrate to Employer at Employer premises during engineering finalization. Any modifications as a result of the demonstration shall be done and documented as part of the test report along with the final scheme. Similarly, HMI functions shall also be demonstrated by the Contractor at Employer premises & the results shall be documented as part of test report.
25.12.03	During the integrated testing at the Contractor's works, only sample checks shall be done by the Employer for the items covered in above application engineering demonstration.
26.00.00	**PRE-COMMISSIONING AND COMMISSIONING FACILITIES**
26.01.00	(a) As soon as the facilities or part thereof has been completed operationally and structurally and before start-up, each item of the equipment and systems forming part of facilities shall be thoroughly cleaned and then inspected jointly by the Employer and the Contractor for correctness of and completeness of facility or part thereof and acceptability for initial pre-commissioning tests, commissioning and start-up at Site. The list of pre-commissioning tests to be performed shall be as mutually agreed and included in the Contractor's quality assurance programme as well as those included in Part-D, Section-VI and elsewhere in the Technical Specifications. (b) The Contractor's pre-commissioning/ commissioning/start-up engineers, specially identified as far as possible, shall be responsible for carrying out all the pre-commissioning tests at Site. On completion of inspection, checking and after the pre-commissioning tests are satisfactorily over, the commissioning of the complete facilities shall be commenced during which period the complete facilities, equipments shall be operated integral with sub-systems and supporting equipment as a complete plant. (c) All piping system shall be flushed, steam blown, air blown as required and cleanliness demonstrated using acceptable industry standards. Procedures to accomplish this work shall be submitted for approval to the Employer six months prior to the respective implementations. The Employer will approve final verification of cleanliness.

CLAUSE NO.	GENERAL TECHNICAL REQUIREMENTS	एनटीपीसी NTPC

(d) The time consumed in the inspection and checking of the units shall be considered as a part of the erection and installation period.

(e) The check outs during the pre - commissioning period should be programmed to follow the construction completion schedule. Each equipment/system, as it is completed in construction and turned over to Employer's commissioning (start-up) Engineer(s), should be checked out and cleaned. The checking and inspection of individual systems should then follow a prescribed commissioning documentation [SLs(standard check list)/TS(testing schedule)/CS(commissioning schedule)] approved by the employer.

(f) The Contractor during initial operation and performance testing shall conduct vibration testing to determine the 'base line' of performance of all plant rotating equipment. These tests shall be conducted when the equipment is running at the base load, peak load as well as lowest sustained operating condition as far as practicable.

26.01.00 Contractor shall furnish the commissioning organization chart for review & acceptance of employer at least eighteen months prior to the schedule date of synchronization of 1st unit. The chart should contain:

(1.) Biodata including experience of the Commissioning Engineers.

(2.) Role and responsibilities of the Commissioning Organisation members.

(3.) Expected duration of posting of the above Commissioning Engineers at site.

26.02.00 **Initial Operation**

(a) On completion of all pre-commissioning activities/ tests and as a part of commissioning the complete facilities shall be put on 'Initial Operation' during which period all necessary adjustments shall be made while operating over the full load range enabling the facilities to be made ready for the Guarantee Tests.

(b) The 'Initial Operation' of the complete facility as an integral unit shall be conducted for 720 continuous hours. During the period of initial operation of 720 hours, the FGD System shall operate continuously at full load for a period not less than 72 hours.

The Initial Operation shall be considered successful, provided that each item/ part of the facility can operate continuously at the specified operating characteristics, for the period of Initial Operation with all operating parameters within the specified limits and at or near the predicted performance of the equipment/ facility.

NABINAGAR POWER GENERATING CO. PVT. LTD. NPGC

The Contractor shall intimate the Employer about the commencement of initial operation and shall furnish adequate notice to the Employer in this respect.

(c) Any loss of generation due to constraints attributable to the Employer shall be construed as Deemed Generation.

(d) An Initial Operation report comprising of observations and recordings of various parameters to be measured in respect of the above Initial Operation shall be prepared by the Contractor. This report, besides recording the details of the various observations during initial operation shall also include the dates of start and finish of the Initial Operation and shall be signed by the representatives of both the parties. The report shall have sheets, recording all the details of interruptions occurred, adjustments made and any minor repairs done during the Initial Operation. Based on the observations, necessary modifications/repairs to the plant shall be carried out by the Contractor to the full satisfaction of the Employer to enable the latter to accord permission to carry out the Guarantee tests on the facilities. However, minor defects which do not endanger the safe operation of the equipment, shall not be considered as reasons for with- holding the aforesaid permission.

26.03.00 **Guarantee Tests**

a) The final test as to prove the Functional Guarantees shall be conducted at Site by the Contractor in presence of the Employer. The contractor's Commissioning, start-up and initial operation shall make the unit ready to conduct such test. Such test will be commenced, within a period of **three (3) months** after the successful completion of Initial Operations. Any extension of time beyond the above **three (3) months** shall be mutually agreed upon.

b) These tests shall be binding on both the parties of the Contract to determine compliance of the equipment with the functional guarantee.

c) For performance/ demonstration tests instrumentations, of accuracy class shall be as per specified test codes. The numbers and location of the instruments shall be as per the specified test codes. In addition the values of parameters shall be logged from the information system provided under Employer's Distributed Digital Control Monitoring and Information system. Test will be conducted at specified load points.

d) Any special equipment, tools and tackles required for the successful completion of the Guarantee Tests shall be provided by the Contractor, free of cost.

CLAUSE NO.	GENERAL TECHNICAL REQUIREMENTS
	e) The Guarantee tests and specific tests to be conducted on equipments have been brought out in detail elsewhere in the specifications.
27.00.00	**TAKING OVER**
	Upon successful completion of Initial Operations and all the tests conducted to the Employer's satisfaction, the Employer shall issue to the Contractor a Taking over Certificate as a proof of the final acceptance of the equipment. Such certificate shall not unreasonably be with held nor will the Employer delay the issuance thereof, on account of minor omissions or defects which do not affect the commercial operation and/or cause any serious risk to the equipment. Such certificate shall not relieve the Contractor of any of his obligations which otherwise survive, by the terms and conditions of the Contract after issuance of such certificate.
28.00.00	**TRAINING OF EMPLOYER'S PERSONNEL**
28.01.00	**Training for Employers O&M Personnel**
	The scope of service under training of Employer's engineers shall include a training module ~~covering upto six (6) man months~~ in the areas of Operation & Maintenance.
	Such training should enable the personnel to individually take the responsibility of operating and maintaining the FGD system in a manner acceptable to the Employer.
28.02.00	**Training for Employers Engineering Personnel**
	The scope of services under training for Employer's engineering personnel ~~shall also necessarily include two (2) manmonth.~~ This shall cover all disciplines viz, Mechanical, Electrical, C&I, & QA etc. and shall include all the related areas like Design familiarization, training on product design features and product design softwares of major equipment and systems, engineering, manufacturing, erection, commissioning, training on operating features of equipment, quality assurance and testing, plant visits and visits to manufacturer's works, exposure to various kinds of problems which may be encountered in fabrication, manufacturing, erection, welding etc. An indicative module of the training requirement of Employer's Engineering personnel is attached as Annexure-VII.
28.03.00	Bidder shall furnish in his offer, details of training module(s) covering above requirements which shall be subject to Employer's approval. ~~Consolidated training period included above (i.e. 6 man months (7 man months in case of projects where ZLD system is included in scope) and 3 man months (4 man months in case of projects where ZLD system is included in scope) respectively for O&M and~~

CLAUSE NO.	GENERAL TECHNICAL REQUIREMENTS
	~~Engineering) is indicative only~~. Employer reserves the right to re appropriate the training period between O&M and engineering depending upon the details of training module proposed by the Bidder.
28.04.00	Exact details, extent of training and the training schedule shall be finalised based on the Bidder's proposal within two (2) months from placement of award.
28.05.00	In all the above cases, wherever the training of Employer's personnel is arranged at the works of the manufacturer's it shall be noted that the lodging and boarding of the Employer's personnel shall be at the cost of Contractor. The Contractor shall make all necessary arrangements towards the same.
28.06.00	Take off prices (product wise) should be indicated by the Bidder in the Bid Proposal Sheets. Employer reserves the right to include or exclude these item(s) during placement of Award.
	~~**Note**: For training purposes, one (1) man month implies 30 working days (excluding all intervening holidays) per person.~~
29.00.00	**SAFETY ASPECTS DURING CONSTRUCTION AND ERECTION**
	In addition to the requirements given in Erection Conditions of Contract (ECC) the following shall also cover:
	i) Working platforms should be fenced and shall have means of access.
	ii) Ladders in accordance with Employer's safety rules for construction and erection shall be used. Rungs shall not be welded on columns. All the stairs shall be provided with handrails immediately after its erection.
30.00.00	**NOISE LEVEL**
	The equivalent 'A' weighted sound pressure level measured at a height of 1.5 m above floor level in elevation and at a distance of one (1) metre horizontally from the nearest surface of any equipment/machine, furnished and installed under these specifications, expressed in decibels to a reference of 0.0002 microbar, shall not exceed 85 dBA . However for Ball Mills the noise levels as per following shall also be acceptable:
	a) Ball Mill < 90 dBA
31.00.00	**PACKAGING AND TRANSPORTATION**
	All the equipments shall be suitably protected, coated, covered or boxed and crated to prevent damage or deterioration during transit, handling and storage at Site till the

time of erection. While packing all the materials, the limitation from the point of view of the sizes of railway wagons available in India should be taken account of. The Contractor shall be responsible for any loss or damage during transportation, handling and storage due to improper packing. The Contractor shall ascertain the availability of Railway wagon sizes from the Indian Railways or any other agency concerned in India well before effecting despatch of equipment. Before despatch it shall be ensured that complete processing and manufacturing of the components is carried out at shop, only restricted by transport limitation, in order to ensure that site works like grinding, welding, cutting & preassembly to bare minimum. The Employer's Inspector shall have right to insist for completion of works in shops before despatch of materials for transportation.

32.00.00 **ELECTRICAL EQUIPMENTS/ENCLOSURES**

32.01.00 All electrical equipments and devices, including insulation, heating and ventilation devices shall be designed for ambient temperature and a maximum relative humidity as specified elsewhere in the specifications.

33.00.00 **INSTRUMENTATION AND CONTROL**

All instrumentation and control systems/ equipment/ devices/ components, furnished under this contract shall be in accordance with the requirements stated herein, unless otherwise specified in the detailed specifications.

33.01.00 All instrument scales and charts shall be calibrated and printed in metric units and shall have linear graduation. The ranges shall be selected to have the normal reading at 75% of full scale.

All scales and charts shall be calibrated and printed in Metric Units as follows:

1 Temperature	-	Degree centigrade (deg C)
2. Pressure	-	Kilograms per square centimetre (Kg/cm^2). Pressure instrument shall have the unit suffixed with 'a' to indicate absolute pressure. If nothing is there, that will mean that the indicated pressure is gauge pressure.
3. Draught	-	Millimetres of water column (mm wc).
4. Vacuum	-	Millimeters of mercury gauge (mm Hg) or water column (mm Wcl).
5. Flow (Gas)	-	Tonnes/ hour

CLAUSE NO.	GENERAL TECHNICAL REQUIREMENTS
	6. Flow (Steam) - Tonnes/ hour 7. Flow (Liquid) - Tonnes / hour 8. Flow base - 760 mm Hg. 0 deg.C 9. Density - Grams per cubic centimeter.
33.02.00	All instruments and control devices provided on panels shall be of miniaturized design, suitable for modular flush mounting on panels with front draw out facility and flexible plan-in connection at rear.
33.03.00	All electronic modules shall have gold plated connector fingers and further all input and output modules shall be short circuit proof. These shall also be tropicalised & components shall be of industrial grade or better.
34.00.00	**ELECTRICAL NOISE CONTROL** The equipment furnished by the Contractor shall incorporate necessary techniques to eliminate measurement and control problems caused by electrical noise. Areas in Contractor's equipment which are vulnerable to electrical noise shall be hardened to eliminate possible problems. Any additional equipment, services required for effectively eliminating the noise problems shall be included in the proposal. The equipment shall be protected against ESD as per IEC-61000-2. Radio Frequency interference (RFI) and Electro Magnetic Interference (EMI) protection against hardware damage and control system mal-operations/errors shall be provided for all systems as per EN-50082-2 (1995).
35.00.00	**SURGE PROTECTION FOR SOLID STATE EQUIPMENT** All solid state systems /equipment shall be able to withstand the electrical noise and surge as encountered in actual service conditions and inherent in a power plant and shall meet the requirements of surge protection as defined in ANSI C37.90.1-1989 on its suitable equivalent class of IEC 254-4. Details of the features incorporated and relevant tests carried out. The test certificates. etc. shall be submitted by the Bidder.
36.00.00	**INSTRUMENT AIR SYSTEM** The instrument air supply system as supplied by the Bidder for various pneumatic control & instrumentation devices like pneumatic actuators, power cylinders, E/P converters, piping / tubing etc. Each pneumatic instrument shall have an individual air shut - off valve. The pressure regulating valve shall be equipped with an internal filter, a 50 mm pressure gauge and a built-in filter housing blow down valve.

CLAUSE NO.	GENERAL TECHNICAL REQUIREMENTS
37.00.00	**TAPPING POINTS FOR MEASUREMENTS** Tapping points shall include probes, wherever applicable, for analytical measurements and sampling. For direct temperature measurement of all working media, one stub with internal threading of approved pattern shall be provided along with suitable plug and washer. The Contractor will be intimated about thread standard to be adopted. The following shall be provided on equipment by the Bidder. The standard which is to be adopted, will be intimated to the Contractor. i) Temperature test pockets with stub and thermowell ii) Pressure test pockets
38.00.00	**SYSTEM DOCUMENTATION** The Bidder shall provide drawings, system overview & description, hardware/ software details, technical literature, functional & hardware schemes, bill of material, parts list, interconnection diagrams, data sheets, erection/ installation/ commissioning procedures, instruction/ operating manuals, etc. for each of the C& I system / sub-systems/ equipment supplied under this package. The documentation shall include complete details of the C&I systems/ sub-systems/ equipment to enable review by Employer during detailed engineering stage and to provide information to plant personnel for operation & Maintenance (including quick diagnostics & trouble shooting) of these C&I systems/ sub-systems/ equipment at site. The minimum documentation requirements for C&I systems shall be as stipulated under C&I "Techncial Data Sheets" Part of specifications. In addition to this, system documentation for control system shall include as a minimum to that specified elsewhere in the Technical Specification. The exact format, submission schedule and contents of various documents shall be as finalised during detailed engineering stage.
38.01.00	Bill of material (instrument list) for all C&I equipment/ devices shall be furnished by the bidder in standard formats as approved by the Employer.
39.00.00	**MAINTENANCE MANUALS OF ELECTRONIC MODULES** The Contractor shall have to furnish two (2) sets of all maintenance manual of each and every electronic card/module as employed on the various systems and equipment including peripherals etc., offered by him. The Contractor will also have to furnish the data regarding the expected failure rate of various modules and other system components. Further , the contractor shall furnish a set of operating manuals which should include block diagrams ,make, model/type ,details wiring and external

CLAUSE NO.	GENERAL TECHNICAL REQUIREMENTS
	connection drawings etc as required to do the testing and maintenance of the electronic modules.

CLAUSE NO.	GENERAL TECHNICAL REQUIREMENTS		

LIST OF CODES AND STANDARDS

Indian Standards	Title	International and Internationally recognised standards
IS:277	Galvanised steel sheets (plain or corrugated)	
IS:655	Specification for metal air duct	
IS:800	Code of practice for use of structural steel in general building construction	BS 449:1969 BS 5950 ASA A57, 1-1952
IS:807	Code of practice for design, manufacture, erection and testing (Structural portion) of cranes and hoists 6588 (Issued by Standards Association of Australia). DIN 120:1936 (Sheet 1) DIN 120:1936 (Sheet 2) 327 part-I, 1951 BS 466 part-II, 1960 BS 644:1960 BS 1757:1951 BS 2573:part-I:1960	Draft Revision of A.S. NO. CS.2 SAA Crane and Hoist code Doc:No. BU/4 Rev
IS:875	Code of practice for design loads (other than earthquake) for buildings and structures Leading standards (issued by Canadian Standard) DIN-1055-1955 (Issued by ASA)	National Building code of Canada (1953)-Part-IV Design section 4.1

CLAUSE NO.	GENERAL TECHNICAL REQUIREMENTS		
	IS:1239 Part-I	Mild steel tubes	(ISO/R 65-1957) (ISO/R-64-1958) (ISO/R-65-1958) (BS 1387 : 1957)
	IS:1239 Part-II	Mild steel tubulars and other wrought steel pipe fittings	BS 1387 : 1967 BS 1387 :1967 BS 1740 :1965
	IS:2825	Code for unfired vessels	
	IS:1520	Horizontal centrifugal pumps for clear cold and fresh water	
	IS:1600	Code for practice for performance of constant speed IC Engines for general purpose	
	IS:1601	Specification for perform-ance of constant speed IC Engines for general Purpose	
	IS:1893	Criteria for earthquake resistant design of structures	
	IS1978-1971	Line Pipe April 1969.	API Standards 5L
	IS:2254-1970	Dimensions of vertical shaft motor for pumps	IEC Pub 72-1 part I NEMA Pub MG 1 1954
	IS:2266	Steel wire ropes for general engineering purposes	BS :302 : 1968
	IS:2312	Propellant type Ventilation fans	
	IS:2365	Steel wire suspension ropes for lifts and hoists	BS : 1957

CLAUSE NO.	GENERAL TECHNICAL REQUIREMENTS		
	IS:3346	Method for the determination of thermal conductivity of thermal insulation materials (two slab guarded hot plate method)	DIN 52612 (Deutscher Normenausschuss) ASTM C 163-1964 (American Society of Testing and materials) ASTM C 167-1974 ASTM C 177-1963
	IS:3354	Outline dimensions for electric lifts.	
	IS:3401	Silica gel	
	IS:3588	Specification for electrical axial flow fans	
	IS:3589	Electrically welded steel pipes for water, gas and sewage (200mm to 2000 mm Nominal Diametre)	
	IS:3677	Unbonded rock and slag wool for thermal insulation	
	IS:3815	Point hook with shank for general engineering purposes	BS 482 - 1968 Doc.:67/3 1284 (Revision of BS 2903) (Issued BS)
	IS:3895	Specification for monocrystallines semiconductor rectifier cells and stacks	
	IS:3963	Roof extractor unit	
	IS:3975	Mild steel wires, strips and tapes for armouring cables	
	IS:4503	Shell and tube type heat Exchanger	

CLAUSE NO.	GENERAL TECHNICAL REQUIREMENTS		
	IS:4540	Specification for monory-stallines rectifire assembly equipment	
	IS:4671	Expanded polystyrene for thermal insulation purpose	
	IS:4736	Hot dip zinc coating on steel tubes	
	IS:4894	Centrifugal fans	
	IS:5456	Code of practice for testing of positive displacement type air compressors and exhauster (For Test Tolerance Only)	
	IS:5749	Forged ramshorn hooks	Entwurf DIN 15402 Blett 1 Entwurf DIN 15402 BS 3017-1958
	IS:6392	Steel pipe flanges	BS 4504 : 1969
	IS:6524 Part-I	Code of practice for design of tower cranes Static and rail mounted	BS 2799 : 1956
	IS:7098	Cross linked Polyethylene insulated PVC sheathed cables	Standard No. 1 to IPCEA (USA) Pub. No. 5-66-524
	IS:7373	Specification for wrought aluminium and aluminium sheet and strips	
	IS:7938	Air receivers for compressed air installation	
	ISO:1217	Displacement compressor-Acceplance test	
	ASHRAE-33 and air heating coils.	Methods of testing for rating of forced circulation air cooling	
	ASHRAE-52-76 particle matter.	Air cleaning device used in general ventilation for removing	

CLAUSE NO.	GENERAL TECHNICAL REQUIREMENTS	
	ASHRAE-22-72	Method of testing for rating of water cooled refrigerant condensers.
	ASHRAE 23-67	Methods of testing for rating of positive displacement refrigerant compressors.
	ARI-450-6	Standard for water cooled refrigerant condensers.
	ARI-550	Standard for centrifugal water chilling packages.
	ARI-410	Standard for forced circulation air cooling and air heating coils
	ARI-430/435 BS:848 (Part-1,2)	Central station AHU/Application of Central Station AHU Fans
	BS:400	Low carbon steel cylinders for the storage & transport of permanent gases.
	BS:401	Low carbon steel cylinders for the storage & transport of liquified gases.
	CTI Code ACT-105	Acceptance test code for Water Cooling Tower.
	ANSI-31.5	Refrigerant piping
	ASME-PTC- 23-1958	Atmospheric Water Cooling Equipment
	AMCA A-21C	Test Code for air moving devices
	API:618	Reciprocating Compressor for general refinary services.
	HYDRAULIC INSTITUTE STANDARDS.	
	HYDRANT SYSTEM MANUALS OF TAC.	
	TAC MANUALS OF SPRAY SYSTEM	
	NFPA USA/ NSC UK/ UL USA/ FM USA STANDARDS.	
	INDIAN EXPLOSIVES ACT.	
	INDIAN FACTORIES ACT.	
	STANDARD OF TUBULAR EXCHANGER MANUFACTURER'S ASSOCIATION.	

CLAUSE NO.	GENERAL TECHNICAL REQUIREMENTS	एनटीपीसी NTPC

CODE AND STANDARD FOR CIVIL WORKS

Some of the applicable Standards, Codes and references are as follows:

Excavation & Filling

IS: 2720 (Part-II, IV TO VIII, XIV, XXI, XXIII, XXIV, XXVII TO XXIX, XL) Methods of test for soils-determination for water content etc.

IS: 4701 Code of practice for earth work on canals.

IS: 9758 Guide lines for Dewatering during construction.

IS: 10379 Code of practice for field control of moisture and compaction of soils for embankment and sub-grade.

Properties, Storage and Handling of Common Building Materials

IS: 269 Specification for ordinary Portland cement, 33 grade.

IS: 383 Specification for coarse and fine aggregates from natural sources for concrete.

IS: 432 Specification for mild steel and (Parts 1&2) medium tensile steel bars and hard-drawn steel wires for concrete reinforcement.

IS: 455 Specification for Portland slag cement.

IS: 702 Specification for Industrial bitumen.

IS: 712 Specification for building limes.

IS: 808 Rolled steel Beam channel and angle sections.

IS: 1077 Specification for common burnt clay building bricks.

IS: 1161 Specification of steel tubes for structural purposes.

IS: 1363 Hexagon head Bolts, Screws and nuts of production grade C.

IS: 1364 Hexagon head Bolts, Screws and Nuts of Production grade A & B.

IS: 1367 Technical supply conditions for Threaded fasteners.

IS: 1489 (Part-I) Specification for Portland-pozzolana cement: Fly ash based.

CLAUSE NO.	GENERAL TECHNICAL REQUIREMENTS	
	(Part-II)	Calcined clay based.
	IS: 1542	Specification for sand for plaster.
	IS: 1566	Specification for hard-drawn steel wire fabric for concrete reinforcement.
	IS: 1786	Specification for high strength deformed bars for concrete reinforcement.
	IS: 2062	Specification for steel for general structural purposes.
	IS: 2116	Specification for sand for masonry mortars.
	IS: 2386 (Parts-I to VIII)	Testing of aggregates for concrete.
	IS: 3150	Hexagonal wire netting for general purpose.
	IS: 3495 (Parts-I to IV)	Methods of tests of burnt clay building bricks.
	IS: 3812	Specification for fly ash, for use as pozzolana and admixture.
	IS: 4031	Methods of physical tests for hydraulic cement.
	IS: 4032	Methods of chemical analysis of hydraulic cement.
	IS: 4082	Recommendations on stacking and storage of construction materials at site.
	IS: 8112	Specification for 43 grade ordinary portland cement.
	IS: 8500	Medium and high strength structural steel.
	IS: 12269	53 grade ordinary portland cement.
	IS: 12894	Specification for Fly ash lime bricks.
	Cast-In-Situ Concrete and Allied Works	
	IS: 280	Specification for mild steel wire for general engineering purposes.
	IS: 456	Code of practice for plain and reinforced concrete.

CLAUSE NO.	GENERAL TECHNICAL REQUIREMENTS	
	IS: 457	Code of practice for general construction of plain & reinforced concrete for dams & other massive structures.
	IS: 516	Method of test for strength of concrete.
	IS: 650	Specification for standard sand for testing of cement.
	IS: 1199	Methods of sampling and analysis of concrete.
	IS: 1791	General requirements for batch type concrete mixers.
	IS: 1838 (Part-I)	Specification for preformed fillers for expansion joints in concrete pavements and structures (non-extruding and resilient type).
	IS: 2204	Code of practice for construction of reinforced concrete shell roof.
	IS: 2210	Criteria for the design of reinforced concrete shell structures and folded plates.
	IS: 2438	Specification for roller pan mixer.
	IS: 2502	Code of practice for bending and fixing of bars for concrete reinforcement.
	IS: 2505	General requirements for concrete vibrators, immersion type.
	IS: 2506	General requirements for concrete vibrators, screed board type.
	IS: 2514	Specification for concrete vibrating tables.
	IS: 2645	Specification for Integral cement water proofing compounds.
	IS: 2722	Specification for portable swing weigh batches for concrete. (single and double bucket type)
	IS: 2750	Specification for Steel scaffolding.
	IS: 2751	Code of practice for welding of mild steel plain and deformed bars for reinforced concrete construction.
	IS: 3025	Methods of sampling and test waste water.
	IS: 3366	Specification for Pan vibrators.
	IS: 3370	Code of practice for concrete structures for the storage of

CLAUSE NO.	GENERAL TECHNICAL REQUIREMENTS	
	(Part I to IV)	liquids.
	IS: 3414	Code of practice for design and installation of joints in buildings.
	IS: 3550	Methods of test for routine control for water used in industry.
	IS: 3558	Code of practice for use of immersion vibrators for consolidating concrete.
	IS: 4014 (Parts I & II)	Code of practice for steel tubular scaffolding.
	IS: 4326	Code of practice for earthquake resistant design and construction of buildings.
	IS: 4461	Code of practice for joints in surface hydro-electric power stations.
	IS: 4656	Specification for form vibrators for concrete.
	IS: 4925	Specification for batching and mixing plant.
	IS: 4990	Specification for plywood for concrete shuttering work.
	IS: 4995 (Parts I & II)	Criteria for design of reinforced concrete bins for the storage of granular and powdery materials.
	IS: 5256	Code or practice for sealing joints in concrete lining on canals.
	IS: 5525	Recommendations for detailing of reinforcement in reinforced concrete work.
	IS: 5624	Specification for foundation bolts.
	IS: 6461	Glossary of terms relating to cement concrete.
	IS: 6494	Code of practice for water proofing of underground water reservoirs and swimming pools.
	IS: 6509	Code of practice for installation of joints in concrete pavements.
	IS: 7861	Code of practice for extreme weather concreting. (Parts I & II)
	IS: 9012	Recommended practice for shot concreting.
	IS: 9103	Specification for admixtures for concrete.

CLAUSE NO.	GENERAL TECHNICAL REQUIREMENTS	
	IS: 9417	Recommendations for welding cold worked steel bars for reinforced concrete construction.
	IS: 10262	Recommended guidelines for concrete mix design.
	IS: 11384	Code of practice for composite construction in structural steel and concrete.
	IS: 11504	Criteria for structural design of reinforced concrete natural draught cooling towers.
	IS: 12118	Specification for two-parts poly sulphide.
	IS: 12200	Code of practice for provision of water stops at transverse contraction joints in masonry and concrete dams.
	IS: 13311	Method of non-destructive testing of concrete.
	Part-1	Ultrasonic pulse velocity.
	Part-2	Rebound hammer.
	SP:23	Handbook of concrete mixes
	SP: 24	Explanatory Handbook on IS: 456-1978
	SP: 34	Handbook on concrete reinforcement and detailing.
	Precast Concrete Works	
	SP: 7(PartVI/	National Building Code- Structural design of prefabrication and Sec.7) systems building.
	IS: 10297	Code of practice for design and construction of floors and roofs using precast reinforced/prestressed concrete ribbed or cored slab units.
	IS: 10505	Code of practice for construction of floors and roofs using pre-cast reinforced concrete units.
	Masonary and Allied Works	
	IS: 1905	Code of Practice for Structural Safety of Buildings-Masonry walls
	IS: 2212	Code of Practice for Brickwork.

IS: 2250	Code of Practice for Preparation and use of Masonry Mortar.
SP: 20	Explanatory hand book on masonry code.

Sheeting Works

IS:277	Galvanised steel sheets (plain or corrugated).
IS: 459	Unreinforced corrugated and semi-corrugated asbestos cement sheets.
IS: 513	Cold-rolled carbon steel sheets.
IS: 730	Specification for fixing accessories for corrugated sheet roofing.
IS: 1626	Specification for Asbestos cement building pipes and pipe fittings, gutters and gutter fittings and roofing fittings.
IS: 2527	Code of practice for fixing rain water gutters and down pipe for roof drainage.
IS: 3007	Code of practice for laying of asbestos cement sheets.
IS: 5913	Methods of test for asbestos cement products.
IS: 7178	Technical supply conditions for tapping screw.
IS: 8183	Bonded mineral wool.
IS: 8869	Washers for corrugated sheet roofing.
IS: 12093	Code of practice for laying and fixing of sloped roof covering using plain and corrugated galvanised steel sheets.
IS: 12866	Plastic translucent sheets made from thermosetting polyster resin (glass fibre reinforced).
IS: 14246	Specification for continuously pre-painted galvanised steel sheets and coils.

Fabrication and Erection of Structural Steel Work

IS: 2016	Specification for plain washers.

CLAUSE NO.	GENERAL TECHNICAL REQUIREMENTS	
	IS: 814	Specification for covered Electrodes for Metal Arc Welding for weld steel.
	IS: 1852	Specification for Rolling and Cutting Tolerances for Hot rolled steel products.
	IS: 3502	Specifications for chequered plate.
	IS: 6911	Specification for stainless steel plate, sheet and strip.
	IS: 3757	Specification for high strength structural bolts
	IS: 6623	Specification for high strength structural nuts.
	IS: 6649	High Tensile friction grip washers.
	IS: 800	Code of practice for use of structural steel in general building construction.
	IS: 816	Code of practice for use of Metal Arc Welding for General Construction.
	IS: 4000	Code of practice for assembly of structural joints using high tensile friction grip fasteners.
	IS: 9595	Code of procedure of Manual Metal Arc Welding of Mild Steel.
	IS: 817	Code of practice for Training and Testing of Metal Arc Welders.
	IS: 1811	Qualifying tests for Metal Arc Welders (engaged in welding structures other than pipes).
	IS: 9178	Criteria for Design of steel bins for storage of Bulk Materials.
	IS: 9006	Recommended Practice for Welding of Clad Steel.
	IS: 7215	Tolerances for fabrication steel structures.
	IS: 12843	Tolerance for erection of structural steel.
	IS: 4353	Recommendations for submerged arc welding of mild steel and low alloy steels.
	SP: 6 (Part 1 to 7)	ISI Hand book for structural Engineers.

IS: 1608	Method of Tensile Testing of Steel products other than sheets, strip, wire and tube.
IS: 1599	Method of Bend Tests for Steel products other than sheet, strip, wire and tube
IS : 228	Methods of chemical Analysis of pig iron, cast iron and plain carbon and low alloy steel.
IS : 2595	Code of Practice for Radio graphic testing.
IS : 1182	Recommended practice for Radiographic Examination of fusion welded butt joints in steel plates.
IS : 3664	Code of practice for Ultra sonic Testing by pulse echo method.
IS : 3613	Acceptance tests for wire flux combination for submerged Arc Welding.
IS : 3658	Code of practice for Liquid penetrant Flaw Detection.
IS : 5334	Code of practice for Magnetic Particle Flaw Detection of Welds.

Plastering and Allied Works

IS : 1635	Code of practice for field slaking of Building lime and preparation of putty.
IS : 1661	Application of cement and cement lime plaster finishes.
IS : 2333	Plaster-of-paris.
IS : 2402	Code of practice for external rendered finishes.
IS : 2547	Gypsum building plaster.
IS : 3150	Hexagonal wire netting for general purpose.

Acid and Alkali Resistant Lining

IS : 158	Ready mixed paint, brushing, bituminous, black, lead free, acid, alkali & heat resisting.
IS : 412	Specification for expanded metal steel sheets for general purpose.

CLAUSE NO.	GENERAL TECHNICAL REQUIREMENTS	
	IS : 4441	Code of practice for use of silicate type chemical resistant mortars.
	IS : 4443	Code of practice for use of resin type chemical resistant mortars.
	IS : 4456	Method of test for chemical resistant tiles. (Part I & II)
	IS : 4457	Specification for ceramic unglazed vitreous acid resistant tiles.
	IS : 4832	Specification for chemical resistant mortars.
		Part I Silicate type
		Part II Resin type
		Part III Sulphur type
	IS : 4860	Specification for acid resistant bricks.
	IS : 9510	Specification for bitumasitc, Acid resisting grade.
	Water Supply, Drainage and Sanitation	
	IS : 458	Specification for concrete pipes.
	IS : 554	Dimensions for pipe threads, where pressure tight joints are made on thread.
	IS : 651	Specification for salt glazed stoneware pipes.
	IS : 774	Flushing cisterns for water closets and urinals.
	IS : 775	Cast iron brackets and supports for wash basins and sinks.
	IS : 778	Copper alloy gate, globe and check valves for water works purposes.
	IS : 781	Cast copper alloy screw down bib taps and stop valves for water services.
	IS : 782	Caulking lead.
	IS : 783	Code of practice for laying of concrete pipes.

CLAUSE NO.	GENERAL TECHNICAL REQUIREMENTS	
	IS : 1172	Basic requirements for water supply, drainage and sanitation.
	IS : 1230	Cast iron rain water pipes and fittings.
	IS : 1239	Mild steel tubes, tubulars and other wrought steel fittings.
	IS : 1536	Centrifugally cast (Spun) iron pressure pipes for water, gas and sewage.
	IS : 1537	Vertically cast iron pressure pipes for water, gas and sewage.
	IS : 1538	Cast iron fittings for pressure pipe for water, gas and sewage.
	IS : 1703	Ball valves (horizontal plunger type) including float for water supply purposes.
	IS : 1726	Cast iron manhole covers and frames.
	IS : 1729	Sand cast iron spigot and socket, soil, water and ventilating pipes, fittings and accessories.
	IS : 1742	Code of practice for building drainage.
	IS : 1795	Pillar taps for water supply purposes.
	IS : 1879	Malleable cast iron pipe fittings.
	IS : 2064	Code of practice for selection, installation and maintenance of sanitary appliances.
	IS : 2065	Code of practice for water supply in building.
	IS : 2326	Automatic flushing cisterns for urinals.
	IS : 2470 (Part-I & II)	Code of practice for installation of septic tanks.
	IS : 2501	Copper tubes for general engineering purposes.
	IS : 2548	Plastic seat and cover for water-closets.
	IS : 2556 (Part 1 to 15)	Vitreous sanitary appliances (vitreous china).
	IS : 2963	Non-ferrous waste fittings for wash basins and sinks.

CLAUSE NO.	GENERAL TECHNICAL REQUIREMENTS	
	IS : 3114	Code of practice for laying of cast iron pipes.
	IS : 3311	Waste plug and its accessories for sinks and wash basins.
	IS : 3438	Silvered glass mirrors for general purposes.
	IS : 3486	Cast iron spigot and socket drain pipes.
	IS : 3589	Electrically welded steel pipes for water, gas and sewage (200mm to 2000mm nominal diameter).
	IS : 3989	Centrifugally cast (Spun) iron spigot and socket soil, waste and ventilating pipes, fittings and accessories.
	IS : 4111 (Part I to IV)	Code of practice for ancillary structure in sewerage system.
	IS : 4127	Code of practice for laying of glazed stone-ware pipes.
	IS : 4764	Tolerance limits for sewage effluents discharged into inland-surface waters.
	IS : 4827	Electro plated coating of nickel and chromium on copper and copper alloys.
	IS : 5329	Code of practice for sanitary pipe work above ground for buildings.
	IS : 5382	Rubber sealing rings for gas mains, water mains and sewers.
	IS : 5822	Code of practice for laying of welded steel pipes for water supply.
	IS : 5961	Cast iron grating for drainage purpose.
	IS : 7740	Code of practice for road gullies.
	IS : 8931	Cast copper alloy fancy bib taps and stop valves for water services.
	IS : 8934	Cast copper alloy fancy pillar taps for water services.
	IS : 9762	Polyethylene floats for ball valves.
	IS : 10446	Glossary of terms for water supply and sanitation.

CLAUSE NO.	GENERAL TECHNICAL REQUIREMENTS	
	IS : 10592	Industrial emergency showers, eye and face fountains and combination units.
	IS : 12592	Specification for precast concrete manhole covers and frames.
	IS : 12701	Rotational moulded polyethylene water storage tanks.
	SP: 35	Hand book on water supply and drainage.
	-	Manual on Sewerage and sewage treatment (Published by CPH & EEO) As updated.
	Doors, Windows and Allied Works	
	IS : 204	Tower Bolts
	Part-I	Ferrous metals.
	Part-II	Nonferrous metals.
	IS : 208	Door Handles.
	IS : 281	Mild steel sliding door bolts for use with padlocks.
	IS : 362	Parliament Hinges.
	IS : 420	Specification for putty, for use on metal frames.
	IS : 1003 Part-I door	Specification for timber panelled and glazed shutters- (Part-I) shutters.
	IS : 1038	Steel doors, windows and ventilators.
	IS : 1081	Code of practice for fixing and glazing of metal (steel and aluminium) doors, windows and ventilators.
	IS : 1341	Steel butt hinges.
	IS : 1361	Steel windows for industrial buildings.
	IS : 1823	Floor door stoppers.
	IS : 1868	Anodic coatings on Aluminium and its alloys.
	IS : 2202 (Part-II)	Specification for wooden flush door shutters (solid core type); particle board face panels and hard board face panels

CLAUSE NO.	GENERAL TECHNICAL REQUIREMENTS	
	IS:2209	Mortice locks (vertical type).
	IS:2553	Safety glass
	IS:2835	Flat transparent sheet glass.
	IS:3548	Code of practice for glazing in buildings.
	IS:3564	Door closers (Hydraulically regulated).
	IS : 3614	Fire check doors; plate, metal covered and rolling type.
	IS:4351	Steel door frames.
	IS:5187	Flush bolts.
	IS:5437	Wired and figured glass
	IS:6248	Metal rolling shutters and rolling grills.
	IS:6315	Floor springs (hydraulically regulated) for heavy doors.
	IS:7196	Hold fasts.
	IS:7452	Hot rolled steel sections for doors, windows and ventilators.
	IS:10019	Mild steel stays and fasteners.
	IS:10451	Steel sliding shutters (top hung type).
	IS:10521	Collapsible gates.
	R oof Water Proofing and AlliedWorks	
	IS:1203	Methods of testing tar and bitumen.
	IS:1322	Specification for bitumen felts for water proofing and damp proofing.
	IS:1346	Code of practice for water proofing of roofs with bitumen felts.
	IS:1580	Specification for bituminous compound for water proofing and caulking purposes.

IS:3067	Code of practice for general design details and preparatory work for damp proofing and water proofing of buildings.
IS:3384	Specification for bitumen primer for use in water proofing and damp proofing.

Floor Finishes and Allied Works

IS:1237	Specification for cement concrete flooring tiles.
IS:1443	Code of practice for laying and finishing of cement concrete flooring tiles.
IS:2114	Code of practice for laying in-situ terrazzo floor finish.
IS:2571	Code of practice for laying in-situ cement concrete flooring.
IS:3462	Specification for unbacked flexible PVC flooring.
IS:4971	Recommendations for selection of industrial floor finishes.
IS:5318	Code of practice for laying of flexible PVC sheet and tile flooring.
IS:8042	Specification for white portland cement.
IS:13801	Specification for chequered cement concrete flooring tiles.

Painting and Allied Works

IS:162	Specification for fire resisting silicate type, brushing, for use on wood, colour as required.
IS:1477	Code of practice for painting of ferrous metals in buildings.
Part-I	Pretreatment.
Part-II	Painting.
IS:1650	Specification for colours for building and decorative finishes.
IS:2074	Specification for red oxide-zinc chrome, priming, ready mixed paint air drying.
IS:2338	Code of practice for finishing of wood and wood based materials.
Part-I	Operations and workmanship

CLAUSE NO.	GENERAL TECHNICAL REQUIREMENTS	
	Part-II	Schedules
	IS:2395	Code of practice for painting concrete, masonry and plaster surfaces.
	Part-I	Operations and workmanship.
	Part-II	Schedule.
	IS:2524	Code of practice for painting of nonferrous metals in buildings.
	Part-I	Pretreatment.
	Part-II	Painting.
	IS:2932	Specification of synthetic enamel paint, exterior, under-coating and finishing.
	IS:2933	Specification enamel paint, under coating and finishing.
	IS:4759	Code of practice for hot dip zinc coating on structural steel and other allied products.
	IS:5410	Specification for cement paint
	IS:5411 (Part-I)	Specification for plastic emulsion paint-for exterior use
	IS:6278	Code of practices for white washing and colour washing.
	IS:10403	Glossary of terms relating to building finishes.
	Piling and Foundation	
	IS:1080	Code of practice for design and construction of simple spread foundations.
	IS:1904	Code of practice for design and construction of foundations in Soils; General Requirements.
	IS:2911	Code of practice for designs and construction of Pile foundations (Relevant Parts).
	IS:2950 (Part-I)	Code of practice for designs and construction of Raft foundation.
	IS:2974 (Part-I TO V)	Code of practice for design and construction of machine foundations.
	IS:6403	Code of practice for determination of Allowable Bearing pressure on Shallow foundation.

CLAUSE NO.	GENERAL TECHNICAL REQUIREMENTS	
	IS:8009	Code of practice for calculation of settlement of foundation subjected to symmetrical vertical loads.
	Part-I	Shallow foundations.
	Part-II	Deep foundations.
	IS:12070	Code of practice for design and construction of shallow foundations on rocks.
	DIN:4024	Flexible supporting structures for machines with rotating machines.
	VDI:2056	Criteria for assessing mechanical vibrations of machines.
	VDI:2060	Criteria for assessing rotating imbalances in machines.
	Stop Log and Trash Rack	
	IS:4622	Recommendations for fixed - wheel gates structural design.
	IS:5620	Recommendations for structural design criteria for low head slide gates.
	IS:11388	Recommendations for design of trash rack for intakes.
	IS:11855	General requirements for rubber seals for hydraulic gates.
	Roads	
	IRC:5	Standard specifications and Code of practice for road bridges, section-I general Features of Design.
	IRC:14	Recommended practice of 2cm thick bitumen and tar carpets.
	IRC:16	Specification for priming of base course with bituminous primers.
	IRC:19	Standard specifications and code of practice for water bound macadam.
	IRC:21	Standard specifications and Code of practice for road bridges, section-III - Cement concrete (plain and reinforced).
	IRC:34	Recommendations for road construction in waterlogged areas.
	IRC:36	Recommended practice for the construction of earth embankments for road works.
	IRC:37	Guidelines for the Design of flexible pavements.
	IRC:56	Recommended practice for treatment of embankment slopes for erosion control.
	IRC:73	Geometric design standards for rural (non-urban) highways.
	IRC:86	Geometric Design standards for urban roads in plains.

IRC:SP:13	Guidelines for the design of small bridges & culverts.
IRC - Publication	Ministry of Surface Transport (Roads Wing), Specifications for road and bridge works.
IS:73	Specification for paving bitumen
Loadings	
IS:875 (Pt. I to V)	Code of practice for design loads other than earthquake) for buildings and structures.
IS:1893	Criteria for earthquake resistant design of structures.
IS:4091	Code of Practice for design and construction of foundation for transmission line towers & poles.
IRC:6	Standard specifications & code of practice for road bridges, Section-II Loads and stresses.
M.O.T.	Deptt. of railways Bridge Rules.
Safety	
IS:3696 (Part I & II)	Safety code for scaffolds and ladders.
IS:3764	Safety code for excavation work.
IS:4081	Safety code for blasting and related drilling operations.
IS:4130	Safety code for demolition of buildings.
IS:5121	Safety code for piling and other deep foundations.
IS:5916	Safety code for construction involving use of hot bituminous materials.
IS:7205	Safety code for erection on structural steelwork.
IS:7293	Safety code for working with construction machinery.
IS:7969	Safety code for handling and storage of building materials
IS:11769	Guidelines for safe use of products containing asbestos.
- Indian Explosives Act. 1940 as updated.	
Architectural design of buildings	
SP:7	National Building Code of India
SP:41	Hand book on functional requirements of buildings (other than industrial buildings)

CLAUSE NO.	GENERAL TECHNICAL REQUIREMENTS	एनटीपीसी NTPC

Miscellaneous

IS:802 (Relevant parts)	Code of practice for use of structural steel in overhead transmission line towers.
IS:803	Code of practice for design, fabrication and erection of vertical mild steel cylindrically welded in storage tanks.
IS:10430	Creteria for design of lined canals and liner for selection of type of lining.
IS:11592	Code of practice for selection and design of belt conveyors.
IS:12867	PVC handrails covers.
CIRIA Publication	Design and construction of buried thin-wall pipes.

REFERENCE CODES AND STANDARDS FOR CONTROL AND INSTRUMENTATION

The design, manufacture, inspection, testing & installation of all equipment and system covered under this specification shall conform to the latest editions of codes and standards mentioned below and all other applicable VDE, IEEE, ANSI, ASME, NEC, NEMA, ISA AND Indian Standards and their equivalents.

Temperature Measurements

1. Instrument and apparatus for temperature measurement - ASME PTC 19.3 (1974).
2. Temperature measurement - Thermocouples ANSI MC 96.1 - 1982.
3. Temperature measuremnet by electrical Resistance thermometers - IS:2806.
4. Thermometer - element - Platinum resistance - IS:2848.

Pressure Measurements

1. a) Instruments and apparatus for pressure measurement - ASME PTC 19.2 (1964).
   b) Electonic transmitters BS:6447.
2. Bourdon tube pressure and vacuum gauges - IS:3624 - 1966.
3. Process operated switch devices (Pr. Switch) BS-6134.

CLAUSE NO.	GENERAL TECHNICAL REQUIREMENTS	एनटीपीसी NTPC

Flow Measurements

Instruments and apparatus for flow measurements - ASME PTC 19.5 (1972) Interim supplement, Part-II.

Measurement of fluid flow in closed conduits - BS-1042.

Electronic Measuring Instrument & Control Hardware/ Software

1. Automatic null balancing electrical measuring instruments - ANSI C 39.4 (Rev. 1973): IS:9319.
2. Safety requirements for electrical and electronic measuring and controling instrument - ANSI C 39.5 - 1974.
3. Compatability of analog signals for electronic industrial process instruments - ISA - S 50.1 (1982) ANSI MC 12.1 - 1975.
4. Dynamic response testing of process control instrumentation ISA - S 26 (1968).
5. Surge Withstand Capability (SWC) tests - ANSI C 37.90 a/IEEE-472 or suitable class of IEC-255-4 equivalent to ANSI C37.90a/IEEE-472.
6. Printed circuit boards - IPC TM - 650, IEC 326 C.
7. General requirement and tests for printed wiring boards - IS 7405 (Part-I) 1973.
8. Edge socket connectors - IEC 130-11.
9. Requirements and methods of testing of wire wrap terminations DIN 41611 Part-2.
10. Dimensions of attachment plugs & receptacles - ANSI C 73 - 1973 (Supplement ANSI C 73 a - 1980).
11. Direct acting electrical indicating instrument - IS:1248 - 1968 (R).
12. Standard Digital Interface for Programmable Instrumentation - IEEE-488.2 - 1990.
13. Information Processing Systems - Local Area Networks - Part 2 : Logical Link Control - IEEE-802.2 - 1989.
14. Standard for Local Area Networks : Carrier Sense Multiple Access with Collision Detection - IEEE-802.3 - 1985.
15. Supplements A, B, C and E to Carrier Sense Multiple Access with Collision Detection - IEEE-802.3 - 1988.

CLAUSE NO.	GENERAL TECHNICAL REQUIREMENTS	एनटीपीसी NTPC

16. Standard for Local Area Networks : Token - Passing Bus Access Method - IEEE-802.4 - 1985.

17. Standard for Local Area Networks : Token - Ring Access Method and Physical Layer Specification - IEEE-802.5 - 1985.

18. IEEE Guide to Software Requirements Specifications - IEEE-830 - 1984.

19. Hardware Testing of Digital Process Computers - ISA RP55.1 - 1983.

20. Electromagnetic Susceptibility of Process Control Instrumentation - SAMA PMC 33.1 - 1978.

21. Interface Between the Data Terminal Equipment and Data Circuit - Terminating Equipment Employing Serial Binary Data Interchange - EIA-232-D-1987.

22. Electromagnetic Compatibility for Industrial Process Measurement and Control Equipment, Part 3 : Radiated Electromagnetic Field Requirements - IEC 801-3-1984.

Instrument Switches and Contact

1. Contact rating - AC services NEMA ICS 2 - 1978 (with revision through May 1983), Part - 2-125, A6000.

2. Contact rating - DC services NEMA ICS 2-1978 Part-2 125, N600.

Enclosures

1. Type of Enclosures - NEMA ICS Part - 6 - 1978 (with Rev. 1 4/80) through 110.22 (Type 4 to 13).

2. Racks, panels and associated equipment - EIA : RS - 310 C- 1983 (ANSI C 83.9 - 1972).

3. Protection class for Enclosures, cabinets, control panels & desks - IS:2147 - 1962.

Apparatus, enclosures and installation practices in hazardous area

1. Classification of hazardous area - NFPA 70 - 1984, Article 500.

2. Electrical Instruments in hazardous dust location - ISA - 512.11, 1973.

3. Instrinsically safe apparatus - NFPA 493 1978.

4. Purged and pressurised enclosure for electrical equipment in hazardous location - NFPA 496-1982.

5. Enclosures for Industrial Controls and Systems - NEMA IS 1.1 - 1977.

CLAUSE NO.	GENERAL TECHNICAL REQUIREMENTS	

Sampling System

1. Stainless steel material of tubing and valves for sampling system - ASTMA 296-82, Grade 7 P 316.
2. Submerged helical coil heat exchangers for sample coolers ASTM D11 92-1977.
3. Water and steam in power cycle - ASME PTC 19.11.
4. Standard methods of sampling system - ASTM D 1066-99.

Annunciators

1. Specifications and guides for the use of general purpose annunciators - ISA S 19.1, 1979.
2. Surge withstand capability tests - ANSI C 37.90a - 1989/IEEE-472 or suitable class of IEC 255-4 equivalent to ANSI C37.90a 1989/IEEE-472
3. Damp heat cycling test - IS:2106
4. Specification for Electromagnetic Susceptibility - SAMA DMC 33, 1/78

Protections

1. Relays and relay system associated with electric power apparatus. ANSI C 37.90, 1 - 1989.
2. General requirements & tests for switching devices for control and auxiliary circuits including contactor relays - IS:6875 (Part-I) - 1973.
3. Turbine water damage prevention - ASME TDP-1-1980.
4. Boiler safety interlocks - NFPA 85 - 2011 or latest version.

UPS System

1. Practices and requirements for semi-conductor power rectifiers - ANSI C 34.2, 1973.
2. Relays and relays system associated with electrical power apparatus - ANSI C 3.90 - 1983.
3. Surge withstand capability test - ANSI C 37.90 1 -1989.
4. Performance testing of UPS - IEC 146.
5. Stationary cells & Batteries Lead Acid type (with tubular positive plates) specification IS-1651-1991.

CLAUSE NO.	GENERAL TECHNICAL REQUIREMENTS	एनटीपीसी NTPC

6. Recommended practice for sizing large lead storage batteries for generating stations & sub-stations - IEEE-485-1985.

7. Printed Circuit Board - IPC TM 650, IEC 326C.

8. General Requirements & tests for printed wiring boards, IS:7405 (Part-I) 1973.

Control Valves

1. Control valve sizing - Compressible & Incompressible fluids - ISA S 75.01-1985.

2. Face to face dimensions of control valves - ANSI B 16.00 - 1973.

3. ISA Hand Book of Control Valves - (ISBN : B: 1047-087664-234-2).

4. Codes for pressure piping - ANSI B 31.1

5. Control Valve leak class - ISA RP 39.6

Process Connection & Piping

1. Codes for pressure piping "power piping" - ANSI B 31.1.

2. Seamless carbon steel pipe ASTM - A - 106.

3. Forged & Rolled Alloy steel pipe flanges, forged fittings and valves and parts - ASTM - A - 182.

4. Material for socket welded fittings - ASTM - A - 105.

5. Seamless ferritic alloy steep pipe - ASTM - A - 335.

6. Pipe fittings of wrought carbon steel and alloy steel - ASTM - A - 234.

7. Composition bronze of ounce metal castings - ASTM - B - 62.

8. Seamless Copper tube, bright annealed - ASTM - B - 168.

9. Seamless copper tube - ASTM - B - 75.

10. Dimension of fittings - ANSI - B - 16.11.

11. Valves flanged and butt welding ends - ANSI - B - 16.34.

Instrument Tubing

1. Seamless carbon steel pipe - ASTM - A 106.

2. Material of socketweld fittings - ASTM - A105.

3. Dimensions of fittings - ANSI - B - 16.11.

NABIN POWER GENERATING CO. LTD. NPGC

Bharat Heavy Electricals Ltd. Power Sector Marketing New Delhi-110003

CLAUSE NO.	GENERAL TECHNICAL REQUIREMENTS	एनटीपीसी NTPC

4. Code for pressure piping, welding, hydrostatic testing - ANSI B 31.1.

Cables

1. Thermocouples extension wires/cables - ANSI MC 96.1 - 1992.
2. Requirements for copper conductor-Wiring cables for telecommunications & information processing system - VDE:0815.
3. Colour coding of single or multi-pair cables - ICEA - S - 61-402 (third edition) NEMA WCS - 1979 with revisions thorugh 2/83.
4. Insulation & Sheathing compounds for cables : VDE 0207 (Part-4, 5 & 6).
5. Guide design and installation of cable systems in power generating stations (insulation, jacket materials) - IEEE Std. 422-1977.
6. Rules for Testing insulated cables and flexible cables : VVDE - 0472
7. Requirements of vertical flame propagation test - IEEE 383 - 1974 (R 1980)
8. Standard specification for tinned soft or annealed copper wire for electrical purpose - ASTM B-33-81.
9. Oxygen index and temperature index test - ASTM D - 2863.
10. Smoke density measurement test - ASTMD - 2843.
11. Acid gas generation test - IEC - 754 - 1.
12. Swedish Chimney test - SEN - 4241475 (F3).
13. Teflon (FEP) insulation & sheath test - ASTMD - 2116.
14. Thermocouple compensating cables - Testing requirements & sampling plan IS:8784.
15. PVC insulated electric cables for working voltage upto and including 1100 V - IS:1554 (Part-I).

Cable Trays, Conduits

1. Guide for design and installation of cable systems in power generating staiton (Cable trays, support systems, conduits) - IEEE Std. 422, 1977, NEMA VE-1 1979, NFPA 70-1984.
2. -do- Test Standards. NEMA VE-1-1979.
3. Zinc coating "hot dip" on assembled products for galvanising of carbon steel cable trays - ASTMA - 386-78.

Bharat Heavy Electricals Ltd. Power Sector Marketing
NABHA POWER GENERATING CO. PVT. LTD. NPGC

CLAUSE NO.	GENERAL TECHNICAL REQUIREMENTS	

Public Address System

1. Specifications for lod speakers - IS:7741 (Part-I, II and III)
2. Code of safety requirement for electric mains operated audio amplifiers - IS:1301
3. Specification for Public Address Amplifiers - IS:10426.
4. Code of practice for outdoor installation of PA system - IS:1982.
5. Code of practice for installation for indoor amplifying and sound distribution system - IS:1881.
6. Basic environmental testing procedures for electronic and electrical items - IS:9000.
7. Characteristics and methods of measurements for sound system equipment - IS:9302
8. Code of practice of electrical wiring installations (System voltage not exceeding 650 volts) - IS:732
9. Rigid steel conduits for electric wiring - IS:9537 (Part-I and II)
10. Fittings for rigid steel conduits for electrical wiring - IS:2667
11. Degree of protection provided by enclosure for low voltage switchgear and control gear - IS:2147.

Vibration Monitoring System

1. API 670 - 1994
2. BS : 4675 Part-2

ANNEXURE-I

MFGR.'s LOGO	MANUFACTURER'S NAME AND ADDRESS	MANUFACTURING QUALITY PLAN		PROJECT :
		ITEM :	QP NO.:	PACKAGE :
		SUB-SYSTEM:	REV.NO.:	CONTRACT NO. :
			DATE:	MAIN-SUPPLIER:
			PAGE: .... OF....	

SL. NO	COMPONENT & OPERATIONS	CHARACTERISTICS	CLASS	TYPE OF CHECK	QUANTUM OF CHECK		REFERENCE DOCUMENT	ACCEPTANCE NORMS	FORMAT OF RECORD		AGENCY			REMARKS
					M	C / N					M	C	N	
1.	2.	3.	4.	5.	6.		7.	8.	9.	D*	**	10.		11.

		LEGEND: * RECORDS, INDENTIFIED WITH "TICK" (√) SHALL BE ESSENTIALLY INCLUDED BY SUPPLIER IN QA DOCUMENTATION. ** M: MANUFACTURER/SUB-SUPPLIER C: MAIN SUPPLIER, N: NTPC P: PERFORM W: WITNESS AND V: VERIFICATION. AS APPROPRIATE, CHP: NTPC SHALL IDENTIFY IN COLUM "N" AS 'W"	एनटीपीसी NTPC	DOC. NO.:		REV..... CAT.....
MANUFACTURER/ SUB-SUPPLIER	MAIN-SUPPLIER		FOR NTPC USE			
SIGNATURE				REVIEWED BY	APPROVED BY	APPROVAL SEAL

FORMAT NO.: QS-01-QAI-P-09/F1-R1 1/1 ENGG. DIV./QA&I

NABINAGAR POWER GENERATING CO. PVT. LTD. NPGC

Bharat Heavy Electricals Ltd. Power Sector Marketing New Delhi - 110049

ANNEXURE-II

SUPPLIER'S LOGO	SUPPLIER'S NAME AND ADDRESS	FIELD QUALITY PLAN		PROJECT :
		ITEM :	QP NO.:	PACKAGE :
		SUB-SYSTEM:	REV. NO.:	CONTRACT NO. :
			DATE:	MAIN-SUPPLIER:
			PAGE: .... OF....	

SL. NO	ACTIVITY AND OPERATION	CHARACTERISTICS / INSTRUMENTS	CLASS OF CHECK #	TYPE OF CHECK	QUANTUM OF CHECK	REFERENCE DOCUMENT	ACCEPTANCE NORMS	FORMAT OF RECORD		REMARKS
1.	2.	3.	4.	5.	6.	7.	8.	9.	D*	10.

		LEGEND: * RECORDS, INDENTIFIED WITH "TICK" (√) SHALL BE ESSENTIALLY INCLUDED BY SUPPLIER IN QA DOCUMENTATION. LEGEND TO BE USED: CLASS # : A = CRITICAL, B=MAJOR, C=MINOR; 'A' SHALL BE WITNESSED BY NTPC FQA, 'B' SHALL BE WITNESSED BY NTPC ERECTION / CONSTRUCTION DEPTT. AND 'C' SHALL BE WITNESSED BY MAIN SUPPLIER (A & B CHECK SHALL BE NTPC CHP STAGE)	एनटीपीसी NTPC	DOC. NO.:		REV.....
MANUFACTURER/ SUB-SUPPLIER	MAIN-SUPPLIER		FOR NTPC USE			
SIGNATURE				REVIEWED BY	APPROVED BY	APPROVAL SEAL

FORMAT NO.: QS-01-QAI-P-09/F2-R1 1/1 ENGG. DIV./QA&I

ANNEXURE-III

एनटीपीसी NTPC	Project : Package : Supplier : Contractor No. :	Stage :	LIST OF ITEMS REQUIRING QUALITY PLAN AND SUB-SUPPLIER APPROVAL SUB-SYSTEM :	DOC. NO.: REV. NO.: DATE : PAGE : OF

S. N.	Item	QP/ Insp. Cat.	QP No.	QP Sub. Schedule	QP approval schedule	Proposed sub-supplier	Place	Sub-suppliers approval status / category	Sub-supplier Details submission schedule	Remarks

LEGENDS

SYSTEM SUPPLIER/SUB-SUPPLIER APPROVAL STATUS CATEGORY (SHALL BE FILLED BY NTPC)

A – For these items proposed vendor is acceptable to NTPC. To be indicated with letter "A" in the list alongwith the condition of approval, if any.

DR – For these items "Detailed required" for NTPC review. To be identified with letter "DR" in the list.

NOTED – For these items vendors are approved by Main Supplier and accepted by NTPC without specific vendor approval from NTPC. To be identified with "NOTED.'

QP/INSPN CATEGORY:

CAT-I : For these items the Quality Plans are approved by NTPC and the final acceptance will be on physical inspection witness by NTPC.

CAT-II : For these items the Quality Plans approved by NTPC. However no physical inspection shall be done by NTPC. The final acceptance by NTPC shall be on the basis review of documents as per approved QP.

CAT-III : For these items Main Supplier approves the Quality Plans. The final acceptance by NTPC shall be on the basis certificate of conformance by the main supplier.

UNITS/WORKS : Place of manufacturing Place of Main Supplier of multi units/works.

FORMAT NO.: QS-01-QAI-P-1/F3-R0 1/1 Engg. Div. / QA&I

ANNEXURE-IV

एनटीपीसी NTPC	Project : Stage : Package : Contractor : Contractor No. :	STATUS OF ITEM REQUIRING QP& SUB-SUPPLIER APPROVAL	DOC. NO.: REV. NO.: DATE : PAGE : OF

S. N.	Item / Service	QP/ Insp. Cat.	QP Sub. Schedule Approval schedule	Date of sub-missio n	Date of comm t Appl.	Status Code C/II/I	Proposed Sub-suppliers	Place of manufacturing works	Approva l Status	Sub-supplier detail submissio n schedule	Remarks

FORMAT 1/1 Engg. Div. / QA&I

Bharat Heavy Electricals Ltd. Power Sector Marketing Noida - 110049

ANNEXURE-V

एनटीपीसी NTPC

Project :
Contractor :
Contractor No. :
System :

Stage :

FIELD WELDING SCHEDULE
(To be raised by the contractor)
Welding Code: .....

DOC. NO.:
REV. NO.:
DATE :
PAGE : OF

Sl. No.	DRG No. for Weld Location and Identification mark	Description of parts to welded	Matl. Spec.	Dimensions		Process of welding	Type of Weld	Electrode filler spec.	WPS. No.	Min. pre-heat	Heat treatment		NDT method/ Quantum	REF		Remarks
											Temp.	Holding time		Spec. No.	ACC Norm Ref.	

NOTES:

SIGNATURE

FORMAT 1/1 Engg. Div. / QA&I

NABINAGAR POWER GENERATING CO. PVT. LTD. NPGC

Bharat Heavy Electricals Ltd. Power Sector Marketing New Delhi-110049

CLAUSE NO.	GENERAL TECHNICAL REQUIREMENTS (Annexure-VI)	

S.No	Description of Drgs/Docs	No of Prints	No of CD ROMs/DVDs/Portable Hard Disk
1	Drawings, Data sheets, Design calculations, Purchase specifications and other documents		
	First submission and submission with major changes		
	▪ Layout (A0&A1 sizes)	4	-
	▪ Other Drawings/Documents (A0&A1 sizes)	2	-
	▪ P&ID (All sizes)	4	-
	a) Final drawings/documents (Directly to site)	6	2
	b) "As Built" Drawing/Documents (Directly to site)	6	2
	c) Analysis reports of Equipments / piping /structures components/system employing software packages as detailed in the specifications.	2	2
2	Erection Manual (Directly to site)	4 sets	2
3	Operation & Maintenance manual i) First Submission	1 set	--
	ii) Final Submission (Directly to site)	4 sets	2
4	Plant Hand Book i) First Submission	1	1
5	Commissioning and Performance Test Procedure manual i) First Submission	1 set	--
	ii) Final Submission (Directly to site)	4 sets	2

CLAUSE NO.	GENERAL TECHNICAL REQUIREMENTS (Annexure-VI) एनटीपीसी NTPC

S.No	Description of Drgs/Docs	No of Prints	No of CD ROMs/DVDs/Portable Hard Disk
6	Performance and Functional Guarantee Test Report i) First Submission	2 sets	–
	ii) Approved Copies (Direct to Site)	4 sets	2
7	Project Completion Report (Directly to site)	6 sets	2
8	QA programme including Organisation for implementation and QA system manual(with revisions)	1	–
9	Vendor details in respect of proposed vendors including contractor's evaluation report.	2	–
10	Manufacturing QPs, Field QPs, Field welding schedules and their reference document like test procedures, WPS, POR etc i) For review/comment	1	–
	ii) Approved final copies of Field QPs, Field welding schedules and their reference document like test procedures, WPS, POR etc (Direct to Site)	4	2
11	Welding Manual, Heat Treatment Manuals, Storage & preservation manuals i) For review/comment	1 set	–
	ii) Approved copies (Direct to Site)	4 sets	2
12	QA Documentation Package for items / equipment manufactured and despatched to site	2 sets	2
13	QA Documentation Package for field activities on equipment/systems at site	2 sets	2

Bharat Heavy Electricals Ltd. Power Sector Marketing New Delhi - 110049

NABINAGAR POWER GENERATING CO. PVT. LTD. NPGC

CLAUSE NO.	GENERAL TECHNICAL REQUIREMENTS ANNEXURE-VII

PRODUCT	AREAS OF TRAINING REQUIEMENT			
	PRODUCT DESIGN	Plant Visit	Visit to Manufacturer's Work	Operation & Maintenance of Plant
FGD	Layout & model of FGD area, cable & piping trestles etc. FGD • Mass balance, Design, selection and sizing calculations of FGD • Training on factors affecting sizing/ efficiency of FGD system, equipments & auxiliaries • Materials for FGD & selection • Basic concepts, Design and sizing calculations on slurry systems including piping, valves, etc.. • FGD electrical system • FGD control system Erection strategies, erection procedures Performance as per applicable code and demonstration tests.	Familiarization with various system and equipment Performance, data collection analysis and review O&M feed back Operation history of various equipments and system Failure analysis	Manufacturing process of Absorber and equipments Welding process Testing facilities Product development in process Future plan for technology induction R&D work in progress	Control philosophy operation, notices, logic & protection schemes, O&M manual familiarization O&M issues. Familiarization of special maintenance techniques Special tool and tackles familiarization
MANMONTH	2	0.5	0.5	6
ZLD System (In Projects where ZLD System is provided by Contractor)	• Basic design features of ZLD system for FGD WWT Plant • Theory & principle of operation • Discussions on various measurement points, Types, Ranges and locations for the offered system • Latest technological trends in ZLD system for FGD WWT Plant and design aspects • Software and model test	Operational feedback O&M history/ problems related to ZLD system	Training on ZLD system for FGD Waste water System description, basic design and engineering Manufacturing process of ZLD system equipments Testing facilities	Trouble shooting and fault analysis Familiarization of special maintenance techniques Special tool and tackles familiarization
MANMONTH	0.5	0.25	0.25	1

	TITLE: 3x660 MW NABINAGAR STPP TECHNICAL SPECIFICATION FOR AGITATORS	SPECIFICATION No: PE-TS-457-571- **8000-A001**	
		SECTION-I, SUB-SECTION-C2B	
		REV. 01	DATE: SEP. 2020
		SHEET : 1 OF 1	

PROJECT SPECIFIC GENERAL REQUIREMENTS INCLUDING: QUALITY ASSURANCE

CLAUSE NO.	QUALITY ASSURANCE	एनटीपीसी NTPC

1.11.0 **AGITATORS:**

1.11.01 Rubber lining shall be tested for hardness and spark test

1.11.02 Impellers shall be tested for dimensional and balancing check

1.11.03 Gear Boxes shall be tested for run test as per standard practice

1.12.0 **FANS:**

1.12.01 Rotor components shall be subjected to ultrasonic test at mill and magnetic particle inspection / liquid penetrant examination after rough machining.

1.12.02 Butt welds in rotor components shall be subjected to 100% RT and all welds shall be magnetic particle/dye penetrant tested after stress relieving.

1.12.03 All rotating components and assemblies of fan shall be balanced dynamically

1.12.04 Performance test shall be carried out on fans as per Technical specification/ Relevant standard

1.12.05 Test for Natural Frequency and hardness of Fans blades shall be carried out as per Technical specification/ Relevant standard

1.13.0 **Thermal Insulation, Lagging & Cladding:**

(a) **Lightly resin bonded mineral wool:**

LRB mattresses/sections of Rockwool/ Glasswool shall conform to & tested as per relevant clauses of Indian Standards and shall meet the requirements of NTPC data sheet. Type tests except Thermal Conductivity shall be regularly carried out once in three months. Thermal Conductivity Type Test shall be carried out minimum once in twelve months by the manufacturer. Requirements of various components like Binding wires, Lacing wires, Wire mesh, etc. shall be as per NTPC approved data sheet / as given in respective Sub-Section of Technical Requirements of Steam Generator & Auxiliaries.

(b) **Lagging & Cladding:**

All insulation shall be protected by means of an outer covering of Aluminium sheeting confirming to ASTM B-209-1060 temper H14 from reputed manufacturer meeting the requirements of NTPC data sheet.

1.14.0 **OTHER CRITICAL EQUIPMENTS:**

1.14.01 Checks/ NDTs shall be done as per relevant Indian Standards or equivalent International Standards.

NABHA POWER GENERATION CO. PVT. LTD. NPGC

Sector Marketing New Delhi - 110092

Table -1

Valve size NB in mm	ANSI Class upto 300	ANSI Class above 300 upto 600	ANSI Class above 600 below 900	ANSI Class 900 & above & below 4500
Less than 50	Visual	Visual	Visual	MPI
50 & above but below100	Visual	Visual	MPI	MPI & RT (on 10%of valves on 100% area)
100 & above but less than 300	Visual	MPI	MPI & RT (on 10% of valves on change of section & weld ends)	MPI & RT (on 100% area)
300 and above	MPI	MPI	MPI & RT (on change of sections & weld ends)	MPI, RT on100% area)

NOTE: For body and bonnet forgings UT with MPI may be adopted in place of RT for austenitic steel MPI may be replaced by LPI

1.06.00 **Metallic expansion Joint (if applicable)**

(a) Hydraulic pressure test shall be carried out on each pipe and expansion bellow.

(b) Longitudinal butt weld on bellow shall be subjected to suitable NDT examination before forming, and after forming MPE / DP test shall be carried out.

(c) All welds shall be subjected to 100% magnetic particle/dye pentrant check and butt welds shall be subjected to 100% radiographic testing.

(d) All the bellows subjected to vacuum service shall be subjected to vacuum test.

(e) The bellows shall be subjected to movement test to establish suitability to perform satisfactorily in site conditions. During this test spring rate shall also be measured.

(f) Life cycle test, meridional yield rupture test and squirm test to be carried out on a prototype/expansion bellow as per Sec.D clause 3.2 of standards of Expansion joint Manufacturer Association (EJMA). In case these tests have already been accepted by NTPC on a prototype expansion bellow, as defined in Sec. D Clause 3.2 of Expansion Joints Manufacturers Association (EJMA) test reports may be furnished by manufacturer for consideration and approval of Employer.

1.07.00 **CHEMICAL DOSING SYSTEM (HP/LP/OXYGENATED)**

(a) Pumps of chemical dosing system shall be performance tested as per relevant international codes.

(b) In case of diaphragm type of pumps, the life cycle test shall be done on pumps. If this test is already conducted for same model in earlier projects of NTPC, then TCs for same shall be reviewed.

(c) Dosing skid shall be subjected to leakage test and functional test.

(d) Oxygen cylinders shall be as per relevant standard meeting statutory requirements.

Agitator inspection requirement-Please note that attached QP is indicative only. Stage inspection and Quantum of check may vary during final approval by customer (NTPC).

020/PS-PEM-MAX

anipet	MANUFACTURER'S NAME AND ADDRESS M/S BHEL: BAP: RANIPET 632 406 TAMIL NADU	STANDARD QUALITY PLAN ITEM: AGITATOR SYSTEM: FGD	QP NO	FGS: 720
			REV. NO:	00
			DATE:	12.02.2019
			PAGE NO:	Page 2 of 2

	COMPONENT & OPERATIONS	CHARACTERISTICS	CLASS	TYPE OF CHECK	QUANTUM OF CHECK		REFERENCE DOCUMENT	ACCEPTANCE NORMS	FORMAT OF RECORD		AGENCY			REMARKS
					M	B					M	C	N	
	2.	3.	4.	5.	6.		7.	8.	9.	D *	** 10.			11.
														Horizontal
	Free Air Run Test of complete assembly	Measurement Current, RPM, Noise & Vibration	MA	Measurement	100%	10%	Vendor Standard / Approved Drawing / Data Sheet		IR	√	P	W	W	
	Review of QA Documents	Verification of QA Documents	MA	Verification	100%	100%	As per Appd. MQP		IR		P	V	V	
	Painting & Preservation													
		Painting Material	MI	Review of MTC	100%		Appd. "Painting Procedure"/Approved Painting Schedule		IR	√	P	V	-	
5.2		Surface treatment and inspection	MI	Visual	100%	-	-do-		IR	√	P	-	-	
5.3		DFT Check	MI	Measurement	10%		-do-		IR	√	P	V	-	
5.4		Painting Surface Quality	MI	Visual	100%		-do-		IR	√	P	V	-	
6.0	**Inspection before Delivery**													
6.1	Pa	Size, appearance & firmness	MI	Measurement & Visual	100%		As per "Packing Procedure"		IR	√	P	V	-	
6.2	De nents	Markings, Packing List & Details Packing List, etc., Check	MI	Verification	100%		As per "Packing Procedure"		IR	√	P	V	-	

NOTES:

1. tor Motor rating is 45KW and motor make NTPC/BHEL Approved source.
2. test report duly witnessed by main contractor as per applicable standard shall be reviewed during inspection (more than 30 KW Rating).

LEGEND: * DENTIFIED WITH "TICK" (√) UNDER COLUMN 'D' SHALL BE SUBMITTED TO CUSTOMER AS A QA DOCUMENTATION PACKAGE.
M: MANUFACTURER / SUB SUPPLIER, **C:** MAIN CONTRACTOR.
N: CUSTOMER/CONSULTANT **P:** PERFORM **W:** WITNESS **V:** REVIEW OF RECORDS
MA: MAJOR AND **MI:** MINOR

PREPARED BY	REVIEWD & APPROVED BY
Rakesh Kumar Madhu,(SEr/QA)	K C Gandhi Parimalam,(DGM/QA)

Ranipet	MANUFACTURER'S NAME AND ADDRESS M/S BHEL: BAP: RANIPET 632 406 TAMIL NADU	STANDARD QUALITY PLAN ITEM: AGITATOR SYSTEM: FGD	QP NO	FGS: 720
			REV. NO:	00
			DATE:	12.02.2019
			PAGE NO:	Page 1 of 2

SL. NO	COMPONENT & OPERATIONS	CHARACTERISTICS	CLASS	TYPE OF CHECK	QUANTUM OF CHECK		REFERENCE DOCUMENT	ACCEPTANCE NORMS	FORMAT OF RECORD		AGENCY			REMARKS
					M	B					M	C	N	
1.	2.	3.	4.	5.	6.		7.	8.	9.	D *	** 10.			11.
1.0	**Raw Material Inspection**													
1.1	All materials including casting & forgings	Chem. & Mech. Dimensions Surface Defects	MA MA MA	Review of MTC Measurement Visual	1/Heat 100% 100%	1/Heat - -	As per spec. & Appd. Dwg		TC IR IR	√	P P P	V - -	V - -	
2.0	**Motor : Review Of Manufacture Test Certificate**													
3.0	**In Process Inspection**													
3.1	Welding Qualifications	WPS & PQR	MA	WPS, PQR & WPQ	100%		ASME Sec IX		IR	√	P	V	V	Recent qualified WPS, PQR and WPQ shall be submitted for review during inspection
3.2	Marking, Cutting, Edge Preparation Tacking	Dimensions	MA	Measurement	100%	-	Appd.Dwg.		IR		P	-	-	
3.3	Welds	Dimensions & Surface Quality	MA	Measurement	100%		Appd.Dwg.& ASME Sec VIII		IR	√	P	W	V	
3.4	Machining of Components	Dimensions Surface Defects	MA	Measurement Visual	100% 100%	- -	Appd. Dwg.		IR		P P	- -	- -	
3.5	Impeller	Static balance test	MA	Measurement	100%		As per Specs.		TR	√	P	V	V	
3.6	Rubber Lining	Hardness test & Spark test	MA	Measurement	100%		As per Specs.	Appd. Drg	TR	√	P	W	V	
3.7	Assembly	Dimensions Completeness	MA	Measurement Visual	100% 100%		Appd.Drg.		IR	√	P P	V V	V V	
4.0	**Final Inspection**													
4.1	Final Assembly	Overall Dimensions & Completeness	MA MA	Measurement Visual	100%	10%	Appd. Dwg		IR	√	P	W	V	*10% pf each type (Vertical /

LEGEND: * RECORD, IDENTIFIED WITH "TICK" (√) UNDER COLUMN 'D' SHALL BE SUBMITTED TO CUSTOMER AS A QA DOCUMENTATION PACKAGE.
M: MANUFACTURER / SUB SUPPLIER, **C:** MAIN CONTRACTOR.
N: CUSTOMER/CONSULTANT **P:** PERFORM **W:** WITNESS **V:** REVIEW OF RECORDS
MA: MAJOR AND **MI:** MINOR

PREPARED BY	REVIEWD & APPROVED BY
Rakesh Kumar Madhu,(SEr/QA)	K C Gandhi Parimalam,(DGM/QA)

QUALITY REQUIREMENT

(a) Since this items comes under Sub-QR Category, hence inspection at vendor works is applicable by BHEL/BHEL TPI and NTPC as per NTPC Approved Quality plan.

(b) Supplier shall submit the MQP in NTPC Format (Sample QP attached herewith) for approval of NTPC. Please note that attached QP is indicative and minimum requirement only. Stage inspection and Quantum of check may vary during final approval by customer (NTPC).

(c) Painting : Painting details in the specification are minimum requirement. Painting shall be as per approved schedule which will be submitted by successful bidder during detail engg.

(d) In case of order placed on foreign vendors, vendor has to finalize Inspection agency at their own cost and carry out inspection as per the approved Quality plan . Further, the list of third party insection agencies (as applicable) shall be provided by BHEL during detail engineering.Vendor has to furnish BHEL the inspection reports and other documents required as per approved Quality plan duly signed by the Inspection Agency after their witness for BHEL's review and acceptance.

SUB-SECTION-V-QE1

MOTORS

MOTOR

TEMS/COMPONENTS \ TESTS/CHECKS	Visual	Dimensional	Make/Type/Rating /General Physical Inspection	Mech/Chem. Properties	NDT /DP/MPI/UT	Metallography	Electrical Characteristics	Welding/Brazing(WPS/PQR)	Heat Treatment	Magnetic Characteristics	Hydraulic/Leak/Pressure Test	Thermal Characteristics	Run out	Dynamic Balancing	Routine & Acceptance tests as per IS 325/IS 4722 /IS 9283/IS 2148/IEC60034\IEC 60079-I/ IS-12615	Vibration	Over speed	Tan delta, shaft voltage & polarization index test	Paint shade, thickness & adhesion
Plates for stator frame, end shield, spider etc.	Y	Y	Y	Y	Y				Y										
Shaft	Y	Y	Y	Y	Y	Y			Y										
Magnetic Material	Y	Y	Y	Y			Y			Y		Y							
Rotor Copper/Aluminium	Y	Y	Y	Y			Y		Y										
Stator copper	Y	Y	Y	Y			Y		Y			Y							
SC Ring	Y	Y	Y	Y	Y		Y	Y	Y										
Insulating Material	Y		Y	Y			Y					Y							
Tubes, for Cooler	Y	Y	Y	Y	Y				Y		Y								
Sleeve Bearing	Y	Y	Y	Y	Y				Y		Y								
Stator/Rotor, Exciter Coils	Y	Y	Y				Y	Y											
Castings, stator frame, terminal box and bearing housing etc.	Y	Y	Y	Y	Y			Y											
Fabrication & machining of stator, rotor, terminal box	Y	Y			Y			Y	Y										

NABHA POWER GENERATING CO. PVT. LTD. NPGC

Bharat Heavy Electricals Ltd. Power Sector Marketing New Delhi - 110049

CLAUSE NO.	QUALITY ASSURANCE																		
Wound stator	Y	Y					Y	Y											
Wound Exciter	Y	Y					Y	Y											
Rotor complete	Y	Y					Y						Y	Y					
Exciter, Stator, Rotor, Terminal Box assembly	Y	Y					Y												
Accessories, RTD, BTD,CT, Space heater, antifriction bearing, gaskets etc.	Y	Y	Y																
Complete Motor	Y	Y	Y												Y	Y	Y	Y1	Y

Note: 1. This is an indicative list of tests/checks. The manufacture is to furnish a detailed Quality Plan indicating the practices & Procedure followed along with relevant supporting documents during QP finalization. However, No QP for LT motor upto 50KW.

2. Additional routine tests for Flame proof motors shall be applicable as per relevant standard
3. Makes of major bought out items for HT motors will be subject to NTPC approval.
4. Y1 = for HT Motor / Machines only.

NABINAGAR POWER GENERATING CO. PVT. LTD. * NPGC

Bharat Heavy Electricals Ltd. * Power Sector Marketing * New Delhi - 110049

	TITLE: 3x660 MW NABINAGAR STPP TECHNICAL SPECIFICATION FOR AGITATORS	SPECIFICATION No: PE-TS-457-571-18000-A001	
		SECTION-C, SUB-SECTION-C1D	
		REV. 01	DATE: SEP. 2020
		SHEET : 1 OF 1	

CUSTOMER SPECIFICATION: FUNCTIONAL GUARANTEES

CLAUSE NO.	FUNCTIONAL GUARANTEES AND LIQUIDATED DAMAGES
	FUNCTIONAL GUARANTEES, LIQUIDATED DAMAGES FOR SHORTFALL IN PERFORMANCE AND PERFORMANCE GUARANTEE TESTS
1.00.00	GENERAL
	The term "Performance Guarantees" wherever appears in the Technical Specifications shall have the same meaning and shall be synonymous to "Functional Guarantees". Similarly the term "Performance Tests" wherever appears in the Technical Specifications shall have the same meaning and shall be synonymous to "Guarantee Test(s)".
2.00.00	PERFORMANCE GUARANTEES / PERFORMANCE TESTS
2.01.00	General Requirements
2.01.01	The Contractor shall guarantee that the equipment offered shall meet the ratings and performance requirements stipulated for various equipment covered in these specifications.
2.01.02	The guaranteed performance parameters furnished by the Bidder in his offer, shall be without any tolerance values whatsoever. All margins required for instrument inaccuracies and other uncertainties shall be deemed to have been included in the guaranteed figures. No tolerance or allowance on the test result will be permitted for instrument errors or inaccuracy, the method of testing or any other causes.
2.01.03	The Contractor shall conduct performance test and demonstrate all the guarantees covered herein. The various tests which are to be carried out during performance guarantee tests are listed in this Sub-section. The guarantee tests shall be conducted by the Contractor at site in presence of Employer on each unit individually.
2.01.04	All costs associated with the tests including cost associated with the supply, calibration, installation and removal of the test instrumentation shall be included in the contract price.
2.01.05	The performance tests shall be performed using only the normal number of Employer supplied operating staff. Contractor, vendor or other subcontractor personnel shall be used only for instructional purposes or data collection. At all times during the Performance Tests the emissions and effluents from the Plant shall not exceed the Guaranteed Emission and Effluent Limits.
2.01.06	It shall be responsibility of the Contractor to make the plant ready for the performance guarantee tests.

CLAUSE NO.	FUNCTIONAL GUARANTEES AND LIQUIDATED DAMAGES एनटीपीसी NTPC
2.02.00	**Test Instrumentation, Flow Measurement and their Calibration**
2.02.01	All instruments required for performance testing shall be of the type and accuracy required by the code and prior to the test, the Contractor shall get these instruments calibrated in an independent test Institute approved by the Employer and submit the same to Employer prior to commencement of test. All test instrumentation required for performance tests shall be supplied by the Contractor and shall be retained by him upon satisfactory completion of all such tests at site. All calibration procedures and standards shall be subject to the approval of the Employer prior to commencement of test. The protecting tubes, pressure connections and other test connections required for conducting guarantee test shall conform to the relevant codes. Tools and tackles, thermowells (both screwed and welded) instruments/devices including flow devices, matching flanges, impulse piping & valves etc. and any special equipment, required for the successful completion of the tests, shall be provided by the Contractor free of cost. The Performance test shall be carried out as per the agreed procedure. The detailed PG test procedure shall be submitted within 90 days of the date of Notification of Award and finalization of the PG test procedure shall be done within 180 days from the date of Notification of Award.
2.02.02	The P&G test procedures shall be submitted for equipments/system & subsystem under Contractor's scope for all Guarantees as mentioned below, as per latest International codes / standard including correction curves, meeting the specification requirements along with sample calculations & detailed activity plan of preparation (including test instrumentation), conductance and evaluation of Guarantees.
2.02.03	The Contractor shall submit for Employer's approval the detailed Performance Test procedure containing the following: (a) Object of the test. (b) Various guaranteed parameters & tests as per contract. (c) Method of conductance of test and test code. (d) Duration of test, frequency of readings & number of test runs. (e) Method of calculation. (f) Correction calculations & curves. (g) Instrument list consisting of range, accuracy, least count, and location of instruments.

NABINAGAR POWER GENERATING CO. PVT. LTD. NPGC

Bharat Heavy Electricals Ltd. Power Sector Marketing New Delhi

CLAUSE NO.	FUNCTIONAL GUARANTEES AND LIQUIDATED DAMAGES	एनटीपीसी NTPC
	(h) Scheme showing measurement points.	
	(i) Sample calculation.	
	(j) Acceptance criteria.	
	(k) Any other information required for conducting the test.	
2.03.00	**Test Reports**	
	After the conductance of Performance test, the Contractor shall submit the test evaluation report of Performance test results to Employer promptly but not later than one month from the date of conductance of Performance test. Preliminary test reports shall be submitted to the Employer after completing each test run. Four (4) hard copies and two (2) soft copies on CD-ROM of each test report of final conducted test on each equipment/plant/system shall be submitted to Emp-oyer for approval.	
2.03.01	Performance Guarantee Tests on the equipments/systems not covered in this Sub-section shall be carried out as per the procedure/test codes specified in respective detailed specifications.	
2.04.00	**Acceptance of Guarantee Test Results**	
	(i) **For Category-I Guarantees**	
	In case during performance guarantee test(s) it is found that the equipment/system has failed to meet the guarantees, the Contractor shall carry out all necessary modifications and/or replacements to make the equipment/system comply with the guaranteed requirements at no extra cost to the Employer and re-conduct the performance guarantee test(s) with Employer's consent. In case the specified performance guarantee(s) are still not met but are achieved within the Acceptable Shortfall Limit as specified at **clause 3.00.00** of this sub-section, Employer will accept the equipment/system/plant after levying liquidated damages as per **clause 3.00.00** of this sub-section. However, if, the demonstrated performance guarantee(s) continue to be beyond the stipulated Acceptable Shortfall Limit, even after the above modifications/replacements within ninety (90) days or a reasonable period allowed by the Employer, after the tests have been completed, the Employer will have the right to either of the following:	
	Reject the equipment / system / plant and recover from the Contractor the payments already made	
	OR	

CLAUSE NO.	FUNCTIONAL GUARANTEES AND LIQUIDATED DAMAGES	
	Accept the equipment /system/ plant after levying Liquidated Damages. The liquidated damages for shortfall in performance indicated in clause 3.00.00 of this sub-section shall be levied separately for each unit. The rates indicated in clause 3.00.00 of this sub-section are on per unit basis. The liquidated damages shall be pro-rated for the fractional parts of the deficiencies.	
	(ii) **For Category-II Guarantees**	
	In case during performance guarantee test(s) it is found that the equipment/ system has failed to meet the guarantees, the Contractor shall carry out all necessary modifications and/or replacements to make the equipment/system comply with the guaranteed requirements at no extra cost to the Employer and re-conduct the performance guarantee test(s) with Employer's consent. In case the specified performance guarantee(s) are still not met even after the above modifications/replacements with in ninety (90) days or a reasonable period allowed by the Employer, after the tests have been completed, the Employer will have the right to either of the following:	
	Reject the equipment /system / plant and recover from the Contractor the payments already made.	
	OR	
	Accept the equipment/system after assessing the deficiency in respect of the various ratings, performance parameters and capabilities and recover from the contract price an amount equivalent to the damages as determined by the Employer. Such damages shall, however be limited to the cost of replacement of the equipment(s)/system(s), replacement of which shall remove the deficiency so as to achieve the guaranteed performance. These parameters/capacities shall be termed as "Category-II" Guarantees.	
3.00.00	**AMOUNT OF LIQUIDATED DAMAGES (LD) APPLICABLE FOR GUARANTEES FOR EACH PROJECT**	
	The rate of liquidated damages and acceptable shortfall limits for different guarantees shall be as under and such liquidated damages shall be deducted from the Contract Price of the project.	

CLAUSE NO.	FUNCTIONAL GUARANTEES AND LIQUIDATED DAMAGES	एनटीपीसी NTPC

KUDGI-I (3X800 MW)

Sl.No	Guarantee	Rate of Liquidated Damage (LD)	Acceptable Shortfall Limit with LD
i)	For shortfall in guaranteed SO_2 removal efficiency in percentage points under conditions stipulated in clause 4.01.00 (i) of Sub-Section-VI, Part A, Section-VI.	US $ 63,704/- (US Dollar Sixty Three Thousand Seven Hundred Four only) for every 0.1% point shortfall in SO2 removal efficiency from the guaranteed value.	(-)0.25% point from the guaranteed SO2 removal efficiency
ii)	For increase in the limestone consumption of FGD system in T/hr under conditions stipulated in clause 4.01.00 (ii) of Sub-Section-VI, Part A, Section-VI.	US $ 249,736/- (US Dollar Two Hundred Forty Nine Thousand Seven Hundred Thirty Six only) for every 100 kg/hr increase in Limestone consumption from guaranteed value.	(+)10% of the guaranteed limestone consumption.
iii)	**Auxiliary Power Consumption** For increase in the auxiliary power consumption in KW guaranteed as per the requirements of clause 4.01.00 (iii), of Sub-Section-VI, Part A, Section-VI.	US $ 6032/- (US Dollar Six Thousand Thirty Two Dollars only) for every KW increase in Auxiliary power consumption from the guaranteed value.	(+)1% of the guaranteed auxiliary power consumption

NABHA POWER GENERATING CO. PVT. LTD. NPGC

General Heavy Electricals Pvt. Ltd. Power Sector Marketing Delhi-110003

CLAUSE NO.	FUNCTIONAL GUARANTEES AND LIQUIDATED DAMAGES	एनटीपीसी NTPC

LARA-I (2X800 MW)

Sl.No	Guarantee	Rate of Liquidated Damage (LD)	Acceptable Shortfall Limit with LD
i)	For shortfall in guaranteed SO_2 removal efficiency in percentage points under conditions stipulated in clause 4.01.00 (i) of Sub-Section-VI, Part A, Section-VI.	US $ 63,704/- (US Dollar Sixty Three Thousand Seven Hundred Four only) for every 0.1% point shortfall in SO2 removal efficiency from the guaranteed value	(-)0.25% point from the guaranteed SO2 removal efficiency.
ii)	For increase in the limestone consumption of FGD system in T/hr under conditions stipulated in clause 4.01.00 (ii) of Sub-Section-VI, Part A, Section-VI.	US $ 243,718/- (US Dollar Two Hundred Forty Three Thousand Seven Hundred Eighteen only) for every 100 kg/hr increase in Limestone consumption from guaranteed value.	(+)10% of the guaranteed limestone consumption.
iii)	**Auxiliary Power Consumption** For increase in the auxiliary power consumption in KW guaranteed as per the requirements of clause 4.01.00 (iii), of Sub-Section-VI, Part A, Section-VI.	US $ 2494/- (US Dollar Two Thousand Four Hundred Ninety Four only) for every KW increase in Auxiliary power consumption from the guaranteed value.	(+)1% of the guaranteed auxiliary power consumption

NABINAGAR POWER GENERATING CO. PVT. LTD. NPGC

Bharat Heavy Electricals Ltd. Power Sector Marketing

CLAUSE NO.	FUNCTIONAL GUARANTEES AND LIQUIDATED DAMAGES	एनटीपीसी NTPC

GADARWARA-I (2X800 MW)

Sl.No	Guarantee	Rate of Liquidated Damage (LD)	Acceptable Shortfall Limit with LD
i)	For shortfall in guaranteed SO_2 removal efficiency in percentage points under conditions stipulated in clause 4.01.00 (i) of Sub-Section-VI, Part A, Section-VI.	US $ 63,704/- (US Dollar Sixty Three Thousand Seven Hundred Four only) for every 0.1% point shortfall in SO2 removal efficiency from the guaranteed value	(-)0.25% point from the guaranteed SO2 removal efficiency.
ii)	For increase in the limestone consumption of FGD system in T/hr under conditions stipulated in clause 4.01.00 (ii) of Sub-Section-VI, Part A, Section-VI.	US $ 243,718/- (US Dollar Two Hundred Forty Three Thousand Seven Hundred Eighteen only) for every 100 kg/hr increase in Limestone consumption from guaranteed value.	(+)10% of the guaranteed limestone consumption.
iii)	**Auxiliary Power Consumption** For increase in the auxiliary power consumption in KW guaranteed as per the requirements of clause 4.01.00 (iii), of Sub-Section-VI, Part A, Section-VI.	US $ 2845/- (US Dollar Two Thousand Eight Hundred Forty Five only) for every KW increase in Auxiliary power consumption from the guaranteed value.	(+)1% of the guaranteed auxiliary power consumption

NARMADA POWER GENERATING CO. PVT. LTD. NPGC

CLAUSE NO.	FUNCTIONAL GUARANTEES AND LIQUIDATED DAMAGES	एनटीपीसी NTPC

DARLIPALLI-I (2X800 MW)

Sl.No	Guarantee	Rate of Liquidated Damage (LD)	Acceptable Shortfall Limit with LD
i)	For shortfall in guaranteed SO_2 removal efficiency in percentage points under conditions stipulated in clause 4.01.00 (i) of Sub-Section-VI, Part A, Section-VI.	US $ 63,704/- (US Dollar Sixty Three Thousand Seven Hundred Four only) for every 0.1% point shortfall in SO2 removal efficiency from the guaranteed value	(-)0.25% point from the guaranteed SO2 removal efficiency.
ii)	For increase in the limestone consumption of FGD system in T/hr under conditions stipulated in clause 4.01.00 (ii) of Sub-Section-VI, Part A, Section-VI.	US $ 243,718/- (US Dollar Two Hundred Forty Three Thousand Seven Hundred Eighteen only) for every 100 kg/hr increase in Limestone consumption from guaranteed value.	(+)10% of the guaranteed limestone consumption.
iii)	**Auxiliary Power Consumption** For increase in the auxiliary power consumption in KW guaranteed as per the requirements of clause 4.01.00 (iii), of Sub-Section-VI, Part A, Section-VI.	US $ 2258/- (US Dollar Two Thousand Two Hundred Fifty Eight only) for every KW increase in Auxiliary power consumption from the guaranteed value.	(+)1% of the guaranteed auxiliary power consumption

NABINAGAR POWER GENERATING CO. PVT. LTD. NPGC

Bharat Heavy Electricals Ltd. Power Sector Marketing New Delhi - 110049

CLAUSE NO.	FUNCTIONAL GUARANTEES AND LIQUIDATED DAMAGES	एनटीपीसी NTPC

MOUDA-II (2X660 MW)

Sl.No	Guarantee	Rate of Liquidated Damage (LD)	Acceptable Shortfall Limit with LD
i)	For shortfall in guaranteed SO_2 removal efficiency in percentage points under conditions stipulated in clause 4.01.00 (i) of Sub-Section-VI, Part A, Section-VI.	US $ 52,393/- (US Dollar Fifty Two Thousand Three Hundred Ninety Three only) for every 0.1% point shortfall in SO2 removal efficiency from the guaranteed value	(-)0.25% point from the guaranteed SO2 removal efficiency.
ii)	For increase in the limestone consumption of FGD system in T/hr under conditions stipulated in clause 4.01.00 (ii) of Sub-Section-VI, Part A, Section-VI.	US $ 243,718/- (US Dollar Two Hundred Forty Three Thousand Seven Hundred Eighteen only) for every 100 kg/hr increase in Limestone consumption from guaranteed value.	(+)10% of the guaranteed limestone consumption.
iii)	**Auxiliary Power Consumption** For increase in the auxiliary power consumption in KW guaranteed as per the requirements of clause 4.01.00 (iii), of Sub-Section-VI, Part A, Section-VI.	US $ 3299/- (US Dollar Three Thousand Two Hundred Ninety Nine only) for every KW increase in Auxiliary power consumption from the guaranteed value.	(+)1% of the guaranteed auxiliary power consumption

NABINAGAR POWER GENERATING CO. PVT. LTD. NPGC

Bharat Heavy Electricals Ltd. Power Sector Marketing New Delhi

CLAUSE NO.	FUNCTIONAL GUARANTEES AND LIQUIDATED DAMAGES	एनटीपीसी NTPC

SOLAPUR-I (2X660 MW)

Sl.No	Guarantee	Rate of Liquidated Damage (LD)	Acceptable Shortfall Limit with LD
i)	For shortfall in guaranteed SO_2 removal efficiency in percentage points under conditions stipulated in clause 4.01.00 (i) of Sub-Section-VI, Part A, Section-VI.	US $ 52,393/- (US Dollar Fifty Two Thousand Three Hundred Ninety Three only) for every 0.1% point shortfall in SO2 removal efficiency from the guaranteed value	(-)0.25% point from the guaranteed SO2 removal efficiency.
ii)	For increase in the limestone consumption of FGD system in T/hr under conditions stipulated in clause 4.01.00 (ii) of Sub-Section-VI, Part A, Section-VI.	US $ 243,718/- (US Dollar Two Hundred Forty Three Thousand Seven Hundred Eighteen only) for every 100 kg/hr increase in Limestone consumption from guaranteed value.	(+)10% of the guaranteed limestone consumption.
iii)	**Auxiliary Power Consumption** For increase in the auxiliary power consumption in KW guaranteed as per the requirements of clause 4.01.00 (iii), of Sub-Section-VI, Part A, Section-VI.	US $ 6970/- (US Dollar Six Thousand Nine Hundred Seventy only) for every KW increase in Auxiliary power consumption from the guaranteed value.	(+)1% of the guaranteed auxiliary power consumption

NABINAGAR POWER GENERATING CO. LTD. NPGC

Bharat Heavy Electricals Ltd. Power Sector Marketing New Delhi

CLAUSE NO.	FUNCTIONAL GUARANTEES AND LIQUIDATED DAMAGES	एनटीपीसी NTPC

TANDA-II (2X660 MW)

Sl.No	Guarantee	Rate of Liquidated Damage (LD)	Acceptable Shortfall Limit with LD
i)	For shortfall in guaranteed SO_2 removal efficiency in percentage points under conditions stipulated in clause 4.01.00 (i) of Sub-Section-VI, Part A, Section-VI.	US $ 52,393/- (US Dollar Fifty Two Thousand Three Hundred Ninety Three only) for every 0.1% point shortfall in SO2 removal efficiency from the guaranteed value	(-)0.25% point from the guaranteed SO2 removal efficiency.
ii)	For increase in the limestone consumption of FGD system in T/hr under conditions stipulated in clause 4.01.00 (ii) of Sub-Section-VI, Part A, Section-VI.	US $ 243,718/- (US Dollar Two Hundred Forty Three Thousand Seven Hundred Eighteen only) for every 100 kg/hr increase in Limestone consumption from guaranteed value.	(+)10% of the guaranteed limestone consumption.
iii)	**Auxiliary Power Consumption** For increase in the auxiliary power consumption in KW guaranteed as per the requirements of clause 4.01.00 (iii), of Sub-Section-VI, Part A, Section-VI.	US $ 4831/- (US Dollar Four Thousand Eight Hundred Thirty One only) for every KW increase in Auxiliary power consumption from the guaranteed value.	(+)1% of the guaranteed auxiliary power consumption

NABHA POWER GENERATING CO. PVT. LTD. NPGC

Bharat Heavy Electricals Ltd. Power Sector Marketing Delhi - 110049

CLAUSE NO.	FUNCTIONAL GUARANTEES AND LIQUIDATED DAMAGES	एनटीपीसी NTPC

NABINAGAR JV BIHAR-I (3X660 MW)

Sl.No	Guarantee	Rate of Liquidated Damage (LD)	Acceptable Shortfall Limit with LD
i)	For shortfall in guaranteed SO_2 removal efficiency in percentage points under conditions stipulated in clause 4.01.00 (i) of Sub-Section-VI, Part A, Section-VI.	US $ 52,393/- (US Dollar Fifty Two Thousand Three Hundred Ninety Three only) for every 0.1% point shortfall in SO2 removal efficiency from the guaranteed value	(-)0.25% point from the guaranteed SO2 removal efficiency.
ii)	For increase in the limestone consumption of FGD system in T/hr under conditions stipulated in clause 4.01.00 (ii) of Sub-Section-VI, Part A, Section-VI.	US $ 249,736/- (US Dollar Two Hundred Forty Nine Thousand Seven Hundred Thirty Six only) for every 100 kg/hr increase in Limestone consumption from guaranteed value.	(+)10% of the guaranteed limestone consumption.
iii)	**Auxiliary Power Consumption** For increase in the auxiliary power consumption in KW guaranteed as per the requirements of clause 4.01.00 (iii), of Sub-Section-VI, Part A, Section-VI.	US $ 2484/- (US Dollar Two Thousand Four Hundred Eighty Four only) for every KW increase in Auxiliary power consumption from the guaranteed value.	(+)1% of the guaranteed auxiliary power consumption

NABINAGAR POWER GENERATING CO. PVT. LTD. NPGC

Bharat Heavy Electricals Ltd. Power Sector Marketing New Delhi-110001

CLAUSE NO.	FUNCTIONAL GUARANTEES AND LIQUIDATED DAMAGES	एनटीपीसी NTPC

MEJA JV-I (2X660 MW)

Sl.No	Guarantee	Rate of Liquidated Damage (LD)	Acceptable Shortfall Limit with LD
i)	For shortfall in guaranteed SO_2 removal efficiency in percentage points under conditions stipulated in clause 4.01.00 (i) of Sub-Section-VI, Part A, Section-VI.	US $ 52,393/- (US Dollar Fifty Two Thousand Three Hundred Ninety Three only) for every 0.1% point shortfall in SO2 removal efficiency from the guaranteed value	(-)0.25% point from the guaranteed SO2 removal efficiency.
ii)	For increase in the limestone consumption of FGD system in T/hr under conditions stipulated in clause 4.01.00 (ii) of Sub-Section-VI, Part A, Section-VI.	US $ 243,718/- (US Dollar Two Hundred Forty Three Thousand Seven Hundred Eighteen only) for every 100 kg/hr increase in Limestone consumption from guaranteed value.	(+)10% of the guaranteed limestone consumption.
iii)	**Auxiliary Power Consumption** For increase in the auxiliary power consumption in KW guaranteed as per the requirements of clause 4.01.00 (iii), of Sub-Section-VI, Part A, Section-VI.	US $ 3697/- (US Dollar Three Thousand Six Hundred Ninety Seven only) for every KW increase in Auxiliary power consumption from the guaranteed value.	(+)1% of the guaranteed auxiliary power consumption

NABINAGAR POWER GENERATING CO. PVT. LTD. NPGC

CLAUSE NO.	FUNCTIONAL GUARANTEES AND LIQUIDATED DAMAGES	एनटीपीसी NTPC

BARH-I (3X660 MW)

Sl.No	Guarantee	Rate of Liquidated Damage (LD)	Acceptable Shortfall Limit with LD
i)	For shortfall in guaranteed SO_2 removal efficiency in percentage points under conditions stipulated in clause 4.01.00 (i) of Sub-Section-VI, Part A, Section-VI.	US $ 55,537/- (US Dollar Fifty Five Thousand Five Hundred Thirty Seven only) for every 0.1% point shortfall in SO2 removal efficiency from the guaranteed value	(-)0.25% point from the guaranteed SO2 removal efficiency.
ii)	For increase in the limestone consumption of FGD system in T/hr under conditions stipulated in clause 4.01.00 (ii) of Sub-Section-VI, Part A, Section-VI.	US $ 222,157/- (US Dollar Two Hundred Twenty Two Thousand One Hundred Fifty Seven only) for every 100 kg/hr increase in Limestone consumption from guaranteed value.	(+)10% of the guaranteed limestone consumption.
iii)	**Auxiliary Power Consumption** For increase in the auxiliary power consumption in KW guaranteed as per the requirements of clause 4.01.00 (iii), of Sub-Section-VI, Part A, Section-VI.	US $ 1899/- (US Dollar One Thousand Eight Hundred Ninety Nine only) for every KW increase in Auxiliary power consumption from the guaranteed value.	(+)1% of the guaranteed auxiliary power consumption

NABINAGAR POWER GENERATING CO. LTD. NPGC

Bharat Heavy Electricals Ltd. Power Sector Marketing

CLAUSE NO.	FUNCTIONAL GUARANTEES AND LIQUIDATED DAMAGES	एनटीपीसी NTPC

NABINAGAR JV RLY-I (4X250 MW)

Sl.No	Guarantee	Rate of Liquidated Damage (LD)	Acceptable Shortfall Limit with LD
i)	For shortfall in guaranteed SO_2 removal efficiency in percentage points under conditions stipulated in clause 4.01.00 (i) of Sub-Section-VI, Part A, Section-VI.	US $ 21,045/- (US Dollar Twenty One Thousand Forty Five only) for every 0.1% point shortfall in SO2 removal efficiency from the guaranteed value	(-)0.25% point from the guaranteed SO2 removal efficiency.
ii)	For increase in the limestone consumption of FGD system in T/hr under conditions stipulated in clause 4.01.00 (ii) of Sub-Section-VI, Part A, Section-VI.	US $ 255,904/- (US Dollar Two Hundred Fifty Five Thousand Nine Hundred Four only) for every 100 kg/hr increase in Limestone consumption from guaranteed value.	(+)10% of the guaranteed limestone consumption.
iii)	**Auxiliary Power Consumption** For increase in the auxiliary power consumption in KW guaranteed as per the requirements of clause 4.01.00 (iii), of Sub-Section-VI, Part A, Section-VI.	US $ 2129/- (US Dollar Two Thousand One Hundred Twenty Nine only) for every KW increase in Auxiliary power consumption from the guaranteed value.	(+)1% of the guaranteed auxiliary power consumption

NOTES APPLICABLE FOR EACH PROJECT:

i) Each of the liquidated damages specified above shall be independent and these liquidated damages shall be levied concurrently as applicable.

ii) If the contract currency is other than US dollars, then the liquidated damages shall be in equivalent amount in contract currency based on Bill selling exchange rate of State Bank of India prevailing on the date of award of contract.

CLAUSE NO.	FUNCTIONAL GUARANTEES AND LIQUIDATED DAMAGES

iii) All these liquidated damages for short fall in performance shall be deducted from the contract price as detailed in accompanying General Conditions of Contract (GCC)/ Special Conditions of Contract (SCC)

iv) Contractor's aggregate liability to pay Liqurdated Damages (LD) for failure to attain the functional guarantee shall not exceed twenty five percent (25%) of the Contract Price.

v) The LD values are applicable on per unit basis.

4.00.00 GUARANTEES PARAMETERS

4.01.00 Guarantees Under Category-I

The Performance Guarantees which attract Liquidated Damages (LD) are as follows:

The following shall be guaranteed by the Bidder under guarantee point condition of Sub- Section-V, Part-A of section- VI:

(i) **SO2 removal Efficiency**

The Contractor shall Guarantee that SO_2 removal efficiency at guarantee point (as specified in Clause 1.00.00/2.00.00/3.00.00/4.00.00 Sub-section-V, Part-A of Section-VI applicable for respective project) shall not be less than the value specified under guarantee point conditions (as specified in Clause 1.00.00/2.00.00/3.00.00/4.00.00 Sub-section-V, Part-A of Section-VI applicable for respective project). (To be conducted as per the stipulation of Cl. no. 6.00.00 of this sub-section.)

(ii) **Limestone consumption of FGD system**

Limestone consumption of FGD system in kg/hr under guarantee point conditions (as specified in Clause 1.00.00/2.00.00/3.00.00/4.00.00 Sub-section-V, Part-A of Section-VI applicable for respective project) and SO2 removal efficiency of not less than the value specified under guarantee point conditions (as specified in Clause 1.00.00/2.00.00/3.00.00/4.00.00 Sub-section-V, Part-A of Section-VI applicable for respective project)

(iii) **Auxiliary Power Consumption**

The Contractor shall guarantee the total auxiliary power consumption for the FGD plant in normal operation at the guarantee point conditions, as specified in Clause 1.00.00/2.00.00/3.00.00/4.00.00 Sub-section-V, Part-A of Section-VI applicable for respective project, inline with the requirements stipulated in clause 5.00.00 of this Sub-Section.

CLAUSE NO.	FUNCTIONAL GUARANTEES AND LIQUIDATED DAMAGES एनटीपीसी NTPC
4.02.00	**Guarantees Under Category-II** The parameters/capabilities shall be demonstrated for various systems/ equipments shall include but not limited to the following:- (i) **Wet ball Mill capacity at rated fineness** The contractor shall demonstrate the guaranteed capacity of each limestone pulverizer under the following conditions: i) Limestone fineness : 90% or higher (as per the requirement of the absorber) through 325 mesh. ii) Limestone Quality : All available quality from the specified range. (ii) **Wet ball Mill wear parts guarantee** Contractor shall demonstrate the life of wet ball Mill wear parts in line with requirements stipulated in Part B of the Technical Specification. The establishment of the above guarantee shall be based on the operating records available at the Power station and will be computed for each pulverizer based on actual total hours of operation. (iii) **Wet ball Mill ball consumption** Contractor shall guarantee ball consumption per ton of limestone throughput in line with requirements stipulated in Part B of the Technical Specification. Contractor shall furnish the minimum ball diameter below which the balls shall be replaced. (iv) **Vacuum Belt Filter Capacity** Contractor shall demonstrate the Designed Capacity of the Vaccum Belt Filters to dewater the quantity of gypsum with the specified purity and moisture content as specified in Part B of the Technical Specification. (v) **Gypsum Purity** The contractor shall demonstrate that the purity of the gypsum produced shall not be less than 90%, chloride content shall not be more than 100ppm and the moisture content shall not be more than 10% for guarantee point condition.

CLAUSE NO.	FUNCTIONAL GUARANTEES AND LIQUIDATED DAMAGES	एनटीपीसी NTPC

(vi) **Waste Water**

The Contractor guarantees that the maximum purge flow rate to waste water treatment system for the complete plant shall be $10m^3/hr$ averaged over a 24 hour period from each unit.

(vii) **Performance characteristics of fans (capacity, head developed, etc.).**

(viii) **Margins on fans in case Booster Fan is provided by the Contractor.**

Booster Fans - As specified in Part B of **Technical Specifications**

(ix) **Passenger cum Goods Elevator for FGD absorber & Limestone Grinding Building:** Over load tests, travel and hoist speed checks.

(x) **Noise**

All the plant, equipment and systems covered under this specification shall perform continuously without exceeding the noise level over the entire range of output and operating frequency specified in Part-C of Section-VI of the technical specifications.

Noise level measurement shall be carried out using applicable and internationally acceptable standards. The measurement shall be carried out with a calibrated integrating sound level meter meeting the requirement of IEC 651 or BS 5969 or is 9779.

Sound pressure shall be measured all around the equipment at a distance of 1.0 m horizontally from the nearest surface of any equipment/ machine and at a height of 1.5 m above the floor level in elevation.

A minimum of 6 points around each equipment shall be covered for measurement. additional measurement points shall be considered based on the applicable standards and the size of the equipment. the measurement shall be done with slow response on the a - weighting scale. the average of a-weighted sound pressure level measurements expressed in decibels to a reference of 0.0002 micro bar shall not exceed the guaranteed value. corrections for background noise shall be considered in line with the applicable standards. all the necessary data for determining these corrections, in line with the applicable standards, shall be collected during the tests.

NABHINGAR POWER GENERATING CO. PVT. LTD. NPGC

Bharat Heavy Electricals Ltd. Power Sector Marketing New Delhi - 110049

CLAUSE NO.	FUNCTIONAL GUARANTEES AND LIQUIDATED DAMAGES एनटीपीसी NTPC

(xi) **Mist Outlet Droplet Content**

The mist eliminator outlet droplet content shall be guaranteed to be ≤ 20 mg/Nm3 at absorber outlet measured over a period of 24 hrs continuous operation.

Mist outlet-droplet content shall be measured as per applicable clauses in VDI Norm 3679 and the Contractor shall carry out the tests as per the test procedure approved by the Employer.

(xii) **Availability of FGD Plant**

The Contractor shall guarantee the maximum availability of FGD Plant for the range of coal and limestone specified inline with the requirements stipulated in clause 7.00.00 of this Sub-Section

(xiii) **Air Conditioning System**

A. **Following shall be demonstrated at Shop**

1) Capacity and static pressure of AHU fans at its rated duty point.

B. **Following shall be demonstrated at Site**

1) Capacity (TR) of air cooled condensing units (D-X type) for A/C system of FGD control room building.

2) Guaranteed room conditions during summer for all the Air conditioned areas.

3) Vibration and noise level of condensing units & centrifugal fans of AHUs.

(xiv) **Ventilation System**

A. **Following shall be demonstrated at Shop**

1) Capacity and discharge pressure of pumps of UAF units at its rated duty point of Ventilation system.

2) Capacity and static pressure of UAF fans at its rated duty point of Ventilation system.

B. **Following shall be demonstrated at Site**

1) Vibration & Noise level of centrifugal fans & pumps of UAF units.

(xv) **Compressed Air System**

a) Following shall be demonstrated at shop:

i) Capacity and discharge pressure of each air compressor.

b) Following shall be demonstrated at site:

ii) Dew point of air at the outlet of air drying plants of air compressor.

CLAUSE NO.	FUNCTIONAL GUARANTEES AND LIQUIDATED DAMAGES

iv) Pressure drop across air drying plant .

v) Vibration and noise level of air compressors, blowers of air drying plant (if applicable)

xvi) **Equipment Cooling Water System**

i) Vibration, noise and parallel operation without hunting & abnormal noise and with flow sharing within 10% of each other at the rated duty point shall be demonstrated at site.

ii) Design heat load of plate type heat exchangers and Inlet & Outlet temperatures of the Plate type heat exchangers on the primary and secondary side to be demonstrated at site. Pressure drop across the Plate type heat exchanger on the primary & secondary water circuit to be demonstrated at site.

xvii) **Waste Water Treatment System (Applicable for Barh-I (3X660 MW) & Nabinagar (4x250 MW)**

The Contractor shall guarantee the followings.

A). Wastewater treatment capacity(m^3/hr) : ≥ 30 for Barh-I (3X660 MW)

B). Wastewater treatment capacity(m^3/hr) : ≥ 20 for Nabinagar (4x250 MW)

C). Operating time : 16hr for Pre-treatment process, 24hr for Evaporation process

D). The distillate quality (Evaporator and crystallizer combined) shall be a maximum of 50 ppm TDS at 120 °F, while the solids produced for disposal which will pass the paint filter test.

5.00.00 **AUXILIARY POWER CONSUMPTION (PA) FOR EACH PROJECT**

The unit auxiliary power consumption shall be calculated using the following relationship.

$P_a = P_u + T_L$

P_a = Guaranteed Auxiliary Power Consumption.

P_u = Power consumed by the auxiliaries of the unit under test.

T_L = Losses of the transformers supplied by bidder based on works test reports.

While guaranteeing the auxiliary power consumption of each project the bidder shall necessarily include all continuously operating auxiliaries under this package. The auxiliaries to be considered shall include but not be limited to the following:

CLAUSE NO.	FUNCTIONAL GUARANTEES AND LIQUIDATED DAMAGES एनटीपीसी NTPC
	i. Absorber Recirculation Pump(s)/Gas Cooling Pumps ii. Absorber Oxidation Air Blower(s) iii. Absorber Oxidation Tank Agitator(s) iv. Gypsum Bleed Pump v. Limestone Gravimetric feeder, Wet ball mill and their integral Auxiliaries divided by the number of units in the project vi. Limestone Slurry Pump vii. Vacuum Belt Filter, Vacuum Pump and its integral auxiliaries divided by the number of units in the project viii. Power consumption of Booster water pump (if provided) divided by the number of units in the project. ix. Process water pump(s) divided by the number of units in the project x. Mist Eliminator Wash Water pump(s) xi. Power consumption of Belt Filter Wash Water Pump divided by the number of units in the project xii. DM Cooling (normally working) Water pump one(1) to supply cooling water on the primary (DM) side of the plate type heat exchangers in the closed loop Equipment cooling water system. xiii. Auxiliary Cooling (normally working) water pump one(1) to supply cooling water on the secondary side of the plate type heat exchangers in the closed loop Equipment cooling (unit auxiliary) water system. xiv. Booster Fans xv. Power consumption of Limestone Slurry Tank Agitator(s) divided by the number of units in the project xvi. Power consumption of Filtrate Pump divided by the number of units in the project xvii. Power consumption of Belt Filter Wash Water Pump divided by the number of units in the project xviii. Power consumption of Cloth Wash Water Pump divided by the number of units in the project

CLAUSE NO.	FUNCTIONAL GUARANTEES AND LIQUIDATED DAMAGES एनटीपीसी NTPC

xix. Power consumption of Hydro-cyclone and Waste Water Pump divided by the number of units in the project

xx. Power consumption of all other continuous running Agitators divided by the number of units in the project

xxi. Air Conditioning System (*)

Total Power consumption at motor input terminals of working units (i.e. excluding stand-by) at its rated duty point of compressor and condenser fans of air cooled condensing unit, Air handling unit (AHU) fans for the Air conditioning system of FGD Control Room Building and ZLD Control Room Building (if provided) divided by total nos. of units in respective project..

xxii Total power consumption at motor input terminal at rated duty of fan of UAF divided by total nos. of units in respective project. (*)

((*) Above guaranteed power consumption values shall be at 20 deg C for centrifugal fans of AHUs and at 30 deg C for centrifugal fans of air washer units and at an elevation of RL (+) - m for both AHUs and Air washer unit centrifugal fans.)

xxiii Total power consumption at motor input terminal at rated duty of Air compressor, Air drying plant (Heater and blower, as applicable) divided by total nos. of units in respective project

xxiv. Power consumption of Evaporator feed pump divided by the number of units in the project, in case ZLD system is provided

xxv. Power consumption of Evaporator/Brine concentrator recirculation pump divided by the number of units in the project, in case ZLD system is provided

xxvi. Power consumption of Distillate pump divided by the number of units in the project, in case ZLD system is provided

xxvii. Power consumption of Crystalliser feed pump divided by the number of units in the project, in case ZLD system is provided

xxviii. Power consumption of Crystalliser recirculation pump divided by the number of units in the project, in case ZLD system is provided

xxix. Power consumption of Mechanical vapour Compressor divided by the number of units in the project, in case ZLD system is provided

The equipment's listed above for calculating auxiliary power consumption are indicative. Any other equipment required for continuous operation of the system shall also be considered for calculation of auxiliary power consumption. Power consumption of all equipments provided on unitized basis shall be included in the unit auxiliary power consumption. For common station auxiliaries the power

NABINAGAR POWER GENERATING CO. PVT. LTD. NPGC

Bharat Heavy Electricals Limited Power Sector Marketing New Delhi-110049

consumption shall be assigned to each unit based on unit load for the purpose of calculating the unit auxiliary power consumption.

Note :

1. The bidder shall furnish a list of equipments to be covered under auxiliary power consumption, which shall be subject to Employer's approval.
2. The equipments listed above for calculating auxiliary power consumption are indicative. Any other equipment required for continuous operation of the system shall also be considered for calculation of auxiliary power consumption.

6.00.00 **METHOD OF COMPUTING TEST EFFICIENCY OF FGD**

The performance tests shall be carried out in accordance with ASME PTC 40 (1991) code. No tolerance or allowance on the test result will be permitted for instrument errors or inaccuracy, the method of testing or any other causes. The details of the test shall, however be mutually agreed upon between the employer and the contractor.

7.00.00 **METHOD OF COMPUTING AVAILABILITY**

The Contractor shall guarantee 98 % availability of FGD plant including waste water treatment system for Zero Liquid Discharge (ZLD), wherever provided, for a continuous period of 120 days. An availability guarantee test shall be conducted to assure this level of availability for a period of 240 days as per the procedure indicated below.

Availability 'A' in %:

$$A = \frac{Tc \times 100\%}{Tk}$$

Tc – recorded time of FGD operation, expressed in hours,

Tk – recorded time of boiler operation, expressed in hours,

However, it is required that:

(i) In order to calculate the FGD availability, operation hours will be counted except boiler start-ups when the operation hours counting will start on the moment of shut down of all oil burners,

(ii) FGD will be regarded as a FGD in operation, when by-pass damper is closed and total flow of flue gas from boiler goes via FGD, and SO_2

content is below 100 mg/Nm3 (dry basis at 6% O_2) in cleaned flue gas for the range of specified coals & loads.

(iii) If FGD is out of operation during the boiler operation time as a result of the Employer's decision, this time will not be counted as boiler operation time for calculating the FGD availability,

(iv) Boiler operation hours will be counted based on the recorded boiler operation hours and the recorded data will be made available to the Contractor by the Employer.

Mandatory spares have been identified in the Employer. Contractor can use the mandatory spares supplied under the contract during this period in agreement with the Employer. However, if other additional spares are required for demonstration of availability demonstration guarantee, Bidder to should clearly indicate along with their offer.

If the calculated availability after 120 days availability test is lower than the guaranteed value, the Contractor will undertake actions as per clause 2.04.00 (ii) of this Sub-Section to achieve the guaranteed availability.

NABINAGAR POWER GENERATING CO. PVT. LTD. NPGC

Bharat Heavy Electricals Ltd. Power Sector Marketing New Delhi - 110049

	TITLE: 3x660 MW NABINAGAR STPP TECHNICAL SPECIFICATION FOR AGITATORS	SPECIFICATION No: PE-TS-457-571-18000-A001	
		SECTION-I, SUB-SECTION-C2C	
		REV. 01	DATE: SEP. 2020
		SHEET : 1 OF 1	

CUSTOMER SPECIFICATION: PAINTING SPECIFICATION

	PAINTING SPECIFICATION TO BE FOLLOWED BY BIDDERS FOR AGITATORS
13.06.00	
14.00.00	**SPECIFICATION FOR SURFACE PREPARATION & PAINTING**
14.01.00	Surface preparation methods and paint/primer materials shall be of the type specified herein. If the contractor desires to use any paint/primer materials other than that specified, specific approval shall be obtained by the contractor in writing from the employer for using the substitute material.
14.02.00	All paints shall be delivered to job site in manufacturers sealed containers. Each container shall be labeled by the manufacturer with the manufacturer's name, type of paint, batch number and color.
14.03.00	Unless specified otherwise, paint shall not be applied to surfaces of insulation, surfaces of stainless steel/nickel/ copper/brass/ monel/ aluminum/ hastelloy/lead/ galvanized steel items, valve stem, pump rods, shafts, gauges, bearing and contact surfaces, lined or clad surfaces.
14.04.00	All pipelines shall be Colour coded for identification as per the NTPC Colour-coding scheme, which will be furnished to the contractor during detailed engineering..
14.05.00	**SURFACE PREPARATION**
14.05.01	All surfaces to be painted shall be thoroughly cleaned of oil, grease and other foreign matter. Surfaces shall be free of moisture and contamination from chemicals and solvents.
14.05.02	The following surface schemes are envisaged here. Depending upon requirement any one or a combination of these schemes may be used for surface preparation before application of primer.

SP1	Solvent cleaning
SP2	Application of rust converter (Ruskil or equivalent grade)
SP3	Power tool cleaning
SP4	Shot blasting (shot blasting shall be used as surface preparation method for hot worked pipes prior to application of primer)
SP4*	Shot blast cleaning/ abrasive blast cleaning to SA21/2 (near white metal) 35-50 microns
SP5	Phosphating
SP6	Emery sheet cleaning/Manual wire brush cleaning.

CLAUSE NO.	TECHNICAL REQUIREMENTS

14.06.00 **APPLICATION OF PRIMER/PAINT**

14.06.01 The paint/primer manufacturer's instructions covering thinning, mixing, method of application, handling and drying time shall be strictly followed and considered as part of this specification. The Dry film thickness (DFT) of primer/paint shall be as specified herein.

14.06.02 Surfaces prepared as per the surface preparation scheme indicated herein shall be applied with primer paint within 6 hours after preparation of surfaces.

14.06.03 Where primer coat has been applied in the shop, the primer coat shall be carefully examined, cleaned and spot primed with one coat of the primer before applying intermediate and finish coats. When the primer coat has not been applied in the shop, primer coat shall be applied by brushing, rolling or spraying on the same day as the surface is prepared. Primer coat shall be applied prior to intermediate and finish coats.

14.06.04 Steel surfaces that will be concealed by building walls shall be primed and finish painted before the floor is erected. Tops of structural steel members that will be covered by grating shall be primed and finish painted before the grating is permanently secured.

14.06.05 Following are the Primer/painting schemes envisaged herein:

PS3	-	Zinc Chrome Primer (Alkyd base) by brush/Spray to IS104.
PS3*	-	Zinc Chrome primer (Alkyd base) by dip coat.
PS4	-	Synthetic Enamel (long oil alkyd) to IS2932.
PS5	-	Red oxide zinc phosphate to IS-12744.
PS9	-	Aluminum paint to IS 2339.
PS9*	-	Heat resistant Aluminum paint to IS-13183 Gr.-I (for temperature 400 ^{o}C - 600 ^{o}C) , IS-13183 Gr.-II (for temperature 200°C - 400°C) and IS-13183 Gr.-III (for temperature upto 200 ^{o}C)
PS13	-	Rust preventive fluid by spray, dip or brush.
PS14	-	weldable primer-Deoxaluminate or equivalent.
PS16	-	High Build Epoxy CDC mastic `15' .
PS17	-	Aliphatic Acrylic Polyurethane CDE134 ,%V=40.0(min.)
PS18	-	Epoxy based TiO2 pigmented coat
PS19	-	Epoxy based Zinc phosphate primer (92% zinc in dry film (min.), %VS=35.0(min.).
PS20	-	Epoxy based finish paint.

14.06.06 All weld edge preparation for site welding shall be applied with one coat of weldable primer.

14.06.07 For internal protection of pipes/tubes, VCI pellets shall be used at both ends after sponge testing and ends capped. VCI pellets shall not be used for SS components and composite assemblies.

14.07.00 **Primer/Painting Schedule**

Sl. No	Description		Surface Preparation	Primer Coat			Intermediate Coat			Finish Coats			Total Min. Painting DFT (Microns)	Colour Shade
				System	Coat	Min. DFT / coat (Microns)	System	Coat	Min. DFT/ Coat (Microns)	System	Coat	Min. DFT/ Coat (Microns)		
1.	All **insulated** Pipings, fittings/ components, Pipe clamps, Vessels/Tanks, Equipments etc.		SP3/SP4	PS 9*	1	20	-	-	-	PS9*	1	20	40	As per NTPC Colour shade/ coding scheme
2.	All **uninsulated** Piping, fittings/ components, Pipe clamps, Vessels/Tanks, Equipments etc.	Design temperature <60 ^{o}C	SP3/SP4	PS 5	1	20	-	-	-	PS 4	3 $	35 $	155 $	
		Design temperature 60 ^{o}C-200 ^{o}C	SP3/SP4	PS 9*	1	20				PS 9*	1	20	40	
		Design temperature > 200 ^{o}C	SP3/SP4	PS9*	1	20	-	-	-	PS9*	1	20	40	
3	Constant Load **Hanger** (CLH), Variable Load Hanger (VLH) and other supports		SP4*	PS19	1	40	-	-	-	PS17	1	30	70	
4.	**Valves**													
	Cast /Forged	Design temperature <60°C	SP1/SP2/ SP3	PS9	1	20	PS9	1	100	PS 9	1	20	40	

		Design temperature 60 °C-200 °C	SP1/SP2/ SP3	PS9*	1	20	-	-	-	PS9*	1	20	40	
		Design temperature > 200 °C	SP1/SP2/ SP3	PS9*	1	20				PS9*	1	20	40	
5.	All Structural Steel components	Outside TG building and in SG envelope	SP4*	Inorganic Ethyl Zinc Silicate	1	75	PS18	1	75	a))Epoxy coat b)Final coat of paint PS17	2 1	35 30	250	
		Within TG building	SP4*	-do-	1	35	PS18	1	35	a))Epoxy coat b)Final coat of paint PS17	2 1	25 30	150	
6.	Weld Edges		SP6 (Hand cleaning by wire brushing)	PS13 (Weldable primer)	1	25	-	-	-	-	-	-	-	

$ The first 2 finished coats (total min.DFT of 70 microns) shall be done at shop and the 3rd finish coat (min.DFT 35 Microns) shall be applied at site.

15.00.00 Testing Requirements:

The detailed testing requirements for power cycle piping and its components are given in the subsection for Quality Assurance(QA) .The requirements pertaining to testing given in this subsection if in variance with that given in QA subsection, then the more stringent of the two shall be followed.

83819/2020/PS-PEM-MAX

RANIPET	**Bharat Heavy Electricals Limited** **Boiler Auxiliaries Plant** **Ranipet – 632 406**	**BHEL DOC NO.**	**PS: NN FGD: : G609**
		REVISION NO.	**02**
		DATE	**06.12.2019**

NABINAGAR FGD PACKAGE

PAINTING SCHEME for FGD SYSTEM, BOOSTER FAN& GATES& DAMPERS

NTPC CONTRACT NO: CS-0370-109-(1A) -2-FC -NOA-0059

NTPC DRG NO: 0370-109-PVM-H-001

BHEL RANIPET Customer No(s).: G609-G611

Prepared By	Reviewed & Approved By
	Signature Not Verified Digitally signed by P S Chowdhury Date: 2019.12.20 09:50:32 IST Reason: CAT I
Rajamanickam M **Dy.Manager/QA**	**K.C. Ga[illegible]le**

Note: 1) For **PGMAs of Agitator and and its sub-components shall be the same as that of similar items provided in the list. For Example, for motor, gear box, coupling etc. which are applicable for agitators PGMA-FW 212 & FW 701 are to be followed.**

2) Painting : Painting details in the specification are minimum requirement. Painting shall be as per customer approved schedule to be submitted by successful bidder during detail engineering.

Sl No	SURFACE LOCATION	PGMA	SURFACE PREPARATION	PRIMER		FINISH		TOTAL DFT IN (µm min.)
				PAINT	DFT (µm min.)	PAINT	DFT (µm min.)	

RECORD OF REVISION

REV NO	DATE	DETAILS OF REVISION
00	25.10.2019	Original Issue - First Submission
01	18.11.2019	**NTPC comments:** BHEL has got approved painting schedule for other projects with same spec which may please be endorsed. **BHEL reply:** We wish to submit that we have got approved painting scheme for other projects with same spec but the PGMAs will vary from one project to another depending upon the size and scope. Hence we request you to kindly consider and approve the painting scheme developed for this project.
		NTPC comments: Please include Painting Schedule for Limestone & Gypsum Handling System equipment. **BHEL reply:** We wish to submit that this painting scheme is intended only for Ranipet scope of supply. The scope of the items referred in the comments are given by ISG group. Painting scheme for ISG scope of supply will be submitted separately by them as their PGMAs are different and paint selection will be different based on the intricacies of their product. Also FGD is a system supplied by seven units of BHEL similair to SG and TG package. Therefore, we request you to kindly consider and approve this painting scheme for Ranipet scope of supply.
02	06.12.2019	**NTPC comments:** no electrical items like motors, switchgear etc.,are covered in this document??? where are they covered? **BHEL reply:** This painting scheme covers painting for manufacturing items, Electrical items like motors, switchgears etc are bought out items and the painting is covered in the respective drawings itself which are submitted to NTPC for approval. Painting as per NTPC specification is given in the drawings. This is the practice which is followed for SG and TG packages as well. We request you to kindly approve the document.
		NTPC comments: will there be as many documents as the no of units of BHEL? **BHEL reply:** Other than BAP, Ranipet, separate paining schedule will only be submitted by ISG as the manufacturing items are available for them. Other units cover the painting in the drawing itself which will be submitted to NTPC for approval as they deal with bought out items more. We request you to kindly approve the painting schedule.

Sl No	SURFACE LOCATION	PGMA	SURFACE PREPARATION	PRIMER		FINISH		TOTAL DFT IN (µm min.)
				PAINT	DFT (µm min.)	PAINT	DFT (µm min.)	

1. FANS

1	Axial Fan tool & fixtures **(Clause 20.03.00 of Part- C Section VI)**	55 000	Power Tool Cleaning to st3 (SSPC-SP3)	Red Oxide Zinc Phosphate Primer to IS: 12744 (Two coats)	60	Synthetic Enamel to IS 2932 Shade: Grey white RAL 9002 (Two coats)	40	100
2	Booster Fan foundation material	55 081	Temporary rust preventive fluid application as per PRQA 523 DFT- 20µ All Threaded and other surfaces of foundation bolt and its materials shall be coated with temporary rust preventive fluid. During execution of civil works the dried film of coating will be removed using Organic Solvents.					
3	Booster Fan Handrails & Insert **(Clause 31.06.00 of Sec.VI, Part-B, Subsection- IV-D)**	55 082	Blast cleaning to Sa 2½/ Acid pickling	Hand rails, Gratings- Hot dip galvanizing to 610gms/sq.m (minimum) and to a coating thickness of 87µm (min).				
4	Booster Fan Handrails & Insert- Structural items other than the above **(Clause 31.03.00 of Sec.VI, Part-B, Subsection- IV-D)**	55 082	Blast cleaning to Sa 2½ (Near white metal) with surface profile 40-60µm conforming to ISO 8501-1	Primer: One coat of Two component moisture curing zinc (ethyl) silicate primer coat (Min 80% metallic zinc content in dry film, solid by volume minimum 60% ±2). Zinc dust composition and properties shall be as per Type II as per ASTM D520-00 DFT- 70µ Intermediate: One coat of Two component polyamide cured epoxy with MIO content (containing lamellar MIO Min 30% on pigment, solid by volume min. 80%±2) DFT- 100µ	70 100	Finish: Two coats of two pack aliphatic isocyanate cured acrylic polyurethane paint to IS 13213 solid by volume min.55%±2) DFT- 35µ/ coat Shade: Grey white, RAL 9002 With gloss retention (SSPC paint spec no.36, ASTM D4587, D2244, D523 of level 2 after min. 1000 hrs exposure, gloss less than 30 and colour change less than 2.0Δ E)	70	240
5	Axial booster cooling/ seal fan **(Clause 1.04.00 of Part- A Section VI)**	55 084	Blast cleaning to Sa 2½	**Primer:** Two coats of Epoxy resin based Epoxy Zinc phosphate primer to IS 13238 DFT- 50µ/coat	100	**Finish:** One coat of Epoxy based finish paint to IS 14209; DFT- 75µ	75	300

Sl No	SURFACE LOCATION	PGMA	SURFACE PREPARATION	PRIMER		FINISH		TOTAL DFT IN (µm min.)
				PAINT	DFT (µm min.)	PAINT	DFT (µm min.)	
				Intermediate: One coat of Two component epoxy based intermediate paint pigmented with MIO/Tio2 DFT- 100µ	100	**Finish:** One coat of acrylic aliphatic polyurethane paint to IS 13213 DFT-25µ Shade: Grey White, RAL9002	25	
6	Booster fan canopy for motor **(Clause 1.04.00 of Part- A Section VI)**	55 089	Blast cleaning to Sa 2½	**Primer:** Two coats of Epoxy resin based Epoxy Zinc phosphate primer to IS 13238 DFT- 50µ/coat **Intermediate:** One coat of Two component epoxy based intermediate paint pigmented with MIO/Tio2 DFT- 100µ	100 100	**Finish:** One coat of Epoxy based finish paint to IS 14209; DFT- 75µ **Finish:** One coat of acrylic aliphatic polyurethane paint to IS 13213 DFT-25µ Shade: Grey White, RAL9002	75 25	300
7	Axial booster fan rotor **(Clause 20.03.00 of Part- C Section VI)**	55 287	Power Tool Cleaning to St3 (SSPC-SP3)	Two coats of Epoxy based Zinc phosphate primer (Two pack system) to IS 13238; DFT- 30µ/coat	60	NIL	--	60
8	Axial booster fan stator **(Clause 20.03.00 of Part- C Section VI)**	55 587	Power Tool Cleaning to St3 (SSPC-SP3)	Red Oxide Zinc Phosphate Primer to IS: 12744 (Two coats)	60	Synthetic Enamel to IS 2932 Shade: Grey white RAL 9002 (Two coats)	40	100
9	Axial booster fan coupling **(Clause 1.04.00 of Part- A Section VI)**	55 880	Blast cleaning to Sa 2½	**Primer:** Two coats of Epoxy resin based Epoxy Zinc phosphate primer to IS 13238 DFT- 50µ/coat **Intermediate:** One coat of Two component epoxy based intermediate paint pigmented with MIO/Tio2 DFT- 100µ	100 100	**Finish:** One coat of Epoxy based finish paint to IS 14209; DFT- 75µ **Finish:** One coat of acrylic aliphatic polyurethane paint to IS 13213 DFT-25µ Shade: Grey White, RAL9002	75 25	300

Sl No	SURFACE LOCATION	PGMA	SURFACE PREPARATION	PRIMER		FINISH		TOTAL DFT IN (µm min.)
				PAINT	DFT (µm min.)	PAINT	DFT (µm min.)	
10	Booster fan LOS with lubricant **(Clause 1.04.00 of Part- A Section VI)**	55 980	Blast cleaning to Sa 2½	**Primer:** Two coats of Epoxy resin based Epoxy Zinc phosphate primer to IS 13238 DFT- 50µ/coat **Intermediate:** One coat of Two component epoxy based intermediate paint pigmented with MIO/Tio2 DFT- 100µ	100 100	**Finish:** One coat of Epoxy based finish paint to IS 14209; DFT- 75µ **Finish:** One coat of acrylic aliphatic polyurethane paint to IS 13213 DFT-25µ Shade: Grey White, RAL9002	75 25	300
11	Booster fan actuator **(Clause 1.04.00 of Part- A Section VI)**	55 983	Blast cleaning to Sa 2½	**Primer:** Two coats of Epoxy resin based Epoxy Zinc phosphate primer to IS 13238 DFT- 50µ/coat **Intermediate:** One coat of Two component epoxy based intermediate paint pigmented with MIO/Tio2 DFT- 100µ	100 100	**Finish:** One coat of Epoxy based finish paint to IS 14209; DFT- 75µ **Finish:** One coat of acrylic aliphatic polyurethane paint to IS 13213 DFT-25µ Shade: Grey White, RAL9002	75 25	300

Sl No	SURFACE LOCATION	PGMA	SURFACE PREPARATION	PRIMER		FINISH		TOTAL DFT IN (µm min.)
				PAINT	DFT (µm min.)	PAINT	DFT (µm min.)	

2. FGD SYSTEM

1	Slurry recirculation pump System **(Referred from cl. 7.05.00 of Section-VI, Part-B, Sub section-I-M5)**	FW 212	Power Tool Cleaning to St3 (SSPC-SP3)	Primer: Red Oxide Zinc Phosphate Primer to IS: 12744 (Two coats) Intermediate: One coat of Synthetic Enamel intermediate coat to IS 2932; DFT- 50µ	60 50	Two coats of Synthetic Enamel to IS 2932, DFT- 50µ/ coat Shade: Light blue RAL 5012	100	210
2	Absorber System Internals – Structural items **(Clause 1.04.00 of Part- A Section VI)**	FW 213	Blast cleaning to Sa 2½	**Primer:** Two coats of Epoxy resin based Epoxy Zinc phosphate primer to IS 13238 DFT- 50µ/coat **Intermediate:** One coat of Two component epoxy based intermediate paint pigmented with MIO/Tio2 DFT- 100µ	100 100	**Finish:** One coat of Epoxy based finish paint to IS 14209; DFT- 75µ **Finish:** One coat of acrylic aliphatic polyurethane paint to IS 13213 DFT-25µ Shade: Grey White, RAL9002	75 25	300
3	Mist eliminator and accessories, Absorber baffle grating support, Mist eliminator support& Absorber Spray pipe support - Structural items **(Clause 1.04.00 of Part- A Section VI)**	FW 215 FW 216 FW 217 FW 218	Blast cleaning to Sa 2½	**Primer:** Two coats of Epoxy resin based Epoxy Zinc phosphate primer to IS 13238 DFT- 50µ/coat **Intermediate:** One coat of Two component epoxy based intermediate paint pigmented with MIO/Tio2 DFT- 100µ	100 100	**Finish:** One coat of Epoxy based finish paint to IS 14209; DFT- 75µ **Finish:** One coat of acrylic aliphatic polyurethane paint to IS 13213 DFT-25µ Shade: Grey White, RAL9002	75 25	300
4	Absorber System- Base **(Clause 31.03.00 of Sec.VI, Part-B, Subsection- IV-D)**	FW 219	Blast cleaning to Sa 2½ (Near white metal) with surface profile 40-60µm	Primer: One coat of Two component moisture curing zinc (ethyl) silicate primer coat (Min 80% metallic zinc content in dry film, solid by volume minimum 60% ±2). Zinc dust composition	70	Finish: Two coats of two pack aliphatic isocyanate cured acrylic polyurethane paint to IS 13213 solid by volume min.55%±2) DFT- 35µ/ coat	70	240

Sl No	SURFACE LOCATION	PGMA	SURFACE PREPARATION	PRIMER		FINISH		TOTAL DFT IN (µm min.)
				PAINT	DFT (µm min.)	PAINT	DFT (µm min.)	
			conforming to ISO 8501-1	and properties shall be as per Type II as per ASTM D520-00 DFT- 70µ Intermediate: One coat of Two component polyamide cured epoxy with MIO content (containing lamellar MIO Min 30% on pigment, solid by volume min. 80%±2) DFT- 100µ	100	Shade: Grey white, RAL 9002 With gloss retention (SSPC paint spec no.36, ASTM D4587, D2244, D523 of level 2 after min. 1000 hrs exposure, gloss less than 30 and colour change less than 2.0Δ E)		
5	Absorber system structures, Absorber shear plate, Duct supports, Structures for RC pump house& Hook up duct structure **(Clause 31.03.00 of Sec.VI, Part-B, Subsection- IV-D)**	FW 220 FW 231 FW 232 FW 233 FW 234 FW 236 FW 238	Blast cleaning to Sa 2½ (Near white metal) with surface profile 40-60µm conforming to ISO 8501-1	Primer: One coat of Two component moisture curing zinc (ethyl) silicate primer coat (Min 80% metallic zinc content in dry film, solid by volume minimum 60% ±2). Zinc dust composition and properties shall be as per Type II as per ASTM D520-00 DFT- 70µ Intermediate: One coat of Two component polyamide cured epoxy with MIO content (containing lamellar MIO Min 30% on pigment, solid by volume min. 80%±2) DFT- 100µ	70 100	Finish: Two coats of two pack aliphatic isocyanate cured acrylic polyurethane paint to IS 13213 solid by volume min.55%±2) DFT- 35µ/ coat Shade: Grey white, RAL 9002 With gloss retention (SSPC paint spec no.36, ASTM D4587, D2244, D523 of level 2 after min. 1000 hrs exposure, gloss less than 30 and colour change less than 2.0Δ E)	70	240
6	Absorber system casing bottom- Outside surfaces **(Clause 31.03.00 of Sec.VI, Part-B, Subsection- IV-D)**	FW 221	Blast cleaning to Sa 2½ (Near white metal) with surface profile 40-60µm conforming to ISO 8501-1	Primer: One coat of Two component moisture curing zinc (ethyl) silicate primer coat (Min 80% metallic zinc content in dry film, solid by volume minimum 60% ±2). Zinc dust composition and properties shall be as per Type II as per ASTM D520-00 DFT- 70µ	70	Finish: Two coats of two pack aliphatic isocyanate cured acrylic polyurethane paint to IS 13213 solid by volume min.55%±2) DFT- 35µ/ coat Shade: Grey white, RAL 9002 With gloss retention (SSPC paint spec no.36, ASTM	70	240

Sl No	SURFACE LOCATION	PGMA	SURFACE PREPARATION	PRIMER		FINISH		TOTAL DFT IN (µm min.)
				PAINT	DFT (µm min.)	PAINT	DFT (µm min.)	
	Inside surfaces are of C276 cladded sheets, hence no paint is envisaged.			Intermediate: One coat of Two component polyamide cured epoxy with MIO content (containing lamellar MIO Min 30% on pigment, solid by volume min. 80%±2) DFT- 100µ	100	D4587, D2244, D523 of level 2 after min. 1000 hrs exposure, gloss less than 30 and colour change less than 2.0Δ E)		
7	Absorber system casing top- Outside surfaces **(Clause 31.03.00 of Sec.VI, Part-B, Subsection- IV-D)** Inside surfaces are of C276 cladded sheets, hence no paint is envisaged.	FW 222	Blast cleaning to Sa 2½ (Near white metal) with surface profile 40-60µm conforming to ISO 8501-1	Primer: One coat of Two component moisture curing zinc (ethyl) silicate primer coat (Min 80% metallic zinc content in dry film, solid by volume minimum 60% ±2). Zinc dust composition and properties shall be as per Type II as per ASTM D520-00 DFT- 70µ Intermediate: One coat of Two component polyamide cured epoxy with MIO content (containing lamellar MIO Min 30% on pigment, solid by volume min. 80%±2) DFT- 100µ	70 100	Finish: Two coats of two pack aliphatic isocyanate cured acrylic polyurethane paint to IS 13213 solid by volume min.55%±2) DFT- 35µ/ coat Shade: Grey white, RAL 9002 With gloss retention (SSPC paint spec no.36, ASTM D4587, D2244, D523 of level 2 after min. 1000 hrs exposure, gloss less than 30 and colour change less than 2.0Δ E)	70	240
8	Absorber system accessories **(Clause 20.03.00 of Part- C Section VI)**	FW 223	Power Tool Cleaning to St3 (SSPC-SP3)	Red Oxide Zinc Phosphate Primer to IS: 12744 (Two coats)	60	Synthetic Enamel to IS 2932 Shade: Grey white RAL 9002 (Two coats)	40	100
9	Emergency Quench water tank- Outside surfaces **(Clause 31.03.00 of Sec.VI, Part-B, Subsection- IV-D)**	FW 226	Blast cleaning to Sa 2½ (Near white metal) with surface profile 40-60µm conforming to ISO 8501-1	Primer: One coat of Two component moisture curing zinc (ethyl) silicate primer coat (Min 80% metallic zinc content in dry film, solid by volume minimum 60% ±2). Zinc dust composition and properties shall be as per Type II as per ASTM D520-00 DFT- 70µ	70	Finish: Two coats of two pack aliphatic isocyanate cured acrylic polyurethane paint to IS 13213 solid by volume min.55%±2) DFT- 35µ/ coat Shade: Grey white, RAL 9002	70	240

Sl No	SURFACE LOCATION	PGMA	SURFACE PREPARATION	PRIMER		FINISH		TOTAL DFT IN (µm min.)
				PAINT	DFT (µm min.)	PAINT	DFT (µm min.)	
				Intermediate: One coat of Two component polyamide cured epoxy with MIO content (containing lamellar MIO Min 30% on pigment, solid by volume min. 80%±2) DFT- 100µ	100	With gloss retention (SSPC paint spec no.36, ASTM D4587, D2244, D523 of level 2 after min. 1000 hrs exposure, gloss less than 30 and colour change less than 2.0Δ E)		
10	Emergency Quench water tank- Inside surfaces	FW 226	Blast cleaning to Sa 2½ (Near white metal) with surface profile 35-50µm	Primer: Two coats of Red Oxide Zinc phosphate primer, DFT-30µ/coat; Total-60µ (Primer is only envisaged as lining is given in inside surfaces of the tank)				
11	Emergency quench system, Handling Equipment RC pump **(Clause 20.03.00 of Part- C Section VI)**	FW 227 FW 249	Power Tool Cleaning to St3 (SSPC-SP3)	Red Oxide Zinc Phosphate Primer to IS: 12744 (Two coats)	60	Synthetic Enamel to IS 2932 Shade: Grey white RAL 9002 (Two coats)	60	120
12	Air oxidation system, Viewing ports (Without glass) **(Clause 20.03.00 of Part- C Section VI)**	FW 230 FW 239	Power Tool Cleaning to St3 (SSPC-SP3)	Red Oxide Zinc Phosphate Primer to IS: 12744 (Two coats)	60	Synthetic Enamel to IS 2932 Shade: Grey white RAL 9002 (Two coats)	40	100
13	Absorber W/D interface, W/D wash system, Slurry distribution system, Oxidation Air distribution system **(Clause 1.04.00 of Part- A Section VI)**	FW 228 FW 229 FW 243 FW 244	Blast cleaning to Sa 2½	**Primer:** Two coats of Epoxy resin based Epoxy Zinc phosphate primer to IS 13238 DFT- 50µ/coat **Intermediate:** One coat of Two component epoxy based intermediate paint pigmented with MIO/Tio2 DFT- 100µ	100 100	**Finish:** One coat of Epoxy based finish paint to IS 14209; DFT- 75µ **Finish:** One coat of acrylic aliphatic polyurethane paint to IS 13213 DFT-25µ Shade: Grey White, RAL9002	75 25	300

Sl No	SURFACE LOCATION		PGMA	SURFACE PREPARATION	PRIMER		FINISH		TOTAL DFT IN (µm min.)
					PAINT	DFT (µm min.)	PAINT	DFT (µm min.)	
14	Expansion joint between bypass **(Clause 20.03.00 of Part- C Section VI)**	Flue gas swept surface	FW 251	Power Tool Cleaning to St3 (SSPC-SP3)	Red Oxide Zinc Phosphate Primer to IS: 12744 (two coats)	60	--	--	60
		Insulated surfaces		Power Tool Cleaning to St3 (SSPC-SP3)	HR Aluminium paint to IS 13183 Gr.II (upto 400 deg C)	40	NIL	--	40
15	Expansion joint **(Clause 20.03.00 of Part- C Section VI)**	Flue gas swept surface	FW 252	Power Tool Cleaning to St3 (SSPC-SP3)	Red Oxide Zinc Phosphate Primer to IS: 12744 (Two coats)	60	NIL	--	60
		Insulated surfaces		Power Tool Cleaning to St3 (SSPC-SP3)	HR Aluminium paint to IS 13183 Gr.II (upto 400 deg C)	40	NIL	--	40
16	Ducts between bypass duct inlet& booster fan **(Clause 20.03.00 of Part- C Section VI)**	Flue gas swept surface	FW 255	Power Tool Cleaning to St3 (SSPC-SP3)	Red Oxide Zinc Phosphate Primer to IS: 12744 (Two coats)	60	NIL	--	60
		Insulated surfaces		Power Tool Cleaning to St3 (SSPC-SP3)	HR Aluminium paint to IS 13183 Gr.II (upto 400 deg C)	40	NIL	--	40
17	Ducts between Booster fan& Absorber **(Clause 20.03.00 of Part- C Section VI)**	Flue gas swept surface	FW 256	Power Tool Cleaning to St3 (SSPC-SP3)	Red Oxide Zinc Phosphate Primer to IS: 12744 (Two coats)	60	NIL	--	60
		Insulated surfaces		Power Tool Cleaning to St3 (SSPC-SP3)	HR Aluminium paint to IS 13183 Gr.II (upto 400 deg C)	40	NIL	--	40

Sl No	SURFACE LOCATION		PGMA	SURFACE PREPARATION	PRIMER		FINISH		TOTAL DFT IN (µm min.)
					PAINT	DFT (µm min.)	PAINT	DFT (µm min.)	
18	Ducts between Absorber& Stack **(Clause 20.03.00 of Part- C Section VI)**	Flue gas swept surface	FW 257	Power Tool Cleaning to St3 (SSPC-SP3)	Red Oxide Zinc Phosphate Primer to IS: 12744 (Two coats)	60	NIL	--	60
		Insulated surfaces		Power Tool Cleaning to St3 (SSPC-SP3)	HR Aluminium paint to IS 13183 Gr.II (upto 400 deg C)	40	NIL	--	40
19	Duct structure between bypass duct& Booster fan **(Clause 31.03.00 of Sec.VI, Part-B, Subsection- IV-D)**		FW 260	Blast cleaning to Sa 2½ (Near white metal) with surface profile 40-60µm conforming to ISO 8501-1	Primer: One coat of Two component moisture curing zinc (ethyl) silicate primer coat (Min 80% metallic zinc content in dry film, solid by volume minimum 60% ±2). Zinc dust composition and properties shall be as per Type II as per ASTM D520-00 DFT- 70µ Intermediate: One coat of Two component polyamide cured epoxy with MIO content (containing lamellar MIO Min 30% on pigment, solid by volume min. 80%±2) DFT- 100µ	70 100	Finish: Two coats of two pack aliphatic isocyanate cured acrylic polyurethane paint to IS 13213 solid by volume min.55%±2) DFT- 35µ/ coat Shade: Grey white, RAL 9002 With gloss retention (SSPC paint spec no.36, ASTM D4587, D2244, D523 of level 2 after min. 1000 hrs exposure, gloss less than 30 and colour change less than 2.0Δ E)	70	240
20	Duct structure between Booster fan& Absorber **(Clause 31.03.00 of Sec.VI, Part-B, Subsection- IV-D)**		FW 261	Blast cleaning to Sa 2½ (Near white metal) with surface profile 40-60µm conforming to ISO 8501-1	Primer: One coat of Two component moisture curing zinc (ethyl) silicate primer coat (Min 80% metallic zinc content in dry film, solid by volume minimum 60% ±2). Zinc dust composition and properties shall be as per Type II as per ASTM D520-00 DFT- 70µ Intermediate: One coat of Two component polyamide cured epoxy	70 100	Finish: Two coats of two pack aliphatic isocyanate cured acrylic polyurethane paint to IS 13213 solid by volume min.55%±2) DFT- 35µ/ coat Shade: Grey white, RAL 9002 With gloss retention (SSPC paint spec no.36, ASTM D4587, D2244, D523 of level 2 after min. 1000 hrs	70	240

Sl No	SURFACE LOCATION	PGMA	SURFACE PREPARATION	PRIMER		FINISH		TOTAL DFT IN (µm min.)
				PAINT	DFT (µm min.)	PAINT	DFT (µm min.)	
				with MIO content (containing lamellar MIO Min 30% on pigment, solid by volume min. 80%±2) DFT- 100µ		exposure, gloss less than 30 and colour change less than 2.0Δ E)		
21	Duct structure between Absorber & Stack **(Clause 31.03.00 of Sec.VI, Part-B, Subsection- IV-D)**	FW 262	Blast cleaning to Sa 2½ (Near white metal) with surface profile 40-60µm conforming to ISO 8501-1	Primer: One coat of Two component moisture curing zinc (ethyl) silicate primer coat (Min 80% metallic zinc content in dry film, solid by volume minimum 60% ±2). Zinc dust composition and properties shall be as per Type II as per ASTM D520-00 DFT- 70µ Intermediate: One coat of Two component polyamide cured epoxy with MIO content (containing lamellar MIO Min 30% on pigment, solid by volume min. 80%±2) DFT- 100µ	70 100	Finish: Two coats of two pack aliphatic isocyanate cured acrylic polyurethane paint to IS 13213 solid by volume min.55%±2) DFT- 35µ/ coat Shade: Grey white, RAL 9002 With gloss retention (SSPC paint spec no.36, ASTM D4587, D2244, D523 of level 2 after min. 1000 hrs exposure, gloss less than 30 and colour change less than 2.0Δ E)	70	240

Sl No	SURFACE LOCATION	PGMA	SURFACE PREPARATION	PRIMER		FINISH		TOTAL DFT IN (µm min.)
				PAINT	DFT (µm min.)	PAINT	DFT (µm min.)	
22	Foundation material for duct structures, Absorber, Elevator, RC pump shed, tanks, Silo Structure, pipe racks	FW 280 FW 281 FW 282 FW 283 FW 740 FW 760 FW 762 FW 763	Temporary rust preventive fluid application as per PRQA 523 DFT- 20µ All Threaded and other surfaces of foundation bolt and its materials shall be coated with temporary rust preventive fluid. During execution of civil works the dried film of coating will be removed using Organic Solvents.					
23	Structures for Emergency Quench water tank Structures for Elevator **(Clause 31.03.00 of Sec.VI, Part-B, Subsection- IV-D)**	FW 285 FW 292	Blast cleaning to Sa 2½ (Near white metal) with surface profile 40-60µm conforming to ISO 8501-1	Primer: One coat of Two component moisture curing zinc (ethyl) silicate primer coat (Min 80% metallic zinc content in dry film, solid by volume minimum 60% ±2). Zinc dust composition and properties shall be as per Type II as per ASTM D520-00 DFT- 70µ Intermediate: One coat of Two component polyamide cured epoxy with MIO content (containing lamellar MIO Min 30% on pigment, solid by volume min. 80%±2) DFT- 100µ	70 100	Finish: Two coats of two pack aliphatic isocyanate cured acrylic polyurethane paint to IS 13213 solid by volume min.55%±2) DFT- 35µ/ coat Shade: Grey white, RAL 9002 With gloss retention (SSPC paint spec no.36, ASTM D4587, D2244, D523 of level 2 after min. 1000 hrs exposure, gloss less than 30 and colour change less than 2.0Δ E)	70	240
24	Elevator and accessories **(Clause 20.03.00 of Part- C Section VI)**	FW 293 FW 716	Power Tool Cleaning to st3 (SSPC-SP3	Red Oxide Zinc Phosphate Primer to IS: 12744 (Two coats)	60	Synthetic Enamel to IS 2932 Shade: Grey white RAL 9002 (Two coats)	60	120

Sl No	SURFACE LOCATION	PGMA	SURFACE PREPARATION	PRIMER		FINISH		TOTAL DFT IN (µm min.)
				PAINT	DFT (µm min.)	PAINT	DFT (µm min.)	
25	Structures for booster fan handling **(Clause 31.03.00 of Sec.VI, Part-B, Subsection- IV-D)**	FW 310	Blast cleaning to Sa 2½ (Near white metal) with surface profile 40-60µm conforming to ISO 8501-1	Primer: One coat of Two component moisture curing zinc (ethyl) silicate primer coat (Min 80% metallic zinc content in dry film, solid by volume minimum 60% ±2). Zinc dust composition and properties shall be as per Type II as per ASTM D520-00 DFT- 70µ Intermediate: One coat of Two component polyamide cured epoxy with MIO content (containing lamellar MIO Min 30% on pigment, solid by volume min. 80%±2) DFT- 100µ	70 100	Finish: Two coats of two pack aliphatic isocyanate cured acrylic polyurethane paint to IS 13213 solid by volume min.55%±2) DFT- 35µ/ coat Shade: Grey white, RAL 9002 With gloss retention (SSPC paint spec no.36, ASTM D4587, D2244, D523 of level 2 after min. 1000 hrs exposure, gloss less than 30 and colour change less than 2.0Δ E)	70	240
26	Galleries and railings for Stairs, Absorber, Dampers, Ducts, Tanks **(Clause 31.06.00 of Sec.VI, Part-B, Subsection- IV-D)**	FW 237 FW 610 FW 612 FW 613 FW 722	Blast cleaning to Sa 2½/ Acid pickling	Hand rails, Gratings- Hot dip galvanizing to 610gms/sq.m (minimum) and to a coating thickness of 87µm (minimum)				
27	Galleries and railings for Stairs, Absorber, Dampers, Ducts, Tanks – Structures other than the above **(Clause 31.03.00 of Sec.VI, Part-B, Subsection- IV-D)**	FW 237 FW 610 FW 612 FW 613 FW 722	Blast cleaning to Sa 2½ (Near white metal) with surface profile 40-60µm conforming to ISO 8501-1	Primer: One coat of Two component moisture curing zinc (ethyl) silicate primer coat (Min 80% metallic zinc content in dry film, solid by volume minimum 60% ±2). Zinc dust composition and properties shall be as per Type II as per ASTM D520-00 DFT- 70µ	70	Finish: Two coats of two pack aliphatic isocyanate cured acrylic polyurethane paint to IS 13213 solid by volume min.55%±2) DFT- 35µ/ coat Shade: Grey white, RAL 9002	70	240

Sl No	SURFACE LOCATION	PGMA	SURFACE PREPARATION	PRIMER		FINISH		TOTAL DFT IN (µm min.)
				PAINT	DFT (µm min.)	PAINT	DFT (µm min.)	
				Intermediate: One coat of Two component polyamide cured epoxy with MIO content (containing lamellar MIO Min 30% on pigment, solid by volume min. 80%±2) DFT- 100µ	100	With gloss retention (SSPC paint spec no.36, ASTM D4587, D2244, D523 of level 2 after min. 1000 hrs exposure, gloss less than 30 and colour change less than 2.0Δ E)		
28	Slurry pumps & accessories, Water pumps **(Referred from cl. 7.05.00 of Section-VI, Part-B, Sub section-I-M5)**	FW 701 FW 702	Power Tool Cleaning to St3 (SSPC-SP3)	Primer: Red Oxide Zinc Phosphate Primer to IS: 12744 (Two coats) Intermediate: One coat of Synthetic Enamel intermediate coat to IS 2932; DFT- 50µ	60 50	Two coats of Synthetic Enamel to IS 2932, DFT- 50µ/ coat Shade: Light blue RAL 5012	100	210
29	Monorail for hoist & cranes **(Clause 31.03.00 of Sec.VI, Part-B, Subsection- IV-D)**	FW 710	Blast cleaning to Sa 2½ (Near white metal) with surface profile 40-60µm conforming to ISO 8501-1	Primer: One coat of Two component moisture curing zinc (ethyl) silicate primer coat (Min 80% metallic zinc content in dry film, solid by volume minimum 60% ±2). Zinc dust composition and properties shall be as per Type II as per ASTM D520-00 DFT- 70µ Intermediate: One coat of Two component polyamide cured epoxy with MIO content (containing lamellar MIO Min 30% on pigment, solid by volume min. 80%±2) DFT- 100µ	70 100	Finish: Two coats of two pack aliphatic isocyanate cured acrylic polyurethane paint to IS 13213 solid by volume min.55%±2) DFT- 35µ/ coat Shade: Grey white, RAL 9002 With gloss retention (SSPC paint spec no.36, ASTM D4587, D2244, D523 of level 2 after min. 1000 hrs exposure, gloss less than 30 and colour change less than 2.0Δ E)	70	240
30	Handling Equipment- Hoists& Man hole door **(Clause 20.03.00 of Part-C Section VI)**	FW 713 FW 714 FW 717	Power Tool Cleaning to st3 (SSPC-SP3	Red Oxide Zinc Phosphate Primer to IS: 12744 (Two coats) Idler roller shall be applied with two coats of 70 microns at shop	70	Synthetic Enamel to IS 2932 Shade: Grey white RAL 9002 (Two coats)	60	130
31	Agitator support **Clause 31.03.00 of Sec.VI, Part-B, Subsection- IV-D)**	FW 721	Blast cleaning to Sa 2½ (Near white metal) with surface	Primer: One coat of Two component moisture curing zinc (ethyl) silicate primer coat (Min 80% metallic zinc content in dry film, solid by volume	70	Finish: Two coats of two pack aliphatic isocyanate cured acrylic polyurethane	70	240

Sl No	SURFACE LOCATION	PGMA	SURFACE PREPARATION	PRIMER		FINISH		TOTAL DFT IN (µm min.)
				PAINT	DFT (µm min.)	PAINT	DFT (µm min.)	
			profile 40-60µm conforming to ISO 8501-1	minimum 60% ±2). Zinc dust composition and properties shall be as per Type II as per ASTM D520-00 DFT- 70µ Intermediate: One coat of Two component polyamide cured epoxy with MIO content (containing lamellar MIO Min 30% on pigment, solid by volume min. 80%±2) DFT- 100µ	100	paint to IS 13213 solid by volume min.55%±2) DFT- 35µ/ coat Shade: Grey white, RAL 9002 With gloss retention (SSPC paint spec no.36, ASTM D4587, D2244, D523 of level 2 after min. 1000 hrs exposure, gloss less than 30 and colour change less than 2.0Δ E)		
32	Limestone silo structures **Clause 31.03.00 of Sec.VI, Part-B, Subsection- IV-D)**	FW 730	Blast cleaning to Sa 2½ (Near white metal) with surface profile 40-60µm conforming to ISO 8501-1	Primer: One coat of Two component moisture curing zinc (ethyl) silicate primer coat (Min 80% metallic zinc content in dry film, solid by volume minimum 60% ±2). Zinc dust composition and properties shall be as per Type II as per ASTM D520-00 DFT- 70µ Intermediate: One coat of Two component polyamide cured epoxy with MIO content (containing lamellar MIO Min 30% on pigment, solid by volume min. 80%±2) DFT- 100µ	70 100	Finish: Two coats of two pack aliphatic isocyanate cured acrylic polyurethane paint to IS 13213 solid by volume min.55%±2) DFT- 35µ/ coat Shade: Grey white, RAL 9002 With gloss retention (SSPC paint spec no.36, ASTM D4587, D2244, D523 of level 2 after min. 1000 hrs exposure, gloss less than 30 and colour change less than 2.0Δ E)	70	240
33	Limestone Silo- Outside surfaces **Clause 31.03.00 of Sec.VI, Part-B, Subsection- IV-D)**	FW 731	Blast cleaning to Sa 2½ (Near white metal) with surface profile 40-60µm conforming to ISO 8501-1	Primer: One coat of Two component moisture curing zinc (ethyl) silicate primer coat (Min 80% metallic zinc content in dry film, solid by volume minimum 60% ±2). Zinc dust composition and properties shall be as per Type II as per ASTM D520-00 DFT- 70µ	70	Finish: Two coats of two pack aliphatic isocyanate cured acrylic polyurethane paint to IS 13213 solid by volume min.55%±2) DFT- 35µ/ coat Shade: Grey white, RAL 9002	70	240

Sl No	SURFACE LOCATION	PGMA	SURFACE PREPARATION	PRIMER		FINISH		TOTAL DFT IN (µm min.)
				PAINT	DFT (µm min.)	PAINT	DFT (µm min.)	
				Intermediate: One coat of Two component polyamide cured epoxy with MIO content (containing lamellar MIO Min 30% on pigment, solid by volume min. 80%±2) DFT- 100µ	100	With gloss retention (SSPC paint spec no.36, ASTM D4587, D2244, D523 of level 2 after min. 1000 hrs exposure, gloss less than 30 and colour change less than 2.0Δ E)		
34	Lime stone Silo- Inside surfaces (Conical portion)	FW 731	Blast cleaning to Sa 2½ (Near white metal) with surface profile 35-50µm conforming to ISO 8501-1	Primer: Two coats of Red Oxide Zinc phosphate primer to IS: 12744 (SS lining is inside the Limestone silo conical portion, hence primer is only envisaged; SS lining will be done at shops itself)	60	NIL	--	60
35	Lime stone Silo- Inside surfaces (Cylindrical portion)	FW 731	Blast cleaning to Sa 2½ (Near white metal) with surface profile 40-60µm conforming to ISO 8501-1	**Primer Coat:** One coat of two component moisture curing Inorganic Ethyl Zinc Silicate Primer to IS 14946, (Solid by volume- 60% (min)), (Metallic zinc content 80% (min)) DFT = 70 µm per coat (min.) Zinc dust composition shall be Type-II as per ASTM D520-00	70	--	--	70
36	Air cannon silo, Bag filter & Fan assy, Nozzles& Flanges **(Clause 20.03.00 of Part-C Section VI)**	FW 723 FW 724 FW 725	Power Tool Cleaning to St3 (SSPC-SP3)	Red Oxide Zinc Phosphate Primer to IS: 12744 (Two coats)	60	Synthetic Enamel to IS 2932 Shade: Grey white RAL 9002 (Two coats)	40	100
37	Limestone silo approach platform, Platform for Pipe racks& Sub pipe racks **(Clause 31.06.00 of Sec.VI, Part-B, Subsection- IV-D)**	FW 733 FW 766 FW 767	Blast cleaning to Sa 2½/ Acid pickling	Hand rails, Ladders, Gratings- Hot dip galvanizing to 610gms/sq. m (minimum) and to a coating thickness of 87µm (minimum)				

Sl No	SURFACE LOCATION	PGMA	SURFACE PREPARATION	PRIMER		FINISH		TOTAL DFT IN (µm min.)
				PAINT	DFT (µm min.)	PAINT	DFT (µm min.)	
38	Limestone silo approach platform, Pipe racks, Sub pipe racks platform- Structures other than the above **(Clause 31.03.00 of Sec.VI, Part-B, Subsection- IV-D)**	FW 733 FW 766 FW 767	Blast cleaning to Sa 2½ (Near white metal) with surface profile 40-60µm conforming to ISO 8501-1	Primer: One coat of Two component moisture curing zinc (ethyl) silicate primer coat (Min 80% metallic zinc content in dry film, solid by volume minimum 60% ±2). Zinc dust composition and properties shall be as per Type II as per ASTM D520-00 DFT- 70µ Intermediate: One coat of Two component polyamide cured epoxy with MIO content (containing lamellar MIO Min 30% on pigment, solid by volume min. 80%±2) DFT- 100µ	70 100	Finish: Two coats of two pack aliphatic isocyanate cured acrylic polyurethane paint to IS 13213 solid by volume min.55%±2) DFT- 35µ/ coat Shade: Grey white, RAL 9002 With gloss retention (SSPC paint spec no.36, ASTM D4587, D2244, D523 of level 2 after min. 1000 hrs exposure, gloss less than 30 and colour change less than 2.0Δ E)	70	240
39	Limestone Mill – Outside surfaces **(Clause 1.04.00 of Part- A Section VI)**	FW 735	Blast cleaning to Sa 2½	**Primer:** Two coats of Epoxy resin based Epoxy Zinc phosphate primer to IS 13238 DFT- 50µ/coat **Intermediate:** One coat of Two component epoxy based intermediate paint pigmented with MIO/Tio2 DFT- 100µ	100 100	**Finish:** One coat of Epoxy based finish paint to IS 14209; DFT- 75µ **Finish:** One coat of acrylic aliphatic polyurethane paint to IS 13213 DFT-25µ Shade: Grey White, RAL9002	75 25	300
40	Lime stone mill- Inside surfaces	FW 735	Blast cleaning to Sa 2½ (Near white metal) with surface profile 40-60µm conforming to ISO 8501-1	**Primer Coat:** One coat of two component moisture curing Inorganic Ethyl Zinc Silicate Primer to IS 14946, (Solid by volume- 60% (min)), (Metallic zinc content 80% (min)) DFT = 70 µm per coat (min.) Zinc dust composition shall be Type-II as per ASTM D520-00	70	--	--	70

Sl No	SURFACE LOCATION	PGMA	SURFACE PREPARATION	PRIMER		FINISH		TOTAL DFT IN (µm min.)
				PAINT	DFT (µm min.)	PAINT	DFT (µm min.)	
41	Gypsum belt filter and accessories Structural items **(Clause 1.04.00 of Part- A Section VI)**	FW 738	Blast cleaning to Sa 2½	**Primer:** Two coats of Epoxy resin based Epoxy Zinc phosphate primer to IS 13238 DFT- 50µ/coat **Intermediate:** One coat of Two component epoxy based intermediate paint pigmented with MIO/Tio2 DFT- 100µ	100 100	**Finish:** One coat of Epoxy based finish paint to IS 14209; DFT- 75µ **Finish:** One coat of acrylic aliphatic polyurethane paint to IS 13213 DFT-25µ Shade: Grey White, RAL9002	75 25	300
42	Lime stone slurry storage tank, Auxiliary absorber tank, Filtrate tank, Wastage water tank, Hydro cyclone waste water tank, Neutralization tank, Process Water tank, Belt filter washing tank, Primary hydro cyclone feed tank, Clarified water tank Outside surfaces **(Clause 31.03.00 of Sec.VI, Part-B, Subsection- IV-D)**	FW 742 FW 743 FW 744 FW 745 FW 747 FW 748 FW 785 FW 786 FW 800 FW 802	Blast cleaning to Sa 2½ (Near white metal) with surface profile 40-60µm conforming to ISO 8501-1	Primer: One coat of Two component moisture curing zinc (ethyl) silicate primer coat (Min 80% metallic zinc content in dry film, solid by volume minimum 60% ±2). Zinc dust composition and properties shall be as per Type II as per ASTM D520-00 DFT- 70µ Intermediate: One coat of Two component polyamide cured epoxy with MIO content (containing lamellar MIO Min 30% on pigment, solid by volume min. 80%±2) DFT- 100µ	70 100	Finish: Two coats of two pack aliphatic isocyanate cured acrylic polyurethane paint to IS 13213 solid by volume min.55%±2) DFT- 35µ/ coat Shade: Grey white, RAL 9002 With gloss retention (SSPC paint spec no.36, ASTM D4587, D2244, D523 of level 2 after min. 1000 hrs exposure, gloss less than 30 and colour change less than 2.0Δ E)	70	240
43	Lime stone slurry storage tank, Auxiliary absorber tank, Filtrate tank, Wastage water tank, Hydrocyclone waste water tank, Neutralization tank,	FW 742 FW 743 FW 744 FW 745 FW 747 FW 748 FW 749	Blast cleaning to Sa 2½ (Near white metal) with surface profile 35-50µm	Red Oxide Zinc Phosphate Primer to IS: 12744 (Two coats) (Liner is inside the tank, hence primer is only envisaged; Protection till erection only)	60	NIL	--	60

Sl No	SURFACE LOCATION	PGMA	SURFACE PREPARATION	PRIMER		FINISH		TOTAL DFT IN (µm min.)
				PAINT	DFT (µm min.)	PAINT	DFT (µm min.)	
	Process Water tank, Belt filter washing tank, Primary Hydrocyclone feed tank, Clarified water tank, Tank internal structure Inside surfaces	FW 800 FW 802						
44	Process water pipe accessories, Cooling pipe accessories **(Referred from cl. 7.05.00 of Section-VI, Part-B, Sub section-I-M5)**	FW 751 FW 752	Power Tool Cleaning to St3 (SSPC-SP3)	Primer: Red Oxide Zinc Phosphate Primer to IS: 12744 (Two coats) Intermediate: One coat of Synthetic Enamel intermediate coat to IS 2932; DFT- 50µ	60 50	Two coats of Synthetic Enamel to IS 2932, DFT- 50µ/ coat Shade: Grey white RAL 9002 Identification Tag: Sea Green Shade no: 217 as per IS 5	100	210
45	Slurry pipe accessories **(Referred from cl. 7.05.00 of Section-VI, Part-B, Sub section-I-M5)**	FW 753	Power Tool Cleaning to St3 (SSPC-SP3)	Primer: Red Oxide Zinc Phosphate Primer to IS: 12744 (Two coats) Intermediate: One coat of Synthetic Enamel intermediate coat to IS 2932; DFT- 50µ	60 50	Two coats of Synthetic Enamel to IS 2932, DFT- 50µ/ coat Shade: Grey white RAL 9002 Identification Tag: Sea Green Shade no: 217 as per IS 5	100	210
46	Service Air pipe accessories **(Referred from cl. 10.00 .00 of Section-VI, Part-B, Sub section-I-M3)**	FW 754	Power Tool Cleaning to St3 (SSPC-SP3)	Red Oxide Zinc Phosphate Primer to IS: 12744 (Two coat)	60	Synthetic Enamel to IS 2932 Shade: Grey white RAL 9002 (Two coats)- 30µ/ coat Identification Tag: Sky Blue Shade no: 101 as per IS 5	60	120
47	Instrument air pipe accessories **(Referred from cl. 10.00 .00 of Section-VI, Part-B, Sub section-I-M3)**	FW 755	Power Tool Cleaning to St3 (SSPC-SP3)	Red Oxide Zinc Phosphate Primer to IS: 12744 (Two coat)	60	Synthetic Enamel to IS 2932 Shade: Grey white RAL 9002 (Two coats)- 30µ/ coat	60	120

Sl No	SURFACE LOCATION	PGMA	SURFACE PREPARATION	PRIMER		FINISH		TOTAL DFT IN (µm min.)
				PAINT	DFT (µm min.)	PAINT	DFT (µm min.)	
						Identification Tag: Sky Blue Shade no: 101 as per IS 5		
48	All valves (Temp <95 deg C) **(Clause 20.03.00 of Part-C Section VI)**	FW 815 to FW 851	Power Tool Cleaning to St3 (SSPC-SP3)	Red Oxide Zinc Phosphate Primer to IS: 12744 (Two coats)	60	Synthetic Enamel to IS 2932 Shade: Grey white RAL 9002 (Two coats)- 30µ/ coat	60	120
49	Structure for Pipe racks, Sub pipe racks Trestle for pipe racks, Structures inside Gypsum dewatering building & Ball mill building **(Clause 31.03.00 of Sec.VI, Part-B, Subsection- IV-D)**	FW 761 FW 765 FW 768 FW 769 FW 787	Blast cleaning to Sa 2½ (Near white metal) with surface profile 40-60µm conforming to ISO 8501-1	Primer: One coat of Two component moisture curing zinc (ethyl) silicate primer coat (Min 80% metallic zinc content in dry film, solid by volume minimum 60% ±2). Zinc dust composition and properties shall be as per Type II as per ASTM D520-00 DFT- 70µ Intermediate: One coat of Two component polyamide cured epoxy with MIO content (containing lamellar MIO Min 30% on pigment, solid by volume min. 80%±2) DFT- 100µ	70 100	Finish: Two coats of two pack aliphatic isocyanate cured acrylic polyurethane paint to IS 13213 solid by volume min.55%±2) DFT- 35µ/ coat Shade: Grey white, RAL 9002 With gloss retention (SSPC paint spec no.36, ASTM D4587, D2244, D523 of level 2 after min. 1000 hrs exposure, gloss less than 30 and colour change less than 2.0Δ E)	70	240
50	Supports for cable trays, Air receivers, commissioning& Mandatory spares, Tools & tackles **(Clause 20.03.00 of Part-C Section VI)**	FW 779 FW 798 FW 988 FW 996	Power Tool Cleaning to St3 (SSPC-SP3)	Red Oxide Zinc Phosphate Primer to IS: 12744 (Two coats)	60	Synthetic Enamel to IS 2932 Shade: Grey white RAL 9002 (Two coats)	40	100

Sl No	SURFACE LOCATION	PGMA	SURFACE PREPARATION	PRIMER		FINISH		TOTAL DFT IN (µm min.)
				PAINT	DFT (µm min.)	PAINT	DFT (µm min.)	

3. GATES & DAMPERS

01	**Gates & Dampers** > 95^0 C Insulated Surfaces& Uninsulated surfaces	57 540 57 550 57 583	Power Tool Cleaning to St3 (SSPC-SP3)	HR Aluminium paint to IS 13183 Gr.II (upto 400 deg C)	40	--	--	40
02	Seal air piping	57 141	Power Tool Cleaning to St3 (SSPC-SP3)	Red Oxide Zinc Phosphate Primer to IS: 12744 (Two coat)	60	Synthetic Enamel to IS 2932 Shade: Grey white RAL 9002 (Two coats)-30µ/ coat Identification Tag: Sky Blue Shade no: 101 as per IS 5	60	120
03	Blower with Motor Knife Gate valve Mounting bracket Mandatory spares	57 491 57 497 57 209	Power Tool Cleaning to St3 (SSPC-SP3)	Red Oxide Zinc Phosphate Primer to IS: 12744 (Two coats)	60	Synthetic Enamel to IS 2932 Shade: Grey white RAL 9002 (Two coats)	40	100
04	Ladder, Cage for Ladder Toe Guard Plate Floor Grill, Hand Rails, Hand Rail Post **Clause 31.06.00 of Sec.VI, Part-B, Subsection- IV-D**	57 466 57 566	Blast cleaning to Sa 2½/ Acid Pickling	Hot Dip Galvanizing to 610 gm per sq. Meter (minimum) and to a coating thickness of 87 µm (minimum)				
05	Other Structural Items-Other than sl.no. 3 of above **(Clause 31.03.00 of Sec.VI, Part-B, Subsection- IV-D)**	57 466 57 566	Blast cleaning to Sa 2½ (Near white metal) with surface profile 40-60µm conforming to ISO 8501-1	Primer: One coat of Two component moisture curing zinc (ethyl) silicate primer coat (Min 80% metallic zinc content in dry film, solid by volume minimum 60% ±2). Zinc dust composition	70	Finish: Two coats of two pack aliphatic isocyanate cured acrylic polyurethane paint to IS 13213 solid by volume min.55%±2) DFT- 35µ/ coat	70	240

Sl No	SURFACE LOCATION	PGMA	SURFACE PREPARATION	PRIMER		FINISH		TOTAL DFT IN (µm min.)
				PAINT	DFT (µm min.)	PAINT	DFT (µm min.)	
				and properties shall be as per Type II as per ASTM D520-00 DFT- 70µ Intermediate: One coat of Two component polyamide cured epoxy with MIO content (containing lamellar MIO Min 30% on pigment, solid by volume min. 80%±2) DFT- 100µ	100	Shade: Grey white, RAL 9002 With gloss retention (SSPC paint spec no.36, ASTM D4587, D2244, D523 of level 2 after min. 1000 hrs exposure, gloss less than 30 and colour change less than 2.0Δ E)		

Sl No	SURFACE LOCATION	PGMA	SURFACE PREPARATION	PRIMER		FINISH		TOTAL DFT IN (µm min.)
				PAINT	DFT (µm min.)	PAINT	DFT (µm min.)	

4. PAINTING OF DAMAGED AREAS

Areas where paint has deteriorated badly by erosion and areas where the paint film has lost its adhesion property and where the steel has got rusted appreciably - these areas are to be repainted as per the following procedure:

SL NO	SURFACE LOCATION	SURFACE PREPARATION	PRIMER, INTERMEDIATE & FINISH
1	Paint damaged Components falling under Sl.no. 04,05,06,09,10,11 of Fans, Sl no.02,03,04, 05,06,07, 09, 13,19,20,21,23,25,27, 29, 31,32 33,38,39,41,42, 49 of FGD and Sl no. 5 of GAD.	Hand/ Power Tool cleaning to Bare metal to minimum 6 inches peripheral area adjoining to damaged area	Primer: Epoxy Zinc rich primer to IS 14589, DFT-70µ (If Metal surface exposed) followed by intermediate & finish coat as per respective scheme If primer is intact- Intermediate & finish as per respective scheme
2	Paint damaged components failing under other Sl.nos of Fans, FGD& GAD	Power Tool Cleaning to Bare metal	Primer and Finish : As given in respective scheme

Sl No	SURFACE LOCATION	PGMA	SURFACE PREPARATION	PRIMER		FINISH		TOTAL DFT IN (µm min.)
				PAINT	DFT (µm min.)	PAINT	DFT (µm min.)	

GENERAL NOTES

1. No painting is required for Galvanized, non-ferrous & stainless steel items, except as indicated above.
2. Machined items are to be applied with coat of temporary rust preventive oil
3. PGMAs covered in sub-supplier (ie., Purchased) items viz., Agitator/ slide bearing and other sub-delivery components etc., are not indicated in the above list. However, the Painting Schedule for all items supplied by all sub-suppliers and BOI under the scope of BHEL shall be same as for main equipment covered in this document.
4. In sub-assy, wherever plates / sheets of thickness less than or equal to 5mm and rods are used, very minor items like clamps, small items etc - Power Tool or Hand Tool Cleaning to SSPC - SP 3 / SP 2 shall be followed and painting under Sl no:01 of Fans shall be followed.
5. Ground shade/colour of finish paints and identification tag/band for equipments, fans, piping, pipe services, supporting structures and other components is followed as per NTPC doc no: QS-01-DIV-W-4 at site.
6. All components covered under different PGMAs are to be painted. Incase any component is left out, the same shall deemed to be included under the relevant section.
7. All threaded and other surfaces of foundation bolts and its materials, insulation pins, Anchor channels, Sleeves shall be coated with temporary rust preventive fluid and during execution of civil works; the dried film of coating shall be removed using organic solvents.
8. Painting requirement for all electrical equipment shall be as per the details identified in specification for the respective equipment.
9. All steel structures shall be provided with painting as given in the specification. Further, painting system shall also meet the requirements of corrosivity category C3 (durability high) as per ISO 12944.
10. Finish coat to be applied after an interval of min 10 hrs and within 6 months (after completion of intermediate coat).
11. Primer coat on steel shall be applied in shop immediately after blast cleaning by airless spray technique.
12. For the portion of steel surfaces embedded in concrete, the surface shall be prepared by Manual cleaning and provided with Primer coat of Chlorinated Rubber based Zinc Phosphate Primer of Minimum 50 Micron DFT.

Sl No	SURFACE LOCATION	PGMA	SURFACE PREPARATION	PRIMER		FINISH		TOTAL DFT IN (µm min.)
				PAINT	DFT (µm min.)	PAINT	DFT (µm min.)	

PAINTING SCHEME- DETAILS OF PROCUREMENT & APPLICATION PROCESSES

SL NO	TYPE OF PAINT	SPECIFICATION OF PAINT	NO OF PACK	VOLUME OF SOLIDS (% Min)	MODE OF APPLICATION	MIN. OVER COATING INTERVAL (hours)	SHADE
01	Epoxy Zinc phosphate primer	IS 13238	2	40	Spray	24	Grey
02	Zinc Ethyl silicate primer (% Zn on dry film= 80 (min))	IS 14946	2	60	Airless Spray only At Shop	24	Grey
03	Epoxy High solid-Polyamide cured Epoxy based MIO pigmented **intermediate coat**	--	2	80	Airless Spray only At Shop	16	Brown
04	Aliphatic isocyanate acrylic polyurethane paint	IS 13213	2	55	Spray At Shop	16	Corresponding shade no
05	Heat resistant aluminium paint	IS 13183 Grade II	1	--	Brush/ Spray	24	--
06	Long oil alkyd Synthetic enamel finish paint	IS 2932	1	35	Brush/ Spray	12	Corresponding shade no
07	Synthetic Enamel Intermediate coat	IS 2932	1	40	Brush/ Spray	12	--
08	Red oxide Zinc phosphate primer	IS 12744	1	--	Brush/ spray	12	--

Sl No	SURFACE LOCATION	PGMA	SURFACE PREPARATION	PRIMER		FINISH		TOTAL DFT IN (µm min.)
				PAINT	DFT (µm min.)	PAINT	DFT (µm min.)	

PGMA DETAILS

SNO	PGMA	PGMA DESCRIPTION	PGMA DETAILS
01	FW 212	Slurry recirculation pump system	RC Pumps incl Shaft seal Common Base Plate Coupling and Guard Gear Box Expansion Bellow Anchor Bolts & Fasteners Special Tools
02	FW 219	Absorber system base	Absorber tank bottom plate
03	FW 220	Absorber system structures	Absorber tank structure Absorber tower structure Spray headers structure
04	FW 221	Absorber system casing bottom	Absorber tank wall casing- bottom
05	FW 222	Absorber system casing top	Absorber Tank wall casing –Top Mist Eliminator supports Spray pipe supports Internal Beam Shim plates in Absorber area Internal Struts
06	FW 223	Absorber system accessories	Nozzles and flanges Inspection doors & Man holes Viewing ports Antifoam dosing equipment Suction strainers- FRP
07	FW 226	Emergency Quench water tank	Base Plate & its supports Roof, Shell
08	FW 227	Emergency Quench System	Emergency Quenching Spray Pipe Nozzle for Emergency Pipe Fasteners Gaskets
09	FW 230	Air oxidation System	Oxidation Blowers Common Base Plate Coupling and Guard Anchor Bolts & Fasteners Expansion Bellow Suction & Discharge Silencers Acoustic Enclosure Water Injection cooling system

Sl No	SURFACE LOCATION	PGMA	SURFACE PREPARATION	PRIMER		FINISH		TOTAL DFT IN (µm min.)
				PAINT	DFT (µm min.)	PAINT	DFT (µm min.)	
				Pipe, Valves & Instruments Special Tools				

SNO	PGMA	PGMA DESCRIPTION	PGMA DETAILS
10	FW 244	Oxidation air distribution System	Pipe & Fittings Flanges Pipe Hanger, Bottom Elbow, Bottom sliding supports
11	FW 251	Expansion joint between bypass	Expansion joints Seal Plates & Fasteners
12	FW 252	Expansion joint between scrubbers	Fabric & its fixing fasteners Sleeves & Flanges Gaskets
13	FW 255	Ducts between bypass duct inlet & booster fan	Plates & Stiffeners Guide Vanes
14	FW 256	Ducts between Booster fan & Absorber	Plates & Stiffeners Guide Vanes
15	FW 257	Ducts between Absorber & stack	Plates & Stiffeners Guide Vanes
16	FW 260	Duct structure between bypass duct& Booster fan	Duct Supports Gusset Plate Divider plate Internal Struts Support bearings
17	FW 261 FW 262	Duct structure between booster fan& absorber & Absorber and Stack	Duct Supports Gusset Plate Divider plate Internal Struts Support bearings
18	FW 292	Structures for Elevator	Columns Seal Plate Bracings Enclosure (Purlin& sheeting)
19	FW 293	Elevator and accessories	Base Frame Buffer Spring Mast Section Cage Control Panel & AC Mandatory Spares

Sl No	SURFACE LOCATION	PGMA	SURFACE PREPARATION	PRIMER		FINISH		TOTAL DFT IN (µm min.)
				PAINT	DFT (µm min.)	PAINT	DFT (µm min.)	

SNO	PGMA	PGMA DESCRIPTION	PGMA DETAILS
20	FW 310	Structures for booster fan handling	Columns Beams Bracings Seal plate
21	FW 610 FW 722	Galleries & railings for Scrubbers, Tank	Stairs Handrail Step treads Floor grills Ladders Foundation bolts Fasteners
22	FW 701	Slurry pumps & accessories	Slurry Pumps incl Shaft seal Common Base Plate Coupling and Guard Belt & Pulley Expansion Bellow Anchor Bolts & Fasteners Motor & accessories Sump Pumps incl Shaft seal Common Base Plate Coupling and Guard Belt & Pulley Anchor Bolts & Fasteners Motor & accessories
23	FW 710	Monorail for hoist& cranes	Insert Plate Stiffener plate Monorail beam
24	FW 721	Agitator support	Channels & Beams
25	FW 730	Limestone silo structures	Columns Beams Bracings Seal plate Angles, channels

Sl No	SURFACE LOCATION	PGMA	SURFACE PREPARATION	PRIMER		FINISH		TOTAL DFT IN (µm min.)
				PAINT	DFT (µm min.)	PAINT	DFT (µm min.)	

SNO	PGMA	PGMA DESCRIPTION	PGMA DETAILS
26	FW 731	Limestone silo	Base plate & its supports Shell, Roof
27	FW 723 FW 724 FW 725	Air cannon Bag filter Nozzles & flanges	Bag filter Air cannon bin activator Nozzles & Flanges
28	FW 733	Limestone silo approach platforms	Stairs Handrail Step treads Floor grills Ladders Foundation bolts Fasteners
29	FW 734	Limestone mill	Wet ball mill Hydro cyclone- Mill area Mill circuit pump Mill separator tank with Agitator
30	FW 742	Lime stone slurry storage tank	Base plate & its supports Shell, Roof
31	FW 743	Auxiliary Absorber tank	Base plate & its supports Shell, Roof
32	FW 744	Filtrate tank	Base plate & its supports Shell, Roof
33	FW 745	Wastage water tank	Base plate & its supports Shell, Roof
34	FW 747	Hydro cyclone waste water tank	Base plate & its supports Shell, Roof
35	FW 748 FW 785 FW 786	Process Water tank Belt filter washing tank Primary Hydro cyclone feed tank	Base plate & its supports Shell, Roof
36	FW 751 FW 752	Process water pipe accessories Cooling water pipe accessories	CS/FRP Pipes & Fittings Sight Glass R Orifice Gaskets & Fasteners
37	FW 753	Slurry pipe accessories	CSRL/FRP Pipes & Fittings Strainer (Cone) Expansion Joint-Rubber R Orifice Gaskets & Fasteners