INVENTORY NO.	SIGN & DATE	REF. DRG. NO.	THIS INFORMATION ON THE DOCUMENT IS THE PROPERTY OF BHARAT HEAVY ELECTRICALS LIMITED. IT MUST NOT BE USED DIRECTLY OR INDIRECTLY IN ANY WAY DETRIMENTAL TO THE INTEREST OF THE COMPANY.
		POW313748. DWG	

FIRST ANGLE PROJECTION

DRAWING NO. 3 460 19 50 000

12R 6 HOLES ø7

भारत हेवी इलेक्ट्रिकल्स लिमिटेड झाँसी
BHARAT HEAVY ELECTRICALS LIMITED JHANSI

स्टेशन परिणामित — STATION TRANSFORMER

भारतीय मानक 2026-1977 के अनुसार
TO INDIAN STANDARD 2026-1977

TYPE OF COOLING	ONAN	ONAF	OFAF
RATING HV (M.V.A)	48	64	80
* RATING LV1 (M.V.A)	27	36	45
* RATING LV2 (M.V.A)	21	28	35
NO LOAD VOLTAGE H.V. (kV)	400		
NO LOAD VOLTAGE LV1 (kV)	11.5		
NO LOAD VOLTAGE LV2 (kV)	11.5		
LINE CURRENT H.V. (AMPS)	115.5		
LINE CURRENT LV1 (AMPS)	2259.19		
LINE CURRENT LV2 (AMPS)	1757.15		
TEMPERATURE RISE OIL (°C)	50		
TEMPERATURE RISE WINDING (°C)	55		

PHASE	3
FREQUENCY (Hz)	50
CONNECTION SYMBOL	YNyn0yn0
IMPEDANCE VOLT AT 60 MVA BASE: HV POSITION 1/ LV1	19% ABOV TOL.
IMPEDANCE VOLT AT 60 MVA BASE: HV POSITION 1/ LV2	19% ABOV TOL.
IMPEDANCE VOLT AT 60 MVA BASE: LV1 / LV2	20% ABOV TOL.

INSULATION LEVEL

H.V	LI 1425 - AC 38
LV1 & LV1 N	LI 75 AC 28
LV2 & LV2 N	LI 75 AC 28

PO. REF.	TM 0816/CPP/711/KTPP-II/D0507/2008 DATED

ELEC. SPEC. No.	626605
SERIAL NO.	2032460
YEAR OF MANUFACTURE	2012
DIAGRAM DRAWING NO.	14601950000
O.G.A. DRAWING NO.	04600050310
CORE & WINDING (Kg)	74500
WEIGHT OF OIL (Kg)	42000
TOTAL WEIGHT (Kg)	153000
OIL QUANTITY (Litre)	47100
TRANSPORT WEIGHT GAS FILLED (Kg)	90000
UNTANKING WEIGHT (Kg)	14500

CUSTOMER	M/S:- APGENCO (1X600 MW KAKATIYA TPS ST-II) SET-I

○ TERMINALS ON TANK COVER

TABLE OF VOLTAGES & CURRENTS

ON LOAD TAP CHANGER: TAP POSN	CONNECTION: 3 TO	CONNECTION: IN TO	H.V. LINE TERMINALS 1U, 1V, 1W: VOLTAGE KV	CURRENT (Amps) ONAN MVA	ONAF MVA	OFAF MVA	LV1 LINE TERMINALS 2u, 2v, 2w: VOLTAGE KV	CURRENT (Amps) ONAN MVA	ONAF MVA	OFAF MVA	LV2 LINE TERMINALS 3u, 3v, 3w: VOLTAGE KV	CURRENT (Amps) ONAN MVA	ONAF MVA	OFAF MVA
1		12	430	64.4	85.9	107.4								
2		11	425	65.2	86.9	108.7								
3		10	420	66.0	88.0	110.0								
4		9	415	66.8	89.0	111.3								
5	4	8	410	67.6	90.1	112.7								
6	4	7	405	68.4	91.2	114.0								
7		6	400	69.3	92.4	115.5	11.5	1355.5	1807.3	2259.19	11.5	1054.3	1405.7	1757.15
8		5	395	70.2	93.5	116.9								
9a		4	390	71.1	94.7	118.4								
9b		3	390	71.1	94.7	118.4								
9c		12	390	71.1	94.7	118.4								
10		11	385	72.0	96.0	120.0								
11		10	380	72.9	97.2	121.5								
12		9	375	73.9	98.5	123.2								
13	12	8	370	74.9	99.9	124.8								
14		7	365	75.9	101.2	126.5								
15		6	360	77.0	102.6	128.3								
16		5	355	78.1	104.1	130.1								
17		4	350	79.2	105.6	132.0								

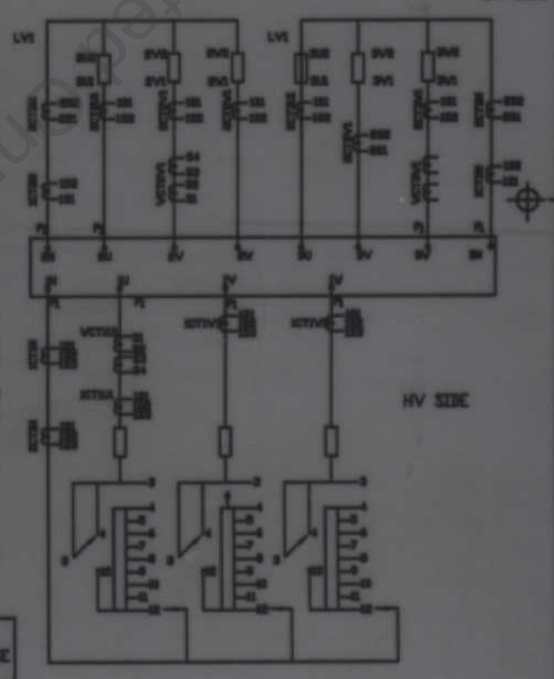

CT DETAILS

CLATURE	RATIO & TERMINAL MARKING	ACCURACY CLASS	BURDEN VA	KNEE POINT VOLTAGE MIN (VOLTS)	MAG. CURRENT (Ma. (MAX) (at Vk/2)	SECONDARY RESISTENCE AT 75°c	PURPOSE
1CT1U1 1CT1V1 1CT1W1	250-125/1 1S1-1S2-1S3	PS	-	>250-125	<60-120	<1.0-0.5	PROTEC.
1CT1N	250-125/1 1S1-1S2-1S3	PS	-	>250-125	<60-120	<1.0-0.5	PROTEC.
2CT1N	250-125/1 1S1-1S2-1S3	5P20	10	-	-		
1CT2U1 1CT2V1 1CT2W1	2500/1 1S1-1S2	PS	-	>500	<30	<10	PROTEC.
1CT2N	2500/1 1S1-1S2	PS	-	>500	<30	<10	PROTEC.
2CT2N	500/1 2S1-2S2	5P20	15	-	-		PROTEC.
1CT3U1 1CT3V1 1CT3W1	2500/1 1S1-1S2	PS	-	>500	<30	<10	PROTEC.
1CT3N	2500/1 1S1-1S2	PS	-	>500	<30	<10	PROTEC.
2CT3N	500/1 2S1-2S2	5P20	15	-	-	-	PROTEC.
VCT1U1	1357/2.5-3.0-2.5 S1-S2-S3-S4	5	-	-	-	1.6	HV VTI+RTD
VCT2V1	2259.19/3.3-2.5-2.5 S1-S2-S3-S4	5	-	-	-	1.6	LV1 VTI+RTD
VCT3V1	1757.15/2.5-2.5-1.5 S1-S2-S3-S4	5	-	-	-	1.6	LV2 VTI+RTD

टिप्पणियाँ:- 1. ऊपर दी सारणी में शून्य भार वोल्टता दिखायी गई है। 2. परिणामित के आरेखित टर्मिनल लगभग लगभग वहीं दिखायी अनुसार है।
3. टंकी कोर और कुंडलन के साथ पूर्ण निर्वात के लिए उपयुक्त है।
4. निरीक्षण द्वार इंसेक्शन और टेस्ट के लिए प्रवेश से : नीचे तेल पर बनाया दिखायी।

NOTES:- 1) THE ABOVE TABLE GIVES VOLTAGE AT NO LOAD.
2) THE RELATIVE TERMINAL POSITIONS ON TRANSFORMER ARE APPROXIMATELY AS SHOWN
3) THE TANK IS SUITABLE FOR FULL VACUUM WITH CORE AND WINDING INSIDE.
4) EARTHING CONNECTION BETWEEN CORE & END FREME (YOKE) & TANK SHOULD BE REMOVED BEFORE LIFTING THE TANK COVER.

W.O- 70137N19800

भारत में निर्मित — MADE IN INDIA

370

(ALL DIMENSIONS ARE IN mm)

NOTE TO SHOP:-
1. ENGRAVE MAKE'S SERIAL NO.YEAR OF MANUFACTURE.
2. ENGRAVE VOLTAGE ON EACH PLATE AFTER JOB IS TESTED.
3. ENGRAVED LETTERS TO BE FILLED WITH BLACK PAINT.

NOTES TO DIAGRAM PLATE MANUFACTURER
1. CONSULT DRAWINGS BEFORE ENGRAVING VECTORS AND OIL QUANTITIES.
2. RATING PARTICULARS TO BE ENGRAVED OR MACHINE STAMPED AND FILLED IN BLACK HARD STAMPING NOT PERMITTED.

2.LETTERING:-
LETTER HEIGHT FOR VARIOUS HEADINGS SHALL BE AS PER TABLE - 1.
ELECTRICAL CONNECTS HEXAGRAM TO BE AS PER STANDARD AS GIVEN OF SIZE 4MM.

3.FINISH:-
PLATES ARE TO BE MANUFACTURED BY ETCHING PROCESS. BALL LETTERS,SEVERING LINES,BORDER LINES & FIGURES ETC. TO BE BLACK.
4.THE BETTING OF THE DIAGRAM PLATE SHOULD BE DONE AS NEAR AS POSSIBLE TO DRAWING.
5.BORDERLINE IS TO BE DONE IN PLATE BEFORE ENGRAVING OR MACHINING.
6. DRAWING NO.&REVISION REVISION VARIOUS DRAWING TO BE PAINTED ON THE BACK OF THE PLATE.

7.PACKING:-
RATING & DIAGRAM PLATE TO BE SUITABLY PACKED IN POLYTHENE COVERS AND HOLDING THEMSELVES TO AVOID DAMAGE DURING TRANSIT / STORAGE.

8.MATERIAL:-
FOR STAINLESS STEEL LATHCHIX AND DRILLING OF PLATE SEE DRAWING NO. 44990000.

9.NOTES TO CUSTOMER:-
1 - THE RATING & DIAGRAM PLATE IS MADE OF ANODISED STAINLESS STEEL.
2.- SEE NOTE TO SHOP ALSO.
3.- VECTORS AND OIL QUANTITIES ARE APPROXIMATE AND FINAL VALUES SHALL BE FURNISHED AFTER FINALISATION OF DESIGN.

TABLE - 1

SIZE OF THE RATING PLATE	LETTER SIZE
HEADING	ENGLISH
BHARAT HEAVY ELECTRICALS LIMITED JHANSI	8
TYPE OF PRODUCT	6
NAME OF EQUIPMENT	6
RATING PARTICULARS NOMENCLATURES	4
NOTES	3

CUSTOMER ORDER REF.	TM 0816/CPP/711/KTPP-II/D0507/2008		
TYPE OF PRODUCT OR NAME OF CUSTOMER/PROJECT	80 MVA 400/11.5-11.5 KV 3-PHASE ONAN/ONAF/OFAF COOLED STATION TRANSFORMER M/S:- APGENCO (1X600 MW KAKATIYA TPS ST-II)		
BHARAT HEAVY ELECTRICALS LTD. JHANSI	DRN S.K.YADAV	SIGN	DATE 29.08.11
	CHD		NO. OF VAR. —
	APPD DKA		
SCALE —	WEIGHT (KG) —	REF. TO ASSY. NO. 3 460 00 50 310	ITEM NO. —
		DRAWING NO. 3 460 19 50 000	NO. OF ITEM —
CARD CODE		SHEET NO. 01	NO. OF SHEETS 01
			REV. 02

TITLE: RATING & DIAGRAM PLATE

DEPT. TRE CODE 406 | GRADE OF UN. TOL. DIN. GAUGE

SIZE A3

REV	DATE	ALTERED	CHECKED
02	30.01.12		

DRG REVISED TO CORRECT VTI CT PARAMETERS

DCAT 13100

REV	DATE	ALTERED	CHECKED
01	21.11.11		

DRG REVISED AS PER DESIGN/CUSTOMER COMMENTS

DCAT 13000

ADDITIONAL INFORMATION WO. 70137N19800

STATUS OF DRAWING U

DISTRIBUTION OF PRINTS TRE-1, TRP-1, BAY1&2-2, BAY9-4,