FIRST ANGLE PROJECTION

(ALL DIMENSIONS ARE IN mm)

FORM DG 38(B)

DRAWING No. 3-13137-V6001

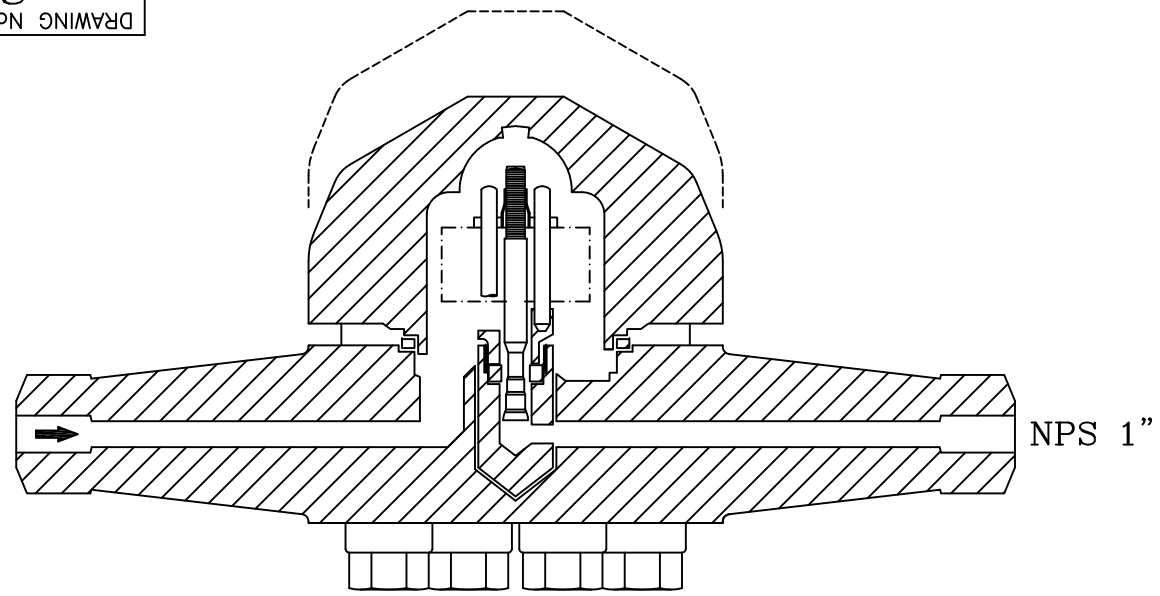

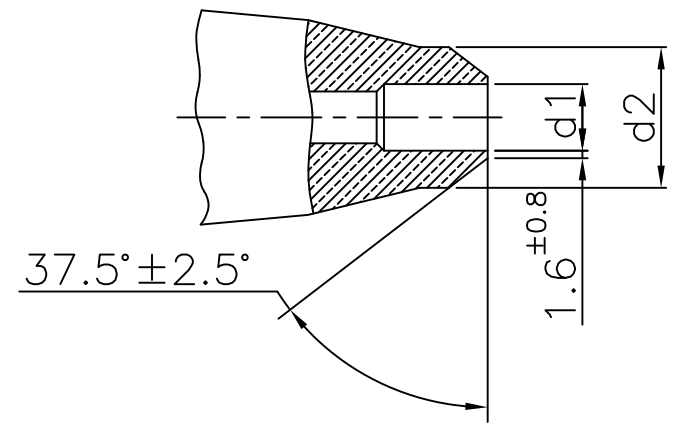

BUTT-WELD ENDS

DESIGN DATA AND PIPE CONNECTION LIST FOR STEAM TRAP (THERMOSTATIC BIMETALLIC TYPE):-

	VAR 01	VAR 02	VAR 03	VAR 04	VAR 05	VAR 06	VAR 07
TAG NO OF STEAM TRAP	MAL41 AA041	MAL11 AA041 MAL12 AA041 MAL19 AA041	MAL14 AA041	MAL23 AA041 MAL24 AA041 MAL26 AA041 MAL27 AA041 MAL31 AA041	MAL65 AA041	MAL22 AA041	MAL20 AA041
MATERIAL OF STEAM TRAP	ASTM A182 F11	ASTM A182 F91/F92	ASTM A182 F22	ASTM A 182 F91/F92	ASTM A 182 F22	ASTM A 182 F91	ASTM A 182 F91
MAX. INLET PR.(g)	100.3 bar	290 bar	63 bar	67 bar	77 bar	197 bar	187 bar
MAX. INLET/OUTLET TEMP.	445°C	608°C	524°C	608°C	510°C	584°C	586°C
d1	26.64 mm	15.22 mm	26.64 mm	20.7 mm	24.3 mm	20.7 mm	20.7 mm
d2	33.4 mm	33.4 mm	33.4 mm	33.4 mm	33.4 mm	33.4 mm	33.4 mm
HYDROSTATIC TEST PR.(bar)	150 (min.)	435 (min.)	104 (min.)	101 (min.)	115 (min.)	295 (min.)	280 (min.)
TYPE OF END CONNECTION	BUTT WELD	BUTT WELD	BUTT WELD	BUTT WELD	BUTT WELD	BUTT WELD	BUTT WELD

OUTLET PRESSURE IS ATMOSPHERIC PRESSURE.

NOTE:- THIS DRAWING SHALL BE READ WITH DOC. NO. 413137W1401.

GRADE OF UNTOL.DIM
M/CG.-C/M/F AA0230208
WELDING-A/B/C/D AA0621104
GAS CUTTING-'T3'AA0621101

REV	DATE	ALTERED / CHECKED	REV	DATE	ALTERED / CHECKED

GMS No./C B O M			STATUS OF DRG U
AGREED DEPT	NAME	SIGN	DATE

TYPE OF PRODUCT
OR
NAME OF CUSTOMER/PROJECT

BHARAT HEAVY ELECTRICALS LTD.
RANIPUR, HARDWAR

	NAME	SIGN	DATE
DRN	P.S.SHARMA	-sd-	12.05.18
CHD	ANIL	-sd-	12.05.18
APPD	S.K.GUPTA	-sd-	12.05.18

NO. OF VAR — (73 74)

DEPT PED
CODE 4066

SCALE N.T.S.

WEIGHT (KG) —

REF. TO ASSY. DRG. ——

ITEM No. ——

NO. OF ITEMS — (75 77)

TITLE : STEAM TRAP
THERMOSTATIC (BIMETALLIC TYPE)

CARD CODE

DRAWING NO. 3-13137-V6001 (7 22)

REV. 00 (23 24)

SHEET No. 01 | No. OF SHEETS 01

SIZE A3

Ref.Drawing No.

Sign & Date

Inventory No.

COPYRIGHT AND CONFIDENTIAL
THE INFORMATION ON THIS DOCUMENT IS THE PROPERTY OF BHARAT HEAVY ELECTRICALS LIMITED. IT MUST NOT BE USED DIRECTLY OR INDIRECTLY IN ANY WAY DETERIMENTAL TO THE INTEREST OF THE COMPANY.