NTPC LIMITED

(A Govt. of India Enterprises)

FLUE GAS DESULPHURISATION (FGD) SYSTEM

KAHALGAON SUPER THERMAL POWER STATION

STAGE I & II (4X210 MW + 3X500 MW)

TECHNICAL SPECIFICATION – MECHANICAL PORTION

FOR

RACK & PINION TYPE ELEVATOR FOR CHIMNEY

SPECIFICATION NO.: PE-TS-481-503-A001

BHARAT HEAVY ELECTRICALS LIMITED
(A Govt. of India Undertaking)

POWER SECTOR
PROJECT ENGINEERING MANAGEMENT
PROJECT ENGIEERING INSTITUTE BUILDING
SECTOR-16A, PLOT NO. 25, NOIDA, INDIA

SECTION - C
SUB SECTION – A6

STACK ELEVATORS

1. SYSTEM DESCRIPTION

1.1 The Rack and pinion type stack elevator is required for installation inside multi-flue or outside single flue chimney. The stack Elevator is normally used for the movement of the maintenance personnel and for materials such as refractory bricks, etc. for maintenance of chimney.

2. SCOPE OF SUPPLY AND SERVICES

2.1 The scope of supply and services covered under the specification are broadly described below:

2.1.1 One No. Rack and Pinion type stack elevator complete with all other accessories and associated steel work.

2.1.2 Drive motor and control panel for Stack elevator

2.1.3 Control Panel

2.1.4 Equipment earthing

2.1.5 All power and control cables, trailing cables

2.1.6 Limit switches

2.1.7 Over speed governor

2.1.8 Alarm push button in the cage connected to battery operated alarm at elevator base.

2.1.9 Reverse phase relay connected to prevent operation of the cab with improper phase rotation or failure in any phase of power supply.

2.1.10 Continuous duty electrical torque motor recoil cable reels or cable trolley or any equivalent arrangement to maintain electrical power service to all electrical components of the elevator for complete travel of stack elevator.

2.1.11 One auxiliary panel shall be provided and mounted on the graded level enclosure equipped with a main ON-OFF selector switch, main contractor, breaker, relays, control transformer and fuses, tone frequency transmitter or equivalent arrangement, terminal blocks and all other accessories required for normal operation of the elevator.

2.1.12 One main control panel shall be furnished and mounted on top of the cab. Panel shall be in enclosure equipped with necessary equipment like rectifier, battery charger charger, tone frequency receiver, contactors, breakers, control transformer and fuses, thermal overload relays, and all other equipment and accessories required for normal operation of the elevator.

2.1.13 Cab shall be controlled by semi-automatic floor selection control system. Cab shall be furnished with 240 V grounding receptacle, emergency alarm push button with normally open contact, indicating light, limit switches, and all other necessary control devices required to ensure safe and continuous cab operation. One trailing cable shall connect the main control panel to aux. Panel at ground level. Cable shall supply the cab necessary power supply requirements. Cable guides shall be installed at every 6 m intervals to avoid entanglement of this cable. Control signal between the aux. Panel at ground level, the main control panel on the cab and the landings shall be provided with tone frequency receiver or any other equivalent arrangement by trailing control cable.

2.1.14 Each landing assembly shall include a limit switch and push button control station installed and wired to a landing junction box.

2.1.15 All power cable and race way shall be provided and installed by the bidder for interconnection of the main control panel, auxiliary panel and landing junction boxes. Trailing cables shall be as per relevant IS/IEC standard.

2.1.16 Bidder shall provide, install and connect a system equipment ground to owner's chimney grounding system. Equipment grounding system shall electrically connect panels and junction boxes which contain electrical devices, motors and elevator platform and structures. Raceway system shall not be considered as an equipment ground.

2.1.17 All enclosures containing electrical devices shall be provided with 240 V, single phase heaters with adjustable thermostat control.

2.1.18 Cab shall be equipped with a 240 V AC interior light and duplex outlet.

2.1.19 Cable accessories as required to install the cables in bidder's scope shall be provided by the bidders.

2.1.20 Complete erection, testing and commissioning including all erection materials, consumables and other tools and tackles required for erection along with commissioning spares.

2.1.21 All inserts, anchor bolts, sleeves, anchoring steel and any other items required to complete the job satisfactorily shall be in bidder's scope.

2.1.22 First fill of lubricant and consumables shall be in bidder's scope.

2.1.23 Satisfactory running and maintenance of elevator for a continuous period of 30 days including training of owner's operators.

2.1.24 Supply of One complete set of special maintenance tools and tackles shall be in bidder's scope.

2.1.25 Any other equipment or accessories not specified, but required for the satisfactory operation of chimney elevator shall be in bidder's scope.

2.1.26 Recommended spares including instrumentation for 3 years of normal operation of stack elevator. (List to be furnished by the bidder and for which order shall be placed separately by owner as per their requirements)

3. SPECIFIC REQUIREMENTS

3.1 The equipment supplied, erected and commissioned shall meet the technical requirements of respective Section –D and Data Sheet-A.

3.2 Bidder shall note that all QP and Field quality plans shall be subject to purchaser's approval.

3.3 All equipment offered shall have suitable provision of termination and connection of power and control cables inclusive of cable boxes, lugs and glands, etc.

3.4 All the equipment shall be suitable for the power supply fault level and other climatic conditions as indicated in project information.

3.5 The bidder shall guarantee the rating and performance parameters of the system/equipment offered in accordance with specification requirements.

3.6 It is the responsibility of bidder to arrange license for operation of chimney elevator from statutory body of that area before handing over.

3.7 Bidder shall furnish deviation (clause wise) in the deviation schedule. In absence of dully filled deviation list, it will be presumed that offer is exactly in line with the technical specification.

3.8 Bidder shall furnish duly filled data sheet –B along with the offer. In absence of same, offer shall be treated as incomplete.

3.9 Bidder shall offer the stack elevator considering prevailing statutory and regulatory requirements of project location.

3.10 Bidder shall indicate degree of protection of various electrical equipment in the offer.

3.11 Makes of all bought out items shall subject to purchaser's approval after award of contract.

3.12 All drawings/documents shall subject to purchaser's approval after award of contract.

3.13 Please refer / comply customer- NTPC specification *(rack & pinion type elevator)*

DATA SHEET

1	Designation Elevator	:	Rack and Pinion Type Stack
2	Type of loading	:	Passenger cum goods
3	Quantity project requirement.	:	2 nos. for 180 M high Chimney. 3 nos. for 150 M high Chimney.
4	Carrying Capacity	:	400 Kg (approximately)
5	Pay load	:	400 Kg min.
6	Operating Speed	:	40 m/min.
7	Dimension of lift and lift well/cut out	:	As per IS: 3534
8	No. of landings	:	**For 150 M High Chimney=** Four (04) nos. including ground (0.0m, 47m, 92m, & last landing at 137m). **For 180 M high Chimney =** **Five** (05) nos. including ground (0.0m, 46m, 87m, 128m, & last landing at 169m).
9	Total vertical travel	:	137 m & 169 m.
10	Electrical power supply system	:	415 V, 3 ph, 50 Hz
11	Other accessories	:	As required

CLAUSE NO.	TECHNICAL REQUIREMENTS

3.14.10	**Rack and Pinion Elevator** A rack and pinion elevator, with a load carrying capacity of 400 kg (min) (passenger cum goods), cabin floor size of 1100 mm x 1000 mm (min.) and an operating speed of 40 m/min. (approx.), shall be provided for travel from the grade level to the top of the chimney. A landing platform shall be provided at all access/ platform levels. The elevator shall be of a proven and approved make. Enclosure shall be fabricated from tubular steel and expanded metal or wire mesh, 2.1 m high (Approx.). A Safety device comprising of an over speed governor in constant mesh with the rack by means of a flame hardened steel pinion shall be provided to protect the cab against over speed during the cab downward motion and the same shall actuate the brake mechanism and stop the down ward motion gradually. The lift shall be installed using anchor fasteners. The electrical requirement of the system shall conform to the main electrical specification. Drive motor shall be of S3 duty class with CDF of 25% and maximum number of 120 starts per hour in 55 degree Celsius ambient temperature.

CLAUSE NO.	TECHNICAL REQUIREMENTS
	The motor shall be provided with internal 220V AC single phase space heaters or an alternate heating system. The elevator shall be supplied, installed, painted, tested, commissioned etc. complete with all mandatory spares (as specified in Part-F of this specification) and operation maintenance manual

SECTION - D
SUB-SECTION – A6

STACK ELEVATOR

1. DESIGN AND CONSTRUCTION

1.1 Stack Elevator - General

1.1.1 The stack elevator including mechanical and electrical components shall be installed outside/inside Single flue/ multi flue chimney. Since chimney is a free standing structure, deflection of chimney top is expected during the normal operation, so the design of the elevator shall be in such a way that the elevator operation will be safe even with the expected maximum deflection of the chimney structure. The stack elevator shall lift a pay load as indicated against rated load as mentioned in Data sheet-A or its nearest as per manufacturer's present standard in addition to the weight of the car and its accessories and shall travel at a rated speed as indicated in the data sheet-A. Travel of the elevator car, number of landings and levels shall be as per Data sheet-A attached to this section.

1.1.2 Stack elevator mechanical and electrical operating devices and trailing cable shall be designed for operation indoors/out door with dusty and high humidity conditions and shall operate equally well in any ambient temperature encountered in the site conditions. Additionally, all mechanical and electrical components of the elevator shall be designed to withstand without damage a temperature of 100oC when the elevator is not operating.

1.1.3 Cage earthing shall be done through trailing cable.

1.1.4 Stack elevator shall be attached to the chimney shell using expansion type anchor bolts drilled in to chimney shell. Elevator shall be capable of operating from the ground floor to the top platform with intermediate stops at all platforms. Landing for elevator parking shall be one (1) metre above the stack ground floor. Suitable concrete/brick steps leading to the landing for entry to cabin shall also be provided,

1.1.5 The stack elevator shall be designed in line with recommendations contained in the latest editions of the applicable codes and standards.

1.2 Equipment Specification

1.2.1 Enclosures

i. A three-sided enclosure with one access door shall be provided at graded level. At each platform landing above graded level, a one sided enclosure with access door shall be provided. Enclosures shall be fabricated from tubular steel and expanded metal or wire mesh, 2.1 m high and one coat of epoxy primer coated. Enclosure access doors shall be electrically and mechanically interlocked so that they remain closed and locked except when the Cab is at the landing. Doors shall be bi-parting and swinging type.

ii. Base of three-sided enclosure shall be securely anchored to the grade level floor slab using expansion type anchors.

1.2.2 Mast

i. Mast shall be provided in sections approximately 1.52 m in lengths considering of tubular sections and/or structural shapes welded together to form a frame work to which the rack is bolted. Mast shall be securely anchored to the concrete chimney walls.

1.2.3 Cab

i. Cab frame shall be fabricated from tubular steel and enclosed with expanded metal or wire mesh.

ii. Cab floor shall be of skid resistant glass fibre reinforced plywood or approved equal. Cab shall be attached to a framed structure and form integral part with the drive mechanism located atop the cab.

Framed structure shall include guide rollers and safety hooks to ensure positive engagement of the rack and pinion to prevent cab disengagement in case of roller failure.

1.2.4 Buffers

i. Sufficient numbers of buffers of spring loaded/hydraulic type shall be fitted below the cab. The buffers shall be capable of stopping the cab without permanent damage or deformation to themselves or any other part of the equipment. The number of buffers shall be so fixed as to ensure proper sharing of impact loads by all of them.

1.2.5 Drive unit and safety Device

i. Drive unit located on the top of the cab shall be complete with Ac squirrel cage induction motor, reduction gear, drive pinion and an over speed governor. Drive unit shall incorporate an electric disc brake and an external manual brake release. The brake on the electric motor will be of the electromagnetic single disc self-adjusting type with the mechanical compression spring being held off by the electromagnet.

ii. The hoist shall be provided with a centrifugal brake to prevent accidental tripping of safety device when the cage shall be taken to the ground by gravity in case of power failure.

1.2.6 Power and Control

i. All electrical components furnished with the elevator shall be completely wired, energised and checked. Necessary power distribution arrangement shall be provided by the contractor to feed the electrical power to the elevator.

ii. All electrical control devices shall be in enclosures. Equipment furnished shall also include the following:

a) Momentary contact push button for raise lower control.

b) Reversing combination motor starter with a moulded case circuit breaker for the motor. Starter shall be equipped with three thermal overload relays for motor protection. Operating handle for the combination starter circuit breaker shall be accessible from inside the cab and shall also serve as an emergency stop switch.

c) Electrical and mechanical interlocks on cab access door and landing level enclosure doors.

d) Over travel protection, emergency stop push button, over speed governors.

e) All electrical and mechanical interlocks on cab access door and landing level enclosure doors, phase reversal protection shall be provided.

f) An alarm push button shall be provided in the cage connected to a battery-operated alarm at the elevator base. Simultaneous alarm shall also sound at the plant control room in the event of any fault in the stack elevator for which one potential free contact shall be provided in each elevator for audiovisual alarm in PCR for “Stack Elevator fault” indication.

g) Reverse phase relay connected to prevent operation of the cab with improper phase rotation or failure in any phase in the power supply.

h) Continuous duty electric torque motor recoil cable reels as required to maintain electrical power service to all elevator electrical components throughout the limits of travel.

i) One auxiliary panel shall be furnished and mounted on the grade level enclosure. Panel shall be equipped with a main 'ON-OFF' isolating switch, main contactor, relays, control transformer and fuses, tone frequency transfer, terminal blocks and all other accessories required for normal operation of the elevator.

j) One main control panel shall be furnished and mounted on the top of the cab. Panel shall be equipped with necessary, equipped like rectifier, battery, charger, tone frequency receiver, contactors, MCBs, control transformer and fuses, thermal overload relays, and all other equipment and accessories required for normal operation of the elevator.

k) Control cabinets shall be sheet steel enclosed and shall be dust, weather and vermin proof. Sheet steel used shall be cold rolled and at least 2.0 mm thick and properly braced to prevent wobbling. Degree of protection of the control cabinets shall be IP-52 as per IS:2147. Control cabinets shall be provided with hinged door(s) with padlocking arrangement. All doors, removable covers and plates shall be gasket all around with neoprene gaskets, louvers, when provided, shall have screeners and filters. The screens shall be of fine wire mesh made of brass or GI wire. Suitable cable gland plate shall be supplied fitted on to this gland plate. All cable glands shall be screwed on type and made of brass.

l) Each motor to be controlled from the control cabinet shall be provided with 3 pole isolating switch. HRC fuses, contactors of AC4 duty class with thermal overload relays with single phasing preventer and other equipment required for satisfactory control motor. The isolating switch and contractor shall be rated at least 20% more than the connected motor full load current. Motors of 0.2 KW and above shall be rated for 415 V 3 Phase and below 0.2 KW will be 240 V single phase supply.

m) The controllers and resistors for motors shall conform to IS-8544 (latest edition) and IS-2959 (latest edition) and shall be continuously rated for 150% full load current of the motor. Switches shall be hand operated, air breaker heavy duty, quick make, quick break type conforming to IS-4064. The rating of switch shall be so chosen as to get complete protection by associated O/L relay or fuse under all normal / abnormal conditions such as full load, overload, locked rotor, short circuit. The incoming power supply isolating switch shall be inter-locked with the control cabinet door so as to prevent opening of the door when the switch is closed. Device for bypassing the door interlock shall also be provided. Switch handle shall have provision for locking in both fully open and fully closed positions.

n) All fuses shall be of the HRC cartridge type mounted on plug in type of fuse base having a prospective current rating of not less than 80 KA. Fuses shall be provided with visible operation indicators to show that they have operated. All accessible live connections shall be adequately shrouded and it shall be possible to change fuses with the circuit alive without danger of contact with live metal.

o) Contractor shall provide dry type transformers with class B insulation for control power supply, lighting and space heating. Control supply will be 240 V AC.

Transformer for control supply shall be provided with a control tap at 110 V, which will be earthed. Power and control supply to individual drives and users shall be distributed with separate isolating switches and primary and secondary fuses.

p) All push buttons shall be of push to actuate type having 2 “NO” and 2 “NC” self reset contacts. They shall be provided with integral escutcheon on plate engraved with their functions. Push button contacts shall be rated for 5 Amp at 415 V AC and 1 Amp. Inductive breaking at 250 V, DC. Mushroom type emergency push button to open the main contactor shall be provided in the operator’s cabin and two on the bridge platform within easy reach indicating lamps shall be of the filament type and low watt consumption lamps shall be provided with series resistors.

q) Strip type space heaters of adequate capacity shall be provided inside in each cabinet.

r) Control cabinets shall be supplied completely wired. All wiring shall be carried out with 650 V grade PVC insulated, stranded conductors. Power circuits shall be wired with stranded aluminum conductors of adequate sizes to suit the rated circuit shall be wired with stranded copper conductors of sizes not small than 1.5 Sq.mm. Control circuits shall be isolated from power circuits.

s) Cab shall be controlled by a semi-automatic floor selection control system. Cab shall be furnished with 240 Volt grounding type receptacle, emergency alarm push button with a normally open contact rated 0.5 ampere at 220 VDC volts, indicating light, limit switches, and all other necessary control devices required to ensure safe and continuous cab operation. One trailing cable shall connect the cab main control panel to the auxiliary panel at ground level. Cable shall supply the cab with all power requirements. Cable guides shall be installed at every 6 metres to avoid entanglement of this cable. Control signals between the auxiliary panel at ground level and the main control panel on the cab. Will be provided with the tone frequency receiver. However control and interlocks from the landings shall be connected to the auxiliary panels located at ground level through fixed armoured cables. The power and control cables and training power cables shall be FRLS type.

t) Each landing assembly shall include a limit switch for door interlock and push button control station installed and wired to a landing junction box.

u) Cable trolley with cable guides for recoil of cable on to cable reel to maintain electrical power service to all elevator components through out the limits of travel.

v) Contractor shall furnish, install, and connect a system equipment ground to the Owner’s existing chimney ground system. System equipment ground shall electrically connect panels and junction boxes, which contain electrical devices, motors, and elevator platforms and support structure. Raceway system shall not be considered as an equipment ground.

w) All enclosures containing electrical devices shall be provided with 240 Volt, single-phase space heaters with adjustable thermostat control.

x) All power cables and race way shall be furnished and installed by the Contractor for interconnection of the main control panel, auxiliary panel and landing junction boxes etc. Conductors included in the cable shall be as required to energise all electrical equipment furnished with the elevator. Transmission of

alarm signals is done by means of tone frequency equipment. Hence communication conductors are not required.

1.2.7 Electric Motor

i. Elevator drive motor shall be squirrel-cage induction type designed and fabricated to conform to the requirements indicated below.

ii. Motor shall be designed for operation at the required speed: 415 Volts, 3 phase, 50 hertz. And shall be suitable for full voltage starting, S4 duty class as per IS-4722 with CDF of 25% and maximum number of 120 starts per hour in 55 Deg. C ambient temperature. Motor shall be tested at the factory to determine that it is free from electrical or mechanical defects.

1.2.8 Raceway

i. General

a) Complete raceway system for the elevator shall be furnished and installed in accordance with this section and the Contractor's shop drawings as reviewed and accepted by the Engineer-in-Charge. The Contractor shall provide drawings for acceptance showing the routing of conduit and wiring for the control circuits associated with the elevator.

b) Raceway system is defined to include conduit and all related materials and devices required to support, secure and provide a complete system for support and protection of electrical cable and wiring.

ii. Materials

a) Raceway shall be rigid galvanized steel conduit, provided in accordance with IS-1653 (latest edition).

b) Steel conduit, couplings, and elbows shall be hot-dip galvanized rigid mild steel. Each length of threaded conduit shall be complete with a coupling on one end and a thread protector on the other. Thread protector shall have sufficient mechanical strength to protect the threads during normal handling and storage. Flexible conduits shall be plastic jacketed, liquid tight galvanized steel.

c) Galvanized iron or galvanized cast steel fittings shall be used with galvanized steel conduit. Fittings installed outdoors or in damp locations shall be sealed and gasketted. Outdoor fittings shall be of heavy cast construction.

1.2.9 PVC Insulated FRLS Cable

i. Materials

a) Electrical part of this specification shall be referred for FRLS cable. Unless specified otherwise, Contractor shall submit to the Engineer-in-Charge four copies of the manufacturer's test report on each cable furnished. Conductor accessories including terminal materials like glands, lugs etc. makers, tying materials and cable support shall be furnished and installed. Wire termination materials for conductors 10 Sq. mm and larger shall be pressure or bolted type. Terminals for conductors smaller than 10 Sq. mm shall be an insulated pressure connection in the shape of a ring.

ii. Installation

a) Power and control cable shall be routed as required by the drawings. Cables pulled into the wrong conduit or cut too short shall be replaced. Cables removed from one conduit shall not be installed in another conduit.

1.2.10 Earthing

i. General

a) Earthing system furnished and installed and include a complete earthing system for the elevator. Earthing equipment and materials shall be furnished and installed in accordance with the reference codes and standards these specifications and the contractor's shop drawings as reviewed and accepted by the Engineer-in-Charge.

ii. Materials

a) The earthing of all electrical items being supplied by the Bidder shall be in his scope. For earthing the various equipment, conductor sizes shall be as listed below:

- MCCs Motor above 90 KW : 50 x 6 Sq.mm G.I. flat
- Motors above 30 KW, upto 75 KW and lighting panel/ control panels/auxiliary panels : 25 x 6 Sq. mm G.I. flat
- Motor above 5 KW upto 30 KW : 25 x 3 mm G.I. flat
- Motors upto 5 KW and misc. : 8 SWG GI wire
- Small item like conduits,
- Junction boxes etc..

1.00.00 **GENERAL**

The Bidder shall include in his scope of supply all the necessary Mandatory spares, Start-up and commissioning spares and Recommended spares and indicate these in the relevant schedules of the Bid Forms & Price Schedules. The general requirements pertaining to the supply of these spares is given below:

1.01.00 **MANDATORY SPARES**

a) The list of mandatory spares considered essential by the Employer is indicated in the list enclosed to this Sub-Section. The bidder shall indicate the prices for each and every item (except for items not applicable to the bidders design) in the 'Schedule of Mandatory Spares' whether or not he considers it necessary for the Employer to have such spares. If the bidder fails to comply with the above or fails to quote the price of any spare item, the cost of such spares shall be deemed to be included in the contract price. The bidder shall furnish total population of each item for the project in the Bid Forms & Price Schedules. Whenever the quantity is mentioned in "sets" the bidder has to give the item details and prices of each item.

b) Whenever the quantity is indicated as a percentage, it shall mean percentage of total population of that item in the station (project), unless specified otherwise, and the fraction will be rounded off to the next higher whole number. Wherever the requirement has been specified as a 'set' (marked by **) it will include the total requirement of the item for a unit, module or the station as specified. Where it is specified as 'set' (marked by*) it would mean the requirement for the single equipment / system as the case may be. Also one set for the particular equipment. e.g. 'set' of bearings for a pump would include the total number of bearings in a pump. Also the 'set' would include all components required to replace the item; for example, a set of bearings shall include all hardware normally required while replacing the bearings.

c) The assembly / sub assembly which have different orientation (like left hand, right hand, top or bottom), different direction of rotation or mirror image positioning or any other regions which result in maintaining two different sets of spares to be used for subject assembly / sub-assembly shall be considered as different type of assembly/sub-assembly.

d) The Employer reserves the right to buy any or all the mandatory spare parts.

e) The prices of mandatory spares indicated by the Bidder in the Bid Proposal sheets shall be used for bid evaluation purposes.

f) All mandatory spares shall be delivered at site at least two months before scheduled date of initial operation of the first unit. However, spares shall not be dispatched before dispatch of corresponding main equipments.

g) Wherever quantity is specified both as a percentage and a value, the Bidder has to supply the higher quantity until & unless specified otherwise.

1.02.00 **RECOMMENDED SPARES**

a) In addition to the spare parts mentioned above, the Contractor shall also provide a list of recommended spares for 3 years of normal operation of the plant and indicate the list and total prices in relevant schedule of the Bid Forms & Price Schedules. This list shall take into consideration the mandatory spares specified in this Sub-Section and should be independent of the list of the mandatory spares. The Employer reserves the right to buy any or all of the recommended spares. The recommended spares shall be delivered at project site at least two months before the scheduled date of initial operation of first unit. However, the spares shall not be dispatched before the dispatch of the main equipment.

b) Prices of recommended spares will not be used for evaluation of the bids. The price of these spares will remain valid up to 6 months after placement of Notification of Award for the main equipment. However, the Contractor shall be liable to provide necessary justification for the quoted prices for these spares as desired by the Employer.

1.03.00 **START-UP & COMMISSIONING SPARES**

a) Start-up & commissioning spares are those spares which may be required during the start-up and commissioning of the equipment/system. All spares used till the Plant is handed over to the Employer shall come under this category. The Contractor shall provide for an adequate stock of such start up and commissioning spares to be brought by him to the site for the plant erection and commissioning. They must be available at site before the equipments are energized. The unused spares, if any, should be removed from there only after the issue of Taking Over certificate. All start up spares which remain unused at the time shall remain the property of the Contractor.

1.04.00 The Bidder shall include in his scope of supply all the necessary Mandatory spares, Start-up and commissioning spares and indicate these in the relevant schedules of the Bid Forms & Price Schedules. The general requirements pertaining to the supply of these spares is given below:

CLAUSE NO.	MANDATORY SPARES
2.00.00	The Contractor shall indicate the service expectancy period for the spare parts (both mandatory and recommended) under normal operating conditions before replacement is necessary.
3.00.00	All spares supplied under this contract shall be strictly inter-changeable with the parts for which they are intended for replacements. The spares shall be treated and packed for long storage under the climatic conditions prevailing at the site e.g. small items shall be packed in sealed transparent plastic with desiccators packs as necessary.
4.00.00	All the spares (both recommended and mandatory) shall be manufactured along with the main equipment components as a continuous operation as per same specification and quality plan.
5.00.00	The Contractor will provide Employer with cross-sectional drawings, catalogues, assembly drawings and other relevant documents so as to enable the Employer to identify and finalize order for recommended spares.
6.00.00	Each spare part shall be clearly marked or labeled on the outside of the packing with its description. When more than one spare part is packed in a single case, a general description of the content shall be shown on the outside of such case and a detailed list enclosed. All cases, containers and other packages must be suitably marked and numbered for the purposes of identification.
7.00.00	All cases, containers or other packages are to be opened for such examination as may be considered necessary by the Employer.
8.00.00	The Contractor will provide the Employer with all the addresses and particulars of his sub-suppliers while placing the order on vendors for items/components/ equipments covered under the Contract and will further ensure with his vendors that the Employer, if so desires, will have the right to place order for spares directly on them on mutually agreed terms based on offers of such vendors.
9.00.00	The Contractor shall warrant that all spares supplied will be new and in accordance with the Contract Documents and will be free from defects in design, material and workmanship.
10.00.00	In addition to the recommended spares listed by the Contractor, if the Employer further identifies certain particular items of spares, the Contractor shall submit the prices and delivery quotation for such spares within 30 days of receipt of such request with a validity period of 6 months for consideration by the Employer and placement of order for additional spares if the Employer so desires.
11.00.00	The Contractor shall guarantee the long term availability of spares to the Employer for the full life of the equipment covered under the Contract. The Contractor shall

guarantee that before going out of production of spare parts of the equipment covered under the Contract, he shall give the Employer at least 2 years advance notice so that the latter may order his bulk requirement of spares, if he so desires. The same provision will also be applicable to Sub-contractors. Further, in case of discontinuance of manufacture of any spares by the Contractor and/or his Sub-Contractors, Contractor will provide the Employer, two years in advance, with full manufacturing drawings, material specifications and technical information including information on alternative equivalent makes required by the Employer for the purpose of manufacture/procurement of such items.

1.28.00	**<u>MANDATORY SPARES FOR CHIMNEY ELEVATOR</u>** **(Qty. indicated are for one (1) No. Chimney Elevator)**
A.	BRAKE ASSEMBLY Qty.
	1. Brake Assembly complete 1 No.

CLAUSE NO.	MANDATORY SPARES	
B.	GEAR ASSEMBLY	
	2. Gear Assembly complete	1 No.
C.	DOOR FRONT	
	3. Bearing	3 Nos.
	4. Roller	3 Nos.
	5. Bushing (if applicable)	2 Nos.
D.	LIMIT CAMS	
	6. Sensor	3 Nos.
	7. Switch arm	3 Nos.
E.	CAB	
	8. Guide roller	100% of the total ones installed each type or min. 1 no. whichever is higher
	9. Switch	3 Nos.
F.	SLIDING DOOR	
	10. Rollers (if applicable)	4 Nos. each type
G.	MACHINERY	
	11. Guide roller	2 Nos.
	12. Pinion	2 Nos.
	13. Rubber inserts (if applicable)	12 Nos.
	14. Groove ring (if applicable)	6 Nos.
	15. Brake motor	1 No.
H.	CABLE TROLLEY BEARING (if applicable)	
	16. Bearing	3 Nos. of each type
I.	ELECTRICAL EQUIPMENTS	
	17. Contactors	1 No. of each type

18.	Auxiliary transformer	1 No.
19.	Relays	1 No. of each type & rating
20.	Switch	2 Nos. each type
21.	Rectifier	3 Nos.
22.	Limit switch	3 Nos. each type
23.	Transmitter (if applicable)	1 No. if applicable
24.	Receiver (if applicable)	1 No. if applicable
25.	Battery charger	1 No.
26.	Push Buttons	3 Nos. of each type
27.	Timers	2 Nos. of each type & rating
28.	Main drive motor with control system	1 Set

SUB-SECTION - A6

STACK ELEVATORS

1.01.00 **ELEVATOR PARTICULARS**

i) Load Carrying Capacity in Kg
ii) Type of loading for which the stack elevator is designed
iii) Type of stack elevator
iv) Rated Load in Kg
v) Speed in metre/minute
vi) Chimney height in metre
vii) Total travel height in metre
viii) No. of floors to be served
ix) Elevations of the floors to be served
x) Method of control
xi) Details of indicators and control
xii) Weight of cab complete without load in Kg
xiii) Weight of hoist cab in Kg
xiv) Efficiency of Elevator

1.02.00 GROUND ENCLOSURE

i) Size of the enclosure (Length x breadth x height)
ii) Material of construction
iii) Size of landing entrance
iv) Method of door operation
v) Electrical & mechanical interlocking Of the door provided.
vi) Method of fixing enclosure to chimney
vii) Any other details not covered above

1.03.00 LANDING ENCLOSURES

viii) Size of the enclosure (Length x breadth x height)

ix) Material of construction

x) Size of landing entrance

xi) Method of door operation

xii) Electrical & mechanical interlocking
Of the door provided.

xiii) Method of fixing enclosure

xiv) Any other details not covered above

1.04.00 MAST

i) Material of mast

ii) Section of mast

iii) Size of each piece of mast

iv) Method of fixing of mast

v) Type of mast

1.05.0 CAB

i) Internal size
(Length x breadth x height)

ii) Material of construction

iii) Type of floor

iv) Size of the cab door

v) Method of operation of cab door

vi) Electrical & mechanical interlocking provided

vii) Escape hatch, electrically interlocked

viii) Guide roller and safety hooks provided

ix) Arrangement of light/fan inside the cab.

x) Indicators & controls inside the cab.

1.06.00 ELEVATOR DRIVE UNIT

i) Location of drive unit

ii) Name of components of drive unit

1.07.00 DETAILS OF ELECTRIC MOTOR

i) Manufacturer
ii) Equipment driven by motor
iii) Type
iv) Frame size, type & designation
v) Maximum load considered for Sizing of motor
vi) Margin considered for sizing motor
vii) Rated power in KW
viii) Service factor
ix) Speed in rpm
x) Rated voltage in V
xi) Current at rated voltage
- Full load
- Locked rotor

xii) Insulation class
xiii) Type of bearing and type of lubricant
xiv) Space heater rating
xv) Duration considered for specified Ambient temperature
xvi) Applicable standard to which motor conforms
xvii) Degree of protection
xviii) Efficiency at rated output
xix) Power factor
xx) Type of mounting

1.08.00 DETAILS OF REDUCTION GEAR

i) Make
ii) Material of the gears and hardness in BHN
iii) Type of gear
iv) Gear ratio

Name of Bidder / Vendor						
Project						
Revision No.	0	1	2	3	4	5
Signature of Bidder / Vendor / Authorised Representative						
Date						

v) Gear power transmitted

vi) Input and output speed

1.09.0 DETAILS OF DRIVE AND PINION

i) Material

ii) Hardness

iii) Fixing arrangement

1.10.0 DETAILS OF RACK

i) Material

ii) Hardness

iii) Fixing arrangement

1.11.00 SAFETY DEVICE

i) Make

ii) Type of safety device

iii) Speed at which the safety device
Come into action

iv) Method operation

v) Other details

vi) Remote control for testing
The safety device

1.12.00 BRAKES

i) Manufacturer

ii) Types of brakes provided

iii) Method of operation

iv) Interlocking if any

v) Electromagnetic brake and external
Manual brake release

vi) Degree of protection

1.13.00 CENTRIFUGAL BRAKE

i) Make

ii) Details

iii) Remote control for testing

The safety device provided.

iv) Any other details of drive unit

Not covered above.

1.14.00 BUFFERS

i) No. and location of the buffers provided

ii) Type of buffers

iii) If the buffers are spring type

Furnish the following:

- Diameter of the spring in mm
- Max. Compression under extreme cond.
- No. of spring coil
- Sectional dimension
- Material of spring
- Compression /unit load

1.15.00 POWER CABLES Fixed Trailing

i) Manufacturer

ii) Type and material

iii) Rated voltage

iv) Rated current

v) Type of insulation

vi) No. of strands

vii) No. of cores

viii) Short circuit current rating

ix) Resistance per 1000 metres

Name of Bidder / Vendor						
Project						
Revision No.	0	1	2	3	4	5
Signature of Bidder / Vendor / Authorised Representative						
Date						

x) Applicable standards

1.16.00 CONTROL CABLES

xi) Manufacturer
xii) Type and material
xiii) Rated voltage
xiv) Rated current
xv) Type of insulation
xvi) No. of strands
xvii) No. of cores
xviii) Short circuit current rating
xix) Resistance per 1000 metres
xx) Applicable standards

1.17.00 CONDUITS/ACCESSORIES AND FITTINGS

i) Material
ii) Manufacturer
iii) Applicable standard

1.18.00 CONTACTORS

i) Make
ii) Type
iii) Applicable standards
iv) No. of poles
v) Rated voltage
vi) Rated frequency
vii) Rated current
viii) Closing coil
- Rated voltage
- Current consumption

- Power consumption in KW
- Insulation class for electromagnet

ix) Rated duty
- Rated insulation category
- No. of operations per hour
- Rated breaking capacity
- Rated making capacity
- Short time rating in sec

ix) Limits of operation
- Supply voltage variations (%)
- Supply frequency variations (%)
- Drop out voltage (%)
- Min. pick up voltage (%)

x) Thermal overload relay setting range available

xi) Auxiliary contacts
- Numbers
- Current rating (Make and break)

xi) Rated utilization category as per IS 2459

xii) Max. recommended back up HRC fuse size

1.19.00 FUSES

i) Make

ii) Type

iii) Continuous current

iv) Rated voltage

v) Rated frequency

vi) Rupturing capacity

vii) Mounting details

viii) Fixing and removing arrangement

ix) Visual indication for fuses

x) Applicable standards

1.20.00 INDICATING LAMPS

i) Make

ii) Type

iii) Rated voltage

iv) Rated power consumption in Watt

v) Permissible voltage variation

vi) Series resistance provided

1.21.00 PUSH BUTTONS

i) Make

ii) Type

iii) Rating

- Voltage
- Continuous current

iv) No. of aux. Contacts

- Normally open
- Normally closed

v) Contact rating

vi) Colours

vii) Mounting arrangement

1.22.00 OVER TRAVEL LIMIT SWITCH

i) Make

ii) Type

iii) Material of contacts

iv) Contact rating

v) Numbers furnished

1.23.00 CONTROL TRANSFORMER

i) Make

ii) Type

iii) Output rating (VA)

iv) Ratio

Name of Bidder / Vendor						
Project						
Revision No.	0	1	2	3	4	5
Signature of Bidder / Vendor / Authorised Representative						
Date						

v) Class of insulation

vi) Max. temp rise of winding over
Specified ambient temperature.

vii) One minute power frequency test voltage

viii) Applicable standards

1.24.00 CIRCUIT BREAKER AND ISOLATOR

i) Make

ii) Type

iii) Current rating in amps

iv) Interruption duty

v) Max. breaking capacity

vi) Operating voltage of tripping and closing coils

vii) Max. permissible variation of operating voltage

1.25.00 RACEWAY

i) Raceway as per specification

ii) Material of

- Indoor fittings
- Outdoor fittings
- Raceway support
- Junction boxes

1.26.0 EARTHING

i) Earthing conductor

- Size
- Material

ii) Material of earthing cable

iii) Clamps. Bolts, washers, nuts and another
Hardware of iron steel are galvanized.

1.27.00 MOTOR STARTER

i) Make & Size

ii) Rating]

iii) Mechanically latched type

iv) Single phase prevention feature provided

v) Degree of protection

1.28.00 DETAILS OF CONTROL PANELS

i) No. of panels

ii) Type of enclosures (Degree of protection)

iii) Thickness of sheet metal

iv) Painting

- Colour
- Finish

v) Cable entry

vi) Manufacturer

Name of Bidder / Vendor						
Project						
Revision No.	0	1	2	3	4	5
Signature of Bidder / Vendor / Authorised Representative						
Date						

`

TECHNICAL SPECIFICATION

FOR
ELEVATOR

(ELECTRICAL PORTION)

1.0 **EQUIPMENT & SERVICES TO BE PROVIDED BY BIDDER:**

a) Services and equipment as per "Electrical Scope between BHEL and Vendor".

b) Any item/work either supply of equipment or erection material which have not been specifically mentioned but are necessary to complete the work for trouble free and efficient operation of the plant shall be deemed to be included within the scope of this specification. The same shall be provided by the bidder without any extra charge.

c) Supply of mandatory spares as specified in the specifications of mechanical equipments.

d) Electrical load requirement for . **ELEVATOR.**

e) All equipment shall be suitable for the power supply fault levels and other climatic conditions mentioned in the enclosed project information.

f) Bidder to furnish list of makes for each equipment at contract stage, which shall be subject to customer/BHEL approval without any commercial and delivery implications to BHEL

g) Various drawings, data sheets as per required format, Quality plans, calculations, test reports, test certificates, operation and maintenance manuals etc shall be furnished as specified at contract stage. All documents shall be subject to customer/BHEL approval without any commercial implication to BHEL.

h) Motor shall meet minimum requirement of motor specification.

i) Vendor to clearly indicate equipment locations and local routing lengths in their cable listing furnished to BHEL.

2.0 **EQUIPMENT & SERVICES TO BE PROVIDED BY PURCHASER FOR ELECTRICAL & TERMINAL POINTS:**

Refer "Electrical Scope between BHEL and Vendor".

3.0 DOCUMENTS TO BE SUBMITTED ALONG WITH BID

3.1 The electrical specification without any deviation from the technical/quality assurance requirements stipulated shall be deemed to be complied by the bidder in case bidder furnishes the overall compliance of package technical specification in the form of

compliance certificate/No deviation certificate.

3.2 No technical submittal such as copies of data sheets, drawings, write-up, quality plans, type test certificates, technical literature, etc, is required during tender stage. Any such submission even if made, shall not be considered as part of offer.

4.0 List of enclosures :

a) Electrical scope between BHEL & vendor
b) Specification for Elevator & LT Motors
c) Specification for cable lugs and glands
d) Quality plan for motors
e) Electrical Load data Format
f) BHEL Cable listing Format

STANDARD ELECTRICAL SCOPE BETWEEN BHEL AND VENDOR

PACKAGE: ELEVATORS

SCOPE OF VENDOR: SUPPLY , ERECTION & COMMISSIONING OF VENDOR'S EQUIPMENT

PROJECT : **KAHALGAON (FGD) STPP, Stage-I & II (4x210MW + 3x500MW)**

S. NO	DETAILS	SCOPE SUPPLY	SCOPE E&C	REMARKS
1	Isolating Switch	Vendor	Vendor	BHEL will provide two number 415 V (3ph, 4W) supply feeder only up to isolating switches for elevators. Any other voltage level (AC/DC) required will be derived by the vendor. Motor starter shall be part of elevator control panel.
2	Power cables, control cables, screened control cables and any special cables (if required) between equipment supplied by vendor.	Vend	Vendor	Cable from supply feeder to isolating switch shall be in BHEL scope.
3	Cabling material (cable trays, accessories, cable tray supporting system, conduits etc).	Vendor	Vendor	
4	Equipment Earthing	Vendor	Vendor	All equipment metallic enclosures / frames, metal structure etc. shall be grounded at two points each to the nearest grounding points / risers provided by BHEL.
5	Motors	Vendor	Vendor	
6	Cable glands and lugs for equipment supplied by vendor	Vendor	Vendor	1. Double compression Ni-Cr plated brass cable glands 2. Solder less crimping type heavy duty tinned copper lugs for power & control cables.
7	a) Input cable schedules (C & I) b) Cable interconnection details for above c) Cable block diagram	Vendor Vendor Vendor	- - -	Cable listing for Control and Instrumentation Cable in enclosed excel format shall be submitted by vendor during detailed engineering stage.
8	Equipment layout drawings	Vendor	-	
9	Electrical Equipment GA drawing	Vendor	-	For necessary interface review.

Make of all electrical equipment/ items supplied shall be reputed make & shall be subject to approval of BHEL/customer after award of contract.

ELEVATOR ELECTRICAL

KAHALGAON (FGD) STPP, Stage-I & II (4x210MW + 3x500MW)

	TECHNICAL REQUIREMENTS
	ELEVATORS (ELECTRICALS)
1.00.00	**CODES AND STANDARDS**
1.01.00	All standards, specifications and codes of practice referred to herein shall be the latest editions including all applicable official amendments and revisions. In case of conflict between this specification and those (IS codes, standards, etc.) referred to herein, the former shall prevail. All work shall be carried out as per the standards/ codes as applicable.
2.00.00	**Electric motor:**
	The driving motors shall conform to IEC 60034 and suitable for the Variable Voltage Variable Frequency (VVVF) application. All motors shall be squirrel cage induction type, suitable for operation at 415V (+/- 10% variation) , 3 phase, 3 wire, 50HZ (+3% to -5% variation) supply. Motors shall be provided with **thermal class 130(B) or better insulation**
3.00.00	**CAR ELECTRICAL ACCESSORIES**
	The following accessories shall be provided :
	i) LED light fittings for illumination level of 100 lux on car floor.
	ii) Portable light and alarm bell with battery and charger ventilation fan with control.
	iii) Car control station with position indicator inside the car and at landing platforms (both visual and audio).
	iv) Emergency stop switch.
	v) 5/15A, 3 pin plug socket with switch on top of lift car.
	vi) Hand free speaker telephone set connected to plant network.
	vii) AUTOMATIC RESCUE DEVICE (ARD)-(BATTERY DRIVE) : Contractor to provide a modern Advanced electronic drive system of “RESCUING Passenger Trapped in a ELEVATOR”.
	viii) EMERGENCY SAFETY DEVICES : The lift shall be provided with safety Device attached to the lift car frame and placed beneath the car. The safety device shall be capable of stopping and sustaining the lift car up at governor tripping speed with full rated load in car.
4.00.00	**OPERATIONAL REQUIRMENTS:**
	a. Contractor shall provide car operating panel with luminous buttons, car position indication in car (both visual and audio) combined with direction arrows, overload warning indicator, battery operated alarm bell and emergency light and fan & hands free speaker telephone set with suitable battery, charger & controls.
	b. Contractor shall provide emergency indicator to indicate the location of elevator in case of elevator being stuck up between the floors through automatic flashers (both audio & visual).

CLAUSE NO.	TECHNICAL REQUIREMENTS
	c. Contractor shall provide electronic door detector (Infra red curtain type). d. Digital hall position indicator at all floors, tell lights at all floors shall also be provided by the Contractor. e. For facilitating the movement of visually & hearing impaired persons, hall lantern and car arrival chimes shall be provided f. All fixtures shall be in stainless steel face plates. g. Push buttons shall be fixed in the car for holding the doors open for any length of the time required. h. All other safety/protection/operation interlocks as required by IS:14665 (latest edition).
4.00.00	**POWER SUPPLY** Each elevator shall be provided with a separate three phase, three wire 415V feeder of adequate rating
5.00.00	**Controls:** The controls shall be Variable Voltage and Variable frequency type and shall provide smooth and constant acceleration and retardation under all conditions of operation . Suitable control panel shall be provided in the machine room.
6.00.00	**Cables and wiring:** All the cables except trailing cables shall be as per IS:1554-1 or IS-7098-I. the PVC outer sheath of these cables shall be flame retardant, low smoke (FRLS) type with the following FRLS properties. a) Oxygen index of min. 29 (as per IS:10810 Part-58) b) Acid gas emission of max. 20% (as per IEC-754-I). c) Smoke density rating shall not be more than 60% (as per ASTMD-2843). The circular trailing cables shall be either in accordance with IS 4289 Part-I (Elastomer insulated) or IS-4289 Part-II (PVC insulated). The flat type trailing cables if offered shall be in accordance with IEC-60227-6. All wiring / cabling between the equipments in the lift machine room and that between the machine room and equipments in the lift well and at the landings shall be wired in HDP conduits/ galvanized steel conduits to be supplied by the contractor. Alternatively armored cables may be used.
7.00.00	**Earthing:** The elevator structures and all Electrical equipment, including metal conduits shall be effectively earthed with the earth conductors provided in the machine room as per IS: 3043.

MOTORS

	TECHNICAL REQUIREMENTS

MOTORS

1.00.00 GENERAL REQUIREMENTS

1.01.00 For the purpose of design of equipment/systems, an ambient temperature of 50 deg. Centigrade and relative humidity of 95% (at 40 deg C) shall be considered. The equipment shall operate in a highly polluted environment.

1.02.00 All equipment's shall be suitable for rated frequency of 50 Hz with a variation of +3% & -5%, and 10% combined variation of voltage and frequency unless specifically brought out in the specification.

1.03.00 Contactor shall provide fully compatible electrical system, equipment's, accessories and services.

1.04.00 All the equipment, material and systems shall, in general, conform to the latest edition of relevant National and international Codes & Standards, especially the Indian Statutory Regulations.

1.05.00 Paint shade shall be as per RAL 5012 (Blue) for indoor and outdoor equipment.

1.06.00 The responsibility of coordination with electrical agencies and obtaining all necessary clearances for Contactors equipment and systems shall be under the Contactor scope.

1.07.00 Degree of Protection

Degree of protection for various enclosures as per IEC60034-05 shall be as follows :-

i)	Indoor motors	-	IP 54
ii)	Outdoor motors	-	IP 55
iii)	Cable box-indoor area	-	IP 54
iv)	Cable box-Outdoor area	-	IP 55

2.00.00 CODES AND STANDARDS

1)	Three phase induction motors	:	IS/IEC:60034
2)	Single phase AC motors	:	IS/ IEC:60034
3)	Crane duty motors	:	IS:3177, IS/IEC:60034
4)	DC motors/generators	:	IS:4722, IS/IEC:60034
5)	Energy Efficient motors	:	IS 12615, IEC:60034-30

	TECHNICAL REQUIREMENTS
3.00.00	**TYPE**
3.01.00	**AC Motors:** a) Squirrel cage induction motor suitable for direct-on-line starting. b) Continuous duty LT motors upto 200 KW Output rating (at 50 deg.C ambient temperature), shall be **Premium Efficiency class-IE3**, conforming to IS 12615, or IEC:60034-30. HT motors shall have minimum design efficiency of 95 %. However, tolerance on this efficiency value shall be applicable as per IEC 60034 c) Crane duty motors shall be slip ring/ squirrel cage Induction motor as per the requirement. d) Motor operating through variable frequency drives shall be suitable for inverter duty with VPI insulation. Also these motors shall comply the requirements stipulated in IEC: 60034-18-41 and IEC: 60034-18-42 as applicable. e) Motors operating through variable frequency drives shall also meet the requirements mentioned in subsection for VFD.
3.02.00	DC Motors Shunt wound.
4.00.00	**RATING** (a) Continuously rated (S1). However, crane motors shall be rated for S4 duty, 40% cyclic duration factor. (b) Whenever the basis for motor or driven equipment ratings are not specified in the corresponding mechanical specification sub-sections, maximum continuous motor ratings shall be at least 10% above the maximum load demand of the driven equipment under entire operating range including voltage and frequency variations.
5.00.00	**TEMPERATURE RISE** **Air cooled motors** 70 deg. C by resistance method for both thermal class 130(B) & 155(F) insulation. **Water cooled** 80 deg. C over inlet cooling water temperature mentioned elsewhere, by resistance method for both thermal class 130(B) & 155(F) insulation.
6.00.00	**OPERATIONAL REQUIREMENTS**
6.01.00	**Starting Time**

	TECHNICAL REQUIREMENTS
6.01.01	For motors with starting time upto 20 secs. at minimum permissible voltage during starting, the locked rotor withstand time under hot condition at highest voltage limit shall be at least 2.5 secs. more than starting time.
6.01.02	For motors with starting time more than 20 secs. and upto 45 secs. at minimum permissible voltage during starting, the locked rotor withstand time under hot condition at highest voltage limit shall be at least 5 secs. more than starting time.
6.01.03	For motors with starting time more than 45 secs. at minimum permissible voltage during starting, the locked rotor withstand time under hot condition at highest voltage limit shall be more than starting time by at least 10% of the starting time.
6.01.04	Speed switches mounted on the motor shaft shall be provided in cases where above requirements are not met.
6.02.00	**Torque Requirements**
6.02.01	Accelerating torque at any speed with the lowest permissible starting voltage shall be at least 10% motor rated torque.
6.02.02	Pull out torque at rated voltage shall not be less than 205% of rated torque. It shall be 275% for crane duty motors.
6.03.00	**Starting voltage requirement**
	(a) Up to 85% of rated voltage for ratings below 110 KW
	(b) Up to 80% of rated voltage for ratings from 110 KW to 200 KW
	(c) Up to 85% of rated voltage for ratings from 201 KW to 1000 KW
	(d) Up to 80% of rated voltage for ratings from 1001 KW to 4000 KW
	(e) Up to 75 % of rated voltage for ratings above 4000KW
7.00.00	**DESIGN AND CONSTRUCTIONAL FEATURES**
7.01.00	Suitable single phase space heaters shall be provided on motors rated 30KW and above to maintain windings in dry condition when motor is standstill. Separate terminal box for space heaters & RTDs shall be provided. However for flame proof motors, space heater terminals inside the main terminal box may be acceptable.
7.02.00	All motors shall be either Totally enclosed fan cooled (TEFC) or totally enclosed tube ventilated (TETV) or Closed air circuit air cooled (CACA) type. However, motors rated 3000KW or above can be Closed air circuit water cooled (CACW). The method of movement of primary and secondary coolant shall be self-circulated by fan or pump directly mounted on the rotor of the main motor as per IEC 60034-6. However VFD driven motors can be offered with forced cooling type with machine mounted fan or pump driven by separate electric motor. Motors and EPB located in hazardous areas shall have flame proof enclosures conforming to IS:2148 as detailed below

	TECHNICAL REQUIREMENTS
	(a) Fuel oil area : Group – IIB (b) Hydrogen generation : Group - IIC or (Group-I, Div-II as per plant area NEC) or (Class-1, Group-B, Div-II as per NEMA /IEC60034)
7.03.00	Winding and Insulation (a) Type : Non-hygroscopic, oil resistant, flame resistant (b) Starting duty : Two hot starts in succession, with motor initially at normal running temperature. (c) 11kV, 6.6 KV & 3.3 kV AC motors : Thermal class 155 (F) insulation. The winding insulation process shall be total Vacuum Presure Impregnated i.e resin poor method. The lightning Impulse & interturn insulation surge withstand level shall be as per IEC-60034 part-15. (d) 240VAC, 415V AC & 220V DC motors : Thermal Class (B) or better
7.04.00	Motors rated above 1000KW shall have insulated bearings/housing to prevent flow of shaft currents.
7.05.00	Motors with heat exchangers shall have dial type thermometer with adjustable alarm contacts to indicate inlet and outlet primary air temperature.
7.06.00	Noise level for all the motors shall be limited to 85 dB(A) except for BFP motor for which the maximum limit shall be 90dB(A). Vibration shall be limited within the limits prescribed in IS:12075 / IEC 60034-14 . Motors shall withstand vibrations produced by driven equipment. HT motor bearing housings shall have flat surfaces, in both X and Y directions, suitable for mounting 80mmX80mm vibration pads.
7.07.00	In HT motors, at least four numbers simplex / two numbers duplex platinum resistance type temperature detectors shall be provided in each phase stator winding. Each bearing of HT motor shall be provided with dial type thermometer and minimum 2 numbers duplex platinum resistance type temperature detectors.
7.08.00	Motor body shall have two earthing points on opposite sides.
7.09.00	11 KV motors shall be offered with Separable Insulated Connector (SIC) as per IEEE 386. The offered SIC terminations shall be provided with protective cover and trifurcating sleeves. SIC termination kit shall be suitable for fault level of 25 KA for 0.17 seconds.
7.10.00	3.3/6.6 KV motors shall be offered with dust tight phase separated double walled (metallic as well as insulated barrier) Terminal box. Contractor shall provide termination kit for the offered Terminal box. The offered Terminal Box shall be

	TECHNICAL REQUIREMENTS
	suitable for fault level of 250 MVA for 0.12 sec. Removable gland plates of thickness 3 mm (hot/cold rolled sheet steel) or 4 mm (non magnetic material for single core cables) shall be provided.
7.11.00	The spacing between gland plate & centre of bottom terminal stud shall be as per Table-I.
7.12.00	All motors shall be so designed that maximum inrush currents and locked rotor and pullout torque developed by them at extreme voltage and frequency variations do not endanger the motor and driven equipment.
7.13.00	The motors shall be suitable for bus transfer schemes provided on the 11kV, 6.6 KV, 3.3 kV /415V systems without any injurious effect on its life.
7.14.00	For motors rated 2000 KW & above, neutral current transformers of PS class shall be provided on each phase in a separate neutral terminal box.
7.15.00	The size and number of cables (for HT motors) to be intimated to the successful Contactor during detailed engineering and the Contactor shall provide terminal box suitable for the same.
8.00.00	The ratio of locked rotor KVA at rated voltage to rated KW shall not exceed the following (without any further tolerance): (a) From 50KW & upto 110KW : 11.0 (b) From 110 KW & upto 200 KW : 9.0 (c) Above 200 KW & upto 1000KW : 10.0 (d) From 1001KW & upto 4000KW : 9.0 (e) Above 4000KW : 6 to 6.5
10.00.00	**TYPE TEST**
10.01.00	**HT MOTORS**
10.01.01	The Contactor shall carry out the type tests as listed in this specification on the equipment to be supplied under this contract. The Contactor shall indicate the charges for each of these type tests separately in the relevant schedule of Section - VII- (BPS) and the same shall be considered for the evaluation of the bids. The type tests charges shall be paid only for the test(s) actually conducted successfully under this contract and upon certification by the Employer's engineer.
10.01.02	The type tests shall be carried out in presence of the Employer's representative, for which minimum 15 days notice shall be given by the Contactor. The Contactor shall obtain the Employer's approval for the type test procedure before conducting the type test. The type test procedure shall clearly specify the test set–up, instruments to be used, procedure, acceptance norms, recording of different

	TECHNICAL REQUIREMENTS
	parameters, interval of recording, precautions to be taken etc. for the type test(s) to be carried out.
10.01.03	In case the Contactor has conducted such specified type test(s) within last ten years as on the date of bid opening, he may submit during detailed engineering the type test reports to the Employer for waival of conductance of such test(s). These reports should be for the tests conducted on the equipment similar to those proposed to be supplied under this contract and test(s) should have been either conducted at an independent laboratory or should have been witnessed by a client. The Employer reserves the right to waive conducting of any or all the specified type test(s) under this contract. In case type tests are waived, the type test charges shall not be payable to the Contactor.
10.01.04	Further the Contactor shall only submit the reports of the type tests as listed in "LIST OF TESTS FOR WHICH REPORTS HAVE TO BE SUBMITTED" and carried out within last ten years from the date of bid opening. These reports should be for the test conducted on the equipment similar to those proposed to be supplied under this contract and the test(s) should have been either conducted at an independent laboratory or should have been witnessed by a client. However if the Contactor is not able to submit report of the type test(s) conducted within last ten years from the date of bid opening, or in the case of type test report(s) are not found to be meeting the specification requirements, the Contactor shall conduct all such tests under this contract at no additional cost to the Employer either at third party lab or in presence of client/Employers representative and submit the reports for approval.
10.01.05	**LIST OF TYPE TESTS TO BE CONDUCTED** **The following type tests shall be conducted on each type and rating of HT motor** (a) No load saturation and loss curves upto approximately 115% of rated voltage (b) Measurement of noise at no load. (c) Momentary excess torque test (subject to test bed constraint). (d) Full load test(subject to test bed constraint) (e) Temperature rise test at rated conditions. During heat run test, bearing temp., winding temp.,coolant flow and its temp. shall also be measured. In case the temperature rise test is carried at load other than rated load, specific approval for the test method and procedure is required to be obtained. Wherever ETD's are provided, the temperature shall be measured by ETD's also for the record purpose.

	TECHNICAL REQUIREMENTS
10.01.06	**LIST OF TESTS FOR WHICH REPORTS HAVE TO BE SUBMITTED** The following type test reports shall be submitted for each type and rating of HT motor (a) Degree of protection test for the enclosure followed by IR, HV and no load run test. (b) Terminal box-fault level withstand test for each type of terminal box of HT motors only. (c) Lightning Impulse withstand test on the sample coil shall be as per clause no. 4.3 IEC-60034, part-15 (d) Surge-withstand test on inter-turn insulation shall be as per clause no. 4.2 of IEC 60034, part-15
10.02.00	**LT Motors**
10.02.01	LT Motors supplied shall be of type tested design. During detailed engineering, the Contactor shall submit for Employer's approval the reports of all the type tests as listed in this specification and carried out within last *ten* years from the date of bid opening. These reports should be for the test conducted on the equipment similar to those proposed to be supplied under this contract and the test(s) should have been either conducted at an independent laboratory or should have been witnessed by a client.
10.02.02	However if the Contactor is not able to submit report of the type test(s) conducted within last ten years from the date of bid opening, or in the case of type test report(s) are not found to be meeting the specification requirements, the Contactor shall conduct all such tests under this contract at no additional cost to the Employer either at third party lab or in presence of client/Employers representative and submit the reports for approval.
10.02.03	**LIST OF TESTS FOR WHICH REPORTS HAVE TO BE SUBMITTED** **The following type test reports shall be submitted for each type and rating of LT motor of above 100 KW only** 1. Measurement of resistance of windings of stator and wound rotor. 2. No load test at rated voltage to determine input current power and speed 3. Open circuit voltage ratio of wound rotor motors (in case of Slip ring motors) 4. Full load test to determine efficiency power factor and slip 5. Temperature rise test

	TECHNICAL REQUIREMENTS
	6. Momentary excess torque test. 7. High voltage test 8. Test for vibration severity of motor. 9. Test for noise levels of motor(Shall be limited as per clause no 7.06.00 of this section) 10. Test for degree of protection and 11. Overspeed test. 12. Type test reports for motors located in fuel oil area having flame proof enclosures as per IS 2148 / IEC 60079-1
10.03.00	All acceptance and routine tests as per the specification and relevant standards shall be carried out. Charges for these shall be deemed to be included in the equipment price.
10.04.00	The type test reports once approved for any projects shall be treated as reference. For subsequent projects of NTPC, an endorsement sheet will be furnished by the manufacturer confirming similarity and “No design Change”. Minor changes if any shall be highlighted on the endorsement sheet.

TECHNICAL REQUIREMENTS

TABLE - I

DIMENSIONS OF TERMINAL BOXES FOR LV MOTORS

Motor MCR in KW	Minimum distance between centre of bottom terminal stud and gland plate in mm
UP to 3 KW	**As per manufacturer's practice.**
Above 3 KW - upto 7 KW	85
Above 7 KW - upto 13 KW	115
Above 13 KW - upto 24 KW	167
Above 24 KW - upto 37 KW	196
Above 37 KW - upto 55 KW	249
Above 55 KW - upto 90 KW	277
Above 90 KW - upto 125 KW	331
Above 125 KW-upto 200 KW	385/203 (For Single core cables only)

For HT motors the distance between gland plate and the terminal studs shall not be less than 500 mm.

PHASE TO PHASE/ PHASE TO EARTH AIR CLEARANCE:

NOTE: Minimum inter-phase and phase-earth air clearances for LT motors with lugs installed shall be as follows:

Motor MCR in KW	Clearance
UP to 110 KW	10mm
Above 110 KW and upto 150 KW	12.5mm
Above 150 KW	19mm

Cable glands

Cable shall be terminated using double compression type cable glands. Testing requirements of Cable glands shall conform to BS:6121 and gland shall be of robust construction capable of clamping cable and cable armour (for armoured cables) firmly without injury to insulation. Cable glands shall be made of heavy duty brass machine finished and nickel chrome plated. Thickness of plating shall not be less than 10 micron. All washers and hardware shall also be made of brass with nickel chrome plating Rubber components shall be of neoprene or better synthetic material and of tested quality. Cable glands shall be suitable for the sizes of cable supplied/erected.

Cable lugs/ferrules

Cable lugs/ferrules for power cables shall be tinned copper solderless crimping type suitable for aluminium compacted conductor cables. Cable lugs and ferrules for control cables shall be tinned copper type. The cable lugs for control cables shall be provided with insulating sleeve and shall suit the type of terminals provided on the equipments. Cable lugs and ferrule shall conform to DIN standards

	MANUFACTURER/ BIDDER/ SUPPLIER NAME & ADDRESS	STANDARD QUALITY PLAN		SPEC. NO :	DATE:
		CUSTOMER :		QP NO.: PE-QP-999-Q-006, REV-02	DATE: 17.04.2020
		PROJECT:		PO NO.:	DATE:
		ITEM: AC ELECT. MOTORS UPTO 55KW (LV (415V))	SYSTEM:	SECTION: II	SHEET 1 of 2

S. NO.	COMPONENT & OPERATIONS	CHARACTERISTICS	CLASS	TYPE OF CHECK	QUANTUM OF CHECK		REFERENCE DOCUMENT	ACCEPTANCE NORMS	FORMAT OF RECORD		AGENCY			REMARKS
1	2	3	4	5	6		7	8	9	*	**			
					M	C/ N				D	M	C	N	
1.0	ASSEMBLY	1.WORKMANSHIP	MA	VISUAL	100%	-	MFG. SPEC.	MFG. SPEC.	LOG BOOK		P	-	-	
		2.DIMENSIONS	MA	VISUAL	100%	-	MFG. DRG./ MFG. SPEC.	MFG. DRG./ MFG. SPEC.	LOG BOOK		P	-	-	
		3.CORRECTNESS COMPLETENESS TERMINATIONS/ MARKING/ COLOUR CODE	MA	VISUAL	100%	-	MFG.SPEC./	MFG.SPEC.	LOG BOOK		P	-	-	
2.0	PAINTING	1.SHADE	MA	VISUAL	SAMPLE	-	MFG. SPEC/ APPROVED DATASHEET	MFG. SPEC/ APPROVED DATASHEET	LOG BOOK	✓	P	V	-	
3.0	TESTS	1.ROUTINE TEST INCLUDING SPECIAL TEST	MA	VISUAL	100%	-	IS-325 / IS-12615/ APPROVED DATA SHEET	IS-325 / IS-12615/ APPROVED DATA SHEET	TEST/ INSPN. REPORT	✓	P	V *	-	* NOTE -1
		2.OVERALL DIMENSIONS & ORIENTATION	MA	MEASUREMENT & VISUAL	100%	-	APPROVED DRG/ DATA SHEET	APPROVED DRG/ DATA SHEET	TEST/ INSPN. REPORT	✓	P	V *	-	* NOTE -1 & NOTE-2

BHEL					
ENGINEERING			QUALITY		
	Sign & Date	Name		Sign & Date	Name
Prepared by:		HEMA KHUSHWAHA	Checked by:		KUNAL GANDHI
Reviewed by:		PRAVEEN DUTTA	Reviewed by:		RITESH KUMAR JAISWAL

BIDDER/ SUPPLIER	
Sign & Date	
Seal	

FOR CUSTOMER REVIEW & APPROVAL			
Doc No:			
	Sign & Date	Name	Seal
Reviewed by:			
Approved by:			

TENDER NO.: PSER:SCT:KGN-C21:01:21

		3.NAMEPLATE DETAILS	MA	VISUAL	100%	-	IS-325 / IS-12615 / APPROVED DATA SHEET	SAME AS COL. 7	TEST/ INSPN. REPORT	✓	P	V	-	
4.0	PACKING	SURFACE FINISH & COMPLETENESS	MA	VISUAL	100%	100%	AS PER MFG. STANDARD / (#)	AS PER MFG. STANDARD / (#).	INSPC. REPORT	✓	P	W	-	(#) REFER NOTE-8

NOTES:
1. Routine tests on 100% motors shall be done by the vendor. However, BHEL/ Customer shall witness routine tests on random samples. The sampling plan shall be mutually agreed upon.
2. For exhaust/ventilation fan motors of rating up to 1.5 KW, only routine test certificates shall be furnished for scrutiny.
3. In case test certificates for these tests on similar type, size and design of motor from independent laboratory are available, the same is valid for 5 years.
4. BHEL reserves the right to perform repeat test, if required.
5. After packing and prior to issue MDCC, photographs of items to be despatched shall be sent to BHEL for review.
6. In case of any changes in QP commented by customer at contract stage, same shall be carried out by bidder without any implication to BHEL/ Customer.
7. Project specific QP to be developed based on customer requirement.
8. For export job, BHEL technical specification for seaworthy packing to be followed.
9. Packing shall be suitable for storage at site in tropical climate conditions.
10. Latest revision/ year of issue of all the standards (IS/ ASME/ IEC etc.) indicated in QP shall be referred.

LEGENDS:
*RECORDS, INDENTIFIED WITH "TICK"(√) SHALL BE ESSENTIALLY INCLUDED BY SUPPLIER IN QA DOCUMENTATION,
** **M**: SUPPLIER/ MANUFACTURER/ SUB-SUPPLIER, B: MAIN SUPPLIER/ BHEL/ THIRD PARTY INSPECTION AGENCY, **C**: CUSTOMER,
P: PERFORM, **W**: WITNESS, **V:** VERIFICATION, AS APPROPRIATE
MA: MAJOR, **MI**: MINOR**, CR:** CRITICAL
D: DOCUMENTATION

TENDER NO.: PSER:SCT:KGN-C2101:21

BHEL					
ENGINEERING			QUALITY		
	Sign & Date	Name		Sign & Date	Name
Prepared by:		HEMA KHUSHWAHA	Checked by:		KUNAL GANDHI
Reviewed by:		PRAVEEN DUTTA	Reviewed by:		RITESH KUMAR JAISWAL

BIDDER/ SUPPLIER	
Sign & Date	
Seal	

FOR CUSTOMER REVIEW & APPROVAL			
Doc No:			
	Sign & Date	Name	Seal
Reviewed by:			
Approved by:			

बीएचईएल BHEL	MANUFACTURER/ BIDDER/ SUPPLIER NAME & ADDRESS	STANDARD QUALITY PLAN		SPEC. NO :	DATE:17.04.2020
		CUSTOMER :		QP NO.: PE-QP-999-Q-007, REV-04	
		PROJECT:		PO NO.:	
		ITEM: AC ELECT. MOTORS 55 KW & ABOVE (LV (415V))	SYSTEM:	SECTION: II	SHEET 1 OF 9

Sl No.	Component & Operations	Characteristics	Class	Type of Check	Quantum Of check		Reference Document	Acceptance NORMS	FORMAT OF RECORD		AGENCY			
1	2	3	4	5	6		7	8	9	*	**			
					M	C/N				D	M	C	N	
1.0	RAW MATERIAL & BOUGHT OUT CONTROL													
1.1	SHEET STEEL, PLATES, SECTION, EYEBOLTS	1.SURFACE CONDITION	MA	VISUAL	100%	-	-	FREE FROM BLINKS, CRACKS, WAVINESS ETC	LOG BOOK		P	-	-	
		2.DIMENSIONS	MA	MEASUREMENT	SAMPLE	-	MANUFACTURER'S DRG./SPEC	MANUFACTURER'S DRG./SPEC	LOG BOOK		P	-	-	
		3.PROOF LOAD TEST (EYE BOLT)	MA	MECH. TEST	SAMPLE	-	MANUFACTURER'S DRG./SPEC	MANUFACTURER'S DRG./SPEC	TEST REPORT		P/V	-		
1.2	HARDWARES	1.SURFACE CONDITION	MA	VISUAL	100%	-		FREE FROM CRACKS, UN-EVENNESS ETC.	TEST REPORT		P	-	-	
		2.PROPERTY CLASS	MA	VISUAL	SAMPLES	-	MANUFACTURER'S DRG./SPEC	MANUFACTURER'S DRG./SPEC	TC		P/V	-	-	PROPERTY CLASS MARKING SHALL BE CHECKED BY THE VENDOR
1.3	CASTING	1.SURFACE CONDITION	MA	VISUAL	100%	-	MANUFACTURER'S DRG./SPEC	FREE FROM CRACKS, BLOW HOLES ETC.	LOG BOOK		P/V	-		
		2.CHEM. & PHY. PROP.	MA	CHEM & MECH TEST	1/HEAT NO.	-	MANUFACTURER'S DRG./SPEC	MANUFACTURER'S DRG./SPEC	TC		P/V	-		HEAT NO. SHALL BE VERIFIED
		3.DIMENSIONS	MA	MEASUREMENT	100%	-	MANUFACTURER'S DRG.	MANUFACTURER'S DRG.	LOG BOOK		P/V	-		
1.4	PAINT & VARNISH	1.MAKE, SHADE, SHELF LIFE & TYPE	MA	VISUAL	100% CONTINUOUS	-	MANUFACTURER'S DRG./SPEC	MANUFACTURER'S DRG./SPEC	LOG BOOK		P/V	-		

BHEL					
ENGINEERING			QUALITY		
	Sign & Date	Name		Sign & Date	Name
Prepared by:		HEMA KHUSHWAHA	Checked by:		KUNAL GANDHI
Reviewed by:		PRAVEEN DUTTA	Reviewed by:		R K JAISWAL

BIDDER/ SUPPLIER	
Sign & Date	
Seal	

FOR CUSTOMER REVIEW & APPROVAL			
Doc No:			
	Sign & Date	Name	Seal
Reviewed by:			
Approved by:			

TENDER NO.: PSER:SCT:KGN-C2101:21

बीएचईएल BHEL	MANUFACTURER/ BIDDER/ SUPPLIER NAME & ADDRESS	STANDARD QUALITY PLAN	SPEC. NO :	DATE:17.04.2020
		CUSTOMER :	QP NO.: PE-QP-999-Q-007, REV-04	
		PROJECT:	PO NO.:	
		ITEM: AC ELECT. MOTORS 55 KW & ABOVE (LV (415V)) / SYSTEM:	SECTION: II	SHEET 2 OF 9

Sl No.	Component & Operations	Characteristics	Class	Type of Check	Quantum Of check		Reference Document	Acceptance NORMS	FORMAT OF RECORD		AGENCY			
1	2	3	4	5	6		7	8	9	*	**			
					M	C/N				D	M	C	N	
1.5	SHAFT (FORGED OR ROLLED)	1. SURFACE COND.	MA	VISUAL	100%	-	-	FREE FROM VISUAL DEFECTS	LOG BOOK		P	-	-	VENDOR'S APPROVAL IDENTIFICATION SHALL BE MAINTAINED
		2. CHEM. & PHYSICAL PROPERTIES	MA	CHEM. & PHYSICAL TESTS	1/HEAT NO. OR HEAT TREATMENT BATCH NO	-	MANUFACTURER'S DRG./ SPEC.	MANUFACTURER'S DRG./ STD.	TC		P/V	-		
		3. DIMENSIONS	MA	MEASUREMENT	100%	-	MANUFACTURER'S DRG./ SPEC.	MANUFACTURER'S DRG.	LOG BOOK		P/V	-		
		4.INTERNAL FLAWS	CR	ULTRASONIC TEST	100%	-	ASTM-A388	MANUFACTURER'S STD.	INSPECTION REPORT	✔	P/W	V	-	FOR DIA OF 55 MM & ABOVE
1.6	SPACE HEATERS, CONNEC-TORS, TERMINAL BLOCKS, CABLES, CABLE LUGS, CARBON BRUSH TEMP. DETECTORS, RTD, BTD'S	1. MAKE & RATING	MA	VISUAL	100%	-	MANUFACTURER'S DRG./STD.	MANUFACTURER'S DRG./STD.	INSPECTION REPORT		P/V	-	-	
		2. PHYSICAL COND.	MA	VISUAL	100%	-	MANUFACTURER'S DRG./STD.	NO PHYS. DAMAGE, NO ELECTRICAL DISCONTINUITY	INSPECTION REPORT		P/V	-	-	
		3.DIMENSIONS (WHEREVER APPLICABLE)	MA	MEASUREMENT	SAMPLE	-	MANUFACTURER'S DRG./ STD	MANUFACTURER'S DRG. / STD.	INSPECTION REPORT		P/V	-	-	
		4.PERFORMANCE/ CALIBRATION	MA	TEST	100%	-	MANUFACTURER'S DRG./ STD	MANUFACTURER'S DRG. / STD.	TEST REPORT		P/V	-	-	

BHEL					
ENGINEERING			QUALITY		
	Sign & Date	Name		Sign & Date	Name
Prepared by:		HEMA KHUSHWAHA	Checked by:		KUNAL GANDHI
Reviewed by:		PRAVEEN DUTTA	Reviewed by:		R K JAISWAL

BIDDER/ SUPPLIER	
Sign & Date	
Seal	

FOR CUSTOMER REVIEW & APPROVAL			
Doc No:			
	Sign & Date	Name	Seal
Reviewed by:			
Approved by:			

TENDER NO.: PSER:SCT:KGN-C2101:21

बी एच ई एल BHEL	MANUFACTURER/ BIDDER/ SUPPLIER NAME & ADDRESS	STANDARD QUALITY PLAN		SPEC. NO :	DATE:17.04.2020
		CUSTOMER :		QP NO.: PE-QP-999-Q-007, REV-04	
		PROJECT:		PO NO.:	
		ITEM: AC ELECT. MOTORS 55 KW & ABOVE (LV (415V))	SYSTEM:	SECTION: II	SHEET 3 OF 9

Sl No.	Component & Operations	Characteristics	Class	Type of Check	Quantum Of check		Reference Document	Acceptance NORMS	FORMAT OF RECORD		AGENCY			
1	2	3	4	5	6		7	8	9	*	**			
					M	C/N				D	M	C	N	
1.7	OTHER INSULATING MATERIALS LIKE SLEEVES, BINDINGS CORDS, PAPERS, PRESS BOARDS ETC.	1. SURFACE COND. ETC.	MA	VISUAL	100%	-	-	NO VISUAL DEFECTS	TEST REPORT		P/V	-	-	
		2.DIMENSION(BORE DIA, WALL THICKNESS, BDV AS RECEIVED, BDV AFTER FOLDING AT 180°	MA	TEST	SAMPLE	-	MANUFACTURER'S STD.	MANUFACTURER'S STD.	LOG BOOK AND OR SUPPLIER'S TC		P/V	-	-	
1.8	SHEET STAMPING (PUNCHED)	1. SURFACE COND.	MA	VISUAL	100%	-	-	NO VISUAL DEFECTS (FREE FROM BURS)	LOG BOOK		P	-	-	
		2.DIMENSIONS INCLUDING BURS HEIGHT	MA	MEASUREMENT	SAMPLE	-	MANUFACTURER'S DRG. .	MANUFACTURER'S DRG.	LOG BOOK		P/V	-	-	
		3. ACCEPTANCE TESTS	MA	ELECT. & MECH TESTS	SAMPLE	-	MANUFACTURER'S DRG./ STD.	MANUFACTURER'S DRG./ STD.	TC		P/V	-	-	
1.9	CONDUCTORS	1. SURFACE FINISH	MA	VISUAL	100%	-	-	FREE FROM VISUAL DEFECTS	LOG BOOK		*P/V	-	-	* MOTOR MANUFACTURER TO CONDUCT VISUAL CHECK FOR SURFACE FINISH ON RANDOM BASIS (10% SAMPLE) AT HIS WORKS AND MAINTAIN RECORD FOR VERIFICATION BY
		2.ELECT. PROP, & MECH. PROP	MA	ELECT. & MECH.TEST	SAMPLES	-	MANUFACTURER'S DRG./ SPEC.	MANUFACTURER'S / SPEC.	TC & VENDOR'S TEST REPORTS		P/V	-	-	

BHEL					
ENGINEERING			QUALITY		
	Sign & Date	Name		Sign & Date	Name
Prepared by:		HEMA KHUSHWAHA	Checked by:		KUNAL GANDHI
Reviewed by:		PRAVEEN DUTTA	Reviewed by:		R K JAISWAL

BIDDER/ SUPPLIER	
Sign & Date	
Seal	

FOR CUSTOMER REVIEW & APPROVAL			
Doc No:			
	Sign & Date	Name	Seal
Reviewed by:			
Approved by:			

TENDER NO.: PSER:SCT:KGN-C2101:21

बी एच ई एल BHEL	MANUFACTURER/ BIDDER/ SUPPLIER NAME & ADDRESS	STANDARD QUALITY PLAN	SPEC. NO :	DATE:17.04.2020
		CUSTOMER :	QP NO.: PE-QP-999-Q-007, REV-04	
		PROJECT:	PO NO.:	
		ITEM: AC ELECT. MOTORS 55 KW & ABOVE (LV (415V)) / SYSTEM:	SECTION: II	SHEET 4 OF 9

Sl No.	Component & Operations	Characteristics	Class	Type of Check	Quantum Of check		Reference Document	Acceptance NORMS	FORMAT OF RECORD		AGENCY			
1	2	3	4	5	6		7	8	9	*	**			
					M	C/N				D	M	C	N	
		3.DIMENSIONS	MA	MEASUREMENT	SAMPLES	-	MANUFACTURER'S DRG./ SPEC.	MANUFACTURER'S / SPEC.	LOG BOOK LOG BOOK		P/V	-	-	
1.10	BEARINGS	1.MAKE & TYPE	MA	VISUAL	100%	-	MANUFACTURER'S DRG./ APPROVED DATASHEET	MANUFACTURER'S DRG./ APPROVED DATASHEET			P/V	-	-	
		2.DIMENSIONS	MA	MEASUREMENT	SAMPLE	-	APPROVED DATASHEET	APPROVED DATASHEET/ BEARING MANUF'S CATALOGUES	LOG BOOK		P/V	-	-	
		3.SURFACE FINISH	MA	VISUAL	100%	-	-	FREE FROM VISUAL DEFECTS	LOG BOOK		P/V	-	-	
1.11	SLIP RING (WHEREVER APPLICABLE)	1.SURFACE COND.	MA	VISUAL	100%	-	-	FREE FROM VISUAL DEFECTS	LOG BOOK		P	-	-	
		2.DIMENSIONS	MA	MEASUREMENT	SAMPLE	-	MANUFACTURER'S DRG	MANUFACTURER'S DRG	LOG BOOK		P	-	-	
		3.TEMP.WITH-STAND CAPACITY	MA	ELECT.TEST	SAMPLE	-	MANUFACTURER'S STD./ APPROVED DATASHEET	MANUFACTURER'S STD./ APPROVED DATASHEET	LOG BOOK		P/V	-	-	
		4.HV/IR	MA	-DO-	100%	-	MANUFACTURER'S STD./ APPROVED DATASHEET	MANUFACTURER'S STD./ APPROVED DATASHEET	LOG BOOK		P/V	-	-	
1.12	OIL SEALS & GASKETS	1.MATERIAL OF GASKET	MA	VISUAL	100%	-	MANUFACTURER'S DRG/SPECS	MANUFACTURER'S DRG./ SPECS.	LOG BOOK		P	-	-	
		2.SURFACE COND.	MA	VISUAL	100%	-	-	FREE FROM VISUAL DEFECTS	LOG BOOK		P	-	-	
		3.DIMENSIONS	MA	MEASUREMENT	SAMPLE	-	MANUFACTURER'S DRG	MANUFACTURER'S DRG	LOG BOOK		P	-	-	

BHEL					
ENGINEERING			QUALITY		
	Sign & Date	Name		Sign & Date	Name
Prepared by:		HEMA KHUSHWAHA	Checked by:		KUNAL GANDHI
Reviewed by:		PRAVEEN DUTTA	Reviewed by:		R K JAISWAL

BIDDER/ SUPPLIER	
Sign & Date	
Seal	

FOR CUSTOMER REVIEW & APPROVAL			
Doc No:			
	Sign & Date	Name	Seal
Reviewed by:			
Approved by:			

बी एच ई एल BHEL	MANUFACTURER/ BIDDER/ SUPPLIER NAME & ADDRESS	STANDARD QUALITY PLAN	SPEC. NO :	DATE:17.04.2020
		CUSTOMER :	QP NO.: PE-QP-999-Q-007, REV-04	
		PROJECT:	PO NO.:	
		ITEM: AC ELECT. MOTORS 55 KW & ABOVE (LV (415V)) / SYSTEM:	SECTION: II	SHEET 5 OF 9

Sl No.	Component & Operations	Characteristics	Class	Type of Check	Quantum Of check		Reference Document	Acceptance NORMS	FORMAT OF RECORD		AGENCY			
1	2	3	4	5	6		7	8	9	*	**			
					M	C/N				D	M	C	N	
2.0	IN PROCESS													
2.1	STATOR FRAME WELDING (IN CASE OF FABRICATED STATOR)	1.WORKMANSHIP & CLEANNESS	MA	VISUAL	100%	-	MANUFACTURER'S DRG	GOOD FINISH	LOG BOOK		P/W	-	-	
		2.DIMENSIONS	MA	MEASUREMENT	100%	-	MANUFACTURER'S DRG	MANUFACTURER'S DRG	LOG BOOK		P	-	-	
2.2	MACHINING	1.FINISH	MA	VISUAL	100%	-	-DO-	GOOD FINISH	LOG BOOK		P	-	-	
		2.DIMENSIONS	MA	MEASUREMENT	100%	-	MANUFACTURER'S DRG	MANUFACTURER'S DRG	LOG BOOK		P	-	-	
		3.SHAFT SURFACE FLOWS	MA	PT	100%	-	MANUFACTURER'S STD./ ASTM-E165	MANUFACTURER'S STD./ APPROVED DATASHEET.	LOG BOOK	✔	P	V	-	
2.3	PAINTING	1.SURFACE PREPARATION	MA	VISUAL	100%	-	MANUFACTURER'S STD./APPROVED DATASHEET	MANUFACTURER'S STD./APPROVED DATASHEET	LOG BOOK		P	-	-	
		2.PAINT THICKNESS (BOTH PRIMER & FINISH COAT)	MA	MEASUREMENT BY ELCOMETER	SAMPLE	-	MANUFACTURER'S STD./APPROVED DATASHEET	MANUFACTURER'S STD./APPROVED DATASHEET	LOG BOOK		P	-	-	
		3.SHADE	MA	VISUAL	SAMPLE	-	MANUFACTURER'S STD./APPROVED DATASHEET	MANUFACTURER'S STD./APPROVED DATASHEET	LOG BOOK		P	-	-	
		4.ADHESION	MA	CROSS CUTTING & TAPE TEST	SAMPLE	-	MANUFACTURER'S STD./APPROVED DATASHEET	MANUFACTURER'S STD./APPROVED DATASHEET	LOG BOOK		P	-	-	

BHEL					
ENGINEERING			QUALITY		
	Sign & Date	Name		Sign & Date	Name
Prepared by:		HEMA KHUSHWAHA	Checked by:		KUNAL GANDHI
Reviewed by:		PRAVEEN DUTTA	Reviewed by:		R K JAISWAL

BIDDER/ SUPPLIER	
Sign & Date	
Seal	

FOR CUSTOMER REVIEW & APPROVAL			
Doc No:			
	Sign & Date	Name	Seal
Reviewed by:			
Approved by:			

बी एच ई एल BHEL	MANUFACTURER/ BIDDER/ SUPPLIER NAME & ADDRESS	STANDARD QUALITY PLAN	SPEC. NO :	DATE:17.04.2020
		CUSTOMER :	QP NO.: PE-QP-999-Q-007, REV-04	
		PROJECT:	PO NO.:	
		ITEM: AC ELECT. MOTORS 55 KW & ABOVE (LV (415V)) SYSTEM:	SECTION: II	SHEET 6 OF 9

Sl No.	Component & Operations	Characteristics	Class	Type of Check	Quantum Of check		Reference Document	Acceptance NORMS	FORMAT OF RECORD		AGENCY			
1	2	3	4	5	6		7	8	9	*	**			
					M	C/N				D	M	C	N	
2.4	SHEET STACKING	1.COMPLETENESS	MA	MEASUREMENT	SAMPLE	-	MANUFACTURER'S STD.	MANUFACTURER'S STD.	LOG BOOK		P	-	-	
		2.COMPRESSION & TIGHTENING	MA	MEASUREMENT	100%	-	MANUFACTURER'S STD.	MANUFACTURER'S STD.	LOG BOOK		P	-	-	
2.5	WINDING	1.COMPLETENESS	CR	VISUAL	100%	-	MANUFACTURER'S STD./APPROVED DATASHEET	MANUFACTURER'S STD./APPROVED DATASHEET	LOG BOOK		P	-	-	
		2.CLEANLINESS	CR	VISUAL	100%	-	MANUFACTURER'S STD./APPROVED DATASHEET	MANUFACTURER'S STD./APPROVED DATASHEET	LOG BOOK		P	-	-	
		3.IR-HV-IR	CR	ELECT. TEST	100%	-	IS-325//IS-12615/IEC-60034 PART-1	IS-325//IS-12615/IEC-60034 PART-1	TEST/INSPC. REPORT	✔	P	V	-	
		4.RESISTANCE	CR	ELECT. TEST	100%	-	IS-325//IS-12615/IEC-60034 PART-1	IS-325//IS-12615/IEC-60034 PART-1	TEST/INSPC. REPORT	✔	P	V	-	
		5.INTERTURN INSULATION	CR	ELECT. TEST	100%	-	IS-325//IS-12615/IEC-60034 PART-1	IS-325//IS-12615/IEC-60034 PART-1	TEST/INSPC. REPORT		P	-	-	
2.6	IMPREGNATION	1.VISCOSCITY	MA	PHY. TEST	AT STARTING	-	MANUFACTURER'S STANDARD	MANUFACTURER'S STANDARD	LOG BOOK		P	-	-	
		2.TEMP. PRESSURE VACCUM	MA	PROCESS CHECK	CONTINUOUS	-	MANUFACTURER'S STANDARD	MANUFACTURER'S STANDARD	LOG BOOK		P	-	-	
		3.NO. OF DIPS	MA	PROCESS CHECK	CONTINUOUS	-	MANUFACTURER'S STANDARD	MANUFACTURER'S STANDARD	LOG BOOK	✔	P	V	-	THREE DIPS TO BE GIVEN

BHEL					
ENGINEERING			QUALITY		
	Sign & Date	Name		Sign & Date	Name
Prepared by:		HEMA KHUSHWAHA	Checked by:		KUNAL GANDHI
Reviewed by:		PRAVEEN DUTTA	Reviewed by:		R K JAISWAL

BIDDER/ SUPPLIER	
Sign & Date	
Seal	

FOR CUSTOMER REVIEW & APPROVAL			
Doc No:			
	Sign & Date	Name	Seal
Reviewed by:			
Approved by:			

बीएचईएल BHEL	MANUFACTURER/ BIDDER/ SUPPLIER NAME & ADDRESS	STANDARD QUALITY PLAN	SPEC. NO :	DATE:17.04.2020
		CUSTOMER :	QP NO.: PE-QP-999-Q-007, REV-04	
		PROJECT:	PO NO.:	
		ITEM: AC ELECT. MOTORS 55 KW & ABOVE (LV (415V)) / SYSTEM:	SECTION: II	SHEET 7 OF 9

Sl No.	Component & Operations	Characteristics	Class	Type of Check	Quantum Of check		Reference Document	Acceptance NORMS	FORMAT OF RECORD		AGENCY			
1	2	3	4	5	6		7	8	9	*	**			
					M	C/N				D	M	C	N	
		4.DURATION	MA	PROCESS CHECK	CONTINUOUS	-	MANUFACTURER'S STANDARD	MANUFACTURER'S STANDARD	LOG BOOK	✔	P	V	-	
2.7	COMPLETE STATOR ASSEMBLY	1.COMPACTNESS & CLEANLINESS	MA	VISUAL	100%	-	MANUFACTURER'S STANDARD	MANUFACTURER'S STANDARD	LOG BOOK		P	-	-	
2.8	BRAZING/COMPRESSION JOINT	1.COMPLETENESS	CR	VISUAL	100%	-	MANUFACTURER'S STANDARD	MANUFACTURER'S STANDARD	LOG BOOK		P	-	-	
		2.SOUNDNESS	CR	MALLET TEST & UT	100%	-	MANUFACTURER'S STANDARD	MANUFACTURER'S STANDARD	TEST/INSPC. REPORT	✔	P	V	-	
		3.HV	MA	ELECT. TEST	100%	-	MANUFACTURER'S STANDARD	MANUFACTURER'S STANDARD	TEST/INSPC. REPORT	✔	P	V	-	
2.9	COMPLETE ROTOR ASSEMBLY	1.RESIDUAL UNBALANCE	CR	DYN. BALANCE	100%	-	MANUFACTURER'S SPEC./ ISO 1940	MANUFACTURER'S DWG.	LOG BOOK		P	-	-	
		2.SOUNDNESS OF DIE CASTING	CR	ELECT. (GROWLER TEST)	100%	-	MANUFACTURER'S SPEC.	MANUFACTURER'S SPEC.	TEST/INSPC. REPORT	✔	P	V	-	
2.10	ASSEMBLY	1.ALIGNMENT	MA	MEAS.	100%	-	MANUFACTURER'S SPEC.	MANUFACTURER'S SPEC.	LOG BOOK		P	-	-	
		2.WORKMANSHIP	MA	VISUAL	100%	-	MANUFACTURER'S SPEC.	MANUFACTURER'S SPEC.	LOG BOOK		P	-	-	
		3.AXIAL PLAY	MA	MEAS.	100%	-	MANUFACTURER'S SPEC.	MANUFACTURER'S SPEC.	LOG BOOK	✔	P	V	-	
		4.DIMENSIONS	MA	MEAS.	100%	-	MANUFACTURER'S DRG./ MANUFACTURER'S SPEC.	MANUFACTURER'S DRG./ MANUFACTURER'S SPEC.	LOG BOOK		P	-	-	
		5.CORRECTNESS, COMPLETENESS TERMINATIONS/ MARKING/ COLOUR CODE	MA	VISUAL	100%	-	MANUFACTURER'S SPEC.	MANUFACTURER'S SPEC.	LOG BOOK		P	-	-	
		6. RTD, BTD & SPACE HEATER MOUNTING.	MA	VISUAL	100%	-	MANUFACTURER'S SPEC.	MANUFACTURER'S SPEC.	LOG BOOK	✔	P	V	-	

BHEL					
ENGINEERING			QUALITY		
	Sign & Date	Name		Sign & Date	Name
Prepared by:		HEMA KHUSHWAHA	Checked by:		KUNAL GANDHI
Reviewed by:		PRAVEEN DUTTA	Reviewed by:		R K JAISWAL

BIDDER/ SUPPLIER	
Sign & Date	
Seal	

FOR CUSTOMER REVIEW & APPROVAL			
Doc No:			
	Sign & Date	Name	Seal
Reviewed by:			
Approved by:			

TENDER NO.: PSER:SCT:KGN-C2101:21

बीएचईएल BHEL	MANUFACTURER/ BIDDER/ SUPPLIER NAME & ADDRESS	STANDARD QUALITY PLAN	SPEC. NO :	DATE:17.04.2020
		CUSTOMER :	QP NO.: PE-QP-999-Q-007, REV-04	
		PROJECT:	PO NO.:	
		ITEM: AC ELECT. MOTORS 55 KW & ABOVE (LV (415V)) / SYSTEM:	SECTION: II	SHEET 8 OF 9

Sl No.	Component & Operations	Characteristics	Class	Type of Check	Quantum Of check		Reference Document	Acceptance NORMS	FORMAT OF RECORD		AGENCY			
1	2	3	4	5	6		7	8	9	*	**			
					M	C/N				D	M	C	N	
3.0	TESTS	1.TYPE TESTS INCLUDING SPECIAL TESTS	MA	ELECT.TEST	1/TYPE/SIZE	1/TYPE/SIZE	IS-325//IS-12615/APPROVED DATASHEET	IS-325/IS-12615/APPROVED DATASHEET	TEST REPORT	✔	P	W*	-	* NOTE - 1
		2.ROUTINE TESTS INCLUDING SPECIAL TEST	MA	ELECT.TEST	100%	-	IS-325//IS-12615/APPROVED DATASHEET	IS-325/IS-12615/APPROVED DATASHEET	TEST REPORT	✔	P	V$	-	$ NOTE - 2
		3.VIBRATION & NOISE LEVEL	MA	ELECT.TEST	100%	-	IS: 12075 / IEC 60034-14 & IS-12065	IS: 12075 / IEC 60034-14 & IS-12065	TEST REPORT	✔	P	V$	-	$ NOTE - 2
		4.OVERALL DIMENSIONS AND ORIENTATION	MA	MEASUREMENT & VISUAL	100%	100%	APPROVED DRG/DATA SHEET	APPROVED DRG/DATA SHEET &	TEST/INSPC. REPORT	✔	P	W	-	
		5.DEGREE OF PROTECTION	MA	ELECT. & MECH. TEST	1/TYPE/ SIZE	-	IEC 60034-5/IS-12615	APPROVED DATASHEET	TC	✔	P	V	-	TC FROM AN INDEPENDENT LABORATORY, REFER NOTE-3
		6. MEASUREMENT OF RESISTANCE OF RTD & BTD	MA	ELECT. & MECH. TEST	100%	-	IS-325//IS-12615/IEC-60034 PART-1/IS: 12802	IS-325/IS-12615/IEC-60034 PART-1/IS: 12802	TC	✔	P	V$	-	$ NOTE - 2
		7. MEASUREMENT OF RESISTANCE, IR OF SPACE HEATER	MA	ELECT. & MECH. TEST	100%	-	IS-325//IS-12615/IEC-60034 PART-1	IS-325/IS-12615/IEC-60034 PART-1	TC	✔	P	V$	-	$ NOTE - 2
		8. NAME PLATE DETAILS	MA	VISUAL	100%	-	IS-325//IS-12615& DATA SHEET	IS-325//IS-12615 & DATA SHEET	TEST/INSPC. REPORT	✔	P	V$	-	$ NOTE - 2
		9.EXPLOSION FLAME PROOF NESS (IF SPECIFIED)	MA	EXPLOSION FLAME PROOF TEST	1/TYPE	-	IS 2148 / IEC 60079-1	IS 2148 / IEC 60079-1	TC	✔	P	V	-	TC FROM AN INDEPENDENT LABORATORY, REFER NOTE-3
		10. PAINT SHADE, THICKNESS & FINISH	MA	VISUAL & MEASUREMENT BY ELKOMETER	SAMPLE	SAMPLE	APPROVED DATASHEET	APPROVED DATASHEET	TC	✔	P	W$	-	SAMPLING PLAN TO BE DECIDED BY INSPECTION AGENCY $ NOTE - 2

BHEL					
ENGINEERING			QUALITY		
	Sign & Date	Name		Sign & Date	Name
Prepared by:		HEMA KHUSHWAHA	Checked by:		KUNAL GANDHI
Reviewed by:		PRAVEEN DUTTA	Reviewed by:		R K JAISWAL

BIDDER/ SUPPLIER	
Sign & Date	
Seal	

FOR CUSTOMER REVIEW & APPROVAL			
Doc No:			
	Sign & Date	Name	Seal
Reviewed by:			
Approved by:			

बीएचईएल BHEL	MANUFACTURER/ BIDDER/ SUPPLIER NAME & ADDRESS	STANDARD QUALITY PLAN	SPEC. NO :	DATE:17.04.2020
		CUSTOMER :	QP NO.: PE-QP-999-Q-007, REV-04	
		PROJECT:	PO NO.:	
		ITEM: AC ELECT. MOTORS 55 KW & ABOVE (LV (415V)) / SYSTEM:	SECTION: II	SHEET 9 OF 9

Sl No.	Component & Operations	Characteristics	Class	Type of Check	Quantum Of check		Reference Document	Acceptance NORMS	FORMAT OF RECORD		AGENCY			
1	2	3	4	5	6		7	8	9	*	**			
					M	C/N				D	M	C	N	
4.0	PACKING	SURFACE FINISH & COMPLETENESS	MA	VISUAL	100%	100%	AS PER MANUFACT. STANDARD / (#)	AS PER MANUFACT. STANDARD / (#)	INSPC. REPORT	✔	P	W	-	(#): REFER NOTE-8

NOTES:

1 DEPENDING UPON THE SIZE AND CRITICALLY, WITNESSING BY BHEL SHALL BE DECIDED.

2 ROUTINE TESTS ON 100% MOTORS SHALL BE DONE BY THE VENDOR. HOWEVER, BHEL/CUSTOMER SHALL WITNESS ROUTINE TESTS ON RANDOM SAMPLES. THE SAMPLING PLAN SHALL BE MUTUALLY AGREED UPON.

3 IN CASE TEST CERTIFICATES FOR THESE TESTS ON SIMILAR TYPE, SIZE AND DESIGN OF MOTOR FROM INDEPENDENT LABORATORY ARE AVAILABLE, THE SAME IS VALID FOR 5 YEARS.

4 BHEL RESERVES THE RIGHT TO PERFORM REPEAT TEST, IF REQUIRED.

5 AFTER PACKING AND PRIOR TO ISSUE MDCC, PHOTOGRAPHS OF ITEMS TO BE DESPATCHED SHALL BE SENT TO BHEL PURCHASE GROUP FOR REVIEW.

6 IN CASE , ANY CHANGES IN QP COMMENTED BY CUSTOMER AT CONTRACT STAGE SHALL BE CARRIED OUT BY BIDDER WITHOUT ANY IMPLICATION TO BHEL/ CUSTOMER.

7 PROJECT SPECIFIC QP TO BE DEVELOPED BASED ON CUSTOMER REQUIREMENT.

8 FOR EXPORT JOB, BHEL TECHNICAL SPECIFICATION FOR SEAWORTHY PACKING TO BE FOLLOWED.

9 PACKING SHALL BE SUITABLE FOR STORAGE AT SITE IN TROPICAL CLIMATE CONDITIONS.

10 LATEST REVISION/ YEAR OF ISSUE OF ALL THE STANDARDS (IS/ ASME/ IEC ETC.) INDICATED IN QP SHALL BE REFERRED.

LEGENDS:

*RECORDS, INDENTIFIED WITH "TICK"(√) SHALL BE ESSENTIALLY INCLUDED BY SUPPLIER IN QA DOCUMENTATION,

** **M**: SUPPLIER/ MANUFACTURER/ SUB-SUPPLIER, B: MAIN SUPPLIER/ BHEL/ THIRD PARTY INSPECTION AGENCY, **C**: CUSTOMER,

P: PERFORM, **W**: WITNESS, **V:** VERIFICATION, AS APPROPRIATE

MA: MAJOR, **MI**: MINOR, **CR:** CRITICAL

D: DOCUMENT

BHEL					
ENGINEERING			QUALITY		
	Sign & Date	Name		Sign & Date	Name
Prepared by:		HEMA KHUSHWAHA	Checked by:		KUNAL GANDHI
Reviewed by:		PRAVEEN DUTTA	Reviewed by:		R K JAISWAL

BIDDER/ SUPPLIER	
Sign & Date	
Seal	

FOR CUSTOMER REVIEW & APPROVAL			
Doc No:			
	Sign & Date	Name	Seal
Reviewed by:			
Approved by:			

TENDER NO.: PSER:SCT:KGN-C2101:21

LOAD TITLE	RATING (KW / A)		UNIT (U)/STN (S)	Nos.		VOLTAGE CODE*	FEEDER CODE**	EMER. LOAD (Y)	CONT.(C)/ INTT.(I)	STARTING TIME >5 SEC (Y)	LOCATION	BOARD NO.	CABLE		BLOCK CABLE DRG. No.	CONTROL CODE	REMARKS	LOAD No.
	NAME PLATE	MAX. CONT. DEMAND (MCR)		RUNNING	STANDBY								SIZE CODE	NOs				
1	2	3	4	5	6	7	8	9	10	11	12	13	14	15	16	17	18	19

ANNEXURE-III

NOTES:
1. COLUMN 1 TO 12 & 18 SHALL BE FILLED BY THE REQUISITIONER (ORIGINATING AGENCY); REMAINING COLUMNS ARE TO BE FILLED UP BY PEM (ELECTRICAL)/ CUSTOMER
2. ABBREVIATIONS : * VOLTAGE CODE (7):- (ac) A=11 KV, B=6.6 KV, C=3.3 KV, D=415 V, E=240 V (1 PH), F=110 V (cc): G=220 V, H=110 V, J=48 V, K=+24V, L=-24 V
: ** FEEDER CODE (8):- U=UNIDIRECTIONAL STARTER, B=BI-DIRECTIONAL STARTER, S=SUPPLY FEEDER, D=SUPPLY FEEDER (CONTACTER CONTROLLED)

LOAD DATA (ELECTRICAL)			ORIGINATING AGENCY		PEM (ELECTRICAL)	
	JOB NO.		NAME		DATA FILLED UP ON	
	PROJECT TITLE		SIGN.		DATA ENTERED ON	
	SYSTEM		SHEET 1 OF 1	REV. 00	DE'S SIGN. & DATE	
	DEPTT. / SECTION	MAUX				

CABLE ID	FROM	TO	PURPOSE	CABLE SCOPE (BHEL PEM/VENDOR)	REMARKS	CABLE SIZE	PATH CABLE NO

SPECIFIC TECHNICAL REQUIREMENTS FOR ELECTRICAL WORKS

Note : In case of any conflict between section-C & section-D of electrical portion, section-C of electrical portion shall prevail.

TECHNICAL SPECIFICATION FOR CHIMNEY(ELECTRICAL)
4X210MW + 3X500MW NTPC KAHALGAON TPP STAGE I & II- FGD

Content Sheet

Sr.no	Description	Remarks
1	Cover Sheet	Page no -1
2	Content Sheet	Page no-2
3	SEC-C	Page no-3 to 19
4	SEC-D	Page no-20 to 179

TECHNICAL SPECIFICATION FOR CHIMNEY(ELECTRICAL)
4X210MW + 3X500MW NTPC KAHALGAON TPP STAGE I & II- FGD

	TECHNICAL SPECIFICATION FOR ELECTRICAL WORKS FOR CHIMNEY
1.00.00	**INTENT OF SPECIFICATION**
	The following specification shall be applicable to all the electrical equipment furnished and erected under this specification. Items of work not specifically stated in this specification but which are necessary for meeting the requirements of this specification shall be included in the scope.
2.00.00	**SCOPE OF WORK**
2.01.00	The Contractor shall include in his scope of work the design, engineering, manufacture, supply, erection, testing and commissioning of the following equipment / system complete with all materials and accessories for each chimney: i) Main distribution board, emergency distribution board, elevator board, power, lighting panels and DBs. ii) All lighting fixtures and socket outlets with complete wiring. iii) Aviation Obstruction lighting system. iv) Power and control cables. v) Cabling system. vi) Lightning protection system. vii) Earthing system. viii) Communication system.
2.02.00	The Contractor shall provide 1 No., 415 volt, 3 phase, 4 wire feeder for power supply connection to main distribution board located at chimney base for further distribution of power.
2.03.00	In addition to the above the Contractor shall also provide one No. 415 volt, 3 phase, 3 wire emergency power supply for emergency distribution board located at chimney base. This board shall also receive one feeder from main distribution board described above. Contractor shall provide auto-change over supply to healthy source on failure of any source.
2.04.00	The details of the power supply are given below. The Contractor shall furnish the equipment to suit the same.

	a) **415 volt System (normal)** i) System voltage — 415 ±10% V, three phase and 4 wire neutral solidly earthed ii) System frequency — 50 ± 5% Hz iii) Combined voltage and Frequency variation — 10% iv) Fault Level — 50 KArms(105 KA peak)/1 sec b) **415 volt System (emergency)** i) System voltage — 415 ±10% V three phase and three wire system. ii) System frequency — 50 ± 5% Hz iii) Combined voltage and frequency variation — 10% iv) Fault Level — 50 kA c) In case any power supply other than 415 V, 3 phase indicated above is required, the transformation for same shall be included in the Contractor's scope of work.
2.05.00	Not used.
2.06.00	All bought out electrical equipment like cables, distribution boards/panels, conduits, lighting fixtures, power receptacles, aviation lighting etc. shall be from reputed manufacturers who have manufactured and supplied equipment of the type and rating specified and this equipment should have been in successful operation in chimneys and other structures under similar service conditions. The sub vendors list and makes of all equipment/devices shall be subjected to Owner's approval.
3.00.00	**STANDARDS AND REGULATIONS**
3.01.00	The equipment supplied shall comply with the relevant IS Standards. All standards, specifications and codes of practice referred to herein shall be the

	latest editions including all applicable official amendments and revision as on date of opening of bid.
3.02.00	The electrical equipment/installations shall comply with the requirements of the following Rules/ Regulations as amended up to date: i) The Indian Electricity Rules/Acts. ii) National Electrical codes and Indian standards. iii) International Civil Aviation organisation Regulations. iv) National Airport Authority/DARA Regulations.
4.00.00	**GENERAL REQUIREMENTS**
4.01.00	**Ambient Conditions** The equipment shall be suitable for installation and render trouble free operation at higher ambient temperature and rigorous weather conditions prevailing at chimney. Ambient temperature for design of all equipment shall be considered as 55 degrees C which is likely to be encountered during service when the chimney is in full operation.
4.02.00	The successful Bidder shall be required to carry out the detailed engineering such as: a) Preparation of detailed wiring/schematic diagrams for distribution boards and lighting panels/DBs. b) Preparation of conduit/cable layouts and conduit/ cable schedule. c) Preparation of detailed lighting layout drawings. d) Preparation of detailed wiring / layout drawings for aviation obstruction lighting system. e) Preparation of detailed earthing and lightning protection system drawing. f) Preparation of mounting detail drawings for various equipments. g) Preparation and submission of all approved drawings duly marked up, to reflect the 'as built' status, along with reproduceables.
4.03.00	The successful bidder shall submit the following documents for all the equipments/items being supplied : a) Technical particulars and catalogues

	b) Routine & Type Test reports c) Instruction manual for storage, unpacking, handling at site, erection, precommissioning etc. d) Operation & Maintenance Manual
5.00.00	**TECHNICAL REQUIREMENTS**
5.01.00	**Distribution boards/Elevator board/Power panels**
5.01.01	Distribution Board shall be of metal enclosed, single front, indoor, floor mounted, free standing, fixed type conforming to IS 13947-PART-I. The Elevator board & Power panels shall be of floor/wall mounted type. The equipment shall be supplied fully assembled and wired, complete with base frame and anchoring arrangement, gland plates, internal wiring, terminal blocks and suitable for termination of external power and control cables.Overall height of Board shall not exceed 2450 mm.All board frames and load bearing members shall be fabricated using suitable mild steel structural sections or pressed and shaped cold-rolled sheet steel of thickness not less than 2.0 mm. Frames shall be enclosed in cold-rolled sheet steel of thickness not less than 1.6 mm. Doors and covers shall also be of cold rolled sheet steel of thickness not less than 1.6 mm. Stiffeners shall be provided wherever necessary. The gland plates thickness shall be 3.0 mm (minimum) for hot/cold-rolled sheet steel and 4.0 mm (minimum) for non-magnetic material. All panels shall be dust and vermin proof.
5.01.02	The Board shall be divided into distinct vertical sections, each comprising of : i) A completely enclosed busbar compartment for running horizontal and vertical busbars. ii) Completely enclosed switchgear compartment(s) one for each circuit of outgoing feeder. iii) A cable alley for power and control cables of 250 mm width. Cable alley shall have no exposed live parts and shall have no communication with busbar compartment. Cable terminations in cable alley shall be designed to meet Form IVb Type & (as per IEC 60439) for safety. The front of the compartment shall be provided with hinged single leaf door with locking facility.
5.01.03	Boards shall be provided with phase & neutral busbars along entire length of board. The minimum air clearance between live parts shall be 25mm for busbars and 10mm elsewhere both for phase to phase and phase to earth. Wherever such clearance is not available, the live parts shall be fully insulated/shrouded.

TECHNICAL SPECIFICATION FOR CHIMNEY(ELECTRICAL)
4X210MW + 3X500MW NTPC KAHALGAON TPP STAGE I & II- FGD

	However for busbars minimum 25mm air clearance shall be maintained irrespective of insulated/shrouded busbars are provided.
5.01.04	All busbars shall be adequately supported by non-hygroscopic, non combustible, track-resistance and high strength sheet moulded compound or equivalent type polyester fiber glass moulded insulators. Temperature rise of busbars & contacts when carrying rated current along the full run shall not exceed 55 deg.C with silver plated joints and 40 deg.C with all other type of joints over an outside ambient of 50 deg.C. Busbars and jumper connections shall be of high conductivity aluminium alloy / copper.
5.01.05	Paint shade for DBs & panels excluding end covers shall be RAL 9002 & shall be RAL 5012 for extreme end covers.
5.01.06	Boards shall be designed for IP 52 degree of protection.
5.01.07	Air break switches shall be of heavy duty, single throw, group operated, load break, fault make type, complying with IS 13947 PART-3. Incoming switches shall have door interlocks and pad locking facility. Fixed contacts shall be of shrouded type. Switches shall be of AC 22 utilisation category.
5.01.08	All fuses shall be of HRC type with operation indicator, and shall be of suitable rating conforming to IS 9224. They shall be mounted on fuse carriers. Isolating switches shall be of AC 23A category when used in motor circuit & AC 22A category for other applications. Fuse switch combination shall be provided wherever possible.
5.01.09	Contactors shall be of air break, electromagnetic type suitable for DOL starting of motors and shall be of utilization category AC-3 for ordinary & AC-4 for reversing starters. Nominal coil voltages of contactors shall be as required. AC contactors shall operate satisfactorily between 85% to 110% of the voltage. DC contactors shall be of DC-3 category.
5.01.10	Current transformers shall be completely encapsulated, cast resin insulated type, having accuracy class of 1.0 conforming to IS 2705.
5.01.11	Selector switches shall be of rotary type with escutcheon plates clearly marked to show the function and positions. Ammeter and voltmeter selector switches shall have four stay-put positions with adequate number of contacts for three phase 4-wire system.
5.01.12	Indicating lamps shall be cluster LED type. Bulbs and lamp covers shall be easily replaceable from front of the panel.
5.01.13	All indicating meters shall be flush mounted on panel front. The instruments shall be of at least 96 mm square size with 90 degree scales and shall have an accuracy class of 2.0 or better.

TECHNICAL SPECIFICATION FOR CHIMNEY(ELECTRICAL)
4X210MW + 3X500MW NTPC KAHALGAON TPP STAGE I & II- FGD

5.01.14	Miniature circuit breakers (MCB's) shall be current limiting type with magnetic and thermal release suitable for manual closing and automatic tripping under fault condition. MCB's shall have interrupting capacity of 9 KA rms. MCB knob shall be marked with ON/OFF indication. A trip free release shall be provided to ensure tripping on fault even if the knob is held in ON position. MCB terminal shall be shrouded to avoid accidental contact. It shall conform to IS 8828.
5.01.15	Each panel shall be provided with prominent, engraved identification plates for all front mounted equipment. Panel identification name plates shall be provided at front and rear. All name plates shall be of non-rusting metal or 3-ply Lamicoid, with white engraved lettering on black back ground. Inscription and lettering sizes shall be subject to Owner's approval. Labels for fuses shall also clearly indicate current ratings of the respective fuses. These labels shall be positioned so as to be clearly visible and shall give the device number, as mentioned in the wiring drawings.
5.01.16	All internal control wiring shall be carried out with 1100 V grade, single core, 1.5 square mm or larger, stranded copper wires having color - coded, PVC insulation. Space heater / power circuits shall have wires having adequate current carrying capacity, but not less than 2.5 sq.mm Copper. Internal terminals of stranded conductors shall be made with solderless crimping type tinned copper lugs. Insulating sleeves shall be provided over the exposed part of lugs. Engraved core identification ferrules marked to correspond with panel wiring diagrams shall be fitted at both ends of each wire. Jumper wires between two terminal blocks shall also be ferruled at both ends.
5.01.17	A continuous galvanised steel grounding bus of 50 mm x 6 mm size shall be provided along the bottom of the panel structure. It shall run continuously through out the length of the panel and shall have provision at both ends for connection to the grounding grid. Metallic parts of all components shall be effectively earthed using green colored insulated copper wire or other approved means. Electrical continuity of the whole enclosure/frame work shall be maintained even after painting. All hinged doors shall be earthed through flexible earthing braids of copper.
5.01.18	The space heaters shall be suitable for continuous operation on 240 V AC, 50 Hz, single phase supply and shall be automatically controlled by thermostat. Each free standing panel section shall have a 240 V AC, plug point and a light operated by door switch. Necessary isolating MCBs shall also be provided for protection.
5.01.19	All sheet steel work shall be pretreated in tanks in accordance with IS 6005. The phosphated surfaces shall be rinsed and passivated, given a stoved lead oxide primer coating, followed by two coats of finishing synthetic enamel paint. Each coat of primary and finishing paint shall be of slightly different shade to enable inspection of painting. Finishing paint on panels exterior shall be shade RAL-9002 unless required otherwise by the Owner. The inside of the panels shall be glossy white.

TECHNICAL SPECIFICATION FOR CHIMNEY(ELECTRICAL)
4X210MW + 3X500MW NTPC KAHALGAON TPP STAGE I & II- FGD

5.01.20	Terminal blocks shall be of 1100V grade, rated for cable ampacity, in one piece moulding, complete with insulating carriers, terminals and identification strips. For control circuits it shall be of Klippon type and for power circuits it shall be of stud type.
5.01.21	Typical details of Feeders of Main distribution board, Emergency distribution board, Elevator board & Power panels etc. are shown in the enclosed drawings. However, No. and size of Distribution boards/panels/feeders shall be as per actual requirement.
5.01.22	Lighting transformers shall be dry type, natural air cooled epoxy insulated. Impedance of lighting transformer shall be so selected that the fault level of lighting system shall be reduced to 3 to 5 kA. Lighting transformers shall be tested as per IS:2026. Off-circuit tap changer with +/- 2.5% and +/- 5% tapping shall be provided. In case the transformers are not mounted inside the DB, the same shall be housed in a separate 2 mm thick CR sheet steel enclosure with IP-42 degree of protection as per IS:2147. However, the transformer terminal box shall have IP-52 degree of protection.
5.02.00	**Lighting Panels (LP) / Distribution Boards (DB)**
5.02.01	Lighting panel / DBs shall be constructed out of 2 mm thick CRCA sheet steel. The door shall be hinged and the panel / DB shall be gasketted to achieve IP:55 degree of protection. The panel / DB shall be provided with terminal blocks for incoming and outgoing circuits, earthing terminals, M.S. mounting brackets suitable for surface mounting on wall/column/structure, allen keys with bolts as locking arrangements, circuit directory plate & circuit diagram fitted on the inside of the door etc. Removable gland plates shall be provided for top/bottom entry of cables/conduits.
5.02.02	Wiring inside the panel / DB shall be carried out with 1100 V grade PVC insulated stranded copper conductors of adequate size. On both ends of each wire engraved identification ferrules shall be provided.
5.02.03	Busbar shall be of Aluminium alloy / copper conforming to clauses 5.01.03 & 5.01.04.
5.02.04	All MCB's/Isolators etc. shall be mounted inside the panel / DB and an inner bakelite sheet/fibre glass sheet shall be provided inside such that operating knobs of MCBs etc. project out of it for safe operation against accidental contact. Operating handle of Incoming Isolator shall project out of door.
5.02.05	Equipment mounted inside the panel / DB shall be provided with individual labels with equipment designation/rating. Front of the panel / DB shall be provided with label engraved with designation of the panel / DB as furnished by the owner. Labels shall be made of 3 ply lamicoid/engraved PVC having white letters on black background.

TECHNICAL SPECIFICATION FOR CHIMNEY(ELECTRICAL)
4X210MW + 3X500MW NTPC KAHALGAON TPP STAGE I & II- FGD

5.02.06	Terminal blocks shall be 1100 V grade, stud type, moulded in melamine, suitable for terminating incoming cable and outgoing circuit of specified size. All the terminals shall be shrouded, numbered and provided with identification strip for the feeders.
5.02.07	Miniature Circuit Breaker and isolator shall of same type as specified under cl. 5.01.14. Other features of the panel / DB shall be same as that of distribution board.
5.03.00	**Lighting System**
5.03.01	The lighting system shall provide adequate illumination at various platforms, stairways, landing and other areas of the chimney.
5.03.02	The following average illumination levels shall be achieved and guaranteed by the contractor after considering maintenance factor of not more than 0.6 : a) On equipment — 150 Lux b) General platform area — 70 Lux c) Stairways and landings — 100 Lux [minimum one (1) light fixture at each landing]. Any additional fixtures to take care of dark patches/shadows shall also be provided.
5.03.03	Power supply for normal lighting system shall be obtained through main distribution board. 80% lighting at various platforms and 50% lighting in staircases shall be fed from normal A.C. source. 20% lighting at various platforms and 50% lighting on staircases shall be fed from emergency AC supply. Emergency AC supply shall be obtained from emergency distribution board.
5.03.04	Lighting fixtures shall be suitable for continuous operation under atmospheric condition prevailing at chimney. Lighting fixtures shall be suitable for operation on 240V, AC, 50 Hz. supply with voltage variation of ± 10% and frequency variation of ± 5% and combined voltage and frequency variation of 10%.
5.03.05	Lighting fixtures shall be dust tight LED, well glass fixtures.
5.03.06	Lighting fixtures shall be designed for IP:55 degree of protection. Power factor shall not be less than 0.85. Ballast shall be of copper wire wound type. Ballast shall include radio interference suppressors. LED lamps shall have screwed cap. All lighting fixtures shall be adequately earthed with galvanised steel wire.
5.03.07	3 Pin Receptacles designed for IP:55 degree of protection shall be provided at every platform level, rated for 20A, 240 V,AC. The Receptacles shall be complete with 20A, 240V, AC switch and 3 pin plug.

5.03.08	Heavy duty welding Receptacle with ELCB rated for 415V, AC, 63A shall be provided at each internal platform level. They shall be metal clad, shrouded diecast aluminium designed for IP:55 degree of protection. The Receptacle unit shall be complete with 63 A, AC 23 category switch unit, plug and safety lid cover.
5.03.09	The Receptacle shall be wall mounted type with bolted front cover and removable gland plate. The Receptacle shall be interlocked such that, a) Switch can be put ON only when the plug is fully engaged. b) Plug can be with drawn only when the switch is in OFF position. c) Covers can be opened only when the switch is in OFF position.
5.03.10	Conduits/pipes shall be complete with fittings and accessories. The size of conduit pipe shall be selected on the basis of maximum 40% fill criteria. Minimum size of the conduit shall not be less than 19mm.Conduits shall be of rigid steel type suitable for heavy mechanical stresses conforming to IS 9537, threaded on both sides and shall be hot dip galvanised. All conduit accessories shall also be hot dip galvanised.
5.03.11	Flexible steel conduits shall be water proof and rust proof made of heat resistant lead coated steel.
5.03.12	Junction boxes and pull boxes shall be made of CRCA sheet steel of 1.60 mm thickness and shall be hot dip galvanised. It shall be designed for IP:55 degree of protection. Junction boxes shall incorporate terminal blocks for termination of incoming and outgoing cables.
5.03.13	Lighting wires shall be of 1100V grade, PVC insulated, stranded copper/Aluminium conductor conforming to IS 694. Lighting wires shall be terminated using solderless crimping type copper lug. Minimum size of wire shall not be less than 1.5 sq.mm in case of copper and 4 sq.mm in case of aluminium. The size of the lighting wire/cables shall be selected such that total voltage drop from LDB to lighting fixture/receptacle does not exceed 3%.
5.04.00	**Cables**
5.04.01	Power cables shall be 1100 volt grade, multicore FRLS-HRPVC/XLPE insulated, PVC inner sheathed, armoured PVC outer sheathed, stranded copper/Aluminium conductor conforming to IS-1554-I.
5.04.02	Control cables shall be of 1100 volt grade, multicore, FRLS-HRPVC/XLPE insulated, PVC inner sheathed, armoured, PVC outer sheathed, stranded copper conductor conforming to IS-1554-I.

TECHNICAL SPECIFICATION FOR CHIMNEY(ELECTRICAL)
4X210MW + 3X500MW NTPC KAHALGAON TPP STAGE I & II- FGD

5.04.03	FRLS properties for power and control cables shall be as follows: a) Oxygen index Min. 29 (As per ASTM D - 2863) b) Acid gas generation: Max 20% (As per 2863) c) Smoke density rating: 60% (As per ASTM D - 2843)
5.04.04	Following factors shall be considered in sizing the cables : a) Continuous current carrying capacity b) Voltage drop c) Short circuit capacity d) Ambient temperature condition prevailing in chimney e) Cable grouping factors
5.04.05	Minimum size of the power cable shall not be less than 2.5 sq.mm copper or 4 sq.mm aluminium. Maximum voltage drop between main distribution board and final equipment shall be limited to 3% when carrying full load current. Cable sizing calculations shall be submitted for approval. Minimum size of control cable shall not be less than 1.5 sq.mm.
5.04.06	Cables shall meet the testing requirements as per IS.
5.04.07	Cables shall be terminated using double compression type cable gland and tinned copper solderless crimping type lug. Cable glands shall be heavy duty, brass machine finished conforming to BS:6121.
5.04.08	Cable trays and accessories shall be of ladder type, hot dip galvanized, made of minimum 2.0 mm thick sheet steel.
5.05.00	**Aviation obstruction lighting system**
5.05.01	Aviation obstruction lighting system shall conform to the requirements of the latest applicable rules of International civil aviation organization (ICAO) and NAA/DARA regulations.
5.05.02	The aviation obstruction lighting system shall be of high intensity type.
5.05.03	The system shall be suitable for operation on 240V ± 10% single phase, 50 Hz, AC supply.
5.05.04	Photo electric controller shall be housed in rugged weather tight, IP 65 enclosure. LED's shall be provided to indicate the operation status of the unit.

TECHNICAL SPECIFICATION FOR CHIMNEY(ELECTRICAL)
4X210MW + 3X500MW NTPC KAHALGAON TPP STAGE I & II- FGD

5.05.05	System controller shall be suitable for operation at specified ambient temperature and shall be wall mounted type. The enclosure shall have IP:55 degree of protection.
5.05.06	Aviation obstruction light unit shall provide easy access to lamp and components.
5.05.07	Four nos. of obstruction lights shall be installed at each specified elevation. The system controller is proposed to be located at 1.2 metre elevation and photo electric controller at about 40 metre elevation. Necessary cables for wiring between photocell & system controller and between system controller & obstacle lights shall be provided.
5.05.08	Each item shall be preassembled, routine tested optically and electrically before shipment.
5.05.09	Bidder shall furnish the complete routine test report of the fixtures, controllers, photocells etc. Testing of aviation lights as per ICAO regulations to be carried out and routine test report to be submitted.
5.05.10	High intensity obstacle lights shall meet the following requirements. (a) It shall be flashing white light. The effective intensity of obstacle light shall be variable and dependent on background luminance as follows. Background luminance — Effective Intensity (i) Above 500 cd/m2 — 200000 cd minimum (ii) 50 to 500 cd/m2 — 20000 ± 25% cd (iii) Less than 50 cd/m2 — 4000 ± 25% cd (b) The obstacle lights shall flash simultaneously at a rate between 40 to 60 per minute. (c) Obstacle lights shall have a day time effective intensity of minimum 200000 cd. The intensity of lights shall reduce automatically to 20000 cd ± 25% at twilight through the use of photocell and again automatically to a night time intensity of 4000 cd ± 25% through the use of photo- cell. (d) The system shall also provide automatic sensing and display of system status and aviation lamp failure detection.
5.05.11	The distance between lighting elevations shall not be more than 105 Metre and lowest lighting elevation shall not be less than 70 metre.

5.05.12	The light unit shall have adjustable bracket with level indicator to ensure accurate vertical placement of the light flash.
5.05.13	Temporary obstruction lighting shall be provided during construction. Obstruction lights shall be provided on the uppermost part of the chimney, or the surrounding scaffolding. As construction progresses each completed level shall be provided with temporary lighting. Temporary obstruction lights shall have four fixtures located in a horizontal plane on the chimney structure to ensure unobstructed visibility of at least one obstruction light from aircraft at any normal angle of approach. Power for operation of the temporary obstruction lights shall be obtained from the construction power system. Supply circuit for these lights shall be furnished, installed and maintained by the Contractor. Temporary obstruction lights shall be operated from sunset to sunrise during each day of the contract period until such time as the Engineer issues instructions in writing to discontinue.
5.06.00	**Earthing**
5.06.01	Earthing system shall conform to IEEE 665 and IS 3043. Earth grid system for chimney shall consist of horizontal conductors and vertical conductors. Horizontal conductor shall be of 40mm dia mild steel rod buried at a depth of 1 metre all around the chimney. Vertical rods shall be of 40 mm dia, 3 metre long mild steel driven deep in to the ground and also connecting to horizontal conductor at 20 metre interval. The chimney earth grid system shall be interconnected with main plant earth grid at minimum 2 points, through bolted removable link and earth pits.
5.06.02	Metallic enclosures of all electrical equipments shall be earthed by two separate and distinct connections to earth grid system. The earth connections shall consist of galvanised steel strip/rod/wire, sized adequately to carry the earth fault current of the system. Two nos. main earthing conductor shall be run inside all along chimney height. Electrical equipments at every platform shall be earthed with this conductor.Cable armour shall be bonded to earthing system at both ends of the circuit. The earthing conductors and accessories located at top 12m level shall have lead cover of minimum 2mm thickness. The accessories like nuts, bolts, dash fasteners, round clamps, washers etc. to be used for top 12m level shall be made of stainless steel.
5.06.03	Steel structures, metallic pipes etc. shall also be connected to earthing system. Connections between earthing conductor and equipments shall be of bolted type only. Earthing conductors along their run on walls shall be supported by cleating at 1 metre interval. Clamps and hardwares shall be of compatible material. Minimum size of earthing conductor shall not be less than 14 SWG G.S wire. Earthing conductor shall also be run along with cable ways / each conduit run.
5.06.04	The contractor shall provide and maintain a temporary earthing system until permanent earthing system is installed.

TECHNICAL SPECIFICATION FOR CHIMNEY(ELECTRICAL)
4X210MW + 3X500MW NTPC KAHALGAON TPP STAGE I & II- FGD

5.07.00	**Lightning Protection System**
5.07.01	Lightning protection system shall conform to IS:2309. It shall comprise vertical air termination, horizontal air termination, down conductor, test links, earth connections and earth electrodes.
5.07.02	Vertical air termination shall extend 3 metre above the top of the chimney. For each flue duct, 3 nos. vertical air terminations shall be provided. Vertical air termination shall be of 20mm dia copper rod with lead cover of 2 mm thickness.
5.07.03	Horizontal air terminations(coronal bond) shall be of minimum 50x6 mm galvanised steel strips provided at following levels. a) Top level of each flue b) Roof top level around outer concrete shell c) Mid height around concrete shell
5.07.04	Horizontal air terminations and vertical air terminations shall be inter connected by down conductors. No. of down conductors shall be minimum 4, equally spaced around and on exterior surface of concrete shell. Down conductors shall be of minimum 50x6 mm galvanised steel strip. Down conductors shall additionally be connected to vertical reinforcement rods at top and bottom of chimney at minimum four locations. Suitable precaution shall be taken at these joint connections to prevent any galvanic action. Reinforcement bars shall be made electrically continuous throughout their height.
5.07.05	Each down conductor shall be provided with a test link at 1 metre above ground level. Each test link shall be enclosed in a galvanised sheet steel enclosure.
5.07.06	Below the test link, direct connection with 40 mm dia mild steel rod shall be made to the earth grid system. Adequate no. of vertical electrodes of 40mm dia mild steel shall be provided to obtain required earth resistance.
5.07.07	Down conductors shall not be connected to other earthing conductors above ground level. To avoid side flashing, metallic structures like hand rails, stairs etc.in the vicinity of down conductor shall be bonded to lightning protection system.
5.07.08	Air terminations, down conductors, coronal band and accessories located at top 12 m level shall have lead cover of 2mm thickness. Suitable bimetallic washers shall be used while connecting conductors of different materials. The accessories like nuts, bolts, dash fasteners, round clamps, washers etc., to be used for top 12 metre level shall be made of stainless steel.
5.07.09	Down conductors and horizontal air terminations shall be cleated to concrete structure at 750 mm interval.

5.07.10	The contractor shall provide and maintain a temporary lightning protection system as per attached tender drawing until permanent lightning protection system is installed.
5.08.00	**Communication system**
5.08.01	Contractor shall provide telephone cable installed in independent G.I. conduits and wired up to junction boxes with telephone socket at 0.0 M and at every internal platform for connection of telephone handset.
5.08.02	Telephone cables shall be of minimum 0.6 mm dia annealed high conductivity electro copper conductor, PVC insulated, twisted, PVC tape wrapped, screened, rip corded, PVC sheathed, conforming to relevant ITD (Indian Telephones Department) specifications.
6.00.00	**INSTALLATION**
6.01.00	Equipments/items shall be installed in a neat workmanner so that it is leveled, plumbed, squared and properly aligned and oriented.
6.02.00	The Contractor shall furnish all supervision, labour, tools, equipment, rigging materials, incidental items such as bolts, wedges, anchors/angles, frames, studs, rawl plugs, concrete inserts etc. required to completely install, test, adjust and fix the equipment.
6.03.00	Manufacturer's drawings, instructions and recommendations shall be correctly followed in handling, erecting, testing and commissioning of all items/equipments and care shall be exercised in handling to avoid distortion to stationary structures, the marring of finish, or damaging of delicate instruments or other electrical parts. All care should be taken to avoid damage of galvanised/painted surfaces during installation. All damaged surfaces of galvanised or ungalvanised faces of steel structures, conduits, junction boxes, trays etc. shall be brushed up and shall be painted with red primer paint followed by two coats of aluminium paint/enamel paint to the satisfaction of Engineer.
6.04.00	Connections between distribution boards, between distribution board and Elevator board/lighting & power panels and between distribution board/power panels & receptacles shall be carried out with FRLS-HRPVC insulated armoured copper / aluminium cables. Connections between lighting panel and lighting fixture/receptacles and for aviation lighting system shall be carried out with PVC insulated copper / aluminium wires laid in galvanised steel conduit.
6.05.00	After installation of lighting fixtures/ receptacles/switch boxes, the panel number and circuit number shall be painted on them at a suitable place.
6.06.00	Wherever non-galvanised steel members/structures are erected, they shall be brushed before giving one coat of lead primer followed by two coats of epoxy

	paint. All nuts, bolts and washers required for complete installation shall be hot dipped galvanised.
6.07.00	Wooden plugs in walls and ceilings for fixing of lighting fixtures and accessories are not acceptable. A suitable fool-proof method (preferably using dash fasteners) for fixing these shall be offered and this shall be subject to Owner's approval.
6.08.00	To distinguish emergency AC fixtures from normal AC fixtures, red painted circular mark of 1 cm. dia. shall be provided on emergency fixtures.
6.09.00	Exposed conduits shall run in straight lines. Conduits shall be fixed by using metallic saddles/clamp secured to suitable nylon rawl plugs with screws or secured to the wall/structure at an interval of not more than 1 metre. Notwithstanding the above in case of couplers or similar fittings, saddles/clamps shall be fixed at a distance of 30 cm from the center of such fittings.
6.10.00	All openings in the floor/wall/ceiling etc, made for conduit installation shall be sealed and made water proof.
6.11.00	For long conduit runs pull out boxes shall be provided at suitable intervals (not exceeding 4 m to facilitate wiring. However pull out boxes need not be provided wherever junction boxes exists in circuit.
6.12.00	The entire metallic conduit system whether embedded or exposed shall be electrically continuous and thoroughly grounded. Where slip joints are used, suitable bonding shall be provided among the joint to ensure a continuous ground circuit. G.I. Pull wire of adequate size shall be laid in all conduits before installation.
6.13.00	Each conduit run shall be marked with its designation as indicated on the drawings. Identifications shall be marked by means of painting so that each run of conduit is readily identified at each end. Where conduits terminate at panels, switch boxes, junction boxes, or other enclosures, the designations shall also be painted on the inside of the enclosure adjacent to the conduits.
6.14.00	Wires shall not be pulled through more than two equivalent 90° bends in a single circuit run. Wherever required, suitable conduit junction boxes/pull boxes shall be provided. All types of wiring, concealed or unconcealed shall be capable of easy inspection.
6.15.00	Receptacles and lighting circuits shall be fed from different circuits. The switch controlling these circuits shall be on the live side (phase wire) of the circuits.
6.16.00	A.C. normal & AC emergency wiring shall run throughout, in separate conduits. Wires of different phases shall run in different conduits
6.17.00	Wiring shall be spliced only at junction boxes. Maximum two wires shall be connected at each terminal. In vertical run of wires, in conduit the wires shall be suitably supported by means of hard rubber plugs, at each pull/junction box.

6.18.00	Cables shall be installed on trays/troughs or cleated to steel work. Cable trays/troughs and supports shall be prefabricated and hot dip galvanised. Cable trays/troughs shall be of ladder/ perforated type constructed of minimum 2mm thick mild steel.
6.19.00	Cable tray/trough supports shall be fixed by bolting in case of concrete structures and by welding in case of steel structures. Cable trays shall be adequately fastened to supports. Cables shall be cleated/clamped with cable tray/trough on vertical runs at every 1 metre interval. Cables laid on horizontal runs shall be secured to trays with nylon cable ties at every 5 metre interval.
6.20.00	Wherever cable passes through floor/wall, pipe sleeves shall be provided and shall be properly sealed after laying cable. No joints shall be allowed in any cable run. Power and control cables shall not be laid together. Cable tags shall be provided on all cables at each end, on both sides of floor/wall crossings and at every 20 metre interval in cable tray runs.
7.00.00	**TESTS**
7.01.00	All equipment to be supplied shall be of type tested quality. The Contractor shall submit for Owner's approval the reports of all type tests as listed below: (A) Distribution boards/panels-Degree of protection tests (B) Aviation lights: (1)Intensity Test (2)Degree of protection test (3)Dust Ingress test The tests must be carried out within last 10 years from date of bid opening on equipment similar to those proposed to be supplied under this contract. The test(s) should have been either conducted at an independent laboratory or should have been witnessed by a client. In case the test report(s) are not found to be meeting NTPC requirements, the Contractor shall conduct all such tests under this contract at no additional cost either at third party laboratory or in presence of Owner's/Client's representative & submit the reports for approval.
7.02.00	All acceptance and routine tests as per the specification and relevant standards shall be carried out. Charges for these shall be deemed to be included in the equipment price.
8.00.00	**MANDATORY SPARES**
8.01.00	A list of Mandatory Spares parts for Aviation Obstruction Lighting System is described below: (1) Power Supply Card - 6 nos.

	(2)	Electronic Flasher Card	-	3 nos.
	(3)	Photocell Control Unit	-	3 sets
	(4)	Spare lamp/tube with holder for Aviation Obstruction Lighting fixture	-	12 nos.

LT POWER CABLES

CLAUSE NO.	TECHNICAL REQUIREMENTS
1.00.00	**CODES & STANDARDS**
1.01.00	All standards, specifications and codes of practice referred to herein shall be the latest editions including all applicable official amendments and revisions as on date of opening of bid. In case of conflict between this specification and those (IS: codes, standards, etc.) referred to herein, the former shall prevail. All the cables shall conform to the requirements of the following standards and codes: IS :1554 - I — PVC insulated (heavy duty) electric cables for working voltages upto and including 1100V. IS : 3961 — Recommended current ratings for cables IS : 3975 — Low carbon galvanised steel wires, formed wires and tapes for armouring of cables. IS : 5831 — PVC insulation and sheath of electrical cables. IS:7098 (Part -I) — Cross linked polyethylene insulated PVC sheathed cables for working voltages upto and including 1100V. IS : 8130 — Conductors for insulated electrical cables and flexible cords. IS : 10418 — Specification for drums for electric cables. IS : 10810 — Methods of tests for cables. ASTM-D -2843 — Standard test method for density of smoke from the burning or decomposition of plastics. IEC-754 (Part-I) — Tests on gases evolved during combustion of electric cables. IEC-332 — Tests on electric cables under fire conditions. Part-3: Tests on bunched wires or cables (Category-B).
2.00.00	**TECHNICAL REQUIREMENTS**
2.01.00	The cables shall be suitable for laying on racks, in ducts, trenches, conduits and under ground buried installation with chances of flooding by water.
2.02.00	All cables including EPR cables shall be flame retardant, low smoke (FRLS) type designed to withstand all mechanical, electrical and thermal stresses developed under steady state and transient operating conditions as specified elsewhere in this specification.

CLAUSE NO.	TECHNICAL REQUIREMENTS
2.03.00	Aluminium conductor used in power cables shall have tensile strength of more than 100 N/ sq.mm. Conductors shall be stranded.
2.04.00	XLPE insulation shall be suitable for a continuous conductor temperature of 90 deg. C and short circuit conductor temperature of 250 deg C. PVC insulation shall be suitable for continuous conductor temperature of 70 deg C and short circuit conductor temperature of 160 deg. C.
2.05.00	The cable cores shall be laid up with fillers between the cores wherever necessary. It shall not stick to insulation and inner sheath. All the cables, other than single core unarmoured cables, shall have distinct extruded PVC inner sheath of black colour as per IS : 5831.
2.06.00	For single core armoured cables, armouring shall be of aluminium wires/ formed wires. For multicore armoured cables, armouring shall be of galvanised steel as follows :

Calculated nominal dia. of cable under armour	Size and Type of armour
Upto 13 mm	1.4mm dia GS wire
Above 13 & upto 25mm	0.8 mm thick GS formed wire / 1.6 mm dia GS wire
Above 25 & upto 40 mm	0.8mm thick GS formed wire / 2.0mm dia GS wire
Above 40 & upto 55mm	1.4 mm thick GS formed wire /2.5mm dia GS wire
Above 55 & upto 70 mm	1.4mm thick GS formed wire / 3.15mm dia GS wire
Above 70mm	1.4 mm thick GS formed wire / 4.0 mm dia GS wire

2.06.01	The aluminium used for armouring shall be of H4 grade as per IS: 8130 with maximum resistivity of 0.028264 ohm mm^2 per meter at 20 deg C. The sizes of aluminium armouring shall be same as indicated above for galvanized steel.
2.06.02	The gap between armour wires / formed wires shall not exceed one armour wire / formed wire space and there shall be no cross over / over-riding of armour wire / formed wire. The minimum area of coverage of armouring shall be 90%. The breaking load of armour joint shall not be less than 95% of that of armour wire / formed wire. Zinc rich paint shall be applied on armour joint surface of G.S.wire/ formed wire.
2.07.00	Outer sheath shall be of PVC as per IS: 5831 & black in colour. In addition to meeting all the requirements of Indian standards referred to, outer sheath of all the cables shall have the following FRLS properties. (a.) Oxygen index of min. 29 (as per IS 10810 Part-58). (b.) Acid gas emission of max. 20% (as per IEC-754-I). (c.) Smoke density rating shall not be more than 60 % (as per ASTMD-2843).
2.08.00	Cores of the cables shall be identified by colouring of insulation. Following colour scheme shall be adopted:

CLAUSE NO.	TECHNICAL REQUIREMENTS
	1 core - Red, Black, Yellow or Blue 2 core - Red & Black 3 core - Red, Yellow & Blue 4 core - Red, Yellow, Blue and Black
2.09.00	For reduced neutral conductors, the core shall be black.
2.10.00	In addition to manufacturer's identification on cables as per IS, following marking shall also be provided over outer sheath. (a.) Cable size and voltage grade - To be embossed (b.) Word 'FRLS' at every 5 metre - To be embossed (c.) Sequential marking of length of the cable in metres at every one metre -To be embossed / printed The embossing shall be progressive, automatic, in line and marking shall be legible and indelible. For EPR cables identification shall be printed on outer sheath.
2.11.00	All cables shall meet the fire resistance requirement as per Category-B of IEC 332 Part-3.
2.12.00	Allowable tolerances on the overall diameter of the cables shall be +\-2 mm maximum, over the declared value in the technical data sheets.
2.13.00	In plant repairs to the cables shall not be accepted. Pimples, fish eye, blow holes etc. are not acceptable.
2.14.00	Cable selection & sizing
2.14.01	Cables shall be sized based on the following considerations: (a) Rated current of the equipment (b) The voltage drop in the cable, during motor starting condition, shall be limited to 10% and during full load running condition, shall be limited to 3% of the rated voltage (c) Short circuit withstand capability This will depend on the feeder type. For a fuse protected circuit, cable should be sized to withstand the letout energy of the fuse. For breaker controlled feeder, cable shall be capable of withstanding the system fault current level for total breaker tripping time inclusive of relay pickup time.
2.14.02	Derating Factors Derating factors for various conditions of installations including the following shall be considered while selecting the cable sizes: a) Variation in ambient temperature for cables laid in air b) Grouping of cables

CLAUSE NO.	TECHNICAL REQUIREMENTS
	c) Variation in ground temperature and soil resistivity for buried cables.
2.14.03	Cable lengths shall be considered in such a way that straight through cable joints are avoided.
2.14.04	All Cables shall be armoured type.
2.14.05	All LT power cables of sizes more than 120 sq.mm. shall be XLPE insulated and sizes shall be 1Cx150, 1Cx300, 1Cx630, 3Cx150 & 3Cx240 sq.mm. However for cable sizes upto 120 sq.mm. both XLPE insulated & PVC insulated LT power cables are acceptable.
2.14.16	Same cable sizes to be used for same type of application & rating of motor i.e if there are three pumps for one application, all three pumps motor should be provided with same cable sizes.
3.00.00	**CONSTRUCTIONAL FEATURES**
3.01.00	1.1 KV Grade Power Cables
	(a) 1.1 KV grade XLPE power cables shall have compacted aluminium conductor, XLPE insulated, PVC inner-sheathed (as applicable), armoured/ unarmoured, PVC outer-sheathed conforming to IS:7098. (Part-I).
	(b) 1.1KV grade PVC power cables shall have aluminium conductor(compacted type for sizes above 10 sq.mm), PVC Insulated, PVC inner sheathed (as applicable) armoured/ unarmoured, PVC outer-sheathed conforming to IS:1554 (Part-I).
	(c) 1.1 KV grade Trailing cables shall have tinned copper(class 5)conductor, insulated with heat resistant elastomeric compound based on Ethylene Propyline Rubber(EPR) suitable for withstanding 90 deg.C continuous conductor temperature and 250deg C during short circuit, inner-sheathed with heat resistant elastomeric compound, nylon cord reinforced, outer-sheathed with heat resistant, oil resistant and flame retardant heavy duty elastomeric compound conforming to IS 9968.
4.00.00	**CABLE DRUMS**
	(a) Cables shall be supplied in non returnable wooden or steel drums of heavy construction. The surface of the drum and the outer most cable layer shall be covered with water proof cover. Both the ends of the cables shall be properly sealed with heat shrinkable PVC/ rubber caps secured by 'U' nails so as to eliminate ingress of water during transportation, storage and erection. Wood preservative anti-termite treatment shall be applied to the entire drum. Wooden drums shall comply with IS: 10418.
	(b) Each drum shall carry manufacturer's name, purchaser's name, address and contract number, item number and type, size and length of cable and net gross weight stencilled on both sides of the drum. A tag containing same information shall be attached to the leading end of the cable. An arrow and suitable accompanying wording shall be marked on one end of the reel indicating the direction in which it should be rolled.
	(c.) The standard drum length of LT power cable with a maximum tolerance of +/- 5% may be decided by the bidder subject to condition that there shall not be any joint in cable, where application length of cable is up to & including 1000 meter for single core cable excluding 630 sq.mm size, and 750 meter for multicore cable & single core 630 sq.mm

CLAUSE NO.	TECHNICAL REQUIREMENTS
5.00.00	**TESTS**

1.0 All equipments to be supplied shall be of type tested design. During detailed engineering, the contractor shall submit for Employer's approval the reports of all the type tests as listed in this specification and carried out within last ten years from the date of bid opening. These reports should be for the test conducted on the equipment similar to those proposed to be supplied under this contract and the test(s) should have been either conducted at an independent laboratory or should have been witnessed by a client.

2.0 However if the contractor is not able to submit report of the type test(s) conducted within last ten years from the date of bid opening, or in the case of type test report(s) are not found to be meeting the specification requirements, the contractor shall conduct all such tests under this contract at no additional cost to the Employer either at third party lab or in presence of client /Employers representative and submit the reports for approval.

3.0 All acceptance and routine tests as per the specification and relevant standards shall be carried out. Charges for these shall be deemed to be included in the equipment price.

4.0 The type test reports once approved for any projects shall be treated as reference. For subsequent projects of NTPC, an endorsement sheet will be furnished by the manufacturer confirming similarity and "No design Change". Minor changes if any shall be highlighted on the endorsement sheet.

5.01.00 **Type Tests**

5.01.01 The reports for the following type tests shall be submitted for one size each of LT XLPE and LT PVC Power cables. Size shall be decided by the employer during detailed engineering:

S.No.	Type test	Remarks
	For Conductor	
1.	Resistance test	
2.	Tensile test	For circular non-compacted conductors only
3.	Wrapping test	For circular non-compacted only
	For Armour Wires/ Formed Wires	
4.	Measurement of Dimensions	
5.	Tensile Test	
6.	Elongation test	
7.	Torsion test	For round wires only
8.	Wrapping test	For aluminium wires / formed wires only.
9.	Resistance test	
10(a)	Mass of zinc coating test	For GS Formed wires/wires only

CLAUSE NO.	TECHNICAL REQUIREMENTS
	10(b) Uniformity of zinc coating — For GS Formed wires /wires only 11. Adhesion test — For GS Formed wires/wires only **For PVC/XLPE insulation & PVC Sheath** 12. Test for thickness 13. Tensile strength & elongation tests — before ageing and after ageing 14. Ageing in air oven 15. Loss of mass test — For PVC insulation and sheath only 16. Hot deformation test — For PVC insulation and sheath only 17. Heat shock test — For PVC insulation and sheath only 18. Shrinkage test 19. Thermal stability test — For PVC insulation and sheath only 20. Hot set test — For XLPE insulation only 21. Water absorption test — For XLPE insulation only 22. Oxygen index test — For outer sheath only 23. Smoke density test — For outer sheath only 24. Acid gas generation test — For outer sheath only **For completed cables** 25. Insulation resistance test (Volume resistivity method) 26. High voltage test 27. Flammability test as per IEC-332 Part-3 (Category-B) Indicative list of tests/checks, Routine and Acceptance tests shall be as per Quality Assurance & Inspection table of LT power cables enclosed.

LT CONTROL CABLES

CLAUSE NO.	TECHNICAL REQUIREMENTS
1.00.00	**CODES & STANDARDS**
1.01.00	All standards, specifications and codes of practice referred to herein shall be the latest editions including all applicable official amendments and revisions as on date of opening of bid. In case of conflict between this specification and those (IS : codes, standards, etc.) referred to herein, the former shall prevail. All the cables shall conform to the requirements of the following standards and codes: IS :1554 - I — PVC insulated (heavy duty) electric cables for working voltages upto and including 1100V. IS : 3961 — Recommended current ratings for cables IS : 3975 — Low carbon galvanised steel wires, formed wires and tapes for armouring of cables. IS : 5831 — PVC insulation and sheath of electrical cables. IS : 8130 — Conductors for insulated electrical cables and flexible cords. IS : 10418 — Specification for drums for electric cables. IS : 10810 — Methods of tests for cables. ASTM-D –2843 — Standard test method for density of smoke from the burning or decomposition of plastics. IEC-754 (Part-I) — Tests on gases evolved during combustion of electric cables. IEC-332 — Tests on electric cables under fire conditions. Part-3: Tests on bunched wires or cables (Category-B).
2.00.00	**TECHNICAL REQUIREMENTS**
2.01.00	The cables shall be suitable for laying on racks, in ducts, trenches, conduits and under ground buried installation with chances of flooding by water.
2.02.00	All cables including EPR cables shall be flame retardant, low smoke (FRLS) type designed to withstand all mechanical, electrical and thermal stresses develop under steady state and transient operating conditions as specified elsewhere in this specification.
2.03.00	Conductor of control cables shall be made of stranded, plain annealed copper.
2.04.00	PVC insulation shall be suitable for continuous conductor temperature of 70 deg C and short circuit conductor temperature of 160 deg. C.
2.05.00	The cable cores shall be laid up with fillers between the cores wherever necessary. It shall not stick to insulation and inner sheath. All the cables, other than single core unarmoured cables, shall have distinct extruded PVC inner sheath of black colour as per IS: 5831.

CLAUSE NO.	TECHNICAL REQUIREMENTS
2.06.00	For multicore armoured cables, the armouring shall be of galvanised steel as follows: Calculated nominal dia of cable under armour — Size and Type of armour Upto 13 mm — 1.4mm dia GS wire Above 13 upto 25 mm — 0.8 mm thick GS formed wire / 1.6 mm dia GS wire Above 25 upto 40 mm — 0.8mm thick GS formed wire / 2.0mm dia GS wire Above 40 upto 55mm — 1.4 mm thick GS formed wire/2.5mm dia GS wire Above 55 upto 70 mm — 1.4mm thick GS formed wire / 3.15mm dia GS wire Above 70mm — 1.4 mm thick GS formed wire / 4.0 mm dia GS wire The gap between armour wires / formed wires shall not exceed one armour wire / formed wire space and there shall be no cross over / over-riding of armour wire / formed wire. The minimum area of coverage of armouring shall be 90%. The breaking load of armour joint shall not be less than 95% of that of armour wire / formed wire. Zinc rich paint shall be applied on armour joint surface.
2.07.00	Outer sheath shall be of PVC as per IS: 5831 and grey in colour. In addition to meeting all the requirements of Indian Standards referred to, outer sheath of all the cables shall have the following FRLS properties. (a.) Oxygen index of min. 29. (As per IS 10810 Part-58) (b.) Acid gas emission of max. 20% (As per IEC-754-I) (c.) Smoke density rating shall not be more than 60% during Smoke Density Test as per ASTMD-2843.
2.08.00	Cores of the cables of upto 5 cores shall be identified by colouring of insulation. Following colour scheme shall be adopted. 1 core - Red, Black, Yellow or Blue 2 core - Red & Black 3 core - Red, Yellow & Blue 4 core - Red, Yellow, Blue and Black 5 core - Red, Yellow, Blue, Black and Grey
2.09.00	For cables having more than 5 cores, core identification shall be done by numbering the insulation of cores sequentially, starting by number 1 in the inner layer (e.g. say for 10 core cable, core numbering shall be from 1 to 10). The number shall be printed in Hindu-Arabic numerals on the outer surfaces of the cores. All the numbers shall be of the same colour, which shall contrast with the colour of insulation. The colour of insulation for all the cores shall be grey only. The numerals shall be legible and indelible. The numbers shall be repeated at regular intervals along the core, consecutive numbers being inverted in relation to each other. When the number is a single numeral, a dash shall be placed

CLAUSE NO.	TECHNICAL REQUIREMENTS
	underneath it. If the number consists of two numerals, these shall be disposed one below the other and a dash placed below the lower numeral. The spacing between consecutive numbers shall not exceed 50 mm.
2.10.00	In addition to manufacturer's identification on cables as per IS, following marking shall also be provided over outer sheath: (a.) Cable size and voltage grade - To be embossed (b.) Word 'FRLS' at every 5 metre - To be embossed (c.) Sequential marking of length of the cable in metres at every one metre - To be embossed / printed. The embossing / printing shall be progressive, automatic, in line and marking shall be legible and indelible. For EPR cables identification shall be printed on outer sheath.
2.11.00	All cables shall meet the fire resistance requirement as per Category-B of IEC-332 Part-3.
2.12.00	Allowable tolerances on the overall diameter of the cables shall be +\-2 mm maximum over the declared value in the technical data sheets.
2.13.00	In plant repairs to the cables shall not be accepted. Pimples, fish eye, blow holes etc. are not acceptable.
2.14.00	Cable selection & sizing Control cables shall be sized based on the following considerations: (a) The minimum conductor cross-section shall be 1.5 sq.mm. (b) The minimum number of spare cores in control cables shall be as follows: No. of cores in cable — Min. No. of spare cores 2C, 3C — NIL 5C — 1 7C-12C — 2 14C & above — 3
2.14.01	Cable lengths shall be considered in such a way that straight through cable joints are avoided.
2.14.02	All Cables shall be armoured type.
3.00.00	**CONSTRUCTIONAL FEATURES**
3.01.00	1.1 KV Grade Control Cables shall have stranded copper conductor and shall be multicore PVC insulated, PVC inner sheathed, armoured / unarmoured, FRLS PVC outer sheathed conforming to IS: 1554. (Part-I).
3.02.00	1.1 KV grade Trailing cables shall have tinned copper(class 5)conductor, insulated with heat resistant elastomeric compound based on Ethylene Propyline Rubber(EPR) suitable for withstanding 90 deg.C continuous conductor temperature and 250deg C during short circuit, inner-sheathed with heat resistant elastomeric compound, nylon cord reinforced, outer-sheathed with heat resistant, oil resistant and flame retardant heavy duty elastomeric compound conforming to IS 9968. Minimum conductor size shall be 2.5 sqmm.

CLAUSE NO.	TECHNICAL REQUIREMENTS
4.00.00	**CABLE DRUMS** (a.) Cables shall be supplied in non returnable wooden or steel drums of heavy construction. The surface of the drum and the outer most cable layer shall be covered with water proof cover. Both the ends of the cables shall be properly sealed with heat shrinkable PVC/ rubber caps secured by 'U' nails so as to eliminate ingress of water during transportation, storage and erection. Wood preservative anti-termite treatment shall be applied to the entire drum. Wooden drums shall comply with IS: 10418. (b.) Each drum shall carry manufacturer's name, purchaser's name, address and contract number, item number and type, size and length of cable and net gross weight stenciled on both the sides of the drum. A tag containing same information shall be attached to the leading end of the cable. An arrow and suitable accompanying wording shall be marked on one end of the reel indicating the direction in which it should be rolled. (c.) The standard drum length for control cables with a maximum tolerance of +/- 5% may be decided by the bidder subject to condition that there shall not be any joint in cable, where application length of cable is up to & including 1000 meter.
5.00.00	**TESTS** All equipments to be supplied shall be of type tested design. During detailed engineering, the contractor shall submit for Employer's approval the reports of all the type tests as listed in this specification and carried out within last ten years from the date of bid opening. These reports should be for the test conducted on the equipment similar to those proposed to be supplied under this contract and the test(s) should have been either conducted at an independent laboratory or should have been witnessed by a client. However if the contractor is not able to submit report of the type test(s) conducted within last ten years from the date of bid opening, or in the case of type test report(s) are not found to be meeting the specification requirements, the contractor shall conduct all such tests under this contract at no additional cost to the Employer either at third party lab or in presence of client /Employers representative and submit the reports for approval. All acceptance and routine tests as per the specification and relevant standards shall be carried out. Charges for these shall be deemed to be included in the equipment price The type test reports once approved for any projects shall be treated as reference. For subsequent projects of NTPC, an endorsement sheet will be furnished by the manufacturer confirming similarity and "No design Change". Minor changes if any shall be highlighted on the endorsement sheet.
5.01.00	**TYPE TESTS**
5.01.01	The reports for the following type tests shall be submitted for one size of control cables. Size shall be decided by the employer during detailed engineering

CLAUSE NO.	TECHNICAL REQUIREMENTS

S. No.	Type Test	Remarks
	For Conductor	
1.	Resistance test	
	For Armour Wires / Formed Wires (If applicable)	
2.	Measurement of Dimensions	
3.	Tensile Test	
4.	Elongation test	
5.	Torsion test	For round wire only
6.	Wrapping test	For aluminium wires / formed wires only.
7.	Resistance test	
8(a).	Mass of zinc Coating test	For GS wires/formed wires only
8(b).	Uniformity of zinc coating	For GS wires/formed wires only
9.	Adhesion test	For GS wires/formed wires only
	For PVC insulation & PVC Sheath	
10.	Test for thickness	
11.	Tensile strength and elongation test	before ageing and after ageing
12.	Ageing in air oven	
13.	Loss of mass test	For PVC insulation and sheath only
14.	Hot deformation test	For PVC insulation and sheath only
15.	Heat shock test	For PVC insulation and sheath only
16.	Shrinkage test	
17.	Thermal stability test	For PVC insulation and sheath only
18.	Oxygen index test	For outer sheath only
19.	Smoke density test	For outer sheath only

CLAUSE NO.	TECHNICAL REQUIREMENTS
	S. No. — **Type Test** — **Remarks** 20. Acid gas generation test — For outer sheath only **For completed cables** 21. Insulation resistance test(Volume resistivity method) 22. High voltage test 23. Flammability test as per IEC-332 Part-3 (Category-B)
5.02.00	Indicative list of tests/checks, Routine and Acceptance tests shall be as per Quality Assurance & Inspection table of Control Cables enclosed.

CABLING EARTHING & LIGHTNING PROTECTION

CLAUSE NO.	TECHNICAL REQUIREMENTS
1.00.00	**CODES AND STANDARDS**
1.01.00	All standards, specifications and codes of practice referred to herein shall be the latest editions including all applicable official amendments and revisions as on date of opening of bid. In case of conflict between this specification and those (IS codes, standards, etc.) referred to herein, the former shall prevail. All work shall be carried out as per the following standards/ codes as applicable .

IS:513	Cold rolled low carbon steel sheets and strips.
IS:802	Code of practice for the use of Structural Steel in Overhead Transmission Line Towers.
IS:1079	Hot Rolled carbon steel sheet & strips
IS:1239	Mild steel tubes, tubulars and other wrought steel fIttings
IS:1255	Code of practice for installation and maintenance of power cables upto and including 33 KV rating
IS:1367 Part-13	Technical supply conditions for threaded Steel fasteners. (Hot dip galvanized coatings on threaded fasteners).
IS:2147	Degree of protection provided by enclosures for low voltage switchgear and control gear
IS:2309	Code of Practice for the protection of building and allied structures against lightning.
IS:2629	Recommended practice for hot dip galvanising of iron & steel
IS:2633	Method for testing uniformity of coating on zinc coated articles.
IS:3043	Code of practice for Earthing
IS:3063	Fasteners single coil rectangular section spring washers.
IS:6745	Methods for determination of mass of zinc coating on zinc coated iron & steel articles.
IS:8308	Compression type tubular in- line connectors for aluminium conductors of insulated cables
IS:8309	Compression type tubular terminal ends for aluminium conductors of insulated cables.
IS:9537	Conduits for electrical installation.
IS:9595	Metal - arc welding of carbon and carbon manganese steels - recommendations.
IS:13573	Joints and terminations for polymeric cables.
BS:476	Fire tests on building materials and structures
IEEE:80	IEEE guide for safety in AC substation grounding

CLAUSE NO.	TECHNICAL REQUIREMENTS
	IEEE:142 — Grounding of Industrial & commercial power systems DIN 46267 (Part-II) — Non tension proof compression joints for Aluminium conductors. DIN 46329 — Cable lugs for compression connections, ring type ,for Aluminium conductors BS:6121 — Specification for mechanical Cable glands for elastomers and plastic insulated cables. Indian Electricity Act. Indian Electricity Rules.
1.02.00	Equipment complying with other internationally accepted standards such as IEC, BS, DIN, USA, VDE, NEMA etc. will also be considered if they ensure performance and constructional features equivalent or superior to standards listed above. In such a case, the Bidder shall clearly indicate the standard(s) adopted, furnish a copy in English of the latest revision of the standards alongwith copies of all official amendments and revisions in force as on date of opening of bid and shall clearly bring out the salient features for comparison.
2.00.00	**DESIGN AND CONSTRUCTIONAL FEATURE**
2.01.00	**Inter Plant Cabling**
2.01.01	Interplant cabling for main routes shall be laid along overhead trestles/duct banks. Cables from main plant to switchyard control room shall be laid in overhead trestles or duct bank. In case of Duct banks, pull-pits shall be filled with sand and provided with a PCC covering. Directly buried cables, if essential, shall not have concentration of more than 4 cables in one route. Cables crossing Railway line (if applicable) shall be laid underground through nearest culvert. Necessary statutory clearance if required shall be taken by Bidder. All HT,LT and control cable shall be armoured.
2.01.02	**Transformer yard** In transformer yard cables shall be laid in overhead trestle. The main cable routes coming out from Main plant building and crossing the Transformer yard shall be laid in overhead trestles. In transformer yard, trestle height for rail/road crossing shall be suitable for movement of Generator Transformer with bushing.
2.01.03	**Trenches** PCC flooring of built up trenches shall be sloped for effective drainage with sump pits and sump pumps.
2.01.04	No sub zero level cable vault/trenches shall be provided below control building/switchgear rooms in main plant.
2.01.05	**Cable Vault** The cable vault/ / cable spreader room space below the HT / LT switchgear room, Control Rooms, unit control equipment room, Programmer room, UPS, Charger & Battery Rooms, shall have **800 mm wide** and 2.1 m high movement passage all around the cable trays in the cable vault/ cable spreader room for easy laying/maintenance of cables Cable vaults shall be provided with adequate drainage facilities for drainage of fire water.

CLAUSE NO.	TECHNICAL REQUIREMENTS
	Each cable vault should have at least two doors. Exit signs shall be provided near doors for personnel escape in case of emergency
2.01.06	**Boiler Area** Cable trays in boiler & ESP area shall be supported from the boiler and ESP structures. The same shall be coordinated with SG/ESP contractor. Cable trays in these areas shall be in vertical formation to avoid dust accumulation. No cable trenches shall be provided in boiler/ESP area.
2.01.07	Two separate cable routes shall be provided for cable routing of working and standby drives or different set/group (say 50% capacity) of auxiliaries.
2.01.08	**OffSite Area** For feeder in bidder's scope for offsite areas, overhead cable tray arrangement shall be followed. However cable trenches/slit may also be acceptable, for some areas, if found to be required during detailed engineering. Cable trenches provided shall be separated from fuel oil area to avoid oil accumulation.
2.01.09	The cable slits to be used for motor/equipment power/control supply shall be sand filled & covered with PCC after cabling.
2.01.10	Sizing criteria, derating factors for the cables shall be met as per respective chapters. However for the power cables, the minimum conductor size shall be 6 sq.mm. for aluminium conductor and 2.5 sq.mm. for copper conductor cable.
2.01.11	Conscious exceptions to the above guidelines may be accepted under special conditions but suitable measures should be taken at such location to: • Meet all safety requirements • Safeguard against fire hazards, mechanical damage, flooding of water, oil accumulation, electrical faults/interferences, etc
3.00.00	**EQUIPMENT DESCRIPTION**
3.01.00	**Cable trays, Fittings & Accessories**
3.01.01	Cable trays shall be ladder/perforated type as specified complete with matching fittings (like brackets, elbows, bends, reducers, tees, crosses, etc.) accessories (like side coupler plates, etc. and hardware (like bolts, nuts, washers, G.I. strap, hook etc.) as required. Cable tray shall be ladder type for power & control cables and perforated for instrumentation cables.
3.01.02	Cable trays, fittings and accessories shall be fabricated out of rolled mild steel sheets free from flaws such as laminations, rolling marks, pitting etc. These (including hardware) shall be hot dip galvanized as per Clause No. 3.13.00 of this chapter.
3.01.03	Cable trays shall have standard width of 150 mm, 300 mm & 600 mm and standard lengths of 2.5 metre. Thickness of mild steel sheets used for fabrication of cable trays and fittings shall be 2 mm. The thickness of side coupler plates shall be 3 mm.
3.01.04	Cable troughs shall be required for branching out few cables from main cable route. These shall be U-shaped, fabricated of mild steel sheets of thickness 2 mm and shall be hot dip

CLAUSE NO.	TECHNICAL REQUIREMENTS
	galvanised as per Clause No. 3.13.00 of this chapter. Troughs shall be standard width of 50 mm & 75 mm with depth of 25 mm.
3.01.05	The tolerance for cable tray and accessories shall be as per IS 2102 (Part-1). Tolerance Class: - Coarse
3.02.00	**Support System for Cable Trays**
3.02.01	Cable tray support system shall be pre-fabricated out of single sheet as per enclosed tender drawings.
3.02.02	Support system for cable trays shall essentially comprise of the two components i.e. main support channel and cantilever arms. The main support channel shall be of two types : (i) C1:- having provision of supporting cable trays on one side and (ii) C2:-having provision of supporting cable trays on both sides. The support system shall be the type described hereunder a. Cable supporting steel work for cable racks/cables shall comprise of various channel sections, cantilever arms, various brackets, clamps, floor plates, all hardwares such as lock washers, hexagon nuts, hexagon head bolt, support hooks, stud nuts, hexagon head screw, channel nut, channel nut with springs, fixing studs, etc. b. The system shall be designed such that it allows easy assembly at site by using bolting. All cable supporting steel work, hardwares fitings and accessories shall be prefabricated factory galvanised. c. The main support and cantilever arms shall be fixed at site using necessary brackets, clamps, fittings, bolts, nuts and other hardware etc. to form various arrangements required to support the cable trays. Welding of the components shall not be allowed. However, welding of the bracket (to which the main support channel is bolted) to the overhead beams, structural steel, insert plates or reinforcement bars will be permitted. Any cutting or welding of the galvansied surface shall be brushed and red lead primer, oil primer & aluminium paint shall be applied d. All steel components, accessories, fittings and hardware shall be hot dip galvanised after completing welding, cutting, drilling and other machining operation. e. The typical arrangement of flexible support system is shown in the enclosed drawings and described briefly below: The main support channel and cantilever arms shall be fabricated out of 2.5 thick rolled steel sheet conforming to IS 1079. f. Cantilever arms of 320 mm, 620mm and 750 mm in length are required, and shall be as shown in the enclosed drawing. The arm portion shall be suitable for assembling the complete arm assembly on to component constructed of standard channel section. The back plate shall allow sufficient clearance for fixing bolt to be tightened with tray in position. g. Support system shall be able to withstand • weight of the cable trays • weight of the cables (75 Kg/Metre run of each cable tray) • Concentrated load of 75 Kg between every support span. • Factor of safety of minimum 1.5 shall be considered.

CLAUSE NO.	TECHNICAL REQUIREMENTS
3.02.03	The size of structural steel members or thickness of sheet steel of main support channel and cantilever arms and other accessories as indicated above or in the enclosed drawings are indicative only. Nevertheless, the support system shall be designed by the bidder to fully meet the requirements of type tests as specified. In case the system fails in the tests, the components design modification shall be done by the Bidder without any additional cost to the Employer. The bidder shall submit the detailed drawings of the system offered by him alongwith the bid.
3.02.04	Four legged structure shall be provided wherever there is change in elevation and change in direction
3.02.05	FOR COAL HANDLING PLANT/**FGD PLANT AREA** THE FOLLOWING SHALL ALSO BE APPLICABLE**:** a) All overhead cable routes shall be along the route of the conveyor gallery on separate supporting structures and cables shall be laid in vertical trays. The bottom of the steel shall be such that the existing facilities, movement of trucks/human beings etc. does not get affected. The cable trestle shall have a minimum 600mm clear walk way and shall have maintenance platforms as required. The bottom of the steel supporting structure shall be generally at 3.0M above the grade level except for rail/road crossings where it shall be at 8.0M above grade level. Tap offs from the overhead cable trestle can be through shallow trenches with prior approval of the Employer. Directly buried cable, if essential, shall not have concentration of more than 4 cables on one route. b) Cable trenches shall be provided only in Switchgear/MCC rooms. c) Cables shall not be routed through the conveyor galleries except for the equipment located in the conveyor galleries for a particular conveyor i.e. protection switches, receptacles etc. d) Cables for PCS and BSS shall be routed along the conveyors through GI conduits.
3.03.00	**Pipes, Fittings & Accessories**
3.03.01	Pipes offered shall be complete with fittings and accessories (like tees, elbows, bends, check nuts, bushings, reducers, enlargers, coupling caps, nipples etc.) The size of the pipe shall be selected on the basis of maximum 40% fill criteria
3.03.02	GI Pipes shall be of medium duty as per IS: 1239
3.03.03	Duct banks shall be High Density PE pipes encased in PCC (10% spare of each size, subject to minimum one) with suitable water-proof manholes.
3.03.04	Hume pipes shall be NP3 type as per IS 458.
3.03.05	TERNE Coated Flexible Steel Conduits shall be water proof and rust proof made of heat resistant lead coated steel. Conduit diameter shall be uniform throughout its length. Internal surface of the conduit shall be free from burrs and sharp edges. Conduits shall be complete with necessary accessories for proper termination of the conduit with junction boxes and lighting fixtures
3.03.06	HDPE pipes and conduits shall be PE-80, PN-10 type as per IS 4984/IS 8008 part-I.

CLAUSE NO.	TECHNICAL REQUIREMENTS
3.04.00	**Junction Boxes**
3.04.01	Junction box shall be made of Fire retardant material. Material of JB shall be Thermoplastic or thermosetting or FRP type. The box shall be provided with the terminal blocks, mounting bracket and screws etc. The cable entry shall be through galvanized steel conduits of suitable diameter. The JB shall have suitable for installing glands of suitable size on the bottom of the box. The JB shall be suitable for surface mounting on ceiling/structures. The JB shall be of grey color RAL 7035. All the metal parts shall be corrosion protected. Junction box surface should be such that it is free from crazings, blisterings, wrinkling, colour blots/striations. There should not be any mending or repair of surface. JB's will be provided with captive screws so that screws don't fall off when cover is opened. JB's mounting brackets should be of powder coated MS. Type test reports for the following tests shall be furnished:- (a) Impact resistance for impact energy of 2 Joules (IK07)as per BS EN50102 (b) Thermal ageing at 70deg C for 96 hours as per IEC60068-2-2Bb. (c) Class of protection shall be IP 55. (d) HV test.
3.04.02	Terminal blocks shall be 1100V grade, of suitable current rating, made up of unbreakable polyamide 6.6 grade. The terminals shall be screw type or screw-less (spring loaded) / cage clamp type with lugs. Marking on terminal strips shall correspond to the terminal numbering in wiring diagrams. All metal parts shall be of non-ferrous material. In case of screw type terminals the screw shall be captive, preferably with screw locking design. All terminal blocks shall be suitable for terminating on each side the required cables/wire size. All internal wiring shall be of cu. Conductor PVC wire.
3.05.00	**Terminations & Straight Through Joints**
3.05.01	Termination and jointing kits for 33kV, 11 kV, 6.6 KV and 3.3 kV grade XLPE insulated cables shall be of proven design and make which have already been extensively used and type tested. Termination kits and jointing kits shall be Pre-moulded type or heat shrinkable type. Further Cold shrinkable type termination and jointing kits are also acceptable. The Cold shrinkable type kits shall be type tested as per relevant standards. Calculation to withstand the required fault level shall also be furnished in case of cold shrinkable type kits. 33 kV, 11 kV, 6.6 KV and 3.3kV grade joints and terminations shall be type tested and Type test reports as per IS:13573 Part-II and IEC60502 shall be furnished. Also, heat shrink material shall comply with requirements of ESI 09-13 (external tests). Critical components used in cable accessories shall be of tested and proven quality as per relevant product specification/ESI specification. Cable joints and terminations should be with FRLS properties as per IEC 60754-1&2. Kit contents shall be supplied from the same source as were used for type testing. The kit shall be complete with the tinned copper solderless crimping type cable lugs & ferrule or mechanical connectors (wherein bolts are tightened that shear off at an appropriate torque) as per DIN standard suitable for aluminium compacted conductor cables. (Tender drg. no 0000-211-POE –A-51-RA of cable lug attached at the end of this chapter).
3.05.02	Straight through joint and termination shall be capable of withstanding the fault level of 21 KA for 0.12 Sec. with dynamic peak of 52 KA for 33 KV system & of 40 kA for 0.12 sec with a dynamic peak of 100 kA for 11 kV, 6.6 KV & 3.3 KV system. Straight through joints shall have provisions for shield connection and earthing wherever required and complete with all accessories and consumables suitable for storage without deterioration at a temperature of 50 deg. C with shelf life of more than five years. 1.1 kV grade straight through joints shall also be of proven design

CLAUSE NO.	TECHNICAL REQUIREMENTS
3.05.03	1.1 KV grade Straight Through Joint shall be of proven design.
3.06.00	**Cable glands**
3.06.01	Cable shall be terminated using double compression type cable glands. Testing requirements of Cable glands shall conform to BS:6121 and gland shall be of robust construction capable of clamping cable and cable armour (for armoured cables) firmly without injury to insulation. Cable glands shall be made of heavy duty brass machine finished and nickel chrome plated. Thickness of plating shall not be less than 10 micron. All washers and hardware shall also be made of brass with nickel chrome plating Rubber components shall be of neoprene or better synthetic material and of tested quality. Cable glands shall be suitable for the sizes of cable supplied/erected.
3.07.00	**Cable lugs/ferrules**
3.07.01	Cable lugs/ferrules for power cables shall be tinned copper solderless crimping type suitable for aluminium compacted conductor cables. Cable lugs and ferrules for control cables shall be tinned copper type. The cable lugs for control cables shall be provided with insulating sleeve and shall suit the type of terminals provided on the equipments. Cable lugs and ferrule shall conform to IS/DIN standards.
3.08.00	**Trefoil clamps**
3.08.01	Trefoil clamps for single core cables shall be pressure die cast aluminum or fibre glass or nylon and shall include necessary fixing accessories like G.I. nuts, bolts, washers, etc. Trefoil clamps shall have adequate mechanical strength, when installed at 1 mtr intervals, to withstand the forces generated by the peak value of maximum system short circuit current.
3.09.00	**Cable Clamps & Ties**
3.09.01	The cable clamps/ties required to clamp multicore cables shall be of SS-316 material, 12mm wide, polyster coated ladder lock type. The clamps/ties shall have self locking arrangement & shall have sufficient strength. The cable clamps/ties shall be supplied in finished individual pieces of suitable length to meet the site requirements.
3.10.00	**Receptacles**
3.10.01	Receptacles boxes shall be fabricated out of MS sheet of 2mm thickness and hot dipped gavanised or of die-cast aluminium alloy of thickness not less than 2.5 mm. The boxes shall be provided with two nos. earthing terminals, gasket to achieve IP55 degree of protection, terminal blocks for loop-in loop-out for cable of specified sizes, mounting brackets suitable for surface mounting on wall/column/structure, gland plate etc. The ON-OFF switch shall be rotary type heavy duty, double break,AC23 category, suitable for AC supply. Plug and Socket shall be shrouded Die-cast aluminium. Socket shall be provided with lid safety cover. Robust mechanical interlock shall be provided such that the switch can be put ON only when the plug is fully engaged and plug can be withdrawn only when the switch is in OFF position. Also cover can be opened only when the switch is in OFF position. Wiring shall be carried out with 1100 V grade PVC insulated stranded aluminium/copper wire of adequate size. The Terminal blocks shall be of 1100 V grade. The Terminal blocks shall be of 1100 V grade made up of unbreakable polymide 6.6 grade with adequate current rating and size. The welding receptacles shall be provided with RCCB/RCD of 30mA sensitivity having facility for manual testing/checking of operation of RCCB/RCD.
3.11.00	**Cable Drum Lifting Jack**
	The jack for cable drum lifting shall be of screw type with 10 ton capacity. The cable drum jacks shall be manufactured from fabricated steel. The spindles supplied with the cable drum jack shall be manufactured using BSEN-24 grade steel bar with locking collars. Jack

CLAUSE NO.	TECHNICAL REQUIREMENTS
	nests shall be of SG cast steel. Cable drum jack supplied shall have undergone load testing and reports for the same shall be submitted. At least Two Nos. of jacks shall be supplied for NTPC use. Contractor has to make arrangements for his own jacks for cable reeling/unreeling under his scope of installation.
3.12.00	**Galvanising**
3.12.01	Galvanising of steel components and accessories shall conform to IS:2629 , IS4759 & IS:2633. Additionally galvanising shall be uniform, clean smooth, continuous and free from acid spots.
3.12.02	The amount of zinc deposit over threaded portion of bolts, nuts, screws and washers shall be as per IS:1367 . The removal of extra zinc on threaded portion of components shall be carefully done to ensure that the threads shall have the required zinc coating on them as specified
3.13.00	**Welding**
3.13.01	The welding shall be carried out in accordance with IS:9595. All welding procedures and welders qualification shall also be followed strictly in line with IS:9595
4.00.00	**INSTALLATION**
4.01.00	**Cable tray and Support System Installation**
4.01.01	Cables shall run in cable trays mounted horizontally or vertically on cable tray support system which in turn shall be supported from floor, ceiling, overhead structures, trestles, pipe racks, trenches or other building structures.
4.01.02	Horizontally running cable trays shall be clamped by bolting to cantilever arms and vertically running cable trays shall be bolted to main support channel by suitable bracket/clamps on both top and bottom side rails at an interval of 2000 mm in general. For vertical cable risers/shafts cable trays shall be supported at an interval of 1000mm in general. Fixing of cable trays to cantilever arms or main support channel by welding shall not be accepted. Cable tray installation shall generally be carried out as per the approved guidelines/ drawings. Vendor shall design the support system along with tray, spacing etc in line with tray loadings/drawings.
4.01.03	The cantilever arms shall be positioned on the main support channel with a minimum vertical spacing of 300 mm unless otherwise indicated.
4.01.04	The contractor shall fix the brackets/ clamps/ insert plates using anchor fasteners. Minimum size of anchor fasteners shall be M 8 X 50 and material shall be stainless steel grade 316 or better. Anchor fastener shall be fixed as recommended by manufacturer and as approved by site engineer. For brick wall suitable anchor fasteners shall be used as per the recommendations of manufacturer. Make of anchor fasteners subject to QA approval and the same shall be finalized at pre-award stage.
4.01.05	All cable way sections shall have identification, designations as per cable way layout drawings and painted/stenciled at each end of cable way and where there is a branch connection to another cable way. Minimum height of letter shall be not less than 75 mm. For long lengths of trays, the identification shall be painted at every 10 meter. Risers shall additionally be painted/stenciled with identification numbers at every floor.
4.01.06	In certain cases it may be necessary to site fabricate portions of trays, supports and other non standard bends where the normal prefabricated trays, supports and accessories may not be suitable. Fabricated sections of trays, supports and accessories to make the

CLAUSE NO.	TECHNICAL REQUIREMENTS
	installation complete at site shall be neat in appearance and shall match with the prefabricated sections in the dimensions. They shall be applied with one coat of red lead primer, one coat of oil primer followed by two finishing coats of aluminium paint.
4.02.00	**Conduits/Pipes/Ducts Installation**
4.02.01	The Contractor shall ensure for properly embedding conduit pipe sleeves wherever necessary for cabling work. All openings in the floor/roof/wall / cable tunnel/cable trenches made for conduit installation shall be sealed and made water proof by the Contractor.
4.02.02	GI pull wire of adequate size shall be laid in all conduits before installation. Metallic conduit runs at termination shall have two lock nuts wherever required for junction boxes etc.
4.02.03	Conduit runs/sleeves shall be provided with PVC bushings having round edge at each end. All conduits/pipes shall have their ends closed by caps until cables are pulled. After cables are pulled, the ends of conduits/pipes shall be sealed with Glass wool/Cement Mortar/Putty to prevent entrance of moisture and foreign material
4.02.04	Exposed conduit/pipe shall be adequately supported by racks, clamps, straps or by other approved means. Conduits /pipe support shall be installed square and true to line and grade with an average spacing between the supports as given below, unless specified otherwise

Conduit /pipe size (dia).	**Spacing**
Upto 40 mm	1 M
50 mm	2.0 M
65-85 mm	2.5 M
100 mm and above	3.0 M

4.02.05	For bending of conduits, bending machine shall be arranged at site by the contractor to facilitate cold bending. The bends formed shall be smooth.
4.03.00	**Junction Boxes Installation**
4.03.01	Junction boxes shall be mounted at a height of 1200mm above floor level or as specified in the drawings and shall be adequately supported/mounted on masonry wall by means of anchor fasteners/ expandable bolts or shall be mounted on an angle, plate or other structural supports fixed to floor, wall, ceiling or equipment foundations.
4.04.00	**Cable Installation**
4.04.01	Cable installation shall be carried out as per IS:1255 and other applicable standards.
4.04.02	For Cable unloading, pulling etc following guidelines shall be followed in general:

a) Cable drums shall be unloaded, handled and stored in an approved manner on hard and well drained surface so that they may not sink. In no case shall be drum be stored flat i.e. with flange horizontal. Rolling of drums shall be avoided as far as possible. For short distances, the drums may be rolled provided they are rolled slowly and in proper direction as marked on the drum. In absence of any indication, the drums may be rolled in the same direction as it was rolled during taking up the cables. For unreeling the cable, the drum shall be mounted on suitable jacks or on cable wheels and shall be rolled slowly so that cable comes out over the drum and not from below. All possible care shall be taken during unreeling and laying to avoid

CLAUSE NO.	TECHNICAL REQUIREMENTS
	damage due to twist, kink or sharp bends. Cable ends shall be provided with sealed plastic caps to prevent damage and ingress of moisture. b) While laying cable, ground rollers shall be used at every 2 meter interval to avoid cable touching ground. The cables shall be pushed over the rollers by a gang of people positioned in between the rollers. Cables shall not be pulled from the end without having intermediate pushing arrangements. Pulling tension shall not exceed the values recommended by cable manufacturer. Selection of cable drums for each run shall be so planned so as to avoid using straight through joints. Care should be taken while laying the cables so as to avoid damage to cables. If any particular cable is damaged, the same shall be repaired or changed to the satisfaction of Project Manager.
4.04.03	Cables shall be laid on cable trays strictly in line with cable schedule
4.04.04	Power and control cables shall be laid on separate tiers inline with the approved guidelines/drawings. The laying of different voltage grade cables shall be on different tiers according to the voltage grade of the cables. In horizontal tray stacks, H.T. cables shall be laid on top most tier and cables of subsequent lower voltage grades on lower tiers of trays. Single core cable in trefoil formation shall be laid with a distance of four times the diameter of cable between trefoil center lines and clamped at every two metre. All multicore cables shall be laid in touching formation. Power and control cables shall be secured fixed to trays/support with cable clamps/ties with self locking arrangement. For horizontal trays arrangements, multicore power cables and control cables shall be secured at every five meter interval. For vertical tray arrangement, individual multicore power cables and control cables shall be secured at every one meter. After completion of cable laying work in the particular vertical tray, all the control cables shall be binded to trays/supports by cable clamps/ties with self locking arrangement at every five meter interval and at every bend. Fibre Optical cable shall be laid in trenches/trays or as decided by Employer.
4.04.05	Bending radii for cables shall be as per manufacturer's recommendations and IS:1255.
4.04.06	Where cables cross roads/rail tracks, the cables shall be laid in hume pipe/ HDPE pipe.
4.04.07	No joints shall be allowed in trip circuits, protection circuits and CT/PT circuits. Also joints in critical equipment in main plant area shall not be permitted. Vendor shall identify and accordingly procure the cable drum length.
4.04.08	In each cable run some extra length shall be kept at suitable point to enable one LT/two HT straight through joints to made, should the cable develop fault at a later stage. Control cable termination inside equipment enclosure shall have sufficient lengths so that shifting of termination in terminal blocks can be done without requiring any splicing.
4.04.09	Wherever few cables are branching out from main trunk route troughs shall be used.
4.04.10	Wind loading shall be considered for designing support as well Cable trays wherever required.
4.04.11	Where there is a considerable risk of steam, hot oil or mechanical damage cable routes shall be protected by barriers or enclosures.
4.04.12	The installation work shall be carried out in a neat workman like manner & areas of work shall be cleaned of all scraps, water, etc. after the completion of work in each area every day. Contractor shall replace RCC/Steel trench covers after the Installation work in that particular area is completed or when further work is not likely to be taken up for some time.

CLAUSE NO.	TECHNICAL REQUIREMENTS
4.04.13	**Separation** At least 300mm clearance shall be provided between: - HT power & LT power cables, - LT power & LT control/instrumentation cables,
4.04.14	**Segregation** 1) Segregation means physical isolation to prevent fire jumping. 2) All cables associated with the unit shall be segregated from cables of other units. 3) Interplant cables of station auxiliaries and unit critical drives shall be segregated in such a way that not more than half of the drives are lost in case of single incident of fire. Power and control cables for AC drives and corresponding emergency AC or DC drives shall be laid in segregated routes. Cable routes for one set of auxiliaries of same unit shall be segregated from the other set. 4) In switchyard, control cables of each bay shall be laid on separate racks/trays.
4.04.15	Minimum number of spare cores required to be left for interconnection in control cables shall be as follows: Minimum number of spare cores required to be left for interconnection in control cables shall be as follows: No. of cores in cable — No. of spare cores 2C,3C — NIL 5C — 1 7C-10C — 2 14C and above — 3
4.04.16	**Directly Buried Cables** a) Cable trenches shall be constructed for directly buried cables. Construction of cable trench for cables shall include excavation, preparation of sieved sand bedding, riddled soil cover, supply and installation of brick or concrete protective covers, back filling and compacting, supply and installation of route markers and joint markers. Laying of cables and providing protective covering shall be as per IS:1255 and the enclosed drawings showing cabling details. b) RCC cable route and RCC joint markers shall be provided wherever required. The voltage grade of the higher voltage cables in route shall be engraved on the marker. Location of underground cable joints shall be indicated with cable marker with an additional inscription "Cable Joint". The marker shall project 150 mm above ground and shall be spaced at an interval of 30 meters and at every change in direction. They shall be located on both sides of road crossings and drain crossings. Top of cable marker/joint marker shall be sloped to avoid accumulation of water/dust on marker.
4.04.17	Cable tags shall be provided on all cables at each end (just before entering the equipment enclosure), on both sides of a wall or floor crossing, on each duct/conduit entry, and at

CLAUSE NO.	TECHNICAL REQUIREMENTS
	every 20 meters in cable tray/trench runs. Cable tags shall also be provided inside the switchgear, motor control centers, control and relay panels etc. where a number of cables enter together through a gland plate. Cable tag shall be of rectangular shape for power cables and control cables. Cable tag shall be of 2 mm thick aluminum with number punched on it and securely attached to the cable by not less than two turns of 20 SWG GI wire conforming to IS:280. Alternatively, the Contractor may also provide cable tags made of nylon, cable marking ties with cable number heat stamped on the cable tags. The cable tag requirements mentioned above shall prevail over Tag requirements mentioned elsewhere in this document for HT power, LT power & control cables.
4.04.18	While crossing the floors, unarmoured cables shall be protected in conduits upto a height of 500 mm from floor level if not laid in tray.
4.05.00	**Cable Terminations & Connections**
4.05.01	The termination and connection of cables shall be done strictly in accordance with cable termination kit manufacturer'' instructions, drawings and/or as directed by Project Manager. Cable jointer shall be qualified to carryout satisfactory cable jointing/termination. Contractor shall furnish for review documentary evidence/experience reports of the jointers to be deployed at site.
4.05.02	Work shall include all clamps, fittings etc. and clamping, fitting, fixing, plumbing, soldering, drilling, cutting, taping, preparation of cable end, crimping of lug, insulated sleeving over control cable lugs, heat shrinking (where applicable), connecting to cable terminal, shorting and grounding as required to complete the job to the satisfaction of the Project Manager.
4.05.03	The equipment will be generally provided with undrilled gland plates for cables/conduit entry. The Contractor shall be responsible for punching of gland plates, painting and touching up. Holes shall not be made by gas cutting. The holes shall be true in shape. All cable entry points shall be sealed and made vermin and dust proof. Unused openings shall be effectively sealed by 2mm thick aluminium sheets.
4.05.04	Control cable cores entering control panel/switchgear/MCC/miscellaneous panels shall be neatly bunched, clamped and tied with self locking type nylon cable ties with de interlocking facility to keep them in position.
4.05.05	All the cores of the control cable to be terminated shall have identification by providing ferrules at either end of the core, each ferrule shall be indelible, printed single tube ferrule and shall include the complete wire number and TB number as per the drawings. The ferrule shall fit tightly on the core. Spare cores shall have similar ferrules with suffix sp1, sp2, ---etc along with cable numbers and coiled up after end sealing.
4.05.06	All cable terminations shall be appropriately tightened to ensure secure and reliable connections.
5.00.00	**EARTHING SYSTEM**
5.01.00	Earthing system shall be in strict accordance with IS:3043 and Indian Electricity Rules/Acts The earthing system shall be designed for a life expectancy of at least forty (40) years, for a system fault current of 50 kA for 1.0 sec. The minimum rate of corrosion of steel for selection of earthing conductor shall be 0.12mm per year.

CLAUSE NO.	TECHNICAL REQUIREMENTS

Earthing system network/earthmat shall be interconnected mesh of mild steel rods buried in ground in the plant. All areas under contractor scope of supply shall be interconnected together by minimum two parallel conductors. The Contractor shall furnish the detailed design and calculations for Employer's approval. Contractor shall obtain all necessary statutory approvals for the system. All the columns shall be earthed by nearby risers and earthmat grid spacing shall be minimum 10 mts. Minimum two nos of risers shall be provided for each equipment in SG area. Separate dedicated riser shall be provided for C&I earthing purpose and also for Lightning down conductor connection purpose. Sufficient nos of risers near the equipment shall be provided as per the system requirement.

5.02.00 The earth conductors shall be free from pitting, laminations, rust, scale and other electrical, mechanical defects

5.03.00 The material of the earthing conductors shall be as follows:

1)	Conductors above ground level and in built up trenches.	-	Galvanized steel
2)	Conductors buried in earth	-	Mild steel
3)	Earth electrodes	-	Mild steel rod

5.04.00 The sizes of earthing conductors for various electrical equipments shall be as below:

	Equipment	Earth conductor buried in earth	Earth conductor above ground level & in built-up trenches
a)	Main earth grid	Min 40 mm dia. MS rod or as per actual calculation whichever is more	65 x 8mm GS flat
b)	33kV/11kV/6.6kV/3.3 kV/ switchgear equipment and 415V switchgear	---	65 x 8mm GS flat
c)	415 V MCC/ Distribution boards / Transformers	---	50 x 6mm GS flat
d)	LT Motors above 125 KW	---	50 x 6mm GS flat
	25 KW to 125 KW	---	25 x 6mm GS flat
	1KW to 25 KW	---	25 x 3mm GS flat
	Fractional House power motor	---	8 SWG GS wire
e)	Control panel & control desk	---	25 x 3 mm GS flat
f)	Push button station / Junction Box	---	8 SWG GI wire
g)	Columns, structures, cable trays and bus ducts enclosures	---	50 x 6mm GS flat

CLAUSE NO.	TECHNICAL REQUIREMENTS
	h) Crane, rails, rail tracks & other non-current carrying metal parts — 25 x 6mm GS flat
5.05.00	Metallic frame of all electrical equipment shall be earthed by two separate and distinct connections to earthing system, each of 100% capacity, Crane rails, tracks, metal pipes and conduits shall also be effectively earthed at two points. Steel RCC columns, metallic stairs, and rails etc. of the building housing electrical equipment shall be connected to the nearby earthing grid conductor by one earthing ensured by bonding the different sections of hand rails and metallic stairs. Metallic sheaths/screens, and armour of multi-core cables shall be earthed at both ends. Metallic Sheaths and armour of single core cables shall be earthed at switchgear end only unless otherwise approved. Every alternate post of the switchyard fence shall be connected to earthing grid by one GS flat and gates by flexible lead to the earthed post. Railway tracks within the plant area shall be bonded across fish plates and connected to earthing grid at several locations. Portable tools, appliances and welding equipment shall be earthed by flexible insulated cable.
5.06.00	Each continuous laid lengths of cable tray shall be earthed at minimum two places by G.S. flats to earthing system, the distance between earthing points shall not exceed 30 meter. Wherever earth mat is not available, necessary connections shall be done by driving an earth electrode in the ground
5.07.00	Neutral points of HT transformer shall be earthed through NG resistors. The Contractor shall connect the NGR earthing point to earth electrodes by suitable earth conductors.
5.08.00	Neutral connections and metallic conduits/pipes shall not be used for the equipment earthing. Lightning protection system down conductors shall not be connected to other earthing conductors above the ground level.
5.09.00	Connections between earth leads and equipment shall normally be of bolted type. Contact surfaces shall be thoroughly cleaned before connections. Equipment bolted connections after being tested and checked shall be painted with anti corrosive paint/compound.
5.10.00	Suitable earth risers as approved shall be provided above finished floor/ground level, if the equipment is not available at the time of laying of main earth conductor.
5.11.00	Connections between equipment earthing leads and between main earthing conductors shall be of welded type. For rust protection the welds should be treated with red lead compound and afterwards thickly coated with bitumen compound. All welded connections shall be made by electric arc welding.
5.12.00	Resistance of the joint shall not be more than the resistance of the equivalent length of conductors.
5.13.00	Earthing conductors buried in ground shall be laid minimum 600 mm below grade level unless otherwise indicated in the drawing. Back filling material to be placed over buried conductors shall be free from stones and harmful mixtures. Back filling shall be placed in layers of 150 mm.
5.14.00	Earthing conductors embedded in the concrete floor of the building shall have approximately 50 mm concrete cover.
5.15.00	A minimum earth coverage of 300 mm shall be provided between earth conductor and the bottom of trench/foundation/underground pipes at crossings. Earthing conductors crossings the road can be installed in pipes. Wherever earthing conductor crosses or runs at less than 300 mm distance along metallic structures such as gas, water, steam pipe lines, steel reinforcement in concrete, it shall be bonded to the same.

CLAUSE NO.	TECHNICAL REQUIREMENTS
5.16.00	Earthing conductors along their run on columns, walls, etc. shall be supported by suitable welding / cleating at interval of 1000mm and 750mm respectively.
5.17.00	Earth pit shall be of treated type & shall be constructed as per IS:3043. Electrodes shall be embedded below permanent moisture level. Minimum spacing between electrodes shall be 600mm. Earth pits shall be treated with salt and charcoal as per IS:3043. Test links shall be provided with bolted arrangement alongwith each earth pit, in order to facilitate measurement of earth resistance as & when required.
5.18.00	On completion of installation continuity of earth conductors and efficiency of all bonds and joints shall be checked. Earth resistance at earth terminations shall be measured and recorded. All equipment required for testing shall be furnished by contractor.
5.19.00	Earthing conductor shall be buried at least 2000mm outside the fence of electrical installations. Every alternate post of the fences and all gates shall be connected to earthing grid by one lead.
5.20.00	Other Requirements of Earthing System:
	Standard/Code — IEEE 80, IS 3043
	Earthing System
	Life expectancy — 40 Years
	System Fault Level — System Fault Level 50 KA for 1 sec
	Soil resistivity — Actual as per site conditions.
	Min. Steel corrosion — 0.12mm/year
	Depth of burial of main earth conductor — 600mm below grade level; where it crosses trenches, pipes, ducts, tunnels, rail tracks, etc., it shall be at least 300mm below them.
	Conductor joints — By electric arc welding, with resistance of joint not more than that of the conductor.
	Welds to be treated with red lead for rust protection and then coated with bitumen compound for corrosion protection.
	Surface resistivity - Gravel — 3000 ohm-meter
	- Concrete — 500 ohm-meter
6.00.00	**LIGHTNING PROTECTION SYSTEM**
6.01.01	Lightning protection system shall be in strict accordance with IEC : 62305 and latest IS standards.
6.01.02	Lightning conductor shall be of 25x6mm GS strip when used above ground level and shall be connected through test link with earth electrode/earthing system
6.01.03	Lightning system shall comprise of air terminations, down conductors, test links, earth electrode etc. as per approved drawings.

CLAUSE NO.	TECHNICAL REQUIREMENTS
6.02.00	**Down Conductors** 1. Down conductors shall be as short and straight as practicable and shall follow a direct path to earth electrode. 2. Each down conductor shall be provided with a test link at 1000 mm above ground level for testing but it shall be in accessible to interference. No connections other than the one direct to an earth electrode shall be made below a test point. 3. All joints in the down conductors shall be welded type. 4. Down conductors shall be cleated on outer side of building wall, at 750 mm interval or welded to outside building columns at 1000 mm interval. 5. Lightning conductor on roof shall not be directly cleated on surface of roof. Supporting blocks of PCC/insulating compound shall be used for conductor fixing at an interval of 1500 mm. 6. All metallic structures within a vicinity of two meters of the conductors shall be bonded to conductors of lightning protection system. 7. Lightning conductors shall not pass through or run inside GI Conduits. 8. Testing link shall be made of galvanized steel of size 25x 6mm. 9. Pulser system for lightning shall not be accepted. 10. Hazardous areas handling inflammable/explosive materials and associated storage areas shall be protected by a system of aerial earths.
7.00.00	**TESTS**
7.01.01	All equipment to be supplied shall be of type tested design. During detail engineering, the contractor shall submit for Employer's approval the reports of all the type tests as listed in this specification and carried out within last ten years from the date of bid opening. These reports should be for the test conducted on the equipment similar to those proposed to be supplied under this contract and the test(s) should have been either conducted at an independent laboratory or should have been witnessed by a client.
7.01.02	However if the contractor is not able to submit report of the type test(s) conducted within last ten years from the date of bid opening, or in the case of type test report(s) are not found to be meeting the specification requirements, the contractor shall conduct all such tests under this contract at no additional cost to the Employer either at third party lab or in presence of client/Employers representative and submit the reports for approval.
7.01.03	All acceptance and routine tests as per the specification and relevant standards shall be carried out. Charges for these shall be deemed to be included in the equipment price.
7.01.04	The type test reports once approved for any projects shall be treated as reference. For subsequent projects of NTPC, an endorsement sheet will be furnished by the manufacturer confirming similarity and “No design Change”. Minor changes if any shall be highlighted on the endorsement sheet.
7.02.00	**Type Test reports shall be furnished for the following**
7.02.01	Type tests on Cable Trays support system

CLAUSE NO.	TECHNICAL REQUIREMENTS
	a) **Test 1A:** On main support channel type-C2 for cantilever arms fixed on one side only. A 3.5 meter length of main support channel shall be fixed vertically at each end to a rigid structure as per the fixing arrangement as shown in the enclosed drawing. Eight (8) nos. 750 mm cantilever arms shall be fixed to the main channel and each arm shall be loaded over the outboard 600 mm with a uniform working load of 100 kg. Subsequently a point load of 100 kg shall be applied on arm 2. A uniform proof load on all the arms equal to twice the working load shall be then be applied. Deflections shall be measured at the points shown in the enclosed drawings and at the following load intervals: i) Working load ii) Working load + point load iii) Off load iv) Proof load + point load v) Off load The deflection measured at working loads shall not exceed 16mm. The permanent deflection after removing the combination of working load and point load shall not exceed 10 mm at the arm tips and 6 mm on the channel. No collapse of the structure shall occur with a combination of proof load and point load applied. B) **Test 1B:** Test 1A shall be repeated with Eight Cantilever arms uniformly loaded and with the same point load on arm 2 **Test 2: On Main support channel type -C2 for cantilever arms fixed on both sides** **a) Test 2A:** A 3.5 m length of main support channel C2 for cantilever arms fixing on both sides shall be fixed at each end to rigid structure as per the fixing arrangement as shown in the enclosed drawing. Six (6), 750 mm cantilever arms shall be attached to each sides and each arm uniformly loaded to a working load of 100 kg over the out board 600 mm. A point load of 100 kg shall than be applied to arm 2, followed by a uniform proof load of twice the working load on all the arms; deflection shall be measured at points shown in the enclosed drawings at the following load intervals. i) Working load ii) Working load + Point load iii) Off load iv) Proof load + Point load v) Off load The deflection measured at working loads shall not exceed 16mm. The permanent deflection after removing the combination of working load and point load shall not exceed 10 mm at the arm tips and 6 mm on the channel. No collapse of the structure shall occur with a combination of proof load and point load applied

CLAUSE NO.	TECHNICAL REQUIREMENTS

b) Test 2 B: The test 2 A shall be repeated with the assembly but with an asymmetrical load on the C2 column and point load applied to arm 8. The 100 kg and 200 kg uniformly distributed loads shall be applied to the upper three arms on one side and the lower three arms on the opposite side.

Test 3 : **Tests on Channel Fixed on Beam/Floor**

A length of main support channel section shall be fixed to steel structure/floor and have loads applied as shown in the drawing enclosed and as detailed below

a) Test 3A : A length of steel structure shall be rigidly supported. It should be fitted on a meter length of channel section using beam clamps welded/bolted. A point load of 1200 kg shall be applied to the centre point via two brackets. No distortion or pulling of the components shall take place.

b) Test 3B: With the components assembled as in Test 3A, two perpendicular point loads of 600 kg shall be simultaneously applied at positions 150 mm either side of the centre line, no distortion or pulling of the components shall take place.

c) Test 3C: With the components assembled as in Test 3A, a perpendicular point load shall be applied at a point 150 mm on one side of the centre line.

The load shall be gradually increased to the maximum value that can be applied without causing distortion or pulling of the components. This value shall be recorded.

Test 4 : Channel Insert Test

A 2.5 m length of C1 channel fixed to the concrete wall/ steel structure as per actual site installation conditions. 6 nos. of 750 mm cantilever arms shall be attached to C1 channel as shown in enclosed drawing. Each arm uniformly loaded to a working load of 100 kg over the out board 600 mm. A point load of 100 kg shall than be applied to arm 2, followed by a uniform proof load of twice the working load on all the arms; deflection shall be measured at points shown in the enclosed drawings at the following load intervals.

i) Working Load

ii) Working Load + Point Load

iii) Off Load

iv) Proof Load + Point Load

v) Off load

The deflection measured at working loads shall not exceed 16mm. The permanent deflection after removing the combination of working load and point load shall not exceed 10 mm at the arm tips and 6 mm on the channel. No collapse of the structure shall occur with a combination of proof load and point load applied

Test 5 : Channel nut slip characteristics (what ever applicable)

Tests 5A1,5A2,5A3 : A length of channel C1 section 200mm long shall have fitted bracket with the two bolt fixing as shown in drawing enclosed.

CLAUSE NO.	TECHNICAL REQUIREMENTS
	With loads applied at the position shown in drawing enclosed nut slip shall be determined with bolt torque of 30NM, 50 NM and 65 NM No fewer than three measurements shall be made for each torque setting. A minimum loading of 720 kg shall be obtained before nut slip with bolt torque of 65 NM. **Tests 5B1,5B2,5B3:** The length of channel C1 section 200 mm long shall have fitted bracket with the one bolt fixing as shown in drawing enclosed. With loads applied at the position shown in drawing, nut slip shall be determined with bolt torques of 30 NM, 50 NM and 65 NM. No fewer than three measurements shall be made for each torque setting. A minimum loading of 350 kg shall be obtained before nut slip with a bolt torque of 65 NM. **Test 6 Weld Integrity Test** After deflection test as per test 1A, 1B, 2, 3 & 4 weld integrity shall be checked by magnetic particle inspection to detect sub-surface cracks developed, if any.
7.02.02	Cable termination kit and straight through joints should have been tested as per IS:13573 for 3.3kV grade & above.
7.03.00	**Routine/ Acceptance Tests**
7.03.01	Routine Tests a) Routine tests as per specification and applicable standards shall be carried out on all requirements/items covered in the specification. b) Physical & dimensional check on all equipments as per approved drawings/standards c) HV/IR as applicable. d) Check/measurement of thickness of paint/zinc coating/nickel-chrome plating as per specification & applicable standard.
7.03.02	Acceptance Test a) Galvanising Tests as per applicable standards b) Welding checks c) Deflection tests on cable trays: d) One piece each of 2.5m length of cable tray of 300mm & above shall be taken as sample from each offered lot. It shall be supported at both end & loaded with uniform load of 76 kg/meter along the length of cable tray. The maximum deflection at the mid-span of each size shall not exceed 7mm. d) Proof load tests on cable tray support system

CLAUSE NO.	TECHNICAL REQUIREMENTS
	i) Tests on Main Support Channel shall be done if only C1 Channel are in scope of supply and cantilever arms shall be fitted on one side. This test shall be same as test 4 of type test. ii) Test on Main Support Channel shall be done with C2 channel and cantilever arms fitted on both sides, if C2 channels are in scope of supply. This test shall be same as test 2A of type test. Then test (i) above shall not be done. iii) Nut slip characteristic test (it shall support minimum load of 350kg before nut slips with a bolt torque of 65 NM). This test shall be same as test 5B3 of type test. The procedure for carrying out tests at "d" above shall be as per details given in Type Tests in specification thereafter Die-Penetration test shall be carried out to check weld integrity. e) The above acceptance tests shall be done only on one sample from each offered lot.
8.00.00	**COMMISSIONING**
8.01.01	The Contractor shall carry out the following commissioning tests and checks after installation at site. In addition the Contractor shall carry out all other checks and tests as recommended by the Manufacturers or else required for satisfactory performance..
8.01.02	**Cables** a) Check for physical damage b) Check for insulation resistance before and after termination/jointing. c) HT cables shall be pressure tested (test voltage as per IS:7098) before commissioning. d) Check of continuity of all cores of the cables. e) Check for correctness of all connections as per relevant wiring diagrams. Any minor modification to the panel wiring like removing/inserting, shorting, change in terminal connections, etc., shall be carried out by the Contractor. f) Check for correct polarity and phasing of cable connections. g) Check for proper earth connections for cable glands, cable boxes, cable armour, screens, etc. h) Check for provision of correct cable tags, core ferrules, tightness of connections.
8.02.00	**Cable trays / supports and accessories** 1) Check for proper galvanizing/painting and identification number of the cable trays/supports and accessories. 2) Check for continuity of cable trays over the entire route. 3) Check that all sharp corners, burrs, and waste materials have been removed from the trays supports.

CLAUSE NO.	TECHNICAL REQUIREMENTS
	4) Check for earth continuity and earth connection of cable trays.
8.03.00	**Earthing and Lightning protection system** 1) Earth continuity checks. 2) Earth resistance of the complete system as well as sub-system.
9.00.00	**ELECTRICAL LAYOUT PHILOSOPHY**: While developing the layout the bidder must give due consideration to the following requirements: a) Adequate distance shall be maintained between the transformers. As basic guidelines following norms will be adhered to: 1) Transformers shall be separated from the adjacent building/structures and from each other by a minimum distance as defined below or by a fire wall of two hours of fire resisting of height at least 600 mm above bushing / pressure relief vent whichever is higher. Oil capacity of individual transformer (in liters) — Clear separating distance (in meters) 5,000 to 10,000 — 8.0 10,001 to 20,000 — 10.0 20,001 to 30,000 — 12.5 Over 30,001 — 15.0 2) In case of auxiliary transformers having an aggregate oil capacity in excess of 2300 liters but individual oil capacity of less than 5000 liters, the maximum separating distance between transformers and surrounding building shall be at least 6M unless they are separated by fire separating walls or are protected by high velocity spray system. 3.) Rail track shall be provided in Transformer yard for movement of each transformer. The rail track in Transformer yard shall be connected with TG area rail track The Foundation top of transformer & rail top shall be at EL +/- 0.0M. Bus duct support or Transformer body shall be at least 8.0M from A-Row of TG building to clear the movement of GT/ Stator/UT/ST/UAT on rail line. Jacking pads shall be provided where the rail track changes the direction. Mooring post shall be provided on rail track for handling the transformers. 4) For each transformer a pit shall be provided all around at a distance of 1.5 m (minimum) from transformer outer edge. A sump pit shall be provided for each pit. A common oil retention pit per unit shall be provided to hold oil quantity of the largest transformer (by volume) & 10 minutes of water quantity of HVW spray system for the largest transformer. Sump pit of individual transformer shall be connected to common oil retention pit of that unit. 5) Rail track shall be provided for all outdoor transformers up to road for movement of each transformer of size more than or equal to 7.5MVA Transformer. Jacking pads shall be provided where the rail track changes the direction. Jacking pad

CLAUSE NO.	TECHNICAL REQUIREMENTS

shall also be provided at the location of installation of transformer and mooring post shall be provided on rail track for handling the transformers.

6.) The Transformer fencing shall be at 1.0 M (minimum) distance from the pit wall. The Height of fencing shall be 2.5 M (minimum) and fencing shall have personal entry gate and removable type fencing/gate for transformer withdrawal.

7) The transformer firewall, pit sizing and clearances from adjacent building/structures etc. shall be as per IS 1646/CBIP manual on Transformer

8) However, for all outdoor transformers of oil capacity less than 2000 litre, a trench of suitable size shall be provided all around at a distance of 1.0 m (minimum) from transformer outer edge. A sump pit shall be provided for each trench.

b) Layout requirements for Electrical MCC/switchgear rooms

1. Separate Switchgear Rooms shall be provided for each unit. For TG building, all HT boards shall be provided in HT switchgear room at only one floor and all LT boards shall be provided in LT switchgear room at only one floor

2. The following clearances shall be maintained for HT Switchboard.

a.) Front Clearance

i) For one Row of Swgr. - 2.0 M (Min)

ii) For two Rows of Swgr. - 2.5 M (Min)

b.) Back Clearance - 1.5 M (Min.)

c.) Side Clearance

Min. 800 mm, however provision to be made for any additional panel in future at both ends. Therefore end clearance shall be 800+width of panel (including spare panels/dummy panels etc.)

3. The following clearances shall be maintained for LT Switchboard.

a.) Front Clearance

i) For one Row of Swgr - 1.5M (Min)
ii) For two Rows of Swgr - 1.5/1.75M depending upon the depth of panels etc

b.) Back Clearance
i) For single front - 1.0M (Min)
ii) For double front - 1.5M (Min)

c.) Side Clearance

Min. 800 mm, however provision to be made for any additional panel in future at both ends. Therefore end clearance shall be 800 mm + width of panel.

For offsite areas, HT Switchboard clearances shall be followed wherever both LT & HT switch boards are in the same MCC room.

CLAUSE NO.	TECHNICAL REQUIREMENTS
	4. Height of HT/LT Switchgear Room and Boiler MCC room i) With Bus Duct – 4.5 m (min) ii) Without Bus Duct – 4.0 m (min) Further no vertical bracings shall be envisaged in HT/LT switchgear room and associated cable vault area. **5**. Cable trench/Cable vault For LT switchgear/MCC room at EL 0.0M, minimum 1400 wide x 1400 deep cable trench shall be provided to route the cables. Horizontal cable trays shall be routed in cable trenches. c) Minimum clear working space around the equipment 1200mm d) In buildings having MCC, minimum 2 fire door along with one rolling shutter of adequate size/capacity shall be provided. e) The cable entry and exit from switchgear room shall be from 1.5 mtr (minimum) above FGL.

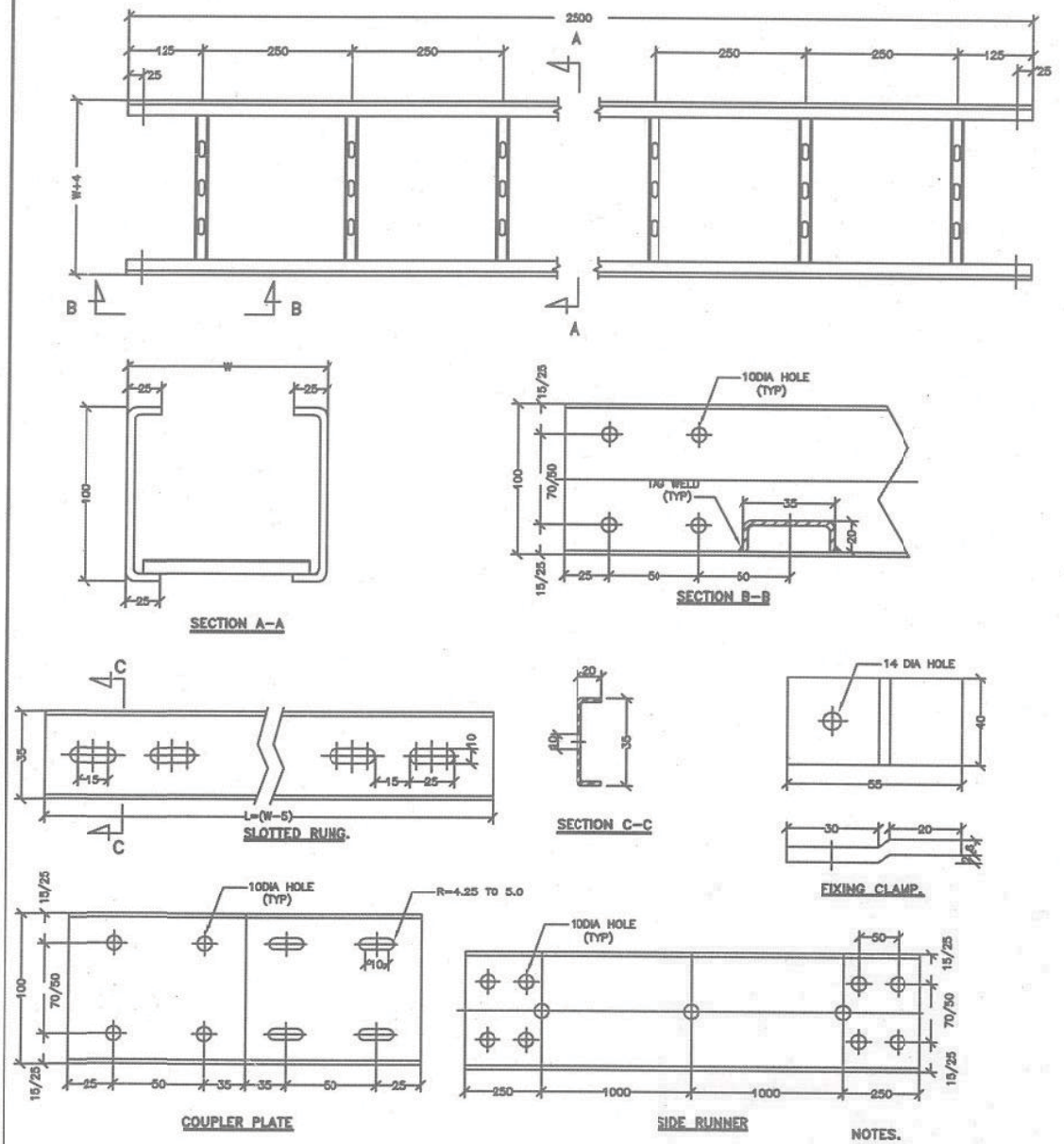

NOTES.

1. ALL DIMENSIONS ARE IN mm.
2. MATERIAL:-2mm THICK. MS SHEET.
3. FINISH :-HOT DIP GALVANISED
4. THICKNESS:-3mm COUPLER PLATE, 2mm TRAY.
5. TOLERANCE:-AS PER RELEVANT I.S.

This drawing and the design it covers are the property of NTPC LTD. and must not be copied, loaned or exhibited either in part or in whole without written permission. Any contravention is liable for prosecution.

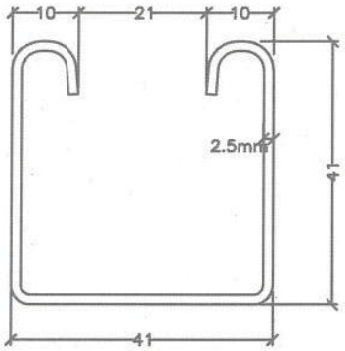

SINGLE CHANNEL–TYPE C1

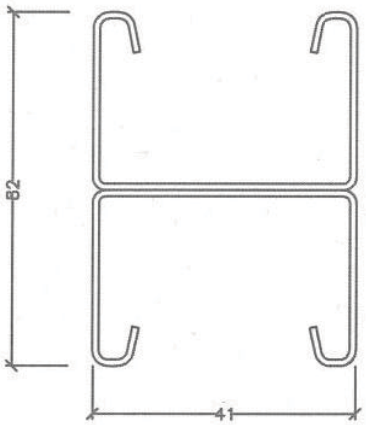

TWO LENGTHS OF C1 WELDED BACK TO BACK

DOUBLE CHANNEL–TYPE C2

NOTES.
1. ALL DIMENSIONS ARE IN mm.
2. MATERIAL :– 2.5mm. THICK MS SHEET.
3. TOLERANCE :–AS PER RELEVANT I.S.
4. FINISH :–HOT DIP GALVANISED

This drawing and the design it covers are the property of NTPC LTD. and must not be copied, loaned or exhibited either in part or in whole without written permission. Any contravention is liable for prosecution.

This drawing and the design it covers are the property of NTPC LTD. and must not be copied, loaned or exhibited either in part or in whole without written permission. Any contravention is liable for prosecution.

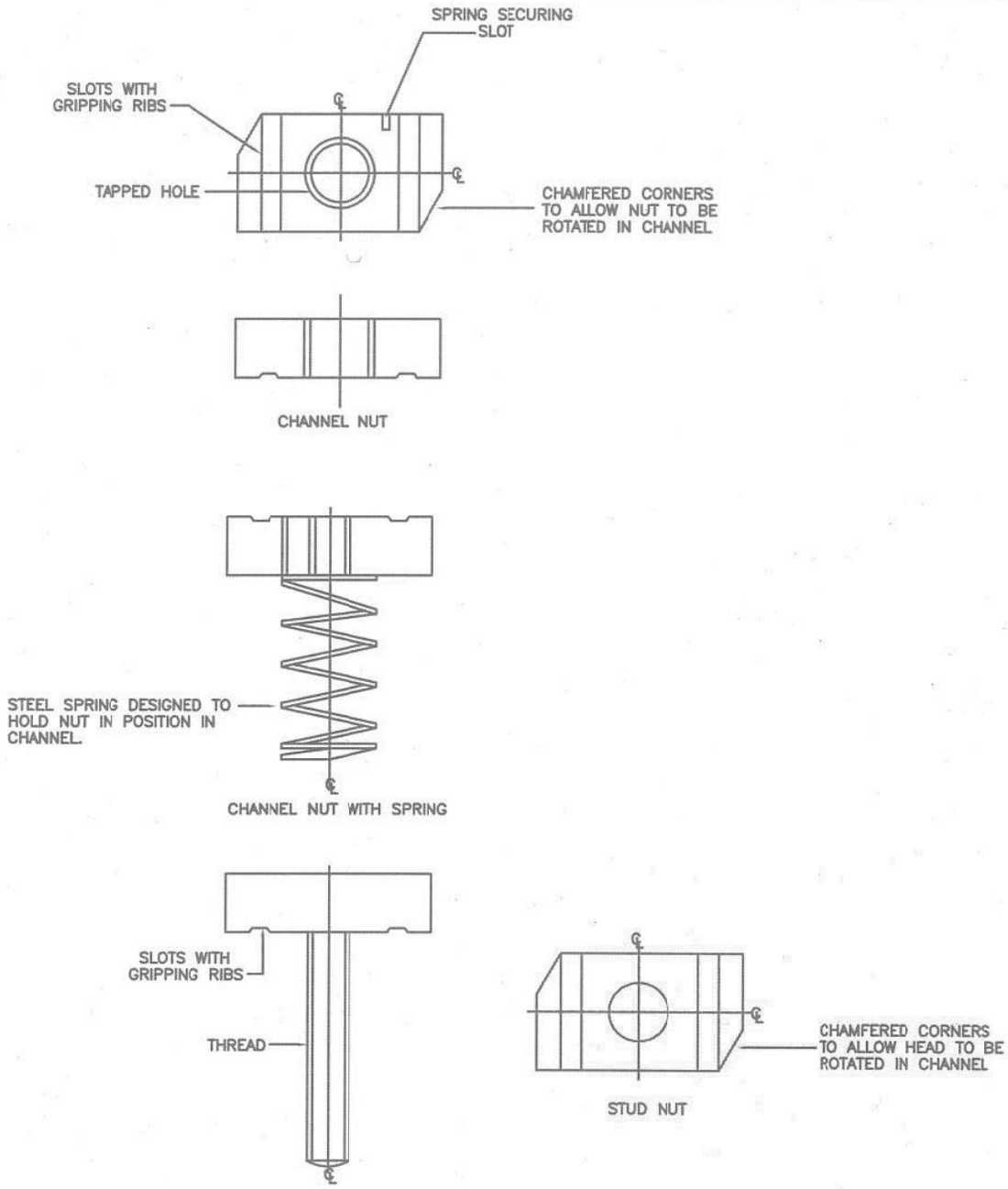

TYPICAL DETAILS OF FIXING ACCESSORIES

NOTES.
1. MATERIAL :- MILD STEEL
2. FINISH :-HOT DIP GALVANISED

TRAY1A-211-014

This drawing and the design it covers are the property of NTPC LTD. and must not be copied, loaned or exhibited either in part or in whole without written permission. Any contravention is liable for prosecution.

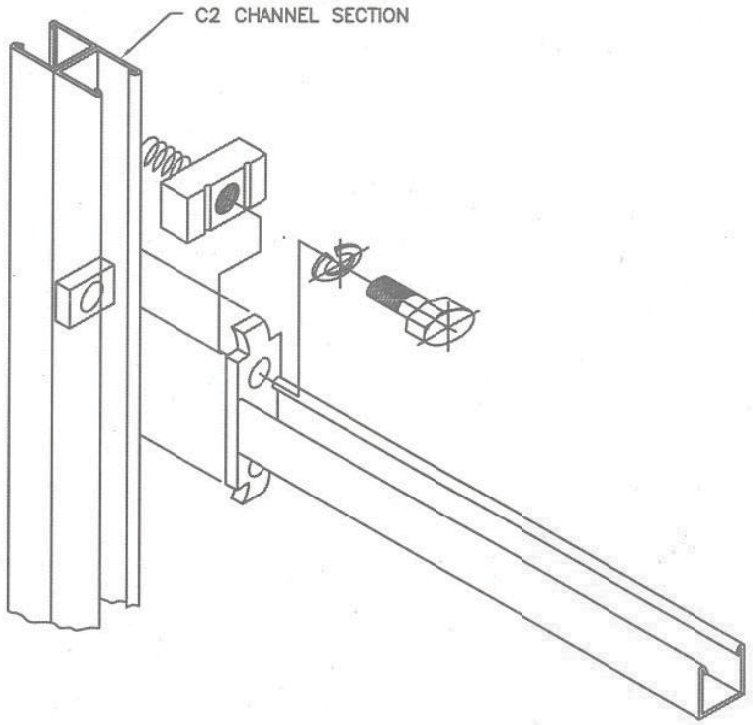

NOTE.

1. FINISH :-HOT DIP GALVANISED

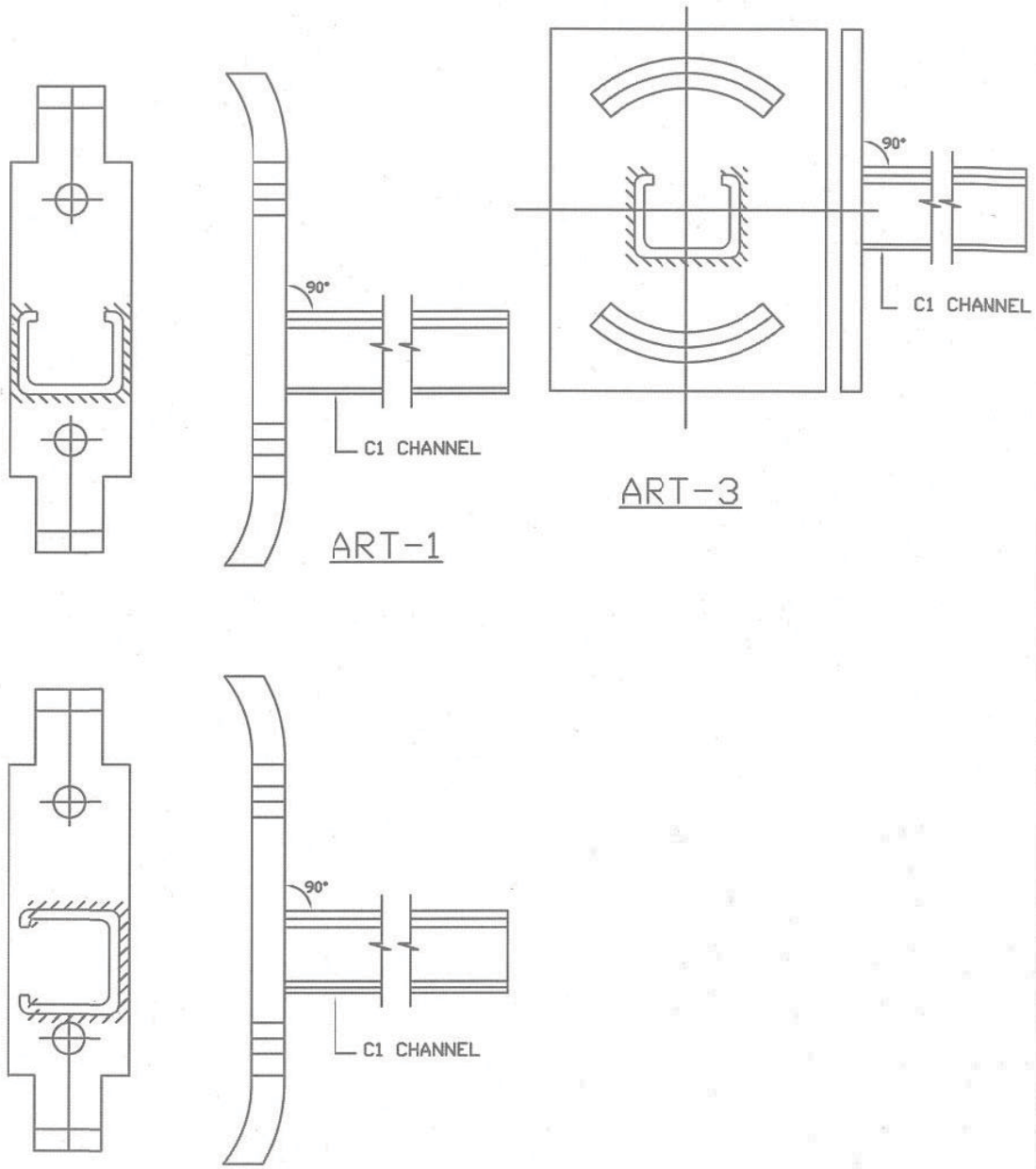

NOTES.
1. MATERIAL : MS SHEET.
2. FINISH : HOT DIP GALVANIZED

This drawing and the design it covers are the property of NTPC LTD. and must not be copied, loaned or exhibited either in part or in whole without written permission. Any contravention is liable for prosecution.

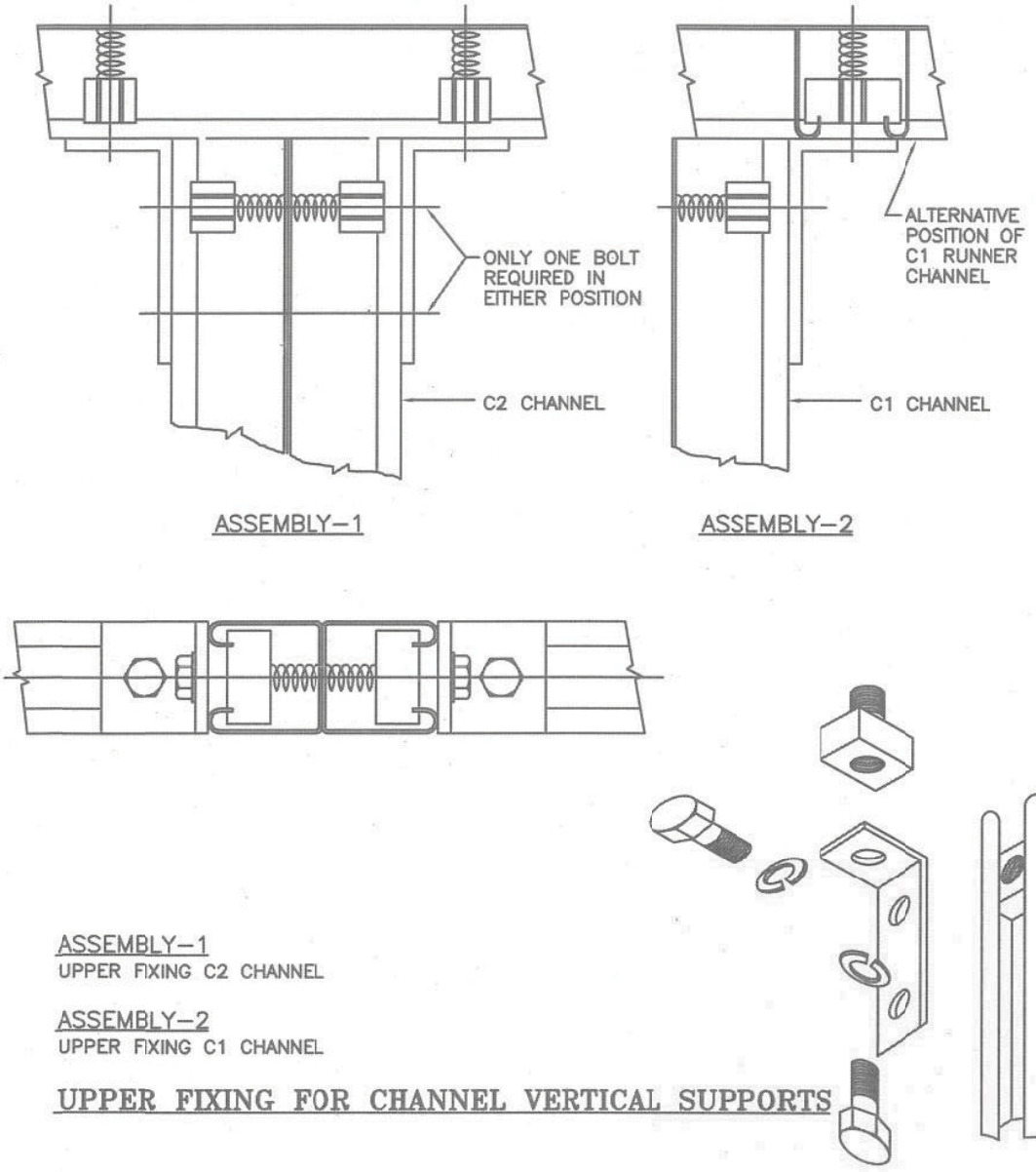

ASSEMBLY–1
UPPER FIXING C2 CHANNEL

ASSEMBLY–2
UPPER FIXING C1 CHANNEL

UPPER FIXING FOR CHANNEL VERTICAL SUPPORTS

NOTES.
1. MATERIAL : MS SHEET.
2. FINISH : HOT DIP GALVANIZED

This drawing and the design it covers are the property of NTPC LTD. and must not be copied, loaned or exhibited either in part or in whole without written permission. Any contravention is liable for prosecution.

This drawing and the design it covers are the property of NTPC LTD. and must not be copied, loaned or exhibited either in part or in whole without written permission. Any contravention is liable for prosecution.

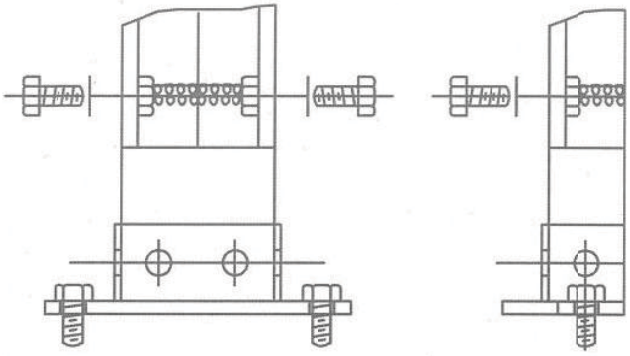

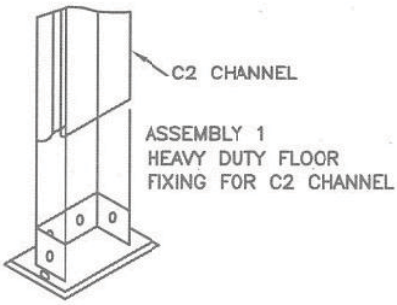

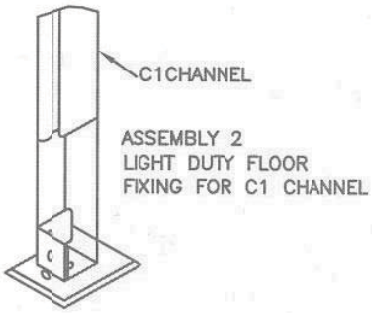

FLOOR FIXING FOR CHANNEL VERTICAL SUPPORTS

NOTES.
1. MATERIAL : MS SHEET.
2. FINISH : HOT DIP GALVANIZED

This drawing and the design it covers are the property of NTPC LTD. and must not be copied, loaned or exhibited either in part or in whole without written permission. Any contravention is liable for prosecution.

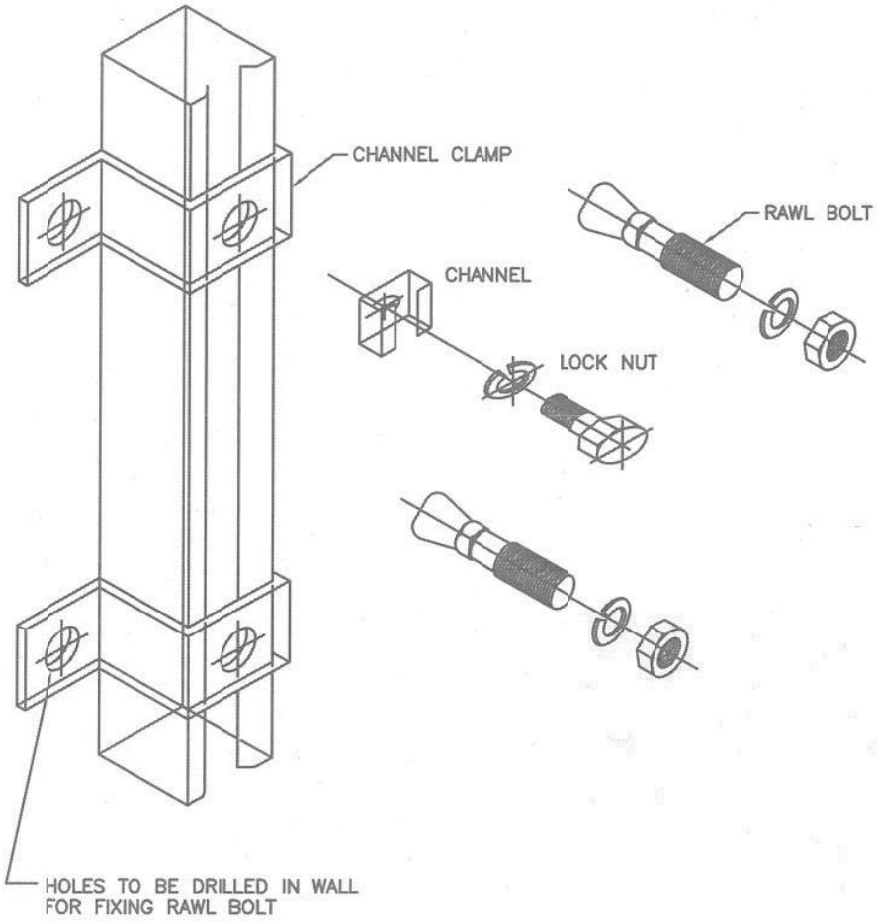

NOTES.
1. MATERIAL : MS SHEET.
2. FINISH : HOT DIP GALVANIZED

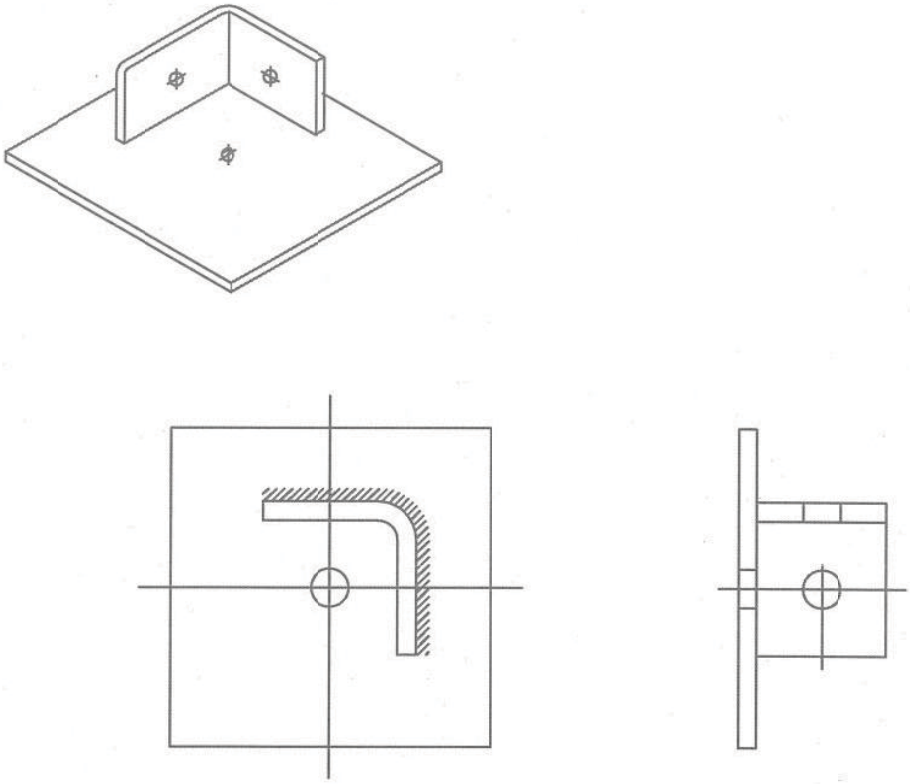

NOTES.
1. MATERIAL : MS SHEET.
2. FINISH : HOT DIP GALVANIZED

This drawing and the design it covers are the property of NTPC LTD. and must not be copied, loaned or exhibited either in part or in whole without written permission. Any contravention is liable for prosecution.

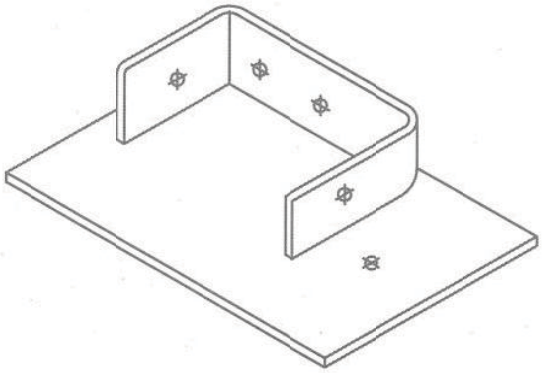

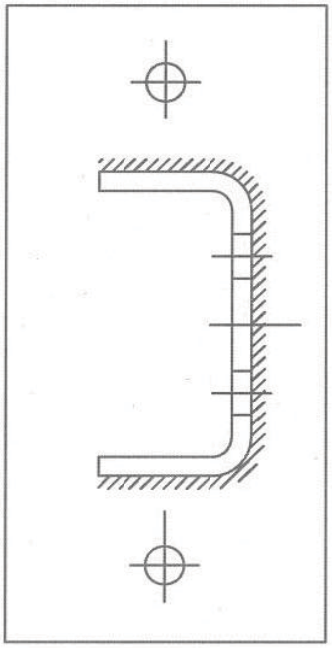

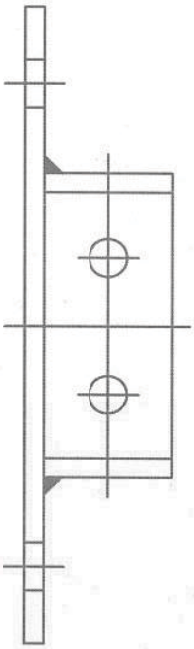

NOTES.
1. MATERIAL : MS SHEET.
2. FINISH : HOT DIP GALVANIZED

This drawing and the design it covers are the property of NTPC LTD. and must not be copied, loaned or exhibited either in part or in whole without written permission. Any contravention is liable for prosecution.

This drawing and the design it covers are the property of NTPC LTD. and must not be copied, loaned or exhibited either in part or in whole without written permission. Any contravention is liable for prosecution.

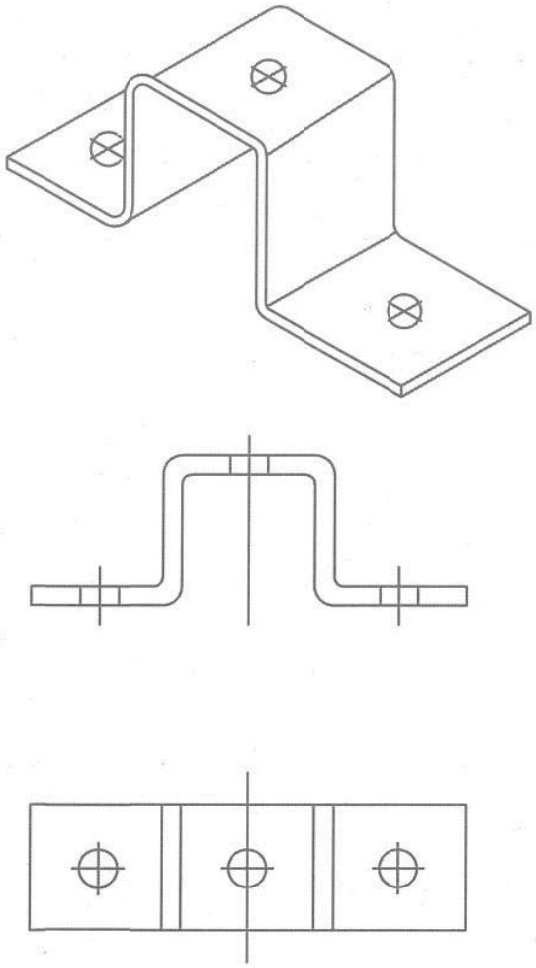

BRACKET-C1 CHANNEL CLAMP HEAVY DUTY.

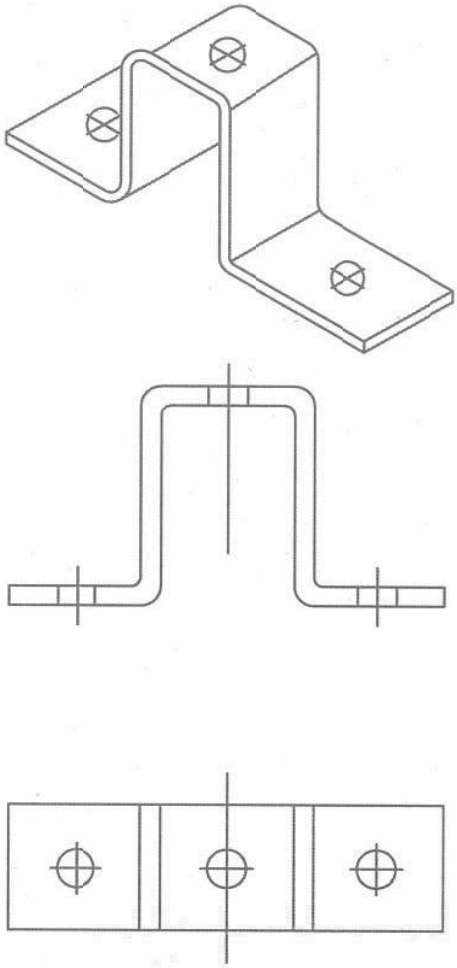

BRACKET-C2 CHANNEL CLAMP.

NOTES.
1. MATERIAL : MS SHEET.
2. FINISH : HOT DIP GALVANIZED

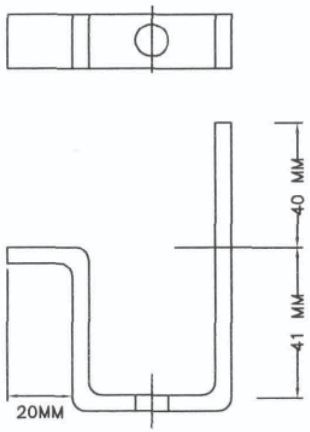

TRESTLE BRACKET.

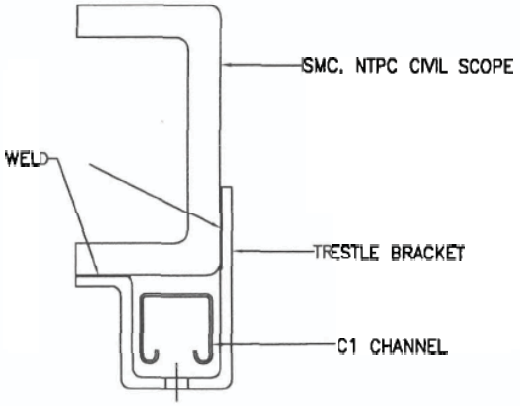

FIXING ARRANGEMENT OF TRESTLE BRACKET.

NOTES

1) MATERIAL : MILD STEEL.
2) FINISH : HOT DIP GALVANISED.

16A

TRAY1A-211-022A

This drawing and the design it covers are the property of NTPC LTD. and must not be copied, loaned or exhibited either in part or in whole without written permission. Any contravention is liable for prosecution.

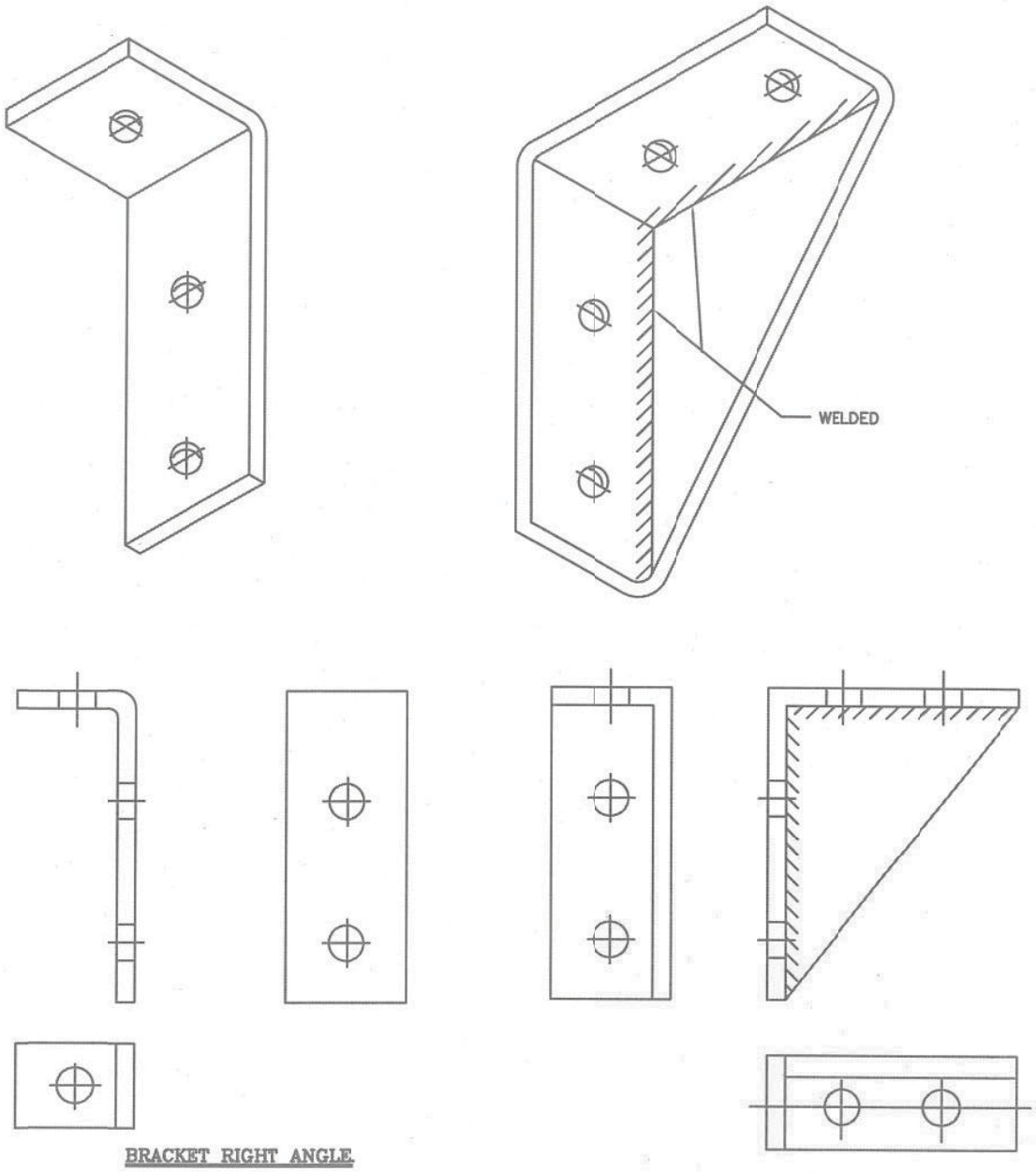

NOTES.
1. MATERIAL : MS SHEET.
2. FINISH : HOT DIP GALVANIZED

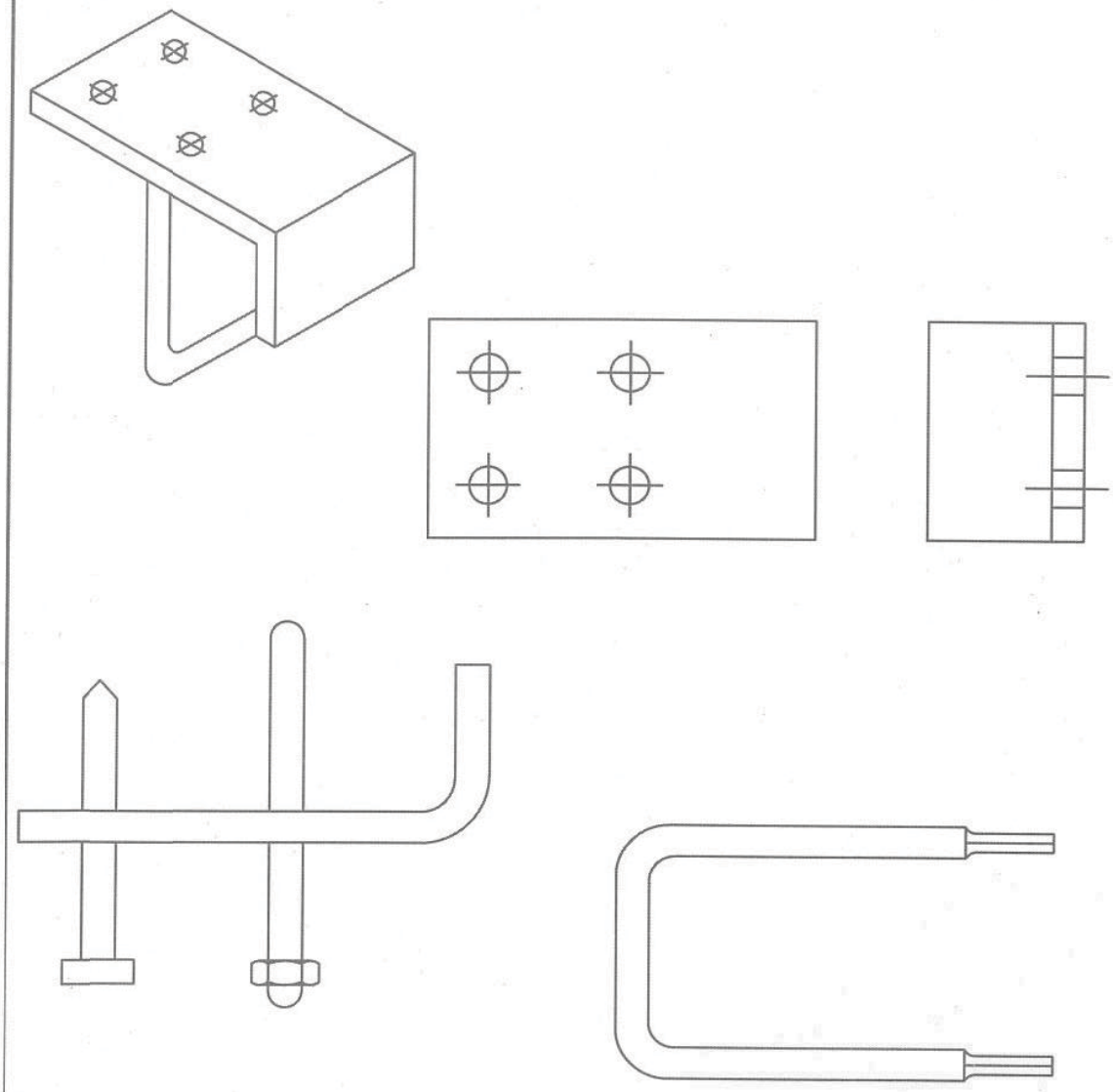

NOTES.
1. MATERIAL : MILD STEEL
2. FINISH : HOT DIP GALVANIZED

This drawing and the design it covers are the property of NTPC LTD. and must not be copied, loaned or exhibited either in part or in whole without written permission. Any contravention is liable for prosecution.

This drawing and the design it covers are the property of NTPC LTD. and must not be copied, loaned or exhibited either in part or in whole without written permission. Any contravention is liable for prosecution.

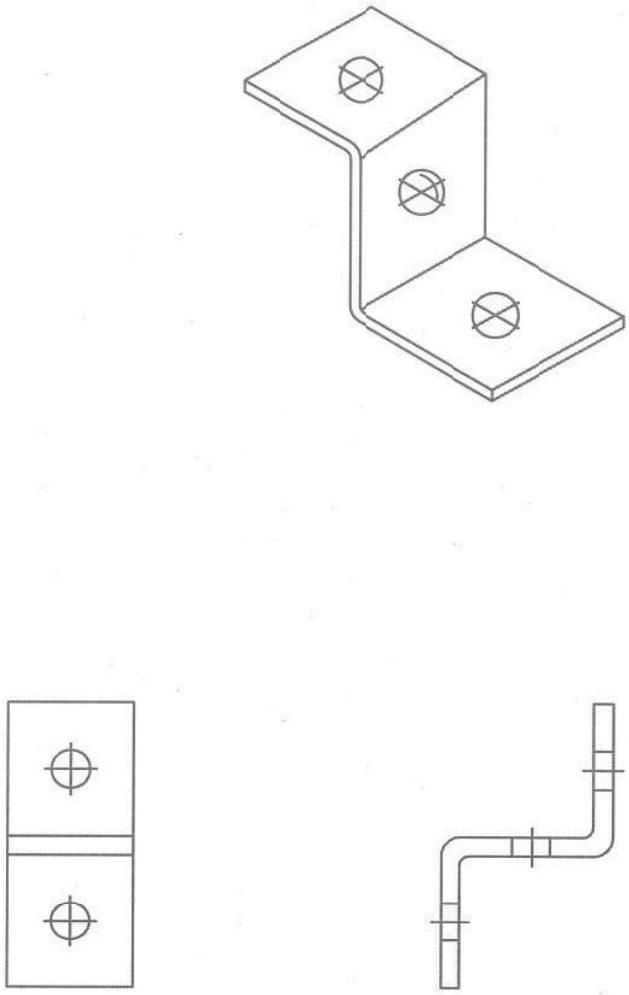

BRACKET-C1 CHANNEL CLAMP.

NOTES.
1. MATERIAL : MILD STEEL
2. FINISH : HOT DIP GALVANIZED

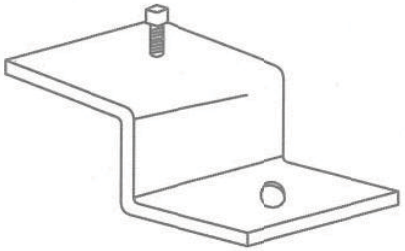

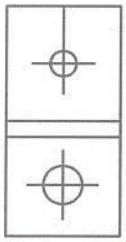

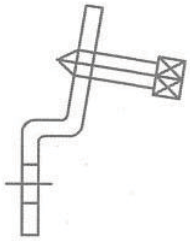

NOTES.
1. MATERIAL : MILD STEEL
2. FINISH : HOT DIP GALVANIZED

This drawing and the design it covers are the property of NTPC LTD. and must not be copied, loaned or exhibited either in part or in whole without written permission. Any contravention is liable for prosecution.

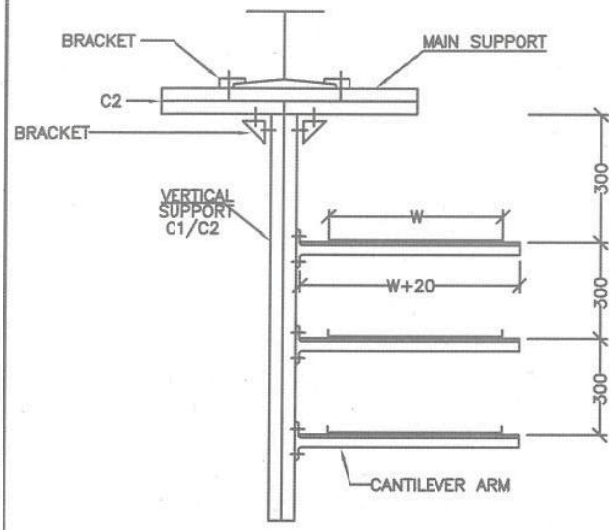

VERTICAL SUPPORT

1) FOR 1 TO 6 TIER OF 600mm TRAY – C2 CHANNEL
2) FOR 1 TO 3 TIER OF 300mm TRAY – C1 CHANNEL
3) FOR 4 TO 6 TIER OF 300mm TRAY – C2 CHANNEL
4) FOR 1 TO 6 TIER OF 150mm TRAY – C1 CHANNEL

ARRANGEMENT TYPE–B1

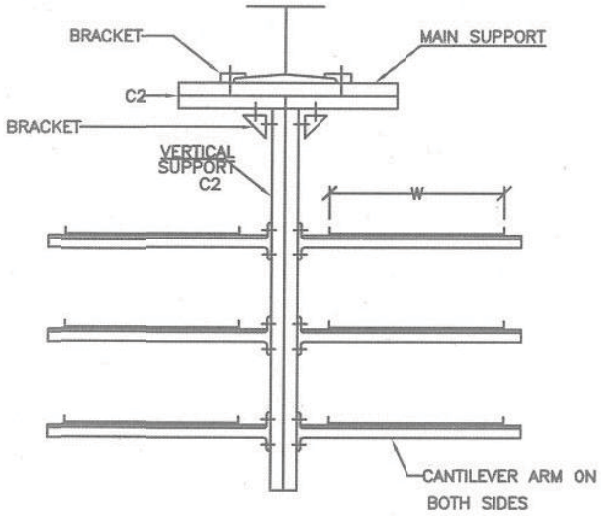

NOTES.

1. ALL DIMENSIONS ARE IN mm.
2. MATERIAL : MS SHEET.
3. FINISH : HOT DIP GALVANIZED
4. IN CASE OF HANGING SUPPORT C2 CHANNEL TO BE USED FOR MAIN SUPPORT

ARRANGEMENT TYPE–B2

This drawing and the design it covers are the property of NTPC LTD. and must not be copied, loaned or exhibited either in part or in whole without written permission. Any contravention is liable for prosecution.

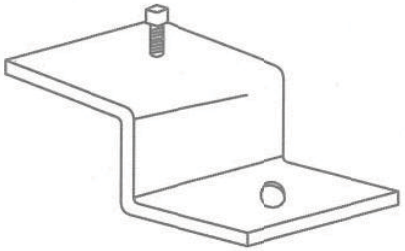

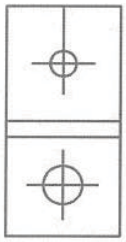

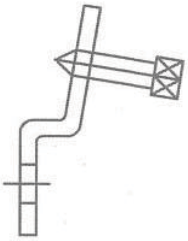

NOTES.
1. MATERIAL : MILD STEEL
2. FINISH : HOT DIP GALVANIZED

This drawing and the design it covers are the property of NTPC LTD. and must not be copied, loaned or exhibited either in part or in whole without written permission. Any contravention is liable for prosecution.

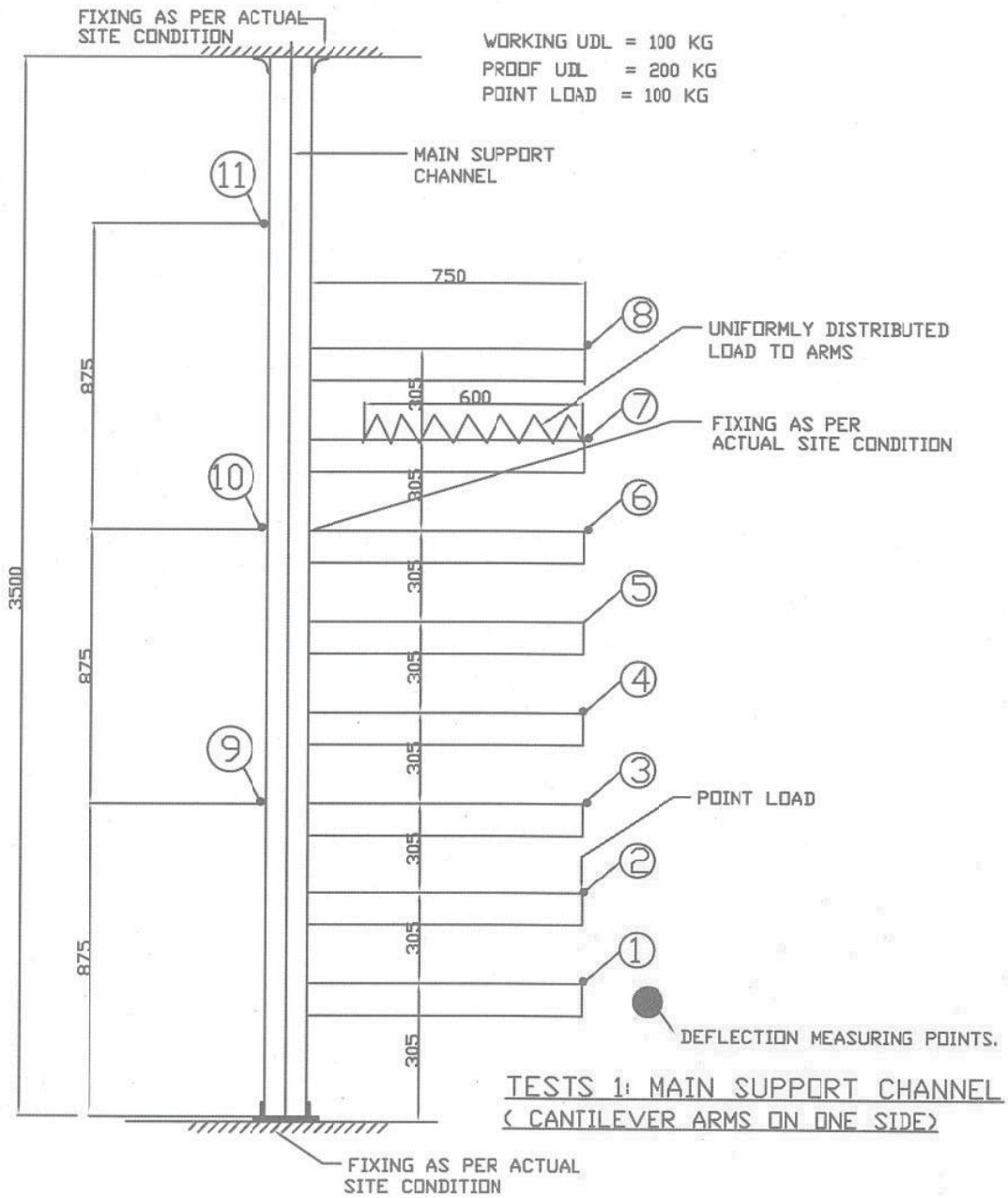

NOTES.
1. ALL DIMENSIONS ARE IN mm.
2. BRACKETS USED FOR FIXING OF C1/C2 CHANNEL SHALL BE ANCHOR BOLTED/WELDED.

This drawing and the design it covers are the property of NTPC LTD. and must not be copied, loaned or exhibited either in part or in whole without written permission. Any contravention is liable for prosecution.

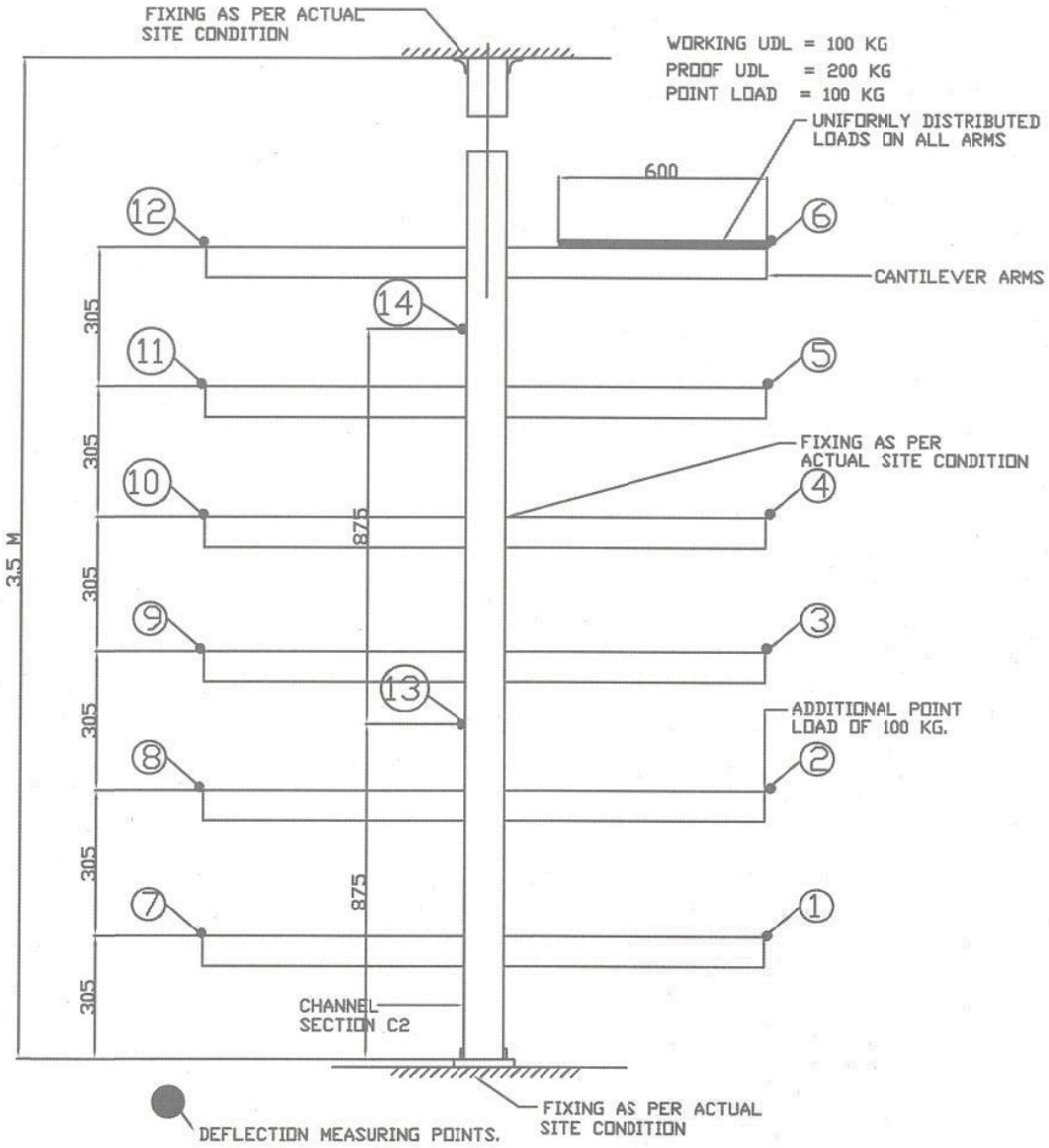

TEST 2A : MAIN SUPPORT CHANNEL
(CANTILEVER ARMS ON BOTH SIDES)

NOTES.
1. ALL DIMENSIONS ARE IN mm.
2. BRACKETS USED FOR FIXING OF C1/C2 CHANNEL SHALL BE ANCHOR BOLTED/WELDED.

This drawing and the design it covers are the property of NTPC LTD. and must not be copied, loaned or exhibited either in part or in whole without written permission. Any contravention is liable for prosecution.

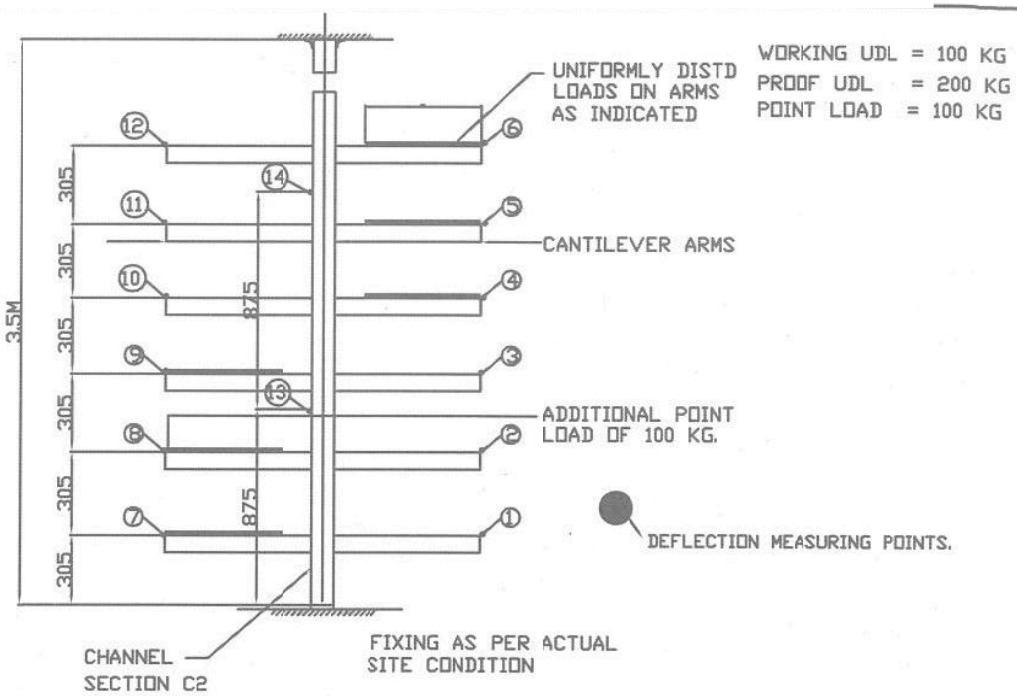

TEST 2B MAIN SUPPORT CHANNEL

(ASYMMETRIC LOADING)

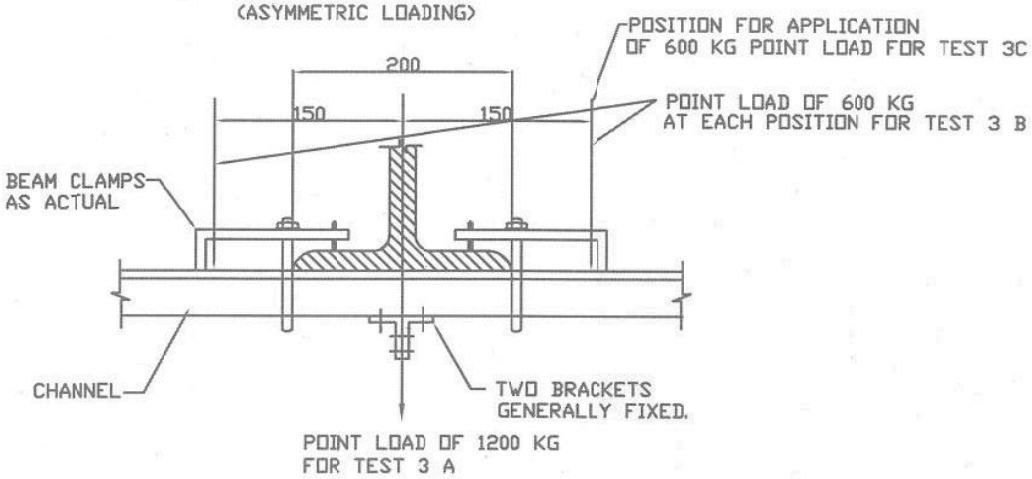

TEST 3A, 3B & 3C

NOTES.
1. ALL DIMENSIONS ARE IN mm.
2. BRACKETS USED FOR FIXING OF C1/C2 CHANNEL SHALL BE ANCHOR BOLTED/WELDED.

This drawing and the design it covers are the property of NTPC LTD. and must not be copied, loaned or exhibited either in part or in whole without written permission. Any contravention is liable for prosecution.

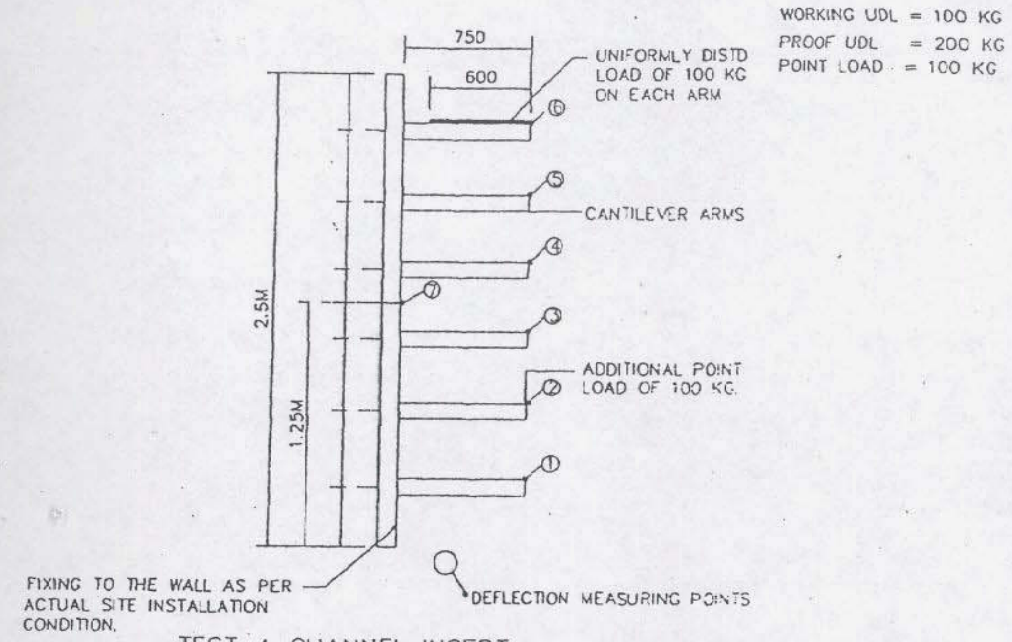

TEST 4 CHANNEL INSERT

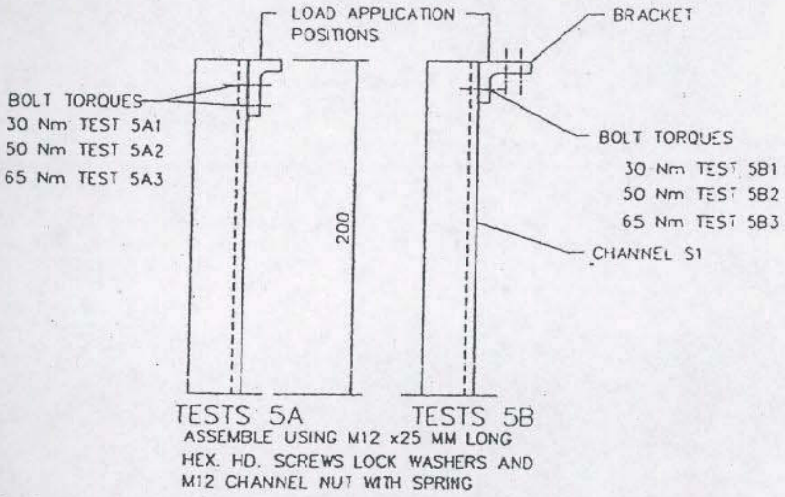

TESTS 5A 1,2,3 & 5B 1,2,3 CHANNEL NUT SLIP CHARACTERISTIC.

NOTES

ALL DIMENSIONS ARE IN MM
(SCALE–NTS)

This drawing and the design it covers are the property of NTPC LTD. and must not be copied, loaned or exhibited either in part or in whole without written permission. Any contravention is liable for prosecution.

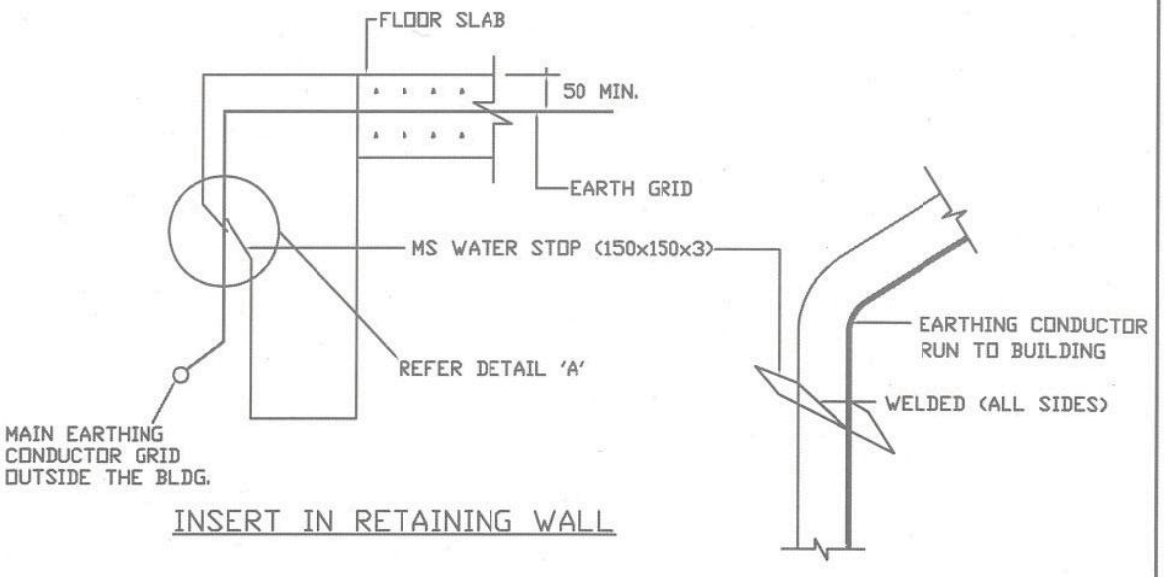

INSERT IN RETAINING WALL

DETAIL 'A'

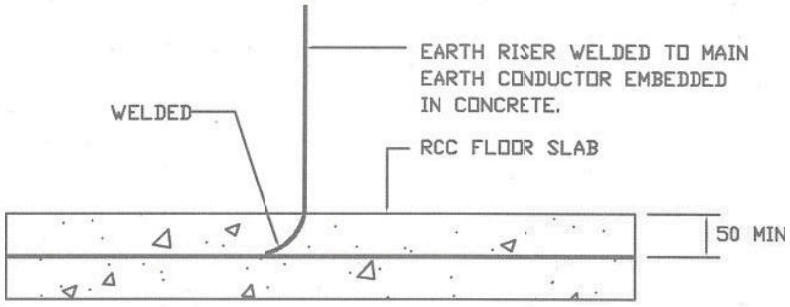

EARTH RISER

NOTE.
1. ALL DIMENSIONS ARE IN mm.

REV. NO.	DESCRIPTION	DRAWN	DESIGN	CHKD	M	E	C	C&I	ARCH	APPD	DATE
RC	FOR TENDER PURPOSE				–		–	–	–		05.07.10
RB	FOR TENDER PURPOSE	RKG	RKG	VKM	–	SS	–	–	–	AS	
RA	FOR TENDER PURPOSE	–	–	–	–	–	–	–	–	–	

CLEARED BY

एन टी पी सी NTPC

NTPC LTD.
(A GOVERNMENT OF INDIA ENTERPRISE)
ENGINEERING DIVISION

PROJECT: STANDARD

TITLE: EARTHING DETAILS

SIZE	SCALE	DRG. NO.	REV. NO.
A4	NTS	0000-211-POE-A-041	RC

This drawing and the design it covers are the property of NTPC LTD. and must not be copied, loaned or exhibited either in part or in whole without written permission. Any contravention is liable for prosecution.

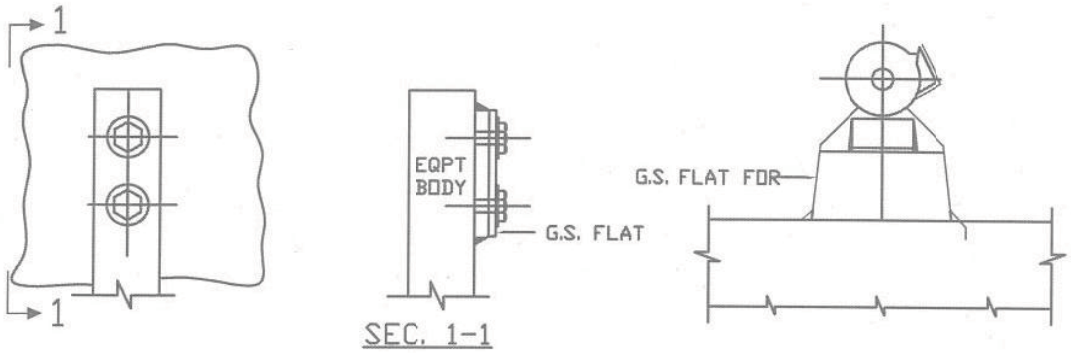

EQUIPMENT GROUNDING WITH G.S. FLAT

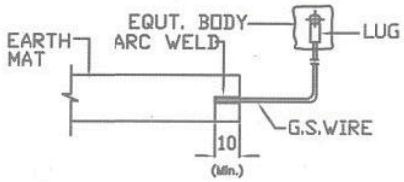

EQUIPMENT GROUNDING WITH G.S. WIRE

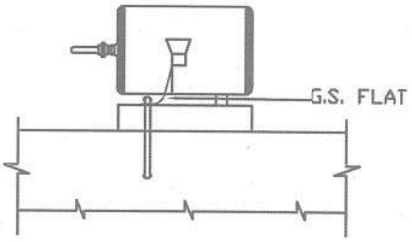

MOTOR TERMINAL BOX GROUNDING DETAIL

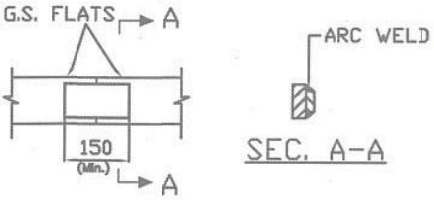

LAP JOINTS BETWEEN G.S. FLATS

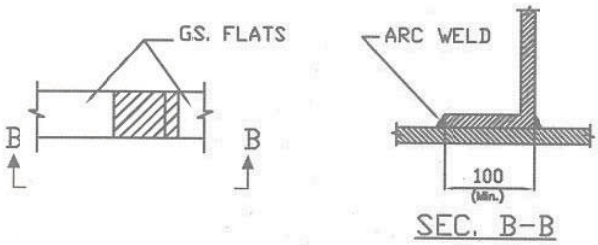

ANGULAR JOINTS BETWEEN G.S. FLATS

NOTE.
1. ALL DIMENSIONS ARE IN mm.

REV. NO.	DESCRIPTION	DRAWN	DESIGN	CHKD	M	E	C	C&I	ARCH	APPD	DATE
RC	FOR TENDER PURPOSE				–		–	–	–		05.07.10
RB	FOR TENDER PURPOSE	RKG	RKG	VKM	–	SS	–	–	–	AS	08.11.2006
RA	FOR TENDER PURPOSE	–	–	–	–	–	–	–	–	–	17.08.2006

CLEARED BY

एन टी पी सी NTPC

NTPC LTD.
(A GOVERNMENT OF INDIA ENTERPRISE)
ENGINEERING DIVISION

PROJECT: STANDARD

TITLE: EARTHING DETAILS

SIZE	SCALE	DRG. NO.	REV. NO.
A4	NTS	0000-211-POE-A-042	RC

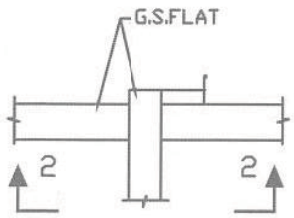

CROSS JOINTS BETWEEN FLATS

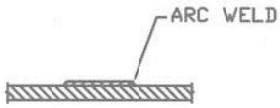

SEC. 2-2

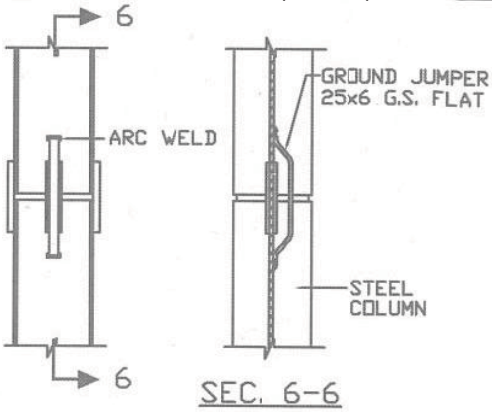

SEC. 6-6

BONDING OF STEEL COLUMN

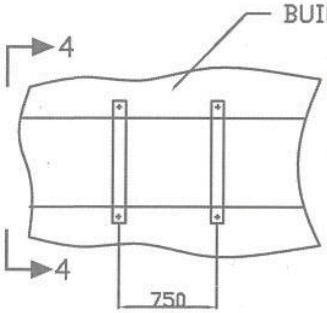

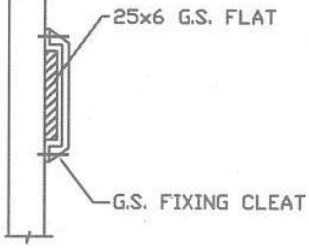

SEC. 4-4

GROUND CONDUCTOR ALONG BUILDING WALL

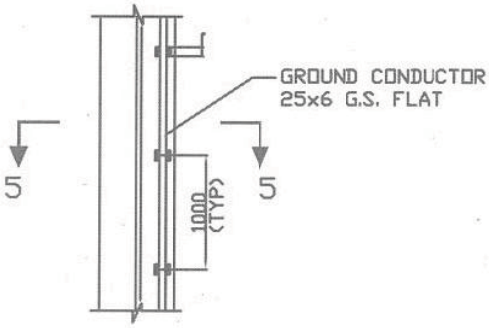

SEC. 5-5

GROUND CONDUCTOR ALONG STEEL COLUMN STRUCTURE

NOTE.
1. ALL DIMENSIONS ARE IN mm.

This drawing and the design it covers are the property of NTPC LTD. and must not be copied, loaned or exhibited either in part or in whole without written permission. Any contravention is liable for prosecution.

This drawing and the design it covers are the property of NTPC LTD. and must not be copied, loaned or exhibited either in part or in whole without written permission. Any contravention is liable for prosecution.

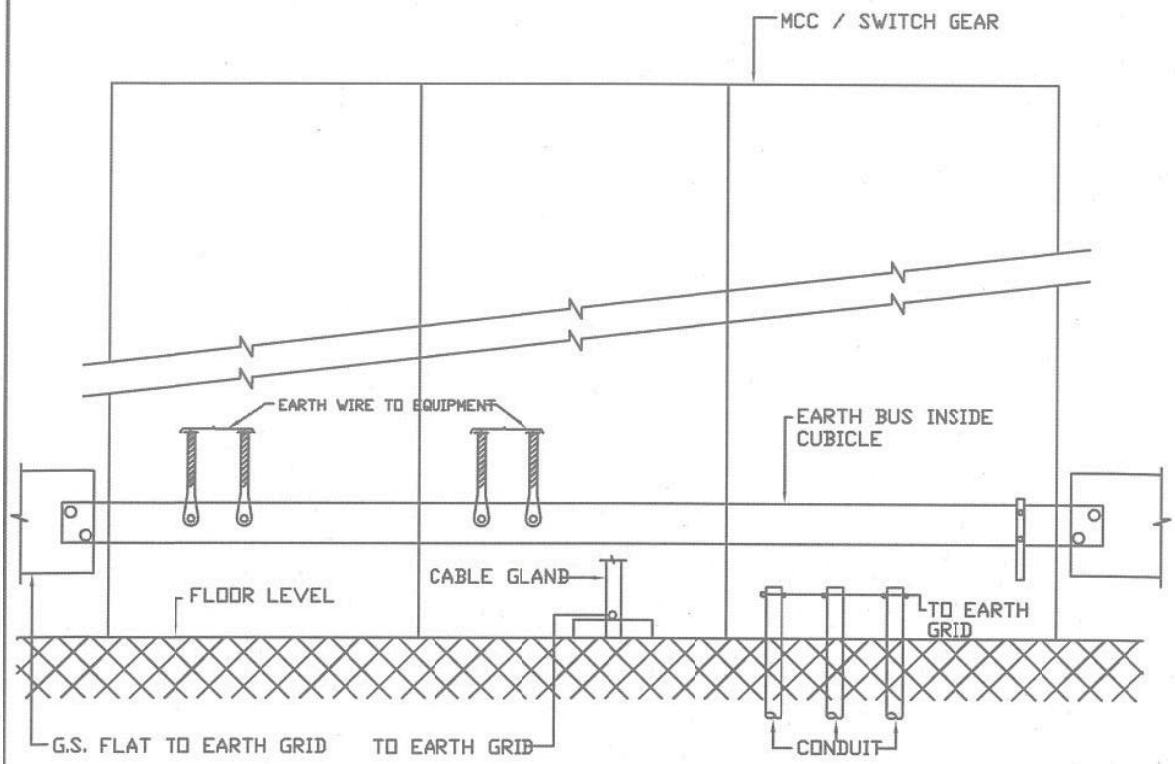

EARTHING DETAILS MCC AND SWITCHGEAR

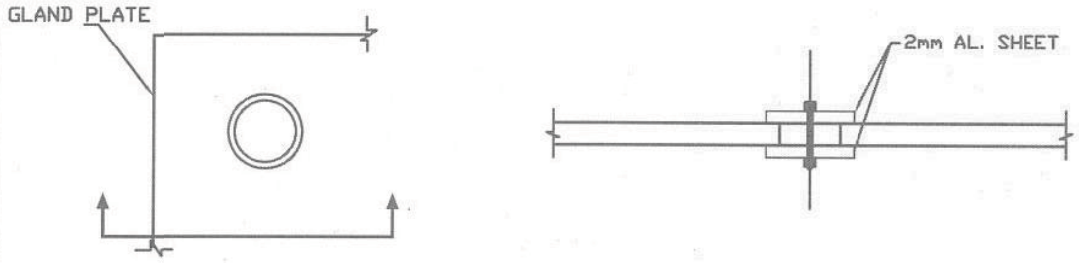

SEALING OF UNUSED CABLE OPENING

NOTE.
1. ALL DIMENSIONS ARE IN mm.

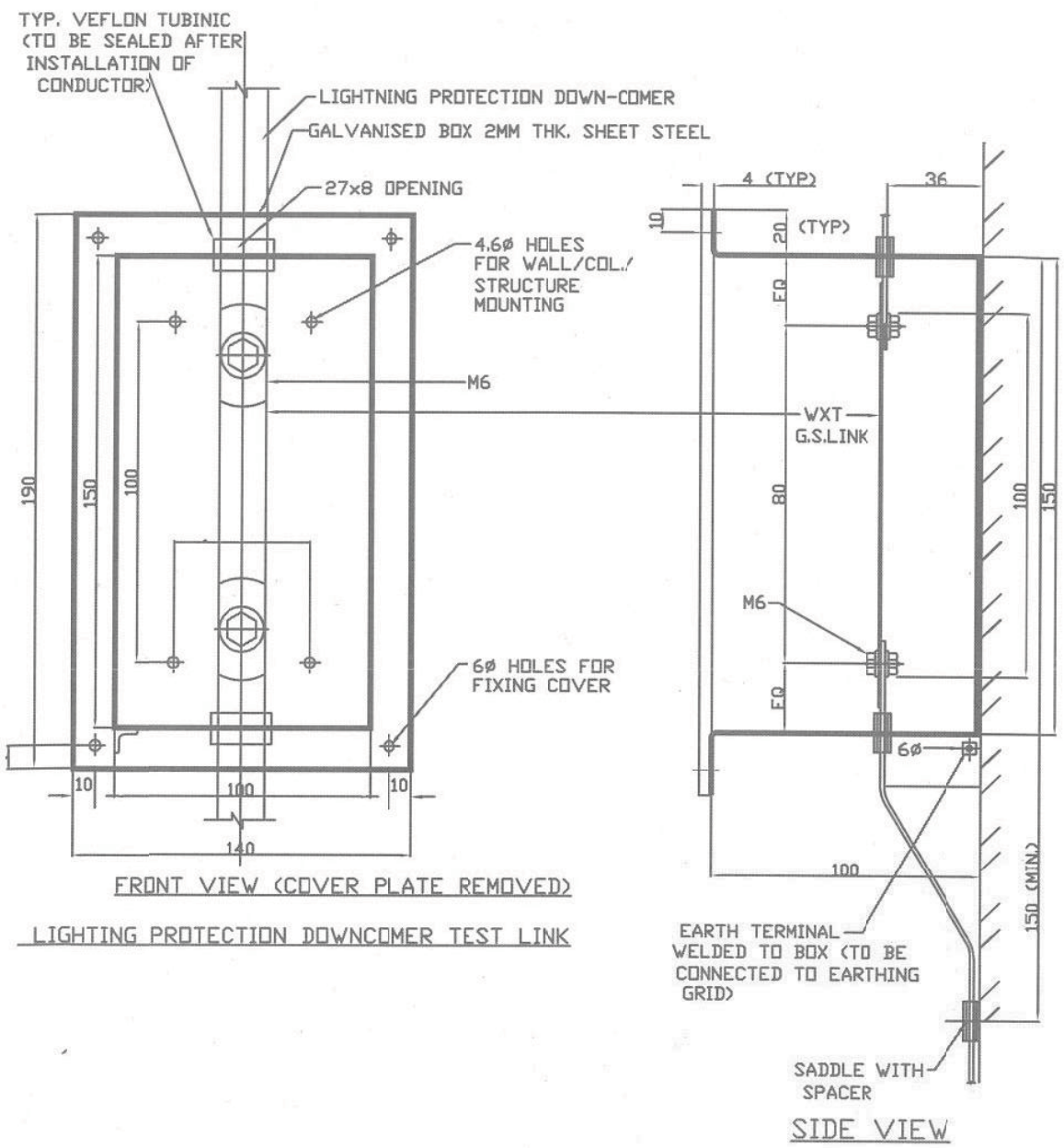

NOTE.
1. ALL DIMENSIONS ARE IN mm.
2. THE TEST LINK SHALL BE OF SAME WIDTH AND THICKNESS AS THE DOWNCOMER.THE NUTS BOLTS AND WASHER TO BE OF GS.
3. THE DOWN COMER ENTRY AND EXIT POINTS IN TO BOX BE MADE WATER-TIGHT AFTER LAYING OF CONDUCTOR.

This drawing and the design it covers are the property of NTPC LTD. and must not be copied, loaned or exhibited either in part or in whole without written permission. Any contravention is liable for prosecution.

LT SWITCHGEAR & LT BUSDUCT

CLAUSE NO.	TECHNICAL REQUIREMENTS
1.00.00	**DESIGN PHILOSOPHY / PRACTICE FOR LV BOARD SIZING** The sizing of LV boards shall be dependent on conditions such as total load connected to a board, diversity factors for various loads connected, Fault Level and Voltage Regulation Considerations, etc. As far as practicable the system shall provide segregated supplies to main and standby auxiliaries so that the failure of supply to main auxiliary shall in no way jeopardize the standby auxiliary feed. Automatic changeover at critical switchgear / MCC sections shall be provided as necessary to prevent the loss of a unit or to ensure the equipment safety.
1.01.00	**Design Considerations:**
1.01.01	**Sizing of LT boards** a) Input kVA for a Drive = (Rating in kW X Load Factor) / (Efficiency X Power Factor) where values of load factor , power factor and efficiency are defined below: Load (service) factor for 415 V loads is taken as 0.85 for continuous loads and as 0.1 for intermittent load like crane, hoist, etc. Efficiency and power factor of LT motors shall be considered as per IS 12615. b) The Finally selected Busbar ratings for Switchboards, MCCs, ACDBs and Busducts shall include a 10% margin over the calculated values. c) Lighting load of 50 kVA (Minimum) shall be considered on each section of main switchgears with incomer from transformer as indicated in the tender SLD. d) Busbar Ratings of Valve / Damper ACDBs shall be derived by addition of 5% of the total kVA load connected and the rating of the largest Valve / Damper connected. e) Welding sockets shall be connected from Welding DBs, which shall be fed through 1X100% Welding transformers. f) ESP consumption for 100% BMCR operation shall be considered and further this load shall be uniformly divided among ESP Switchgears. g) The loads for mechanical auxiliary systems shall be met by auxiliary transformers based on the criteria that each switchgear/MCC/Distribution board shall be fed either by 2x100% or 3x50% transformers/feeders and, these shall be rated to carry the maximum load expected to be imposed. Each of the above boards shall be sectionalized. h) The sizing of Unit Emergency boards shall be in according to the DG rating. The Emergency board shall have tie to both sections of Unit Service Switchgear for catering unit loads in Blackout Conditions. i) For Main Plant (TG & SG areas) and Service Building, each Lighting DB shall have 1X100% transformer. For all other areas, each Lighting DB shall have 2X100% transformers.
1.02.00	**Layout Criteria** The switchboards can be split into two sections based on layout constraints in case of long switchboards to optimize Switchgear room layouts. The two sections of the split shall be connected by Busduct / Cable as per layout requirements.

CLAUSE NO.	TECHNICAL REQUIREMENTS
1.03.00	**Standardization** It shall be preferred to follow a standardization of Terminal Numbers across all LV Modules for ease of Interconnection and maintenance.
1.04.00	**Plant control cable Interconnections** Control cable interconnections between switchgears and transformer marshalling boxes, switchgears and motor terminal boxes / push button stations, and between various switchgears shall be in the contractor's scope. (a) Standard control cable sizes shall be 1.5 mm^2 (b) Cable size for motor space heater application shall be 2CX2.5 mm^2 (c) Interconnections for Current Transformer terminals shall use two cores of 1.5mm^2 size per phase (d) Separate control cables shall be used for current transformers (e) Separate control cables shall be laid for EPB (Emergency/Local Push Button) status from EPB to Switchgear for the Switchgear and PLC/DCS.
2.00.00	**CODES AND STANDARDS**
2.01.00	All equipment shall, generally, comply with the updated issues of (a.) Applicable Indian Standards (b.) Indian Electricity Act. (c.) Indian electricity rules
2.02.00	Equipment complying with any other authoritative / internationally recognized standards such as IEC, British, U.S.A., German, etc. will also be considered if it ensures performance equivalent or superior to Indian Standards. In such cases the contractor shall clearly indicate the standard adopted and furnish the copy of latest English version of the same along with the bid and bring out the salient features for comparison.
2.03.00	All standards, specifications and codes of practice referred to herein shall be the latest editions including all applicable official amendments and revisions as published one month prior to the date of opening of bids. In case of conflict between this specification and those (IS codes, Standards etc.) referred to herein, the former shall prevail. All work shall be carried out as per the following codes and standards.

IS: 5	Colours for ready-mixed paints and enamels.
IS: 694	PVC insulated cables for working voltages up to and including 1100V.
IS: 722	A.C. Electricity Meters
IS: 1248	Electrical Indicating instruments
IS/IEC: 60947–1	Degree of protection provided by enclosures for low voltage Switchgear and Control gear
IS/IEC: 60947-2	A.C. circuit Breakers
IS: 2551	Danger Notice Plates

CLAUSE NO.	TECHNICAL REQUIREMENTS

IS: 2629	Hot dip galvanising
IS: 2705	Current Transformers
IS/IEC: IEC-60947-4-1	Contactors and motors starter for voltages not exceeding 1000 V AC or 1200 V DC
IS: 3043	Code of practice for earthing.
IS: 3072	Code of practice for installation and maintenance of Switchgear
IS: 3156	Voltage Transformers
IS: 3202	Code of practice for climate proofing of electrical equipment.
IS: 3231	Electrical relays for power system protection.
IS/IEC 60947	Air-Break Switches, air break disconnectors, air break disconnector and fuse combination units for voltages not exceeding 1000V AC or 1200 V DC.
IS/IEC 60947-1 / IEC-60947-1	General Requirements for Switchgear and Control gear for voltages not exceeding 1000 V.
IS: 5082	Wrought Aluminium and Aluminium alloys for electrical purposes.
IS: 6005	Code of practice of phosphating of iron and steel.
IS/IEC 60947-5-1 / IEC-60947-5-1	LV switchgear and Control gear Control current devices and switching element.
IS: 8623 / IEC: 61439-1/2	Low Voltage Switchgear & Control gear assemblies
IS: 8686	Static Relays
IS: 13703 / IEC: 60269	HRC Cartridge fuses
IS: 10118 (4 parts)	Code of practice for selection, installation and maintenance of switchgear and control gear.
IS: 11171	Specification for dry type transformers.
IEC: 60255	Electrical Relays
IEC: 61850	Communication networks and systems in substations
IS: 11353	Guide for uniform system of marking and identification of conductors and apparatus terminals
IS: 12021	Specification of control transformers for switchgear and Control gear for voltage not exceeding 1000V AC.

CLAUSE NO.	TECHNICAL REQUIREMENTS

IEC: 60947-7-1	Terminal blocks for Copper conductors
IS :513 (2008)	Cold Rolled Low Carbon Steel Sheets and Strips

3.00.00 TECHNICAL PARAMETERS

3.01.00 **Power Supply**

3.01.01 AC SYSTEM

1)	Voltage	415 V ± 10%,3 Phase, 4 wire, solidly earthed
2)	Frequency	50 Hz +/- 5%
3)	Combined variation (in volts & frequency)	10% absolute sum
4)	Fault Level	50 kA(RMS)

3.01.02 DC SYSTEM

1)	System Voltage	240 V DC 2-Wire, Unearthed
2)	Fault Level	20 kA

3.01.03 CONTROL SUPPLY VOLTAGE

1)	Trip & closing coil of circuit breaker	240 V DC/120 V DC
2)	Spring charging motor	240 V DC/120 V DC
3)	MCC control supply	110 V AC Neutral solidly earthed
4)	Space heater & lighting	240 V AC Neutral solidly earthed

3.02.00 **CUBICLE DATA**

Busbar Rating

1)	Continuous Current rating	As per requirement
2)	Short time rating where	
	a) CB is used as incomer	50 kA(RMS) for one sec
	b) Fuse protection is used in Incomer	Prospective current of 50 kA(RMS) for the fuse clearing

CLAUSE NO.	TECHNICAL REQUIREMENTS	
		time
	3) Dynamic Rating where	
	a) CB is used as incomer	105 kA(PEAK)
	b) Fuse Protection is used in incomer	Prospective current of 105 kA (PEAK) as limited by fuse
	4) Busbar insulation	
	a) For switchgear	PVC Sleeve insulated
	b) For MCC	PVC Sleeve insulated
	c) ACDB	PVC Sleeve insulated
	d) DCDB	PVC Sleeve insulated
	e) For fuse boards	PVC Sleeve insulated/ epoxy coated
3.03.00	**CIRCUIT BREAKER**	
	1) Type	Air break spring charged stored energy type
	2) Operating duty	O-3 min-CO-3 min-CO
	3) Symmetrical interrupting	50 kA(RMS)
	4) Short circuit rating	105 kA(PEAK)
	5) Short Circuit Breaking current	
	a) AC Component	50 kA(RMS)
	b) DC Component	As per IS/IEC 60947
	6) Short time withstand	50 kA(RMS) for 1 s
	7) No of aux. contacts	4 NO + 4 NC for DDCMIS interface
3.04.00	**METERS**	
	1) Accuracy class	2.0
	2) One min. power frequency withstand test voltage	2.0 kV (rms)
3.05.00	**Current Transformers**	
	1) Type	Cast Resin Bar Primary / Nylon Casing

CLAUSE NO.	TECHNICAL REQUIREMENTS
	2) Voltage class and frequency — 650 V, 50 HZ
	3) Class of insulation — E or better
	4) Rated Secondary Current — 1 A
	5) Accuracy class & burden
	a) For protection — 5P20, 5VA
	PS Class for REF
	b) For metering — class 1.0, 5VA (min)
	class 0.2s, 5VA (min) for feeders indicated in SLD ,if any
	6) Instrument Security Factor (ISF) for metering CT — 5
	7) Short time withstand
	a) For CT Associated with circuit breaker — 50 kA(RMS) for 1 sec
	b) For CT Associated with fuse protected feeders — Prospective current of 50 kA(RMS) for the Fuse clearing time
	8) Dynamic withstand
	a) For CTs Associated with circuit breaker — 105 kA(PEAK)
	b) For CT Associated with fuse protected feeders — Prospective current of 105 kA(PEAK) as Limited by fuse
3.06.00	**BUSDUCT**
	1) Type — Non-Segregated
	2) One minute power frequency withstand voltage — 2.5 kV
	3) One second short ckt withstand current — 50 kA(RMS)
	4) Momentary dynamic current withstand — 105 kA(PEAK)
	BUSDUCT (SANDWICH TYPE)
	1) Type — Bus Trunking
	2) Rated Insulation voltage — 1000V
	3) One second short ckt withstand current — 50KA(RMS)

CLAUSE NO.	TECHNICAL REQUIREMENTS
	4) Momentary dynamic current withstand — 105KA(PEAK)
	5) Power frequency withstand voltage — 3.5kv
	6) Impulse withstand voltage — 8kV
	7) Insulation — Class F
3.07.00	**VOLTAGE TRANSFORMERS**
	1) Type — Cast Resin
	2) Voltage Ratio — 415 / 110 V for line PT 415/√3 / 110/√3 V for Bus PT
	3) Method of Construction — V-V
	4) Accuracy Class — 0.5 0.2 for feeders indicated in SLD ,if any
	5) Rated Voltage factor — 1.1continuous, 1.5 for 30 sec.
	6) Class of insulation — E or better
	7) One minute power frequency withstand voltage — 2.5 KV
3.08.00	**HRC FUSES**
	1) Voltage Class — 650 Volts
	2) Rupturing capacity — 80 kA (rms) for AC ckt. 20 kA for DC ckt.
3.09.00	**CONTACTORS**
	1) Type — Air break electro magnetic
	2) Utilising Category — AC3 of IS/IEC 60947 for non reversible AC4 of IS/IEC 60947 for reversible drives
3.10.00	**Relays**
	1) Power frequency withstand voltage — 2.5 kV for 1 sec. or 2.0 kV for 1 min.

CLAUSE NO.	TECHNICAL REQUIREMENTS	
3.11.00	**CONTROL TRANSFORMERS**	
	1) Type	Dry / Cast Resin
	2) Voltage Ratio	415 / 110 with taps ± 5% in steps of 2.5%
	3) Class of insulation	Class-B or better
	4) One minute power frequency withstand voltage	2.5 kV
	5) Rating	1.5 X Adequate for application.
3.12.00	**LIGHTING TRANSFORMER / WELDING TRANSFORMER**	
	1) Type & Rating	Dry type / 100 KVA(Welding TRF), 50KVA(Minimum)(Lighting TRF)
	2) Voltage Ratio	415/415V, +/- 5% taps in steps of 2.5%
	3) Class of insulation	B or better
	4) One minute power frequency withstand voltage	2.5 KV
	5) Enclosure protection	IP-42
3.13.00	**TRANSDUCERS**	
	1) Current transducers	
	a) Input	0-1 A (CT secondary)
	b) Rated frequency	50 Hz
	c) Output	4-20 mA (2 Nos. decoupled)
	d) Over current	Transducer for motor current ammeters shall be capable of withstanding min. 6 times CT sec. current of 1A for a min period of 30 seconds
	e) Accuracy	1.0

CLAUSE NO.	TECHNICAL REQUIREMENTS
	2) Voltage Transducers a) Input: 110 V / 415 V / 240 V, 50 Hz (for AC) / 220 V / 110 V DC (for DC) b) Output: 4-20 mA (2 Nos. decoupled) c) Accuracy: 1.0
3.14.00	**MCCB** 1) Rated voltage: 415V 2) Rated insulation level: 690V 3) Rated ultimate &Service S.C. breaking capacity: 50 kA 4) Rated making capacity: 105 kA 5) Utilization category: A
4.00.00	**CONSTRUCTIONAL DETAILS OF SWITCHBOARDS**
4.01.00	All Switchboards i.e., 415 V Switchgears, Motor Control Centres (MCCs), AC Distribution Boards (ACDBs), 220 V DC Distribution Boards (DCDBs) and Solenoid Valve Distribution Boards, shall be of metal enclosed, indoor, floor-mounted, free-standing type.
4.02.00	All switchboard frames and load bearing members shall be fabricated using suitable mild steel structural sections or pressed and shaped cold-rolled sheet steel of thickness 2.0 mm. Frames shall be enclosed in cold-rolled sheet steel of thickness 1.6 mm. Doors and covers shall also be of cold rolled sheet steel of thickness 1.6 mm. Stiffeners shall be provided wherever necessary. The gland plate thickness shall be 3.0 mm for hot / cold-rolled sheet steel and 4.0 mm for non-magnetic material.
4.03.00	All panel edges and cover / door edges shall be reinforced against distortion by rolling, bending or by the addition of welded reinforcement members. The top covers of the panels should be designed such that they do not permanently bulge/ bend by the weight of maintenance personnel working on it.
4.04.00	The switchboards shall be of bolted design. The complete structures shall be rigid, self-supporting, and free from flaws, twists and bends. All cut-outs shall be true in shape and devoid of sharp edges.
4.05.00	All switchboards shall be of dust-proof and vermin-proof construction and shall be provided with a degree of protection of IP: 5X as per IS/IEC 60947. However, the busbar chambers having a degree of protection of IP: 42 are also acceptable where continuous busbar rating is 1600A and above. Provision shall be made in all compartments for providing IP: 5X degree of protection, when circuit - breaker or module trolley has been removed. All cut-outs shall be provided with Steel Reinforced EPDM /PU Foam gaskets.
4.06.00	Provision of louvers on switchboards would not be preferred. However, louvers backed with metal screen are acceptable on the busbar chambers where continuous busbar rating is 1600 A and above.
4.07.00	The switchboards shall comply to the Internal arc fault containment tests of 50 kA for 0.3s.
4.08.00	The enclosure for outdoor panels shall be constructed of stainless steel sheets in order to have protection against corrosion. The Degree of protection for outdoor panels shall be IP: 55. The panels shall be mounted on a pedestal at a height of 500mm from ground level.

CLAUSE NO.	TECHNICAL REQUIREMENTS
4.09.00	All switchboards shall be of uniform height not exceeding 2450 mm. The height of the operating handle, push buttons etc shall be restricted between 300mm and 2000mm.
4.10.00	Switchboards shall be easily extendable on both sides by the addition of vertical sections after removing the end covers.
4.11.00	Switchboards shall be supplied with base frames made of structural steel sections, along with all necessary mounting hardware required for welding down the base frame to the foundation / steel insert plates. The base frame height shall be such that floor finishing (50 mm thick) to be done by Contractor after erection of the switchboards does not obstruct the movement of doors, covers, withdrawable modules etc.
4.12.00	All switchboards shall be divided into distinct vertical sections (panels), each comprising of the following compartments: (a.) BUSBAR COMPARTMENT A completely enclosed bus bar compartment shall be provided for the horizontal and vertical bus bars. Bolted covers shall be provided for access to horizontal and vertical busbars and all joints for repair and maintenance, which shall be feasible without disturbing any feeder compartment. Auxiliary and power bus bars shall be in separate compartments. (b.) SWITCHGEAR / FEEDER COMPARTMENT All equipment associated with an incomer or outgoing feeder shall be housed in a separate compartment of the vertical section. Two-tier breaker arrangement in a vertical section shall be offered for outgoing breaker feeders of rating up to 1600A. The design of the vertical section for such an arrangement shall ensure ease of termination of power cables of size & quantity appropriate to respective feeder rating. The compartment shall be sheet steel enclosed on all sides with the withdrawable units in position or removed. Insulating sheet at rear of the compartment is also acceptable. No live parts shall be accessible with equipment drawn out and degree of protection within the compartment shall be IP2X. The front of the compartment shall be provided with the hinged single leaf door with captive screws for positive closure. (c.) CABLE COMPARTMENT OR CABLE ALLEY A full-height vertical cable alley of adequate width shall be provided for power and control cables. Cable alley shall have no exposed live parts and shall have no communication with busbar compartment. Cable terminations located in cable alley shall be designed to meet the Form 4b as per IEC 61439 for safety purpose. Necessary grommets shall be provided at the cable entry of individual modules. Wherever cable alleys are not provided for distribution boards, segregated cable boxes for individual feeders shall be provided at the rear for direct termination of cables. For circuit breaker external cable connections, a separately enclosed cable compartment shall also be acceptable. The contractor shall furnish suitable plugs to cover the cable openings in the partition between feeder compartment and cable alley. Cable alley door shall be hinged. (d.) CONTROL COMPARTMENT A separate compartment shall be provided for relays and other control devices associated with a circuit breaker.
4.13.00	Sheet steel barriers shall be provided between two adjacent vertical panels running to the full height of the switchboard, except for the horizontal busbar compartment. Steel Reinforced EPDM /PU Foam gasket shall be provided between the panel sections to avoid ingress of dust into panels.

CLAUSE NO.	TECHNICAL REQUIREMENTS
4.14.00	After isolation of power and control circuit connections it shall be possible to safely carryout maintenance in a compartment with the busbar and adjacent circuit live. Necessary shrouding arrangement shall be provided for this purpose. Wherever two breaker compartments are provided in the same vertical section insulating barriers and shrouds shall be provided in the rear cable compartment to avoid accidental touch with the live parts of one circuit when working on the other circuit.
4.15.00	All 415V switchgear (circuit-breaker) panels shall be of single-front type. MCCs and DBs shall be of single-front / double-front construction as per the requirements. All single-front switch boards shall be provided with single-leaf, hinged or bolted covers at the rear. The bolts shall be of captive type. The covers shall be provided with "DANGER" labels. All panel doors shall open by 90 deg or more. In case of double-front MCCs, if this cannot be achieved for panels adjacent to a breaker panel, suitable dummy panel shall be provided by the Contractor wherever necessary.
4.16.00	All ACDBs, DCDBs and Solenoid Valve DBs shall be of fixed module type. All 415V circuit-breaker modules and contactor controlled motor modules shall be of fully draw-out type having distinct 'Service' and 'Test' positions. The equipment pertaining to a draw-out type incomer or feeder module shall be mounted on a fully withdrawable chassis which can be drawn out without having to unscrew any wire or cable connection. Suitable arrangement with cradle/ rollers, guides along with tool/lever operated racking in/out mechanism shall be provided for smooth and effortless movement of the chassis. For modules of size more than half the panel height, double guides shall be provided for smooth removal or insertion of module. All identical module chassis of same size shall be fully interchangeable without having to carry out any modifications. Suitable interlock shall be provided in DCDB for prevention of opening of Isolator (Incomer) when the bus coupler is open and vice-versa.
4.17.00	All draw-out modules shall be provided with “Closed door operation” feature wherein movement of the module from “Isolated” position to “Service” position & vice-versa and power ON / OFF operation of the module shall be possible only with the module door closed condition.
4.18.00	All disconnecting contacts for power and control circuits of draw-out modules shall be of robust and proven design, fully self-aligning and spring-loaded. Both fixed and moving contacts shall be silver-plated and replaceable. The spring-loaded power and control draw-out contacts shall be on withdrawable chassis and the same on fixed portion shall not be accepted.
4.19.00	Individual opening in the vertical bus enclosure shall permit the entry of moving contacts from the draw-out modules into vertical droppers.
4.20.00	As indicated in schematic drawings of DDCMIS controlled modules, contractor shall supply & mount two (2) coupling relays in the corresponding modules.
4.21.00	All equipment and components shall be neatly arranged and shall be easily accessible for operation and maintenance. The internal layout of all modules shall be subject to Employer's approval. The Contractor shall submit dimensional drawings showing complete internal details of busbars and module components, for each type and rating for approval of Employer.
4.22.00	Employer reserves the right to alter the cable entries, if required during detailed engineering, without any additional commercial implication.
4.23.00	Each switchboard shall be provided with undrilled, removable type gland plate, which shall cover the entire cable alley. Contractor shall ensure that sufficient cable glanding space is available for all the cables coming in a particular section through gland plate. For all single core cables, gland plate shall be of non-magnetic material. The gland plate shall preferably be provided in two distinct parts for the easy of terminating addition cables in future. The gland plate shall be provided with gasket to ensure enclosure protection. Recommended

CLAUSE NO.	TECHNICAL REQUIREMENTS
	drilling chart of gland plates for all power and control cables in the vertical panels shall be indicated by the Contractor in the respective G.A. drawings of the boards.
4.24.00	The Contractor shall consider layout of panels in a switchboard consisting of various feeder modules in a straight line, unless specified otherwise. The actual composition and disposition of various modules in a switchboard shall be finalised during detailed engineering. The Contractor shall provide adopter panel / dummy panel required to meet various configuration / arrangement of busbars adopted by the Contractor. The Switchboards fed from indoor transformer will be flange connected to the same and the same shall be located as close as desirable to the transformer. The details of transformer flanges for those transformers not being supplied under this package shall be given to the contractor for matching the connections. The switchboards fed from outdoor transformers of rating 1000kVA and above shall be connected through busducts. For transformers of 1000kVA rating, cable connection may also be acceptable in case of layout constraints. For lower rated transformers, the connection shall be through cables. Busduct connections wherever applicable shall be preferably in a straight line alignment. Adopter panels and dummy panels shall be provided wherever required.
4.25.00	CLEARANCES The minimum clearance in air between phases and between phases and earth for the entire run of horizontal and vertical busbars and bus-link connections at circuit-breaker shall be 25 mm. For all other components, the clearance between "two live parts", "a live part and an earthed part", shall be at least ten (10) mm throughout. Wherever it is not possible to maintain these clearances, insulation shall be provided by sleeving or barriers. However, for horizontal and vertical busbars the clearances specified above should be maintained even when the busbars are sleeved or insulated. All connections from the busbars up to switch / fuses shall be fully shrouded / insulated and securely bolted to minimize the risk of phase to phase and phase to earth short circuits.
5.00.00	**PROTOTYPE PANELS** In order to establish the compliance with the requirements of this technical specification, prototype panels shall be made and offered for the Employer's inspection and approval before the start of manufacturing of panels for this project. The exact configuration of such prototype panels shall be finalized during detailed engineering.
6.00.00	**CONSTRUCTIONAL DETAILS OF AC & DC FUSE BOARDS**
6.01.00	All fuse boards shall be metal enclosed, fixed type, non-compartmentalized construction, suitable for indoor/ outdoor mounting on wall or steel structure.
6.02.00	The fuse board frame shall be fabricated using suitable mild steel structures or pressed and shaped cold rolled sheet steel of thickness not less than 2.0 mm. The frames shall be enclosed by cold rolled sheet steel of thickness not less than 1.6 mm.
6.03.00	The fuse boards shall be provided with doors on the front. The doors shall preferably be in two halves with hinges at the extreme ends and locking facility at the centre.
6.04.00	Suitable Steel Reinforced EPDM /PU Foam gaskets shall be provided to make fuse boards completely dust and vermin-proof with a degree of protection of IP-52 for indoor and IP-54 for outdoor application, as per IS/IEC 60947.
6.05.00	Each DC fuse board shall comprise of the following : (a.) 1 no. 63 A switch as incomer (b.) 100 A fully insulated (PVC sleeved or epoxy coated) busbars.

CLAUSE NO.	TECHNICAL REQUIREMENTS
	(c.) 8 nos. 16A outgoing Fuse feeders.
	(d.) 1 no. auxiliary contactor for supply monitoring.
	(e.) 1 no. indicating lamp with resistor and blue coloured lens.
6.06.00	Each AC fuse board shall comprise of the following :
	(a.) 1 no. 63A TPN switch as incomer.
	(b.) 100 A, 3-phase, 4-wire, fully insulated (PVC sleeved or epoxy coated) busbars.
	(c.) 9 nos. 16 A single phase switch fuse units and 3 nos. 16 A TPN switch fuse units as outgoing feeders or alternatively 16 amps MCCB can be provided.
	(d.) 3 nos. indicating lamps with resistors and coloured lenses (R, Y, B) for incoming supply monitoring.
6.07.00	The fuses shall be mounted in an insulating fuse carrier and it shall be possible to replace the outgoing feeder fuses without disturbing the other feeders. The handle of incoming switch shall be mounted on the door of the fuse board, with padlocking facility in both 'ON' and 'OFF' positions. The outgoing feeder switches shall preferably be of rotary type.
6.08.00	Cable entry facilities shall be provided at bottom with removable gland plates of suitable thickness. However, top cable entry may be allowed in case of layout constraints. All incoming and outgoing cables shall be terminated on suitable terminal blocks.
7.00.00	**POWER BUSBARS AND INSULATORS**
7.01.00	All 415 V Switchboards, MCCs and ACDBs shall be provided with three phase and neutral busbars. Two separate sets of vertical busbars shall be provided in each panel of double front MCCs / DBs. Interleaving arrangement for busbars shall be adopted for switchboards with a rating of more than 1600A. DCDBs shall be provided with two (2) busbars. Entire busbar system shall be insulated with PVC sleeves. Busbar sleeves shall be compliant to UL224 (Extruded insulating tubing), CE/UL certified, having fire retardant properties and working temperature of 105^0C.
7.02.00	Vertical busbars of non-breaker panels shall be completely phase segregated by suitable insulating supports / walls made of fire-retardant, non-hygroscopic, track-resistant material to minimise the occurrence of arc faults.
7.03.00	All busbars and jumper connections shall be of high conductivity Aluminium alloy / Copper of adequate size.
7.04.00	The cross-section of the busbars shall be uniform throughout the length of switchboard section and shall be adequately supported and braced to withstand the stresses due to the specified short circuit currents. Neutral busbar short circuit strength shall be same as main busbars.
7.05.00	All busbars shall be adequately supported by non-hygroscopic, non-combustible, track-resistant and high strength sheet moulded compound or equivalent type polyester fibre glass moulded insulator. Separate supports shall be provided for each phase and neutral busbar. If a common support is provided, anti-tracking barriers shall be provided between the supports. Insulator and barriers of inflammable material such as Hylam shall not be accepted. The busbar insulators shall be supported on the main structure.
7.06.00	All busbar joints shall be provided with high tensile steel bolts, belleville / spring washers and nuts, so as to ensure good contacts at the joints. Non-silver plated busbar joints shall be

CLAUSE NO.	TECHNICAL REQUIREMENTS
	thoroughly cleaned at the jointed locations and suitable contact grease shall be applied just before making a joint. All bolts shall be tightened by torque spanner to the recommended value. The overlap of the busbars at each joint surface shall be such that the length of overlap shall be equal to or greater than the width of the busbar. All Copper to Aluminium joints shall be provided with suitable bimetallic washers.
7.07.00	All busbars shall be colour coded as per IS: 375.
7.08.00	The Contractor shall furnish calculations establishing the adequacy of bus bar sizes for specified current ratings.
8.00.00	**AUXILIARY BUSBARS AND CONTROL TRANSFORMERS**
8.01.00	**AC CONTROL SUPPLY BUSBAR**
	Each bus-section of all Switchgears and MCCs shall be provided with two (2) nos. 415V / 110V control transformers. The 110V AC control supply from the control transformers shall be run through the MCC by means of two sets of control supply busbars of electrolytic Copper. In case of one transformer failure, whole bus section can be fed through single transformer. The control supply to different modules shall be tapped individually from the control supply busbars.
8.02.00	**DC CONTROL SUPPLY BUSBARS**
	Electrically controlled circuit breaker boards shall be provided with DC control supply busbars. The manually controlled breakers shall also be provided with such busbars in case relays are provided. Each section of the switchboard shall be provided with a DC supply by the Contractor. The Contractor shall provide suitable terminals, switch-fuse etc. to receive the DC supply and distribute the same through above mentioned control busbars to the required modules of the respective section. The DC control supply bus of one section shall be coupled to the control supply of other section through a switch located in the bus-coupler breaker panel. The DC supply to the bus-coupler breaker may be given from any of the control buses. For Emergency Switchgear, two DC supplies shall be provided along with suitable diodes for deriving the control supply through diode auctioneering. Power Supply to Numerical Relay shall be an independent circuit with switch and fuse tapped from the panel DC supply. Exact scheme for segregation of switchgear & numerical relay DC supplies shall be finalized during detailed engineering.
8.03.00	**SPACE HEATER BUSBARS**
	Panel and motor space heaters shall be fed from separate AC auxiliary busbars running throughout the switchboard. The supply for these busbars shall be tapped from incomer, before the isolating switch/ circuit breaker. Incoming circuit to space-heater bus shall have an isolating switch, HRC fuse and neutral link of suitable rating. Suitable terminals shall also be provided to facilitate energisation of space-heater bus from outside during long shutdowns of unit / switch-board.
8.04.00	**CONTROL TRANSFORMERS**
	The control transformers shall be 415 V / 110 V with neutral point-earthed, of insulation class 'B' or better. The sizing of Control transformers shall be carried out by Contractor considering the actual load of power contactors, auxiliary contactors, indicating lamps and other equipment in the module circuit. An additional load of 15 watts should also be considered for each module, for remote auxiliary relays and lamps to be connected in the control circuit of modules. Contractor shall also ensure that control transformers are adequately designed for meeting the momentary loading requirements & the voltage drop during this condition shall not be more than 5%.

CLAUSE NO.	TECHNICAL REQUIREMENTS
9.00.00	**EARTH BUS AND EARTHING**
9.01.00	A galvanized steel / Copper / Aluminium earth bus shall be provided at the bottom of each panel and shall extend throughout the length of each switchboard. It shall be welded / bolted to the framework of each panel and breaker earthing contact bar. Vertical earth bus shall be provided in each vertical section which shall in turn be bolted / welded to main horizontal earth bus.
9.02.00	The earth bus shall have sufficient cross section to carry the momentary short circuit and short time fault current to earth, as indicated in "Technical Parameters", without exceeding the allowable temperature rise.
9.03.00	Suitable arrangements shall be provided at each end of the horizontal earth bus for bolting to Contractor's earthing conductors. The horizontal earth bus shall project out of the switchboard ends and shall have predrilled holes for this connection. All joint splices to earth bus shall be made through at least two bolts, and taps by proper lug and bolt connection.
9.04.00	All non-current carrying metal work of the switchboard shall be effectively bonded to the earth bus. Electrical conductivity of the whole switchgear enclosure framework and truck shall be maintained even after painting.
9.05.00	The carriage and breaker frame shall get earthed while being inserted in the panel and positive earthing of the breaker frame shall be maintained in all positions, i.e. SERVICE & ISOLATED, as well as throughout the intermediate travel.
9.06.00	Each module frame shall get engaged to the vertical earth bus before the disconnecting contacts on the module are engaged to the vertical busbars.
9.07.00	All metallic cases of relays, instruments and other panel-mounted equipment shall be connected to earth by independent stranded Copper wires of size not less than 2.5 sq. mm. All the equipment mounted on the door shall be earthed through flexible wire/braids. Insulation colour code of earthing wires shall be green. Earthing wires shall be connected to terminals with suitable clamp connectors, soldering is not acceptable. Looping of earth connections, which would result in loss of earth connections to other devices, when a device is removed, is not acceptable. However, looping of earth connections between equipment to provide alternative paths to earth bus is acceptable.
9.08.00	VT and CT secondary neutral point earthing shall be at one place only, i.e. on the terminal block. Such earthing shall be made through links so that earthing of one secondary circuit shall be removed without disturbing the earthing of other circuit.
9.09.00	All hinged doors having potential carrying equipment mounted on it shall be earthed by flexible wire/ braid. For doors not having potential carrying equipment mounted on it, earth continuity through scraping hinges/ hinge pins of proven design may also acceptable. The Contractor shall establish earth continuity at site also.
10.00.00	**Circuit Breakers**
10.01.00	Circuit breakers shall be three pole, air break, horizontal draw out type, and shall have fault making and breaking capacities as specified in "Technical Parameters". The circuit breakers which meet specified parameters of continuous current rating and fault making / breaking capacity only after provision of cooling fans or special device shall not be acceptable.
10.02.00	Circuit breakers along with its operating mechanism shall be provided with suitable arrangement for easy withdrawal. Suitable guides shall be provided to minimize misalignment of the breaker.
10.03.00	There shall be "SERVICE", "TEST" and "FULLY WITHDRAWN" positions for the breakers. In "Test" position the circuit breaker shall be capable of being tested for operation without energizing the power circuits i.e. the power contacts shall be disconnected, while the control circuits shall remain undisturbed. Locking facilities shall be provided so as to prevent

CLAUSE NO.	TECHNICAL REQUIREMENTS
	movement of the circuit breaker from the "SERVICE", "TEST" or "FULLLY WITHDRAWN" position. It shall be possible to close the door in "Test" position. The circuit breaker rack in and rack out from Service to Test, Test to Isolated position or vice-versa shall be possible only in the door closed position.
10.04.00	All circuit breakers shall be provided with "6 NO" and "6NC" potential free auxiliary contacts. These contacts shall be in addition to those required, for internal mechanism of the breaker and should be directly operated from breaker operating mechanism. In case the manufacturer does not have a proven arrangement for providing the required number of circuit breaker auxiliary contacts on the fixed portion of the cubicle, necessary electrically reset latched relays shall be provided complete with all wiring in series with service position limit switch contacts, for multiplying the circuit breaker mounted auxiliary contacts and provide 4 NO and 4 NC contacts. Separate limit switches, each having required numbers of contacts shall be provided in both "SERVICE" and "TEST" position of the breaker. All contacts shall be rated for making, continuously carrying and breaking 10 Amp at 240 V AC and 1 Amp (Inductive) at 240 V DC respectively.
10.05.00	Suitable mechanical indications shall be provided on all circuit breakers to show "OPEN", "CLOSE", "SERVICE ", "TEST" AND "SPRING CHARGED" positions.
10.06.00	Main poles of the circuit breakers shall operate simultaneously in such a way that the maximum difference between the instants of contacts touching during closing shall not exceed half a cycle of rated frequency.
10.07.00	All circuit breakers shall be provided with the following interlocks :
10.07.01	Movement of a circuit breaker between "SERVICE" and "TEST" position shall not be possible unless it is in open position. Attempted withdrawal of a closed circuit breaker shall preferably not trip the circuit breaker. In case the offered circuit breaker trips on attempted withdrawal as a standard interlock, it shall be ensured that sufficient contact exists between the fixed and draw out contact at the time of breaker trip so that no arcing takes place even with the breaker carrying its full rated current.
10.07.02	Closing of a circuit breaker shall not be possible unless it is in "SERVICE" position, "TEST" position or in "FULLY WITHDRAWN" position.
10.07.03	Circuit-breaker cubicles shall be provided with safety shutters operated automatically by the movement of the circuit breaker carriage, to cover the stationary isolated contacts when the breaker is withdrawn. It shall however be possible to open the shutters intentionally against pressure for testing purposes.
10.07.04	A breaker of particular rating shall be prevented from insertion in a cubicle of a different rating.
10.07.05	Circuit breakers shall be provided with coded key / electrical interlocking devices, as per requirements.
10.08.00	Circuit breaker shall be provided with anti-pumping relay and trip free feature, even if mechanical anti-pumping feature is provided.
10.09.00	Mechanical tripping shall be possible by means of front mounted Red "trip" push-button. In case of electrically operated breakers these push buttons shall be shrouded to prevent accidental operation.
10.10.00	Complete shrouding / segregation shall be provided between incoming and outgoing bus links of breakers. In case of bus coupler breaker panels the busbar connection to and from the breaker terminals shall be segregated such that each connection can be approached and maintained independently with the other bus section live. Dummy panels if required to achieve the above feature shall be included in the Contractor's scope of supply.
10.11.00	Circuit breaker shall be provided with Power operated mechanism as follows.

CLAUSE NO.	TECHNICAL REQUIREMENTS

1.	Power operated mechanism shall be provided with a universal motor suitable for operation on 240 V DC / 240 AC Control supply, with voltage variation from 198 V to DC to 242 V DC . Motor insulation shall be class "E" or better.
2.	The motor shall be such that it requires not more than 30 seconds for fully charging the closing spring at minimum available control voltage.
3.	Once the closing springs are discharged, after one closing operation of circuit breaker, it shall automatically initiate recharging of the spring.
4.	The mechanism shall be such that as long as power is available to the motor, a continuous sequence of closing and opening operations shall be possible. After failure of power supply at least one open-close-open operation shall be possible.
5.	Provision shall be made for emergency manual charging and as soon as this manual charging handle is coupled, the motor shall automatically get mechanically decoupled.
6.	All circuit breakers shall be provided with closing and trip coils. The closing coil shall operate correctly at all values of voltage from 187-242 V DC. The trip coil shall operate satisfactorily at all values of voltage from 154-242V DC /77 V-121 V DC
7.	Provision for mechanical closing of the breaker only in "Test" and "WITHDRAWN" positions shall be made. Alternately, the mechanical closing facility shall be normally made inaccessible; accessibility being rendered only after deliberate removal of shrouds.
8.	It shall not be possible to open the ACB panel door in breaker closed condition.

Note: The circuit breakers for DC applications shall have manually operated mechanism of spring charged, stored energy type. The closing operation of the circuit breaker shall charge the tripping spring. Necessary interlocks shall be provided to inhibit closing of the circuit breaker unless the closing spring is fully charged.

11.00.00 **TELESCOPIC TROLLEY**

Telescopic trolley or suitable arrangement shall be provided for maintenance of circuit-breaker module in a cubicle. The trolley shall be such that the top most breaker module can be withdrawn on the trolley and can be lowered for maintenance purpose. The telescopic trolley shall be such that all type, size and rating of breaker can be withdrawn /inserted of particular switchgear. The quantity of telescopic trolleys to be supplied shall be 1 No. per switchgear room.

12.00.00 **AIR BREAK SWITCHES**

12.01.00 Air break switches shall be of heavy duty, single throw, group operated, load break, fault make type when associated with fuses. All switches for motor circuits shall be of utilization category AC-23A with 1NO +1NC auxiliary contact, which shall be wired to the control circuit as shown in the schematic drawings. All switches for other outgoing feeders shall be of utilization category AC-22A. All switches for DC circuits shall be suitable for 240 V DC and shall be of DC-22 utilization category.

CLAUSE NO.	TECHNICAL REQUIREMENTS
12.02.00	Continuous current rating of the switches shall be selected from the 'Module Selection tables' for various feeders.
12.03.00	The combination of switch-fuse unit would be preferred. However, if separate switch and fuses are provided, switch shall be located before fuses.
12.04.00	The main switches shall be operable from outside the module door. The switch handle shall clearly indicate the position of switch. Switch operating handles shall be provided with padlocking facilities. However, incomer switches of switchboards shall be provided with padlocking facility in both 'ON' and 'OFF' positions.
12.05.00	Interlocks shall be provided such that the cubicle door will not open when the switch is in closed position and the switch will close only when the door is closed.
12.06.00	Switches and fuses for AC/DC control supply and heater supply wherever required, shall be mounted inside the cubicles. Toggle switch is not acceptable.
12.07.00	Even if a single phase feeder is required for certain applications, Contractor shall provide TPN switch, fuse-bases and cable/ link connections between switch/fuse and vertical busbars for all the three phases, so that changing from single phase feeder to three phase feeder is possible without any modification other than inserting fuses at site.
13.00.00	**MCCB**
13.01.00	MCCB shall be fixed type / part of withdrawable feeder module as per specification, three pole, air break type having trip free mechanism with quick make and quick break type contacts. MCCB shall have current limiting feature. MCCB of identical ratings shall be physically and electrically interchangeable. MCCB shall be provided with 1 NO and 1NC auxiliary contacts.
13.02.00	MCCB shall be provided with Microprocessor based inbuilt front adjustable releases (Overload & Short-circuit) and shall have adjustable Earth Fault protection unit also. The protection settings shall have suitable range to achieve the required time & current settings. LED indications shall also be provided for faults, MCCB status (on/off etc.).
13.03.00	MCCB terminals shall be shrouded and designed to receive cable lugs for cable sizes relevant to circuit rating. Extended cable terminal arrangement for higher size cable may also be offered. ON and OFF position of the operating handle of MCCB shall be displayed and the rotary operating handle shall be mounted on the door of the compartment housing MCCB. The compartment door shall be interlocked mechanically with the MCCB to prevent opening of the door unless the MCCB is in OFF position. MCCB shall be provided with padlocking facility to enable the operating mechanism to be padlocked. The MCCBs being offered shall have common / interchangeable accessories for all ratings like aux. switch, shunt trip, alarm switch etc. The MCCBs shall have the current discrimination up to full short circuit capacity and shall be selected as per manufacturer's discrimination table.
13.04.00	Auxiliary contacts of the MCCBs pertaining to critical feeders, to be decided during detailed engineering, shall be connected to the digital inputs available in the numerical relays of Incomer / Bus-coupler / Outgoing circuit breaker feeders, for integration into the numerical relay network.
14.00.00	**CONTROL AND SELECTOR SWITCHES**
14.01.00	Control and selector switches shall be of heavy duty, rotary type with escutcheon plates clearly marked to show the positions. The control & selector switches should be as per IS/IEC 60947 Part V section 1. The switches shall be of sturdy construction suitable for mounting on panel front. Switches with shrouding of live parts and sealing of contacts against dust ingress shall be preferred.
14.02.00	Ammeter and voltmeter selector switches shall have four stay put positions with adequate number of contacts for 3-phase 4-wire system. These shall have oval handles. Ammeter

CLAUSE NO.	TECHNICAL REQUIREMENTS
	selector switches shall have make before break type contacts to prevent open circuiting of CT secondary.
14.03.00	Contacts of the switches shall be spring assisted and shall be of suitable material to give a long trouble free service.
14.04.00	The contact ratings shall be at least the following :

1.	Make and carry, continuously, 10 A at 240 V DC and 110 V AC
2.	Breaking current at 240 V DC, 1 A (inductive)
3.	Breaking current at 110 V AC and 0.3 lagging p.f., 5A

15.00.00	**CONTACTORS**
15.01.00	Motor starter contactors shall be of air break, electromagnetic type rated for uninterrupted duty as per IS/IEC 60947 Part-4 Section- 1.
15.02.00	Contactors shall be double-break, non-gravity type and their main contacts shall be silver faced.
15.03.00	Direct-on-line contactors shall be of utilization category AC3. Reversing starters shall comprise of Forward and Reverse contactors mechanically and electrically interlocked with each other. These contactors shall be of utilization category AC4. DC contactors shall be of DC3 utilization category. For CHP conveyor motors, minimum rating of power contactors shall be 240% of full load current of the motors. For other CHP drives, minimum rating of power contactors shall be 160% of full load current of motor.
15.04.00	The number of normally open (NO) and normally closed (NC) auxiliary contacts of a contactor shall be as per requirement shown in the respective module drawings. It shall, however, be not less than 2NO+2NC.
15.05.00	Operating coil of contactors shall be of 110 V AC unless otherwise specified elsewhere. The contactor shall operate satisfactorily between 85% and 110% of the rated voltage. The contactor shall not drop out at 70% of the rated voltage but shall definitely drop out at 20% of the rated voltage.
15.06.00	Contactors for DC drives shall have a coil voltage of 240 V DC. DC operated contactor coil shall have an economy resistor and shall be suitable for satisfactory continuous operation at 187-242 V DC/ 93.5-121 V
16.00.00	**FUSES**
16.01.00	All fuses shall be of HRC cartridge fuse link type. Screw type fuses shall not be accepted. Fuses for AC circuits shall be rated for 80kA rms (prospective) breaking capacity at 415V AC and for DC circuits, 20kA rms breaking capacity at 240V DC.
16.02.00	Fuse shall have visible operation indicators. Insulating barriers shall be provided between individual power fuses.
16.03.00	Fuse shall be mounted on insulated fuse carriers, which are mounted on fuse bases. Wherever it is not possible to mount fuses on carriers, fuses shall be directly mounted on plug-in type of bases. In such cases one set of insulated fuse pulling handles shall be supplied with each switchboard.
16.04.00	Fuse ratings shall be selected by the Contractor from the 'Module Selection Tables' for various feeder ratings. However, the fuse ratings for motor feeders given in the 'Motor Module Selection Table' are indicative only, and the same shall be coordinated by the Contractor to achieve class-II protection coordination and also to match the motor characteristics. Switch rating shall in no case be less than the fuse rating.

CLAUSE NO.	TECHNICAL REQUIREMENTS
16.05.00	The Neutral links shall be mounted on fuse carriers which shall be mounted on fuse bases.
17.00.00	**Instrument Transformers**
17.01.00	All current and voltage transformers shall be of cast resin insulated type suitable for continuous operation at the temperature prevailing inside the switchgear enclosure, when the switchboard is operating at its rated condition and the specified ambient temperature. The class of insulation shall be 'E' or better.
17.02.00	Alternatively, current transformers with unbreakable, flame retardant, self-extinguishing Nylon casing of UL94 grade are also acceptable.
17.03.00	All instrument transformers shall be able to withstand the thermal and mechanical stresses resulting from the maximum RMS short circuit breaking and peak making current ratings of the associated switchgear.
17.04.00	All instrument transformers shall have clear indelible polarity markings. All secondary terminals shall be wired to separate terminals on an accessible terminal block where star point formation and earthing shall be done.
17.05.00	Current transformers may be multi or single-core type. All voltage transformers shall be single phase type.
17.06.00	The bus VTs shall be housed in a separate compartment. All VTs shall have readily accessible HRC current limiting fuses on both primary and secondary sides.
17.07.00	All CTs shall be provided with supports independent of busbar / busbar supports.
17.08.00	The CTs shall be located in such a way that they can be easily approached for maintenance without necessitating shut down of adjacent feeders.
18.00.00	**Numerical relays**
18.01.00	All circuit breaker feeders shall be provided with communicable numerical relays complying with IEC-61850, having protection, control, measurement and monitoring features. The relays shall be flush mounted on panel front with connections from the inside. These numerical relays shall be of types as proven for the application and shall be subject to Employer's approval. Numerical relays shall have appropriate setting ranges, accuracy, resetting ratio and other characteristics to provide required sensitivity. All equipment shall have necessary protections as detailed in the standard scheme drawings / module type descriptions.
18.02.00	Control of circuit breakers shall be carried out from PLC/DCS through hardwired control commands in the form of 24V DC signal. Preferably, binary input of all relays shall be configurable to accept 24V DC signals directly from PLC/DCS and no separate coupling relays shall be provided. The Local control console of the relay flush mounted on the switchgear would normally be used only for testing of circuit breaker in isolated position, and for tripping it in an emergency. Provision for closing & tripping of the circuit breaker locally from laptop through serial port shall be possible to facilitate commissioning activities. The basic control scheme of breaker feeders shall be developed using the programmable (soft) logics in the relay.
18.03.00	The numerical relay shall be capable of measuring and storing values of a wide range of quantities, events, faults and disturbance .

CLAUSE NO.	TECHNICAL REQUIREMENTS
18.04.00	All relays shall be rated for control supply voltage as mentioned elsewhere under parameters and shall be capable of satisfactory continuous operation between 80-120% of the rated voltage. Making, carrying and breaking current ratings of their contacts shall be adequate for the circuits in which they are used. Contacts for breaker close and trip commands shall be so rated as to be used directly used in the closing and tripping circuits of breaker without the need of any interposing / master trip relays. Threshold voltage for binary inputs shall be suitably selected to ensure avoidance of mal operation due to stray voltages and typically shall be more than 70% of the rated control supply voltage.
18.05.00	One minute power frequency withstand test voltage for all numerical relays shall at least be 2kV (rms).
18.06.00	Failure of a control supply and de-energization of a relay shall not initiate any circuit breaker operation.
18.07.00	Disturbance Record waveforms, event records & alarms shall be stored in Non-volatile memory and failure of control supply shall not result in deletion of any of these data.
18.08.00	All IEDs shall have freely programmable optically isolated binary inputs (BI) and potential free binary output (BO) contacts, the quantity of which shall be adequate to realize the associated interlocks / feedbacks. In case the offered IED does not have the required number of I/Os, the same can be achieved through external I/O device of same make complying with the requirement stated elsewhere in this specification.
18.09.00	All the numerical relays shall have communications on two ports, local front port for communication with laptop and one RJ45 port on IEC 61850. All the numerical relays shall have adequate processor memory for implementing the programmable scheme logic required for the realization of the protection / control schemes, in addition to the built in protection algorithms.
18.10.00	All Numerical relays shall have features for electrical measurements including voltage, current, power (active & reactive), frequency, power-factor and energy parameters.
18.11.00	Relays shall have event recording feature, recording of abnormalities and operating parameters with time stamping.
18.12.00	Master trip (86) and non-86 trips shall be software configurable to output contacts and no separate master trip relay shall be used.
18.13.00	All numerical relays shall have provision of both current (CT) and voltage (VT) inputs. Relays shall be suitable for both residually connected neutral CT input as well as CBCT input. Relays shall be suitable for CT secondary current of 1A. Motor relays shall have 4 CT inputs. Relays for Incomers, Bus-couplers & Ties shall have 4 CT inputs. All relays except incomers, ties and bus-couplers shall have 3Nos of VT inputs. Relays used in incomers, ties and bus couplers shall have provision of two sets of voltage inputs (3Nos for bus voltage & 1No. for line voltage) for the purpose of synchronization.

CLAUSE NO.	TECHNICAL REQUIREMENTS
18.14.00	All CT terminals on the relays shall be of fixed type suitable for connection of ring-type lugs to avoid any hazard due to loose connection leading to CT open-circuit. In no circumstances Plug-in type connectors shall be used for CT / VT connections.
18.15.00	All numerical relay shall have key pad / keys to allow relay settings from relay front. All hand reset relays shall have reset button on the relay front. Relay to be self or hand reset shall be software selectable. Manual resetting shall be possible from remote.
18.16.00	Relays shall have self-diagnostic feature with self-check for power failure, programmable routines, memory and main CPU failures and a separate output contact for indication of any failure.
18.17.00	Relays shall have at least two sets or groups of two different sets of adaptable settings. Relays shall have multiple IEC / ANSI programmable characteristics.
18.18.00	Design of the relay must be immune to any kind of electromagnetic interference. Vendor shall submit all related type test reports for the offered model along with the offer.
18.19.00	All cards / hardware of numerical relays shall be suitable for operation in Harsh Environmental conditions with respect to high temperature, humidity & dust.
18.20.00	Relay shall be immune to capacitance effect due to long length of connected control cables. Any external hardware, if required for avoiding mal operation of the relay due to cable capacitance shall be included as a standard feature.
18.21.00	All I/Os shall have galvanic isolation. Analog inputs shall be protected against switching surges, harmonics etc.
18.22.00	Numerical relays shall have two level password protections, one for read only and other for authorization for modifying the setting etc.
18.23.00	Numerical relays shall have feature for Time synchronization. The resolution of time synchronization shall be +/- 1.0 millisecond or better throughout the entire system.
18.24.00	Relays shall be suitable to accept both AC & DC supplies with range 110V or 220V with tolerance of 70 % to 120 % of rated voltage & shall be finalized during detailed engineering.
19.00.00	**Other Protections and Control functions in the Relays**
19.01.00	Trip circuit supervision shall be provided for all feeders to monitor the circuit breaker trip circuit both in pre-trip and post-trip conditions.
19.02.00	Schematics requiring auxiliary relays / timers for protection function shall be a part of numerical relay. The number of auxiliary relay and timer function for protection function shall be as required. Timer functions shall be programmable for on/off delays.
19.03.00	Bus no volt condition shall be configured to an output contact of the relay of incomers for suitably interfacing with PLC/DCS wherever required.
19.04.00	The numerical relay shall be able to provide supervisory functions such as trip circuit monitoring, circuit breaker state monitoring, VT and CT supervisions and recording facilities with post fault analysis.

CLAUSE NO.	TECHNICAL REQUIREMENTS
19.05.00	The numerical processor shall be capable of measuring and storing values of a wide range of quantities, all events, faults and disturbance recordings with a time stamping using the internal real time clock. Battery backup for real time clock in the event of power supply failure shall be provided.
19.06.00	At least 200 time tagged events / records shall be stored with time stamping. Details of at least 5 previous faults including the type of protection operated, operating time, all currents & voltages and time of fault.
19.07.00	Diagnostics Automatic testing, power on diagnostics with continuous monitoring to ensure high degree of reliability shall be shall be provided. The results of the self-reset functions shall be stored in battery back memory. Test features such as examination of input quantities, status of digital inputs and relay outputs shall be shall be available on the user interface.
19.08.00	Sequence of events shall have 1ms resolution at device level.
19.09.00	Measurement accuracy shall be 1 % for RMS Current and voltage. It shall be possible to carryout open / close operation of breakers from a laptop by interfacing from the relay front port during initial commissioning.
19.10.00	Circuit-breaker status, protection status, etc. required for control logics shall be hardwired to PLC/DCS. 4-20mA analog output (current signal) for use- in PLC/DCS shall be provided in all breakers. This may be provided as analog output from the Numerical relay or may be generated using a suitable CT & Current transducer. In case analog output is not available in the relay, the same may be achieved using external I/O device of same make complying with the requirement stated elsewhere in this specification. In addition, any other requirement of digital & analog signals for process controls shall be taken care of.
19.11.00	**TRAINING**
19.11.01	**Training workshop at site for Switchgear** Workshop Training at site shall aim for familiarization of Site Engineers for commissioning and day to day O & M of LT Switchgears. The scope shall include one number of LT Switchgear workshop and Training for a batch of 20 Engineers and a separate batch of 20 supervisors/technicians for two (2) days at Project site. One day shall be for class-room training & One day shall be for hands-on training on LT Switchgears. The workshop shall be organized before the commissioning of First LT Switchboard. Employer shall provide the required Infrastructure such as Training Conference room, Projection systems etc.
19.11.02	**Training workshop at site for Numerical Relay** Workshop Training at site shall aim for familiarization of Site Engineers for commissioning and day to day O & M of Numerical Relays and trouble shooting. The scope shall include one number of Numerical Relay workshops and Training for a batch of 20 Engineers at Project Site for 2 days at project site. One day shall be for class-room training & One day shall be for hands-on training on Numerical Relays. The workshop shall be organized before the

CLAUSE NO.	TECHNICAL REQUIREMENTS
	commissioning of First LT Switchboard. Employer shall provide the required Infrastructure such as Training Conference room, Projection systems etc.
20.00.00	**INDICATING INSTRUMENTS**
20.01.00	All indicating and integrating meters shall be flush mounted on panel front. The instruments shall be of at least 96mm square size with 90 degree linear scale and shall have an accuracy class of 1.0 or better. The covers and cases of instruments and meters shall provide a dust and vermin proof construction.
20.02.00	All instruments shall be compensated for temperature errors and factory calibrated to directly read the primary quantities. Means shall be provided for zero adjustment without removing or dismantling the instruments.
20.03.00	All instruments shall have white dials with black numerals & lettering. Black knife edge pointer shall be provided for meters.
20.04.00	Ammeters provided for motor feeders (for motors of rating ≥ 30kW & < 100kW) shall have a compressed scale at the upper current region to cover the starting current up to 6.0 times the CT primary current.
20.05.00	All motor feeders of rating ≥ 30 kW and < 110 kW shall be provided with Multifunction Digital Energy Meter with communication facility to display the current, voltage, power factor, power energy related data locally as well as communicate these for remote metering/audit/analysis purposes. These meters shall The technical specification for Digital indicating energy meter shall be as follows: a) Input Voltage:110VAC / 240VDC b) Input Current:1A c) Size:96X96 SQ.MM d) Power & Energy Accuracy: 1.0 e) Mounting: Flush mounting f) Type: True RMS 3-PHASE V,I, kW,PF & kWH indication g) 4 Digit, seven segment LED display/LCD display, with floating decimal h) Communication: In built RS 485 bus port i) Operating Frequency: 45 HZ-65HZ j) Dielectric Test: 2KV RMS for 1 minute k) Over Current: 10 times for 3 sec. l) Aux supply: 90V-300V AC/DC m) Compliance: EMC/EMI n) Field programmable CT ratio o) Analog Current Output (4-20 mA)

CLAUSE NO.	TECHNICAL REQUIREMENTS
21.00.00	**PUSH BUTTONS**
21.01.00	Push-buttons shall be of spring return, push-to-actuate type. Their contacts shall be rated to make, continuously carry and break 10 A at 110 V AC and 1 A (inductive) at 240 V DC.
21.02.00	All push buttons shall have two (2) normally open and two (2) normally closed contact, unless specified otherwise. The contact faces shall be of silver alloy.
21.03.00	All push-buttons shall be provided with integral escutcheon plates marked with its function.
21.04.00	The colour of the button shall as follows : Green — for motor START, breaker CLOSE , valve/ damper OPEN commands. Red — for motor trip, breaker open, valve / damper close commands. Black — for all annunciation functions, overload reset and miscellaneous commands including reverse for clinker grinder etc.
21.05.00	All push buttons on panels shall be located in such a way that Red push button shall always be to the left of Green push button. In case of clinker grinder etc. the push buttons would be black - red-green from lift to right.
21.06.00	All emergency push buttons shall have mushroom knobs.
22.00.00	**Indicating Lamps**
22.01.00	Indicating lamps shall be of CLUSTER LED type. The lamps shall have escutcheon plates marked with its function, wherever necessary.
22.02.00	Lamps shall have translucent lamp-covers of the following colours, as warranted by the application : **Red** — for motor ON, valve / damper OPEN, breaker CLOSE. **Green** — for motor OFF , valve / damper CLOSE, breaker OPEN. **White** — for motor AUTO TRIP. **Blue** — for all healthy conditions (e.g. control supply, and also for SPRING CHARGED"). **Amber** — for all Alarm Conditions (e.g. overload). Also for "SERVICE" and "TEST" position indications.
22.03.00	Bulbs and lamp covers shall be easily replaceable from the front of the cubicle. The method of mounting indicating lamp fittings on panels shall prevent their rotation under the action of lamp removal or replacements, reliance upon the tightness of ring nut for the purpose is not sufficient.
22.04.00	Indicating lamps should be located just above the associated push-button / control switches. Red lamps shall invariably be located to the right of green lamps. In case a white lamp is also provided, it shall be placed between the red and green lamps along the centre line of control

CLAUSE NO.	TECHNICAL REQUIREMENTS
	switch / push button pair. Blue and Amber should normally be located above the Red and Green lamps.
22.05.00	When associated with push-buttons, red lamps shall be directly above the green push-button and green lamp shall be directly above the red push button.
22.06.00	All indicating lamps shall be suitable for continuous operation at 90% to 110% of their rated voltage.
23.00.00	**Space Heater**
23.01.00	Space heaters shall be provided in the switchboards wherever the manufacturer considers them necessary and recommends their provision for preventing harmful moisture condensation.
23.02.00	The space heaters shall be suitable for continuous operation on 240 V AC, 50 Hz, single phase supply, and shall be automatically controlled by thermostats. Necessary switches and fuses shall be provided.
23.03.00	The circuit for each panel and motor space heater should have an isolating switch, HRC fuse and isolating link. In addition, the space heater circuit of each panel shall also have a thermostat of suitable rating.
24.00.00	**INTERNAL WIRING**
24.01.00	All switchboards shall be supplied completely wired internally upto the terminals, ready to receive external cables.
24.02.00	All inter-cubicle and inter-panel wiring and connections between panels of same switchboard including all bus wiring for AC and DC supplies shall be provided by the Contractor.
24.03.00	All auxiliary wiring shall be carried out with 650V grade, single core stranded Copper conductor, colour coded, PVC insulated wires. Conductor size shall be 1.5 mm^2 (min.) for control circuit wiring and 2.5 mm^2 (min) for CT and space heater circuits.
24.04.00	Extra flexible wires shall be used for wiring to devices mounted on moving parts such as hinged doors. The wire bunches from the panel inside to the doors shall be properly sleeved or taped.
24.05.00	All wiring shall be properly supported, neatly arranged, readily accessible and securely connected to equipment terminals and terminal blocks.
24.06.00	All internal wiring terminations shall be made with solderless crimping type tinned Copper lugs which shall firmly grip the conductor or an equally secure method. Similar lugs shall also be provided at both ends of component to component wiring. Insulating sleeves shall be provided over the exposed parts of lugs to the extent possible. Screw-less (spring loaded) / cage clamp type terminal shall also be provided with lugs.
24.07.00	Printed single tube ferrules marked to correspond with panel wiring diagram shall be fitted at both ends of each wire. The wire identification marking shall be in accordance with IS: 375. Red Ferrules should be provided on trip circuit wiring.

CLAUSE NO.	TECHNICAL REQUIREMENTS
24.08.00	Wiring for equipment, which are to be supplied by the Contractor and for which the Contractor has to provide mounting arrangement in his panels, shall also be provided by the Contractor, up to the terminal blocks.
24.09.00	All connections from vertical busbars for individual modules above 100 A shall be by Copper / Aluminium links only. The cable connections for modules less than 100 A shall be selected in such a way that there will not be any melting / shorting in case of a short circuit inside the module and the cable shall have current rating to carry the let through energy of the corresponding fuses in case of a fault. The insulation of the cable and its cross section shall be decided considering the high ambient temperature within the module. For all modules where use of cable is envisaged by the Contractor specific approval from the Employer regarding cable details are to be taken. For power wiring colour coded wire insulation / tapes shall be provided.
24.10.00	Wiring Duct shall be Halogen Free complying to 1) VDE 0472/815 or equivalent standard 2) UL94 flammability rating of V-0 for continuous use upto 95 degree Celsius and 3)RoHS (lead Free) Compliant.
25.00.00	**CONTROL TERMINAL BLOCKS**
25.01.00	Terminal blocks shall be 650V grade, 10Amps rated, made up of unbreakable polyamide 6.6 grade. The terminals shall be either screw type or screw-less (spring loaded) / cage clamp type with lugs. Marking on terminal strips shall correspond to the terminal numbering in wiring diagrams. All metal parts shall be of non-ferrous material. In case of screw type terminals the screw shall be captive, preferably with screw locking design.
25.02.00	Terminal blocks for CT and VT secondary leads shall be of stud type, made up of unbreakable polyamide 6.6 grade. They shall be provided with links to facilitate testing, isolation star / delta formation and earthing. Terminal blocks for CT secondary shall have the short circuiting facility. The terminals for remote ammeter connection etc. shall also be disconnecting type only. All metal parts shall be of non-ferrous material. Screws shall be captive.
25.03.00	In all circuit breaker panels MCC modules at least 10% spare terminals for external connections shall be provided and these spare terminals shall be uniformly distributed on all terminal blocks.
25.04.00	All terminal blocks shall be suitable for terminating on each side two (2) nos. stranded Copper conductors of size up to 2.5 sq. mm each, or alternatively, the terminal blocks shall have the possibility of double shorting space to facilitate looping. However for DDCMIS terminals shall be suitable for 1.5 mm^2 cable.
25.05.00	All terminals shall be numbered for identification and grouped according to the function. Engraved white-in-black labels shall be provided on the terminal blocks.
25.06.00	Wherever duplication of a terminal block is necessary it shall be achieved by solid bonding links.

CLAUSE NO.	TECHNICAL REQUIREMENTS
25.07.00	Terminal blocks shall be arranged with at least 100mm clearance between two sets of terminal blocks. The minimum clearance between the first row of terminal blocks and the associated cable gland plate shall be 250 mm.
25.08.00	DIN Rail shall conform to DIN EN 60715/ Equivalent Standard, with base metal of cold rolled low carbon steel according to DIN EN 10130/Equivalent Standard, surface coating /trivalent chromate passivation in accordance with EN 12329/ Equivalent Standard. Salt Spray Test withstand minimum 130hrs (while rust) and 300hrs (red rust). The DIN Rail shall be RoHS compliant.
26.00.00	**Power Cable Termination**
26.01.00	Cable termination compartment and arrangement for power cables shall be suitable for heavy duty, 1.1 kV grade, stranded Aluminium conductor, PVC/ XLPE insulated, armored / unarmored and PVC sheathed cables. The size and type of cable for individual modules shall, preferably, be as indicated in the 'Module Selection Tables'. All necessary cable terminating accessories such as supporting clamps and brackets, hardware etc. for cables shall be provided by the contractor to suit the final cable sizes.
26.02.00	All power cable terminals shall be of stud type and the power cable lugs shall be of tinned Copper solderless crimping ring type conforming to IS: 8309. All lugs shall be insulated/ sleeved.
27.00.00	**LOCAL PUSH BUTTON STATIONS**
27.01.00	The enclosure shall be provided with a hinged guard at the front, covering full length, to avoid inadvertent operation of push buttons Support structure for mounting the LPBS shall also be supplied by Contractor. The local push button stations shall be dust and vermin proof and shall have a degree of protection of IP -55 as per IS/IEC 60947. The DOP shall be IP-65 in case the same are located in dusty areas.
27.02.00	The local push button stations shall be metal enclosed, suitable for outdoor / indoor mounting on wall or steel structures. The enclosure shall be die-cast Aluminium or cold-rolled sheet steel of at least 1.6 mm thickness. LPBS shall be painted to shade no. RAL: 9002.
27.03.00	Local push button stations enclosure made of FRP (Fiberglass Reinforced Polymer) may also be offered. The FRP enclosure shall be of SMC Hot press Moulded, Halogen free and flame retardant as per UL94, V-0. The thickness of the FRP enclosure shall be at least 4mm. The colour of the FRP type LPBS shall be of RAL 7035 and the hinges, nuts & bolts shall be of Polyamide / Stainless Steel material.
27.04.00	The push button stations shall be suitable for bottom cable entry and shall be provided with removable undrilled gland plates or knockouts to facilitate termination of two numbers of control cables. Adequate space shall be available inside the push button station enclosure for terminating external cables directly on pushbutton terminals. Overall size of push button stations shall be subject to Employer's approval.
27.05.00	The push button station shall comprise of a latched type EMERGENCY STOP push button with two (2) NO and two (2) NC contacts.

CLAUSE NO.	TECHNICAL REQUIREMENTS

27.06.00 Support structure for mounting in local push button stations shall be supplied by the Contractor.

28.00.00 LOCAL MOTOR STARTERS

28.01.00 Local motor starters shall be suitable for manual switching of 415 V, 3-phase, squirrel cage motors rated up to 5.5 kW. They shall have constructional features similar to those specified for local push button stations.

28.02.00 Each starter shall comprise of :

1.	A 3-pole contactor, mechanically latched type.
2.	Start push button, coloured green.
3.	Stop push button, coloured red.
4.	Ambient temperature compensated, thermal over load relay with single phasing protection. The continuously variable relay setting range shall be suitable for the motor rating which shall be advised to the Contractor in due course. The relay shall trip the contactor.

28.03.00 The start push button, when pressed, shall preferably remain in depressed position and shall be released along with the contactor when the stop push button is pressed or when thermal overload relay operates.

28.04.00 Local starters shall be suitable for loop-in and loop-out of incoming cable and for one outgoing cable to motor. Support structure for mounting in local motor starters shall be supplied by the Contractor.

29.00.00 Name Plates and Labels

29.01.00 All Switchgears, MCCs, Distribution Boards, Fuse boards, all feeders, local push-button stations and local motor starters shall be provided with prominent, engraved identification plates. The module identification plate shall clearly give the feeder number and feeder designation. For single front switchboards, similar panel and board identification labels shall be provided at the rear switchgear also.

29.02.00 All name plates shall be of non-rusting metal or 3-ply Lamicoid, with white engraved lettering on black background. Letter size shall be of at least 10mm height.

29.03.00 Suitable stenciled paint mark shall be provided inside the panel/module for identification of all equipment in addition to the plastic sticker labels, if provided. These labels shall be positioned so as to be clearly visible and shall have the device number, as mentioned in the module wiring drawings.

29.04.00 Caution name plate "Caution Live Terminals" shall be provided at all points where the terminals are likely to remain live and isolation is possible only at remote end.

30.00.00 METAL ENCLOSED NON SEGREGATED PHASE BUSDUCT(AIR INSULATED)

30.01.00 Three phase and neutral metal enclosed non segregated phase busduct assemblies shall be supplied for incoming connections from the transformers to the switch boards and inter

CLAUSE NO.	TECHNICAL REQUIREMENTS
	connecting sections between switch boards, wherever applicable. The rating of the incoming and interconnecting busducts shall be same as the rating of the switchboard.
30.02.00	The enclosure shall be made of minimum 3 mm thick Aluminium alloy. The section of the busduct shall be rectangular. The design of the busduct enclosures shall be of sturdy construction such that it will withstand the internal or external forces resulting from the various operating conditions.
30.03.00	The entire busduct shall be designed for dust, vermin and weather proof construction. A suitable Aluminium sheet flange-protection hood shall be provided to cover all outdoor busduct enclosure joints to facilitate additional protection against rain water ingress. All horizontal runs of busducts shall have a suitable sloped enclosure top to prevent retention of water for both indoor and outdoor portion of busducts. Busduct enclosure shall have a degree of protection of IP-55.
30.04.00	The inside of the bus enclosure may be treated with black paint to enable efficient heat dissipation. The matt paint used shall be suitable for temperature experienced during continuous loading of the bus conductor. The busduct exterior paint shade shall be RAL 5012.
30.05.00	Flexible expansion joints for the enclosure shall be provided wherever deemed necessary by the Contractor. Necessary bonding shall be provided at the expansion joints if made of insulating materials.
30.06.00	Enclosures shall be provided with flanged ends with drilling dimensions to suit the flanges at the switchgear and transformer terminals. Any adapter boxes required for this purpose are in the Contractor's scope of supply. The flanges shall be provided with gaskets, nuts, bolts, etc. Details of the flanges provided on transformer ends will be furnished to the successful Contractor.
30.07.00	Suitable Inspection covers shall be provided for periodic inspection of insulators. Handle shall be provided on each inspection cover to facilitate easy lifting.
30.08.00	The Steel Reinforced EPDM /PU Foam gaskets shall be provided so as to satisfy the operating conditions imposed by temperature, weathering, durability etc. Flange gaskets shall be provided at the equipment terminal connections.
30.09.00	Necessary earthing arrangement as applicable shall be provided with clamps to receive station earthing bus. All accessories and hardware required for the earthing arrangement shall be provided by the Contractor. This shall be a GI strip of adequate size, continuously running along the busduct and shall be earthed at both ends. Busduct enclosures shall be bolted type.
30.10.00	The material of the conductor shall be Aluminium. The minimum clearance in air between phase to phase, phase to neutral and phase to earth for the entire run of busduct shall be 25 mm The bus bars shall be rated in accordance with the service conditions and the rated continuous and short time current ratings calculated for specific application / specified elsewhere.
30.11.00	All steel structures required for busduct support shall be hot dip galvanized.

CLAUSE NO.	TECHNICAL REQUIREMENTS
30.12.00	Space heaters shall be provided in the busduct wherever the manufacturer considers them necessary and recommends their provision for preventing harmful moisture condensation.
30.13.00	The space heaters shall be suitable for continuous operation on 240 V AC, 50 Hz single phase supply and shall be automatically controlled by thermostats. Necessary wiring upto junction boxes mounted on busduct and from junction boxes to switch boards shall be provided by the Contractor.
31.00.00	**LIGHTING / WELDING TRANSFORMERS** Each AC Lighting Distribution Board (LDB) shall be fed from 415V / 415V, 50kVA(minimum) isolating transformer & Each Welding Distribution Board (LDB) shall be fed from 415V / 415V, 100kVA isolating transformer. The lighting / welding transformer may, preferably, be located inside the LDB / Welding DB panel itself. Otherwise, the same shall be located by the side of respective LDB / Welding DB. Lighting / Welding transformers shall be dry type, natural air cooled with class B insulation or better. Impedance of lighting / Welding transformer shall be so selected that the fault level of lighting /Welding system shall be reduced to 3 to 5 KA. Lighting / Welding transformers shall be tested as per IS: 2026. Off-circuit tap changer with ± 2.5% and ± 5% tapping shall be provided. In case the transformers are not mounted inside the LDB panels, the same shall be housed in a separate 2 mm thick CR sheet steel enclosure with IP-42 degree of protection as per IS/IEC 60947. However, the transformer terminal box shall have IP-52 degree of protection.
32.00.00	**PAINTING** All sheet steel work shall be pre-treated, in tanks, in accordance with IS: 6005. Degreasing shall be done by alkaline cleaning. Rust and scales shall be removed by pickling with acid. After pickling, the parts shall be washed in running water. Then these shall be rinsed in slightly alkaline hot water and dried. The phosphate coating shall be "Class-C" as specified in IS: 6005. The phosphated surfaces shall be rinsed and passivated. After passivation, Electrostatic Powder Coating shall be used. Powder should meet requirements of IS 13871 (Powder costing specification). Finishing paint shade for complete panels excluding end covers shall be RAL9002 & RAL5012 for extreme end covers of all boards, unless required otherwise by the Employer. The paint thickness shall not be less than 50 microns. Finished parts shall be suitably packed and wrapped with protective covering to protect the finished surfaces from scratches, grease, dirt and oil spots during testing, transportation, handling and erection.
33.00.00	**GASKETS** The gaskets, wherever specified, shall be of good quality Steel Reinforced EPDM /PU Foam with good ageing, compression and oil resistance characteristics suitable for panel applications.
34.00.00	**TEMPERATURE –RISE** The temperature rise of the horizontal and vertical busbars and main bus links including all power draw-out contacts when carrying 90% of the rated current along the full run shall in no case exceed 55^0 C with silver plated joints and 40^0C with all other types of joints over an outside ambient temperature of 50^0C. The temperature rise of the accessible parts/external enclosures expected to be touched in normal operation shall not exceed 20^0C. The temperature rise of manual operating means shall not exceed 10^0C for metallic & 15^0C for

CLAUSE NO.	TECHNICAL REQUIREMENTS
	insulating material. Temperature rise for the busbars shall be carried out at 90% of the rated current. The above temperature rise limits are applicable for busducts also without any current derating.
35.00.00	**DERATING OF EQUIPMENTS**
	The Contractor shall ensure that the equipment offered will carry the required load current at site ambient conditions specified and perform the operating duties without exceeding the permissible temperature as per Indian Standards / Specification. Continuous current rating at 50^0C ambient in no case shall be less than 90% of the normal rating specified.
	The Contractor shall indicate clearly the derating factors if any employed for each component and furnish the basis for arriving at these derating factors duly considering the specified current ratings and ambient temperature of 50^0C.
36.00.00	**PROTECTION CO-ORDINATION**
	It shall be the responsibility of the Contractor to fully coordinate the overload and short circuit tripping of the circuit breakers with the upstream and downstream circuit breakers / fuses / motor starters, to provide satisfactory discrimination. Further the various equipment supplied shall meet the requirements of Type 2 class of Co-ordination as per IS: 8544.
37.00.00	**TESTS AND TEST REPORTS**
37.01.00	**GENERAL**
	(a.) All equipment to be supplied shall be of type tested design. The Contractor shall submit for Employer's approval the reports of all the type tests as listed in this specification and carried out not earlier than ten years prior to the date of bid opening. These reports should be for the tests conducted on the equipment similar to those proposed to be supplied under this contract and the test(s) should have been either conducted at an independent laboratory or should have been witnessed by a client.
	(b.) In case the Contractor is not able to submit report of the type test(s) conducted not earlier than ten years prior to the date of bid opening, or in case the type test report(s) are not found to be meeting the specification requirements, the Contractor shall conduct all such tests under this contract at no additional cost either at third party lab or in presence of client/Employer's representative and submit the reports for approval.
	(c.) All routine tests as per the specification and relevant standards shall be carried out.
37.02.00	The following type test certificates of LT Switchgear and MCC panels shall be submitted.

1)	Circuit breaker of each rating	
	a)	Test sequence 1
	b)	Combined test sequence (With Circuit breakers mounted inside the Switchgear panel)

CLAUSE NO.	TECHNICAL REQUIREMENTS

2)	Complete design verification of Switchgear/MCC Panels as per IEC 61439 Part-1, Annexure-D
3)	Internal arc test for Personnel and Assembly Protection as per IEC/TR 61641
4)	MCC modules of any three ratings, as selected by the Employer, for class - II protection Co-ordination.
5)	Test for single phasing protection feature on 3 nos. bimetallic thermal overload relay selected by Employer. The relay shall be tested for compliance with manufacturer's printed / declared characteristic curve.

37.03.00 For the following equipment the contractor shall submit the reports of all the type tests as per applicable standards and carried out not earlier than ten years prior to the date of bid opening. These reports should be for the tests conducted on the equipment similar to those proposed to be supplied under this contract and the test(s) should have been either conducted at an independent laboratory or should have been witnessed by a client. In case the Contractor is not able to submit report of the type test(s) conducted within last ten years from the date of bid opening, or in case the type test report(s) are not found to be meeting the specification requirements, the Contractor shall conduct all such tests under this contract at no additional cost to the Employer either at third party lab or in presence of client/Employer's representative and submit the reports for approval.

(a.) NUMERICAL RELAYS

(b.) LOCAL PUSH BUTTON STATION

(c.) LOCAL MOTOR STARTER

(d.) MCCB

37.04.00 Type test reports for the following tests on the model of the Numerical relays shall be submitted for Employer's review.

S. No.	TEST ITEMS	Standard
1	Dimensions of structure and visual inspection	IEC 60297-3-101
2	Functional requirements:	Relevant IEC 60255-100 series
	– Steady-state simulation	
	– Dynamic simulation	
3	Product safety requirements (including the dielectric tests and thermal short time rating)	IEC 60255-27
4	EMC requirements:	IEC 60255-26
	– Emission	
	– Immunity	
5	Energizing quantities:	
	– Burden	N/A
	– Change of auxiliary energizing quantity	IEC 60255-11

CLAUSE NO.	TECHNICAL REQUIREMENTS

6	Contact performance	N/A
7	Communication requirements	Relevant IEC protocol standards
8	Climatic environmental requirements:	IEC 60068-2-14, IEC 60068-2-1, IEC 60068-2-2, IEC 60068-2-78, IEC 60068-2-30, IEC 60255-27
	– Cold	
	– Dry heat	
	– Change of temperature	
	– Damp heat	
9	Mechanical requirements: – Shock	IEC 60255-21-1, IEC 60255-21-2, IEC 60255-21-3
	– Vibration	
	– Bump	
	– Seismic	
10	Enclosure protection	IEC 60529, IEC 60255-27

37.05.00 The type test reports once approved for any projects shall be treated as reference. For subsequent projects of NTPC, an endorsement sheet will be furnished by the manufacturer confirming similarity and "No design Change". Minor changes if any shall be highlighted on the endorsement sheet.

37.06.00 All routine tests as per the specification and relevant standard IS 8623 shall be carried out.

37.07.00 An indicative lists of tests / checks is mentioned as QA chapter. However, the manufacturer is to furnish a detailed Quality Plan indicating the practice and procedure along with relevant supporting documents.

37.08.00 All procedures for type tests shall be approved by Employer before commencement of type tests. However, the following points may be specifically noted.

1)	For temperature rise tests, the connection arrangement between the source and the test equipment shall be such that the temperature gradient in the connection piece of cable at a distance of one meter away from the test equipment shall be restricted to 5^0C.
2)	Milli-Volt drop test shall be done on switching devices before and after the type tests.
3)	Bolt tightness of busbar joints shall be checked with torque wrench before and after short time rating tests on the circuit breaker and MCC panels.

37.09.00 Routine checking to observe compliance to degree of protection, first numeral, on switchboard enclosures and busbar chambers shall be as under :

1) IP -4 X	It shall not be possible to insert a one mm dia. Steel wire into the enclosure from any direction, without using force.
2) IP-5X	It shall not be possible to insert a thin sheet of paper under gaskets and through enclosure joints.

CLAUSE NO.	TECHNICAL REQUIREMENTS
38.00.00	**ERECTION / INSTALLATION OF SWITCHBOARDS AND OTHER EQUIPMENTS**
38.01.00	Each equipment shall be installed in a neat, workman-like manner so that it is levelled, plumbed, squared and properly aligned and oriented. Tolerances shall be as established in Contractor's drawings or as stipulated by Employer. No equipment shall be permanently fixed down to foundations until the alignment has been checked and found acceptable by the Employer.
38.02.00	Contractor shall furnish all supervision, labour, tools, equipment, rigging materials, bolts, wedges, anchors, etc.., in proper time, required to completely install, test and commission the equipment.
38.03.00	Manufacturer's and Employer's instructions and recommendations shall be correctly followed in handling, setting, testing and commissioning of all equipment.
38.04.00	Contractor shall move all equipment into the respective rooms through the regular door or openings specifically provided for this purpose. No part of the structure shall be utilised to lift or erect any equipment without prior permission of Engineer.
38.05.00	All switchboards shall be installed in accordance with Indian Standard, IS: 3072, and Employer's instructions.
38.06.00	Switchboard panels shall be installed on concrete floor or supported on steel channel / edge angle in concrete trenches. The Contractor shall provide steel insert plates in the concrete floor and / or steel channels / edge angle on the trenches as applicable. The base frame of switchboards shall be welded to the insert plates by the Contractor. The Contractor shall be required to install and align the panels using suitable metallic shims before welding the base frame. In joining shipping sections of switchboards together, adjacent housing of panel sections or flanged throat sections shall be bolted together after alignment has been completed.
38.07.00	Contractor shall take utmost care in handling instruments, relays and other delicate mechanisms. Wherever the instruments and relays are supplied separately they shall be mounted only after the associated panels have been erected and aligned. the blocking materials employed for safe transit of instruments and relays shall be removed after ensuring that panels have been completely installed and no further movement of the same would be necessary. Any damage shall be immediately reported to Engineer.
38.08.00	Equipment furnished with finished coats of paint shall be touched up by Contractor if their surface is spoiled or marred during erection / commissioning.
38.09.00	The room and floor finishing work would be done after erection of the panels and the Contractor shall suitably cover up the panels to protect them from injury and marring of finish.
39.00.00	**COMMISSIONING CHECKS / TESTS**
39.01.00	After installation of panels, power and control wiring and connections, Contractor shall perform operational tests on all switchboards, to verify proper operation of switchboards / panels and correctness of all equipment in each and every respect.

CLAUSE NO.	TECHNICAL REQUIREMENTS
39.02.00	The Contractor shall carry out the following commissioning checks, in addition to other checks and tests recommended by the manufacturers.
39.03.00	GENERAL
	(a.) Check name plate details according to the approved drawings.
	(b.) Check for physical damage.
	(c.) Check tightness of all bolted connections, by torque wrench.
	(d.) Check earth connections.
	(e.) Check cleanliness.
	(f.) Check all moving parts for proper lubrication.
39.04.00	Circuit Breakers
	(a.) Check alignment of breaker truck for free movement.
	(b.) Check correct operation of shutters.
	(c.) Check control wiring for correctness of connections, continuity And IR values.
	(d.) Manual operation of breakers completely assembled.
	(e.) Closing /opening operation, manually and electrically.
	(f.) Trip free and anti-pumping operation.
	(g.) I.R. values of contacts.
	(h.) Contact resistance.
	(i.) Check on spring charging motor, correct operation of limit switches and time or charging.
	(j.) All functional checks
	(k.) Breaker closing and tripping time, if required.
39.05.00	Current Transformers
	(a.) Visual inspection.
	(b.) IR Value
	(c.) Ratio check.
	(d.) Magnetising current.
	(e.) Wiring connection.
	(f.) Spare CT cores, if any, to be shorted and earthed
39.06.00	Voltage Transformers

CLAUSE NO.	TECHNICAL REQUIREMENTS
	(a.) Visual inspection. (b.) IR Value (c.) Ratio check (d.) Magnetising current (e.) Line connection as per connection diagram
39.07.00	Cubicle Wiring (a.) Check all switch developments (b.) Each wire shall be traced by continuity tests and it shall be ensured that the wiring is as per relevant drawing. All inter-connections between panels / equipment shall be similarly checked. (c.) IR Value of all the wires shall be checked to earth. (d.) Functional checking of all control circuit e.g., closing, tripping, control, interlock, supervision and alarm circuit.
39.08.00	Relays 1. Check connections and wiring. 2. IR Value to be checked for a) all terminals to body. b) AC to DC terminals. 3. Check operating characteristics by secondary injection. 4. Check minimum pick up voltage of DC coils. 5. Check operation of electrical / mechanical targets. 6. Relay settings. 7. Check CT and VT connections with particular reference to their polarities.
39.09.00	Meters (a.) Visual inspection. (b.) Check IR Value of all insulated partitions. (c.) Check CT and VT connections with particular reference to their polarities for power type meters. (d.) Calibration.

CLAUSE NO.	TECHNICAL REQUIREMENTS
40.00.00	**AC MODULES DESCRIPTION**
40.01.00	**Module type DAE (Circuit Breaker Module)** (a.) One (1) Triple-pole circuit breaker, complete with all accessories and power operated mechanism, as specified. (b.) Three (3) Current transformers for Protection and metering. (c.) One (1) DC isolating Switch (d.) Six (6) HRC Control fuses. (e.) Numerical relay for the following: • Short Circuit Protection • Earth Fault Protection • Over Load protection • Energy Metering • Current and Voltage metering • Trip Circuit Supervision • CB Monitoring • Synchronizing Check feature
40.02.00	**Module Type DAET (Circuit Breaker Incomer From Transformer)** Similar to module type DAE; but with additional PS Class Current transformers for Restricted Earth Fault Protection. The Numerical relay shall have provision for REF protection in addition to the features listed against module type DAE.
40.03.00	**Module Type CC (Contactor Changeover Between Two In Coming Supplies)** (Note: Main and Reserve incomers shall be housed in separate draw-out modules, located in different panels.) The draw-out modules shall be provided with service position limit switch having 2 NO+2NC contacts. **Main Incomer** One (1) Triple pole load break isolating switch . One (1) Triple pole contactor with coil suitable for 415 V AC. Two (2) Auxiliary contactors with coil suitable for 415 V AC. One (1) Indicating lamp with resistor and coloured lens suitable for 415 V AC. Three (3) HRC control fuses.

CLAUSE NO.	TECHNICAL REQUIREMENTS
	Reserve Incomer
	One (1) Triple pole load break isolating switch
	One (1) Triple pole contactor with coil suitable for 415 V AC.
	One (1) Indicating lamp with resistor and coloured lens suitable for 415 V AC.
	Two (2) HRC control fuses.
40.04.00	**Module Type CS (AC Control Supply Module)**
	(Note: Module type CS will be of non-draw-out type)
	Two (2) 415/110 V control transformers.
	Four (4) 110V auxiliary relays.
	Two (2) Earth links.
	Eight (8) HRC Control fuses.
	Two (2) Selector switches
40.05.00	**Module Type DG (Circuit Breaker Incomer From DG Set)**
	(a.) One (1) Triple-pole circuit breaker, complete with all accessories and power operated mechanism, as specified.
	(b.) Three (3) Current transformers for protection & metering.
	(c.) One (1) DC isolating Switch
	(d.) Six (6) HRC control fuses
	(e.) Numerical relay for the following:
	• Differential protection
	• Over Load protection
	• Reverse Power Protection
	• DG Neutral displacement
	• Energy Metering
	• Current and Voltage metering
	• DG Monitoring
40.06.00	**Module Type E/E1/E2 (Switch Fuse Module/MCCB)**
	(a) One (1) Triple pole switch-fuse unit with three pole isolating switch and three / one / two HRC fuses for E/E1/E2 modules, respectively.
	(b) One (1) Neutral link.

CLAUSE NO.	TECHNICAL REQUIREMENTS
	(c) One (1) 3 pole MCCB (for rating 100A and above)
40.07.00	**Module Type G1 (VT Module with Under Voltage / No Volt Relay)**
	(a.) Three (3) 415/√3 / 110/√3 V single phase voltage transformers, mounted on a common draw-out chassis
	(b.) Three (3) HRC fuses for VT primary.
	(c.) Three (3) HRC control fuses.
40.08.00	**Module Type H (Isolating Switch Module)**
(a)	One (1) Triple pole load break isolating switch
(b)	One (1) Neutral link
40.09.00	**Module type K1 (Non Reversible Motor Rated Below 30 kW Controlled from MCC)**
	(a) One (1) Triple pole fuse switch unit with three pole load break isolating switch and three HRC fuses.
	(b) One (1) Triple pole contactor.
	(c) One (1) Bimetallic thermal overload relay with single phasing preventer. For motor with high starting time, heavy duty overload relay shall be provided.
	(d) Two (2) Push buttons.
	(e) Three (3) Indicating lamps with resistors and coloured lenses.
	(f) One (1) HRC control fuse.
	(g) One (1) Control link.
40.10.00	**Module Type K11 (Non reversible Motor Rated 30kW to 200kW Controlled from MCC)**
	Similar to module type K1 but with the following additions:
	One (1) Current transformer for metering.
	One (1) Ammeter
	One (1) Single-pole switch and fuse for motor space heater.
40.11.00	**Module type DK2 (Non Reversible Motor rated below 30kW Controlled from DDCMIS)**
	(a) One (1) Triple pole switch fuse unit with three pole load break Isolating switch and three HRC fuses.
	(b) One (1) Triple pole contactor.
	(c) One (1) Bimetallic thermal overload relay with single phasing preventor. Modules marked with * (DK2* / PK2*) shall not have this relay. For

CLAUSE NO.	TECHNICAL REQUIREMENTS
	motor with high starting time, heavy duty overload relay shall be provided. (d) Three (3) Indicating lamps with resistors and coloured lenses. (e) One (1) HRC control fuse. (f) One (1) Control link (g) One (1) Auxiliary contactor (h) Two (2) Coupling relays suitable for 24V DC. (i) One (1) digital energy meter with analog output of current (4-20 mA) for CHP dust suppression motors.
40.12.00	**Module Type DK21 (Non Reversible Motor rated 30kW to up to 110KW (* See Remark) controlled from DDCMIS).** **(*) Remark : For CHP Motors –upto 160 KW** (a) Similar to module type DK2 but with the following additions : (b) Three (3) Current transformers for metering. (c) One (1) Ammeter (for motors of rating ≥ 30kW & < 110kW) (d) One (1) Single-pole switch and fuse for motor space heater. (e) One (1) Digital Energy Meter with Analog output of Current (4-20 mA) (for motors of rating ≥ 30kW & < 110kW)
40.13.00	**Module Type DN1 (Reversible Motor Controlled from DDCMIS)** (a.) One (1) Triple pole fuse switch unit with three pole load break solating switch and three HRC fuses. (b.) Two (2) Triple pole mechanically interlocked, forward / reverse contactors. (c.) One (1) Bimetallic thermal overload relay with single phasing preventor. (d.) One (1) Indicating lamp with resistor and coloured lens. (e.) One (1) HRC control fuse (f.) One (1) Control link (g.) One (1) Auxiliary contactor **(h.)** Two (2) Coupling relays suitable for 24V DC.
40.14.00	**Module Type VM (Voltmeter Module)** (a.) Three (3) HRC fuses. (b.) One (1) Voltmeter (0-500 V.) (c.) One (1) Four position voltmeter selector switch

CLAUSE NO.	TECHNICAL REQUIREMENTS
	(d.) One (1) 415 V auxiliary contactor with 2 NO + 2 NC contacts.
	(e.) One (1) Voltage transducer with output of 4-20mA between R & Y phases
40.15.00	**Module Type DM (Circuit Breaker (DDC /PLC Controlled) Motor Feeder for motor rated 110 KW & above (except for CHP motors).**
	(a.) One (1) Triple-pole circuit breaker, complete with all accessories and power operated mechanism, as specified.
	(b.) Three (3) Current transformers for Protection and metering.
	(c.) One (1) DC isolating Switch
	(d.) Six (6) HRC Control fuses.
	(e.) One (1) Single-pole switch and fuse for motor space heater
	(f.) Numerical relay for the following:
	Short Circuit Protection (50)
	Thermal Over Load protection(51I)
	Earth fault Protection(50N)
	Negative sequence Protection(46)
	Restart inhibit protection(49)
	Locked Rotor Protection
	Energy Metering
	Current and Voltage metering
	Trip Circuit Supervision
	CB Monitoring
41.00.00	**DC MODULES DESCRIPTION**
41.01.00	**Module Type -CH (Incomer)**
	(a) One (1) Double pole, 250 V DC fuse -switch unit
41.02.00	**Module Type - DC**
	(a.) One (1) Double pole 250V DC switch / circuit breaker with 2NO+2NC auxiliary contacts.
41.03.00	**Module Type - HD (DC Isolating Switch / Circuit - Breaker Module)**
	(a.) One (1) Double pole , 250 V DC switch isolator / circuit breaker

CLAUSE NO.	TECHNICAL REQUIREMENTS

41.04.00 **Module Type-S (DC Metering and Protection Module)**

(a.) One (1) Voltmeter, 0-300V DC

(b.) One (1) Three position voltmeter selector switch

(c.) One (1) Instantaneous under voltage relay (27) with a setting of 95% of 240V DC. The resetting ratio of relay should not be more than 1.05.

(d.) One (1) Instantaneous over voltage relay (59) which shall operate at 110% of 240 V DC. The resetting ratio of relay should not be less than 0.95.

(e.) One (1) Earth leakage relay having adjustable pick up range between 3 to 7mA. The relay shall be suitable for 240V / 50V DC and 240V AC auxiliary supply.

(f.) Two (2) Indicating lamps with resistors & coloured lenses, one each for 'Earth fault' and 'DC supply failure ' indications.

(g.) Three (3) HRC control fuses.

(h.) One (1) Neutral link

41.05.00 **Module Type -X (DC Isolating Switch Fuse Module)**

(a.) One (1) Double pole, 250 V DC fuse switch unit with two HRC fuses.

42.00.00 SELECTION TABLES

42.01.00 **Feeder Module, Other than Motor Selection Table (415 V AC)**

Sl. No.	Feeder Rating (Amp.)	Switch/MCCB Rating (Amp.)	Fuse Rating (Amp.)
1.	0-16	16	16
2.	17-32	32	32
3.	33-45	63	63
4.	46-63	63	63
5.	64-99	100	100
6.	100	100A MCCB	
7.	101-160	160A MCCB	
8.	161-250	250A MCCB	
9.	251-400	400A MCCB	
10.	401-1120 (Breaker)		
11.	1121-1680 (Breaker)		

CLAUSE NO.	TECHNICAL REQUIREMENTS

42.02.00 **Motor Module Selection table**

Sl. No.	Motor rating kW	Max. Motor Amp.	Switch rating Amp.	Fuse rating Amp.	Contactor rating Amp.
1.	1.1-1.5	3.5	16	6/16	16
2.	1.6.3.0	7	32	20	16
3.	3.1-5.5	11	32	32	16
4.	5.6-7.0	14.4	63	50	32
5.	7.1-13.0	27.3	63	63	32
6.	13.1-24.0	45	125	80/100	63
7.	24.1-37.0	70	125	125	70 (upto 30kW) 100 (above 30kW)
8.	37.1-55.0	100	250	160	100 (upto 40kW) 160 (upto 55kW)
9.	55.1-80.0	150	250	200	200
10.	80.1-100	180	As per selected fuse	Suitable for type-II	225
12.	110.0-200.0	CIRCUIT BREAKER			

42.03.00 **Switch Fuse Module Selection Table (220 V DC)**

For all 220 V DC modules other than for motors, the ratings of switches fuses and cable termination shall be selected from the following table

Sl. No.	Feeder rating Amp.	Switch rating Amp.	Fuse rating Amp.
1.	0-6	10	6
2.	6-10	16	10
3.	10-14	16	16
4.	14-19	32	32
5.	19-32	32	32
6.	32-53	63	63

CLAUSE NO.	TECHNICAL REQUIREMENTS

7.	53-81	100	100
8.	81-114	125	125
9.	114-125	250	250
10.	215-340	400	400
11.	340-560	600	600
12.	560-1000	Circuit Breaker	
13.	1000-1400	Circuit Breaker	

43.00.00 **COMMISSIONING OF LT SWITCHGEARS**

Commissioning of LT switchgears at site shall only be carried out either by the switchgear manufacturer himself or under the supervision of the switchgear manufacturer.

44.00.00 **RESPONSIBILITY OF THE ASSOCIATE/COLLABORATOR (APPLICABLE IF LT SWITHCHGEAR IS SUPPLIED THROUGH PROVENNESS CRITERIA: ROUTE-2):**

The Associate/Collaborator (as applicable) for sourcing of LT Air Circuit Breaker shall be fully responsible and accountable for the item supplied and its compliance to the specification requirements.

The Associate/Collaborator (with respect to his manufactured and supplied LT Air Circuit Breaker) shall:

i) Participate in the Inspection of the LT Switchgears at Switchgear Supplier's Works, if required by Employer.

(ii) Participate in Technical Co-ordination Meetings (TCMs) from time to time during detailed engineering, if required.

(iii) Participate in Site Testing and Commissioning of LT Switchgears, if required.

(iv) Participate/address/resolve the issues raised during Contract Execution Period.

44.00.00 **Insulating Mat**

Insulating mat supplied for laying in front of LT Switchgears in switchgear rooms shall be as per IS:15652.

ELEVATOR ELECTRICAL

CLAUSE NO.	TECHNICAL REQUIREMENTS
	ELEVATORS (ELECTRICALS)
1.00.00	**CODES AND STANDARDS**
1.01.00	All standards, specifications and codes of practice referred to herein shall be the latest editions including all applicable official amendments and revisions. In case of conflict between this specification and those (IS codes, standards, etc.) referred to herein, the former shall prevail. All work shall be carried out as per the standards/ codes as applicable.
2.00.00	**Electric motor:** The driving motors shall conform to IEC 60034 and suitable for the Variable Voltage Variable Frequency (VVVF) application. All motors shall be squirrel cage induction type, suitable for operation at 415V (+/- 10% variation) , 3 phase, 3 wire, 50HZ (+3% to -5% variation) supply. Motors shall be provided with **thermal class 130(B) or better insulation**
3.00.00	**CAR ELECTRICAL ACCESSORIES** The following accessories shall be provided : i) LED light fittings for illumination level of 100 lux on car floor. ii) Portable light and alarm bell with battery and charger ventilation fan with control. iii) Car control station with position indicator inside the car and at landing platforms (both visual and audio). iv) Emergency stop switch. v) 5/15A, 3 pin plug socket with switch on top of lift car. vi) Hand free speaker telephone set connected to plant network. vii) AUTOMATIC RESCUE DEVICE (ARD)-(BATTERY DRIVE) : Contractor to provide a modern Advanced electronic drive system of “RESCUING Passenger Trapped in a ELEVATOR”. viii) EMERGENCY SAFETY DEVICES : The lift shall be provided with safety Device attached to the lift car frame and placed beneath the car. The safety device shall be capable of stopping and sustaining the lift car up at governor tripping speed with full rated load in car.
4.00.00	**OPERATIONAL REQUIRMENTS:** a. Contractor shall provide car operating panel with luminous buttons, car position indication in car (both visual and audio) combined with direction arrows, overload warning indicator, battery operated alarm bell and emergency light and fan & hands free speaker telephone set with suitable battery, charger & controls. b. Contractor shall provide emergency indicator to indicate the location of elevator in case of elevator being stuck up between the floors through automatic flashers (both audio & visual).

CLAUSE NO.	TECHNICAL REQUIREMENTS
	c. Contractor shall provide electronic door detector (Infra red curtain type). d. Digital hall position indicator at all floors, tell lights at all floors shall also be provided by the Contractor. e. For facilitating the movement of visually & hearing impaired persons, hall lantern and car arrival chimes shall be provided f. All fixtures shall be in stainless steel face plates. g. Push buttons shall be fixed in the car for holding the doors open for any length of the time required. h. All other safety/protection/operation interlocks as required by IS:14665 (latest edition).
4.00.00	**POWER SUPPLY** Each elevator shall be provided with a separate three phase, three wire 415V feeder of adequate rating
5.00.00	**Controls:** The controls shall be Variable Voltage and Variable frequency type and shall provide smooth and constant acceleration and retardation under all conditions of operation . Suitable control panel shall be provided in the machine room.
6.00.00	**Cables and wiring:** All the cables except trailing cables shall be as per IS:1554-1 or IS-7098-I. the PVC outer sheath of these cables shall be flame retardant, low smoke (FRLS) type with the following FRLS properties. a) Oxygen index of min. 29 (as per IS:10810 Part-58) b) Acid gas emission of max. 20% (as per IEC-754-I). c) Smoke density rating shall not be more than 60% (as per ASTMD-2843). The circular trailing cables shall be either in accordance with IS 4289 Part-I (Elastomer insulated) or IS-4289 Part-II (PVC insulated). The flat type trailing cables if offered shall be in accordance with IEC-60227-6. All wiring / cabling between the equipments in the lift machine room and that between the machine room and equipments in the lift well and at the landings shall be wired in HDP conduits/ galvanized steel conduits to be supplied by the contractor. Alternatively armored cables may be used.
7.00.00	**Earthing:** The elevator structures and all Electrical equipment, including metal conduits shall be effectively earthed with the earth conductors provided in the machine room as per IS: 3043.

SUB-SECTION-II-E15

LIGHTING

CLAUSE NO.	TECHNICAL REQUIREMENTS
1.00.00	**GENERAL**
1.01.00	This specification covers the general description of design, manufacture and construction features, testing, supply, installation and commissioning of the Lighting system equipment.
2.00.00	**CODES AND STANDARDS**
2.01.00	All standards and codes of practice referred to herein shall be the latest edition including all applicable official amendments & revisions as on date of bid opening. In case of conflict between this specification and those (IS codes, standards etc.) referred to herein, the former shall prevail. All work shall be carried out as per the following standards & codes.
2.02.00	Lighting Fixtures and Accessories
	IS:1913 General and safety requirements for luminairies.
	IS:2148 Flame proof enclosures of electrical apparatus.
	IS:418 Tungsten filament general service electric lamps.
	IS:1258 Bayonet lamp holders.
	IS:1534 Ballast for fluorescent lamps.
	IS:1569 Capacitors for use in tubular fluorescent, high pressure mercury vapour and low pressure sodium vapour discharge lamp circuit.
	IS:1777 Industrial luminaire with metal reflectors.
	IS:2215 Starters for fluorescent lamps.
	IS:2418 Tubular fluorescent lamps for general lighting services.
	IS:3323 Bi-pin lamp holders for tubular fluorescent lamps.
	IS:3324 Holders for starters for tubular fluorescent lamps.
	IS:4013 Dust-tight electric lighting fittings.
	IS:8224 Electric Lighting fittings for Division 2 areas.
	IS:10276 Edison screw lamp holders.
	IS:10322 Luminaires.
	IS:13021 AC Supplied Electronic Ballasts for tubular fluorescent lamps.
2.03.00	Lighting Panels, Switch-boxes, Receptacles and Junction Boxes
	IS:2147 Degree of protection provided by enclosures for low-voltage switchgear and control gear.
	IS:1293 Plugs & socket outlets of rated voltage upto and Including 250volts & rated current upto and including 16 Amps.

CLAUSE NO.	TECHNICAL REQUIREMENTS
	IS:2551 Danger notice plates.
	IS:13947 Low voltage switchgear and controlgear
	IS:3854 Switches for domestic and similar purposes.
	IS:6875 Control switches (switching devices for control and auxiliary circuits including contactor relays) for voltages upto and including 1000 V AC and 1200 V DC.
	IS:13703 Low voltage fuses for voltages not exceeding 1000V AC or 1500 V DC.
2.04.00	**Conduits, Pipes and Accessories**
	IS:2667 Fittings for rigid steel conduit for electrical wiring.
	IS:3837 Accessories for rigid steel conduits for electrical wiring.
	IS:9537 Conduits for electrical installations.
2.05.00	**Lighting Wires/Cables**
	IS:694 PVC insulated cables for working voltages upto and including 1100 V
	IS:3961 Recommended current ratings for cables.(PVC Insulated and PVC sheathed heavy duty cables and light duty cables).
	IS:8130 Conductors for insulated electric cables and flexible cords.
	IS:10810 Methods of tests for cables.
2.06.00	**LED Luminaries**
	16101:2012 General Lighting. LEDs and LED modules Terms and definitions
	16102(Part 1):2012 Self Ballasted LED Lamps for General Lighting Services. Part-1 Safety Requirements.
	16102(Part 2):2012 Self Ballasted LED Lamps for General lighting Services. Part-2 Performance Requirements.
	16103(Part I):2012 LED modules for General lighting Safety Requirements.
	15885(Part 2/Sec. 13) :2012 Lamp control gear Part 2 particular Requirements Section 13 d.c. or a.c. Supplied Electronic control gear for LED modules
	16104:2012 d.c. or a.c. Supplied Electronic control gear for LED modules - Performance Requirements.
	16105:2012 Method of Measurement of Lumen maintenance of Solid-state Light (LED) Sources.

CLAUSE NO.	TECHNICAL REQUIREMENTS	
	16106:2012	Method of Electrical and photometric Measurements of Solid State Lighting (LED) Products
	16107:2012	Luminaires Performance
	16108:2012	Photobiological safety of Lamps and Lamp Systems
	IS 513	Cold rolled low carbon steel sheets and strips
	IS 12063	Classification of degree of protection provided by enclosures.
	IS 14700 (Part 3/Sec. 2)	Electro magnetic compatibility (EMC) – Limits for Harmonic current emission – THD < 15% (equipment, input current < 16 Amps. per phase.
	IS 9000 (Part 6)	Environment testing: Test Z – AD: composite temperature/humidity cyclic test.
	IS 15885 (Part 2/Sec. 13)	Lamp control gear: particular requirements for DC or AC supplied electronic control gear IS 16004 – 1 and 2) for LED modules.
	IS 4905	Method for random sampling
2.07.00	**Electrical Installation Practices & Miscellaneous**	
	IS:1944	Code of practice for lighting of public thorough fare
	IS:3646	Code of practice for interior illumination.
	IS:5572	Classification of Hazardous areas (other than Mines) having flammable gases and Vapours for electrical installation
	S:6665	Code of practice for industrial lighting.
	.	National Electrical Code
	-	Indian Electricity Rules.
	IS:5	Indian Electricity Act Colour for ready mixed paints & enamels.
	IS:280	Mild steel wires for general engineering purposes.
	IS:374	Electric ceiling type fans & regulators.
	IS:732	Code of practice for electrical wiring installations.

CLAUSE NO.	TECHNICAL REQUIREMENTS
	IS:1255 — Code of practice for installation and maintenance of power cables Upto and including 33KV rating.
	IS:2062 — Steel for general structural purposes
	IS:2629 — Recommended practice for hot-dip galvanizing of iron and steel.
	IS:2633 — Methods for testing uniformity of coating of zinc coated articles.
	IS:2713 — Tubular steel poles for overhead power lines.
	IS:3043 — Code of practice for earthing
	IS:5216 — Guide for safety procedures and practices in electrical work.
	IS:5571 — Guide for selection of electrical equipments for hazardous areas.
	BS:6121 — Mechanical cable glands
3.00.00	**LIGHTING SYSTEM DESCRIPTION**
3.01.00	The illumination of various indoor and outdoor areas in the main plant & offsite area shall be provided as described here. The lighting system of various areas shall comprise of the following systems as identified in Annexure-B: (a) Normal AC Lighting System (b) Emergency AC Lighting System (c) DC Lighting System
3.02.01	**Normal AC Lighting System** Normal AC lighting system 415V, 3Phase, 4wire, will be fed from lighting panels (LPs) which in turn will be fed from the lighting distribution boards (LDBs)/Switch board MCC.
3.02.02	**Emergency AC Lighting System** This system shall be provided for certain important areas in the main plant. The lighting fixtures connected to this system shall be normally "ON" along with the normal AC system. These will be fed from emergency lighting panels (ELPs) which in turn will be fed 3-phase, 4-wire supply from the emergency lighting distribution boards (ELDB'S). These lights will go off for a few seconds in case of AC supply failure at Emergency Switchgear, but shall be automatically restored when Emergency Switchgear is energised by Diesel generator set.
3.03.00	**DC Lighting System**
3.03.01	At strategic locations in the main plant, a few lighting fixtures fed from 220V, DC supply, shall be provided to enable safe movement of operating personnel and access to important control points during an emergency, when both the normal AC and Emergency Lighting system fail. These lighting fixtures will be fed from 220V DC LDBs which in turn will be fed from DC lighting panels.
3.03.02	The supply to the DC lighting panels shall be automatically switched ON in case of loss of AC supply at station service switchgear as well as Emergency switch-gear. The DC

CLAUSE NO.	TECHNICAL REQUIREMENTS
	supply will be automatically switched OFF after about 3 minutes following the restoration of supply to normal AC or emergency AC lighting system.
3.03.03	Emergency DC lighting is to be provided, through self-contained DC emergency fixtures with four hours back-up duration, at strategic locations, in auxiliary/offsite buildings wherever DC supply system is not available. The fixtures shall be switched 'ON' automatically in case of failure of AC supply.
3.03.04	For Coal Handling plant./FGD Plant Area 18W, 220V DC LED Lighting fixture shall be provided in underground portion of conveyor, each switchgear room, control room, office room, pump house, each drive floor of TPs, staircases of various TPs and buildings and each local control area. DC lighting fixtures shall be fed from 220V DC LDB which in turn will be fed from CHP DC system. The supply to the DC lighting panels shall be automatically switched ON in case of loss of normal AC supply.
4.00.00	**DESIGN PHILOSOPHY** 1. A comprehensive illumination system shall be provided in the entire areas. 2. All outdoor lighting system shall be automatically controlled by synchronous timer. Provision to bypass the timer shall be provided in the panel. 3. The system shall include distribution boards, normal/ emergency lighting panels, lighting fixtures, junction boxes, receptacles, switch boards, lighting pole/masts, conduits, cables and wires, etc. The system shall cover all interior and exterior lighting such as area lighting etc. The constructional features of lighting distribution boards shall be similar to AC/DC distribution boards described in chapter of LT Switchgear. Outgoing circuits in LPs shall be provided with MCBs of adequate ratings. 4. The illumination system shall be designed on the basis of best engineering practice and shall ensure uniform, reliable, aesthetically pleasing and glare free illumination. The lighting fixtures shall be designed for minimum glare. The design shall prevent glare/luminous patch seen on VDU/ Large video screens, when viewed from an angle. The finish of the fixtures shall be such that no bright spots are produced either by direct light source or by reflection. The diffusers/ louvers used in fixtures shall be made of impact resistant polystyrene sheet and shall have no yellowing property over a prolonged period. The Lux levels to be adopted for various area are indicated at Annexure - A. (placed at the end of this Chapter). 5. Different Lighting Systems envisaged for various plant areas are indicated in Annexure-B: While finalizing the detailed layout of lighting fixtures, the position/location and layout of equipments should be taken into account to have adequate illumination at desired locations. 6. **LED Luminaires:** LED Luminaires shall be used for the lighting of all the indoor & outdoor areas in bidder's scope. However for DC lighting, hazardous areas lighting etc. conventional type luminaires shall be used. In false ceiling area LED luminaires shall be recessed mounting type & in non-false ceiling area the LED luminaires shall be surface mounting type.

CLAUSE NO.	TECHNICAL REQUIREMENTS
	The individual lamp wattage for LED shall be upto 3 watt. Fractional wattage LEDs are also acceptable. The LED chip efficacy shall be min 120 Lm/W. The luminaire efficacy shall be not less than 80 Lm/W. Suitable heat sink shall be designed & provided in the luminaire. The LED used in the luminaires shall have colour rendering index (CRI) of Min 80. Colour designation of LED shall be "cool day light" (min 5700K) type for indoor areas. However for outdoor areas, the colour temperature of LED shall be min. 4000K, including rough & dust prone areas. LED shall conform to the LM 80 requirements. The LED luminaires shall have minimum life of 25,000 burning hours with 80% of lumen maintenance at the end of the life. The max. junction temperature of LED shall be 85 deg C. Further the lumen maintenance at this temperature shall be min 90%. The THD of LED Luminaires shall be less than 10%. Further the EMC shall be as per IS 14700. The power factor of the luminaire shall not be less than 0.9. The marking on luminaire & safety requirements of luminaire shall be as per IS standards. Suitable heat sink with proper thermal management shall be designed & provided in the luminaire. The connecting wires used inside the system, shall be low smoke halogen free, fire retardant type and fuse protection shall be provided in input side specifically for LED luminaires. Care shall be taken in the design that there is no water stagnation anywhere in the housing of luminaire. The entire housing shall be dust and water proof protection as per IS 12063. 7. **Driver Circuit** LED modules and drivers shall be compatible to each other. The LED module driver's ratings and makes shall be as recommended by corresponding LED chip manufacturer. LED Drivers shall have following control & protections:- • Suitable precision current control of LED. • Open Circuit Protection • Short Circuit Protection • Over Temperature Protection • Overload Protection 8. Apart from maintenance factor as given below, Temperature correction factor shall be considered in the lighting design for fixtures located in non air conditioned area. (a.) Office area (air conditioned) : 0.8 (b.) Office area (non air conditioned) and other indoor area : 0.7 (c.) Dust prone indoor and outdoor area : 0.6 (d.) Coal Handling area, Ash Handling Conveyor /Transfer Points etc. : 0.5 9. (i) All outdoor fixtures shall be weather proof and of min. IP65 degree of protection. (ii) For Indoor type of fixtures:- (a) Surface/Pendent mounting: - IP 54 class of protection. (b) Recess Mounting (False ceiling):- IP 20 class of protection

CLAUSE NO.	TECHNICAL REQUIREMENTS
	10. (a) Lighting panels shall be constructed out of 2 mm thick CRCA sheet steel. The door shall be hinged and the panel shall be gasketted to achieve specified degree of protection. Lighting panels shall be powder coated with color shade RAL9002. Lighting panels shall have min. IP55 degree of protection. (b) All MCBs/Isolators/Switches/Contactors etc. shall be mounted inside the panel and a fibre glass sheet shall be provided inside the main door such that the operating knobs of MCBs etc., shall project out of it for safe operation against accidental contact. (c) Terminal bocks shall be 1100 V grade, clip-on stud type, made up of polymide 6.6 or better suitable for terminating multicore 35 or 70 Sq. mm. stranded aluminium conductor incoming cable and 10 Sq. mm. stranded aluminium conductor for each outgoing circuits voltage. All terminals shall be shrouded, numbered and provided with identification strip for the feeders. (d) MCB's shall be current limiting type with magnetic and thermal release suitable for manual closing and automatic tripping under fault condition. MCB's shall have short circuit interrupting capacity of 9 KA rms. MCB knob shall be marked with ON/OFF indication. A trip free release shall be provided to ensure tripping on fault even if the knob is held in ON position. MCB terminal shall be shrouded to avoid accidental contact. (e) Contactors of AC lighting panels shall be 3 no's, 32 A, 3 pole continuous duty MCB, load make-break type suitable for 415 V, 3 phase 4 wire system. HRC fuses with suitable mounting base of 125A shall be provided in the incomer of Contactors in the LP. (f) DC switches shall be rotary type, 2 pole, continuous duty, load break type, quick make quick break, suitable for 220 V DC, 2 wire system. Switch knob shall be provided with ON/OFF indication. (g) Programmable Digital Timer shall be Electronic Astronomical Almanac Time switch with battery back up of min. TEN years, 4 Digit LED display, 24 hours range, manual override facility, 10 Amp 3 relay output, with NO/NC Contacts suitable for operation on 240V single phase AC supply. (h) Each lighting panel (LP-3) shall be fed from a 415V/42V, 3 phase-4 wire, 3 KVA transformer. The transformer shall be located inside the lighting panel itself. Transformers shall be dry type, natural air cooled with class F insulation or better. Impedance of transformer shall be 5%. Transformers shall be tested as per IS:11171. Off-circuit tap changer with +/- 5% in steps of +/- 1.25% tapping shall be provided. One minute power frequency withstands voltage for lighting transformer shall be 2.5 KV.

CLAUSE NO.	TECHNICAL REQUIREMENTS

(i) Lighting Panels shall be of following types:

TYPE	INCOMER FEEDER	OUTGOING FEEDERS	DETAILOFCONTENTS
LP-1	3No. 415V, 32 A, TP MCB (31/2Cx70sq.mm cable)	18Nos.,20A, 240V MCB	415V, 63A(min.), AC2 duty contactor and Programmable Digital Timer of 24 hour range 10A, 240V selector switch, fuse, etc. outdoor type and IP:55 degree of protection
LP-2	3No. 415V, 32 A, TP MCB (31/2Cx35sq.mm cable)	9 Nos.,20A, 240V MCB	415V, 63A(min.), AC2 duty contactor and Programmable Digital Timer of 24 hour range 10A, 240V selector switch, fuse, etc. outdoor type and IP:55 degree of protection
LP-3	1 No., 4A fuse 3 KVA transformer,40A TPN MCB	24 Nos., 16A, 45V MCB	IP 55 degree of protection. Incomer shall be suitable for receiving 4Cx16 sq. mm cable and outgoing circuit shall be suitable for 2Cx16 sq. mm cable.
LP-D1	1No. 220V,32 A, DP Isolator (2Cx35sq.mm cable)	6Nos.,16A, 220V DP Switch & Fuse	220V,32A DC Fuse, etc. outdoor type IP:55 degree of protection.

.

11. Wires of different phase shall normally run in separate conduit.

12. Power supply shall be fed from 415 / 240 V normal AC supply, emergency AC supply and 220V DC supply through suitable number of conveniently located lighting distribution boards (LDB) and lighting panels (LP). AC lighting supply shall be isolated from main supply by 2x100% isolation transformers of max. rating of 100KVA for 10/15 nos. outgoing feeder with changeover switch facility. The isolation transformer shall be fed from two different bus sections of MCC and fault level restricted to 3 KA at Lighting Panels.

CLAUSE NO.	TECHNICAL REQUIREMENTS

13. Atleast one 6/16A, 240V AC universal socket outlet with switch shall be provided in offices, cabins, etc. Further 20A, 240V AC industrial receptacle with switch shall be provided strategically in all industrial areas.
Suitable number of 63A, 3ph, 415V AC industrial receptacles shall be provided for entire plant for welding purposes, particularly near all major equipment and at an average distance of 50m. Atleast one 63A, 3ph, 415V AC receptacle shall be provided in each floor of off-site buildings/ structures.

Receptacles boxes shall be fabricated out of 2 mm thick MS steel hot dip galvanized or of not less than 2.5 mm thick die-cast aluminium alloy or fabricated out of 2 mm thick CRCA sheet with electro static powder coating. IP-degree of protection shall be applicable to receptacles Type 'RA &''RC' only

Receptacles shall be of following types :

Type	Switch rating	Socket & plug rating	Type & make of plug & Socket	Terminal Block size
RA	20 A, SP240V AC(Industrial)	20A, 3 pin240 V AC	NTPC appd. make	1-4 way, suitable for loop-in loop- out of 10 sq.mm. Al. Conductor
RB	16A, S.P240V AC	6A+16A6 Pin decorative Piano-key Type Switch	NTPC appd.make	1-4 way, suitable for loop-in loop- out of upto 10 sq.mm. Al. Conductor
RC	20 A, SP24 V AC(Industrial)	20A, 3 pin24 V AC	NTPC appd. make	1-4 way, suitable for loop-in loop- out of 2 core -16 sq.mm. Al. Cable.

14. In the hazardous areas like Hydrogen generation plant, fuel oil handling areas or any other gas/ liquid fuel storage/ handling areas in bidder's scope, lighting shall be flame proof.

15. The type of fixtures, LP, JB, and receptacle used in Hydrogen generation plant building shall be suitable for group II C as per IS: 2148 or class I, Division II as per NEC 70-428.

16. All flouresent lamps shall be have "Cool day light" colour designation. The mirror optics type flouresent fixtures shall have no irridescence effect. Fixtures with better efficiency and upgraded proven system may also be considered
In candescent lamps may be used only with DC Lighting.

17. Aviation warning lights shall be provided as per the recommendations of ICAO and Director general of civil aviation, India. The arrangement of light should be marked such that the object is indicated from every angle in azimuth. The aviation warning lighting system shall also conform to the latest Indian standard IS 4998.

CLAUSE NO.	TECHNICAL REQUIREMENTS
	18. Contractor shall demonstrate the average lux level achieved for different areas as per specification requirements, after completion of the lighting work, at site to the satisfaction of engineer-in-charge.
4.01.00	**Ballasts**
4.01.01	All fluorescent fixtures except for Class-I, Div-II fittings/ increased safety fittings (Div-II/Hazardous Area) shall be provided with electronic ballasts.
4.02.00	All luminaires and their accessories and components shall be of type readily replaceable by available Indian makes.
4.03.00	**Fans & Regulator**
4.03.01	Ceiling Fans, to be provided in non air-conditioned office/control room area. Further tentatively one (1) no. ceiling fan shall be provided for 10 sq.m area, at suitable mounting height. The ceiling fans shall be suitable for operation on 240 V +/-10%, 50 Hz, AC supply comprising of class 'E' or better insulated copper wound single phase motor, 1200mm sweep, aerodynamically designed well balanced AL blades (3 Nos.), down rod, BEE 5 star rated, die cast aluminium housing, capacitor, suspension hook, canopies etc. finished in stove enameled white or with electro static powder coating. Power factor of fans shall not be less than 0.9. Fan regulators shall be stepped electronic type suitable for operation on 240V +/-10% AC supply.
4.04.00	**Junction Boxes, Conduits, Fitting & Accessories, Pull Out Boxes:**
	Junction box for indoor lighting shall be made of fire retardant material. Material of JB shall be Thermoplastic or thermosetting or FRP type.
	Junction boxes for street lighting poles and lighting mast if applicable , shall be deep drawn or fabricated type made of min. 1.6 mm thick CRCA Sheet. The box shall be hot dip galvanized. The degree of protection shall be IP55.
	All switches and receptacles upto 16A shall be modular type. These shall be provided with pre-galvanized/galvanized modular switchbox & plate.
	Conduits, Pipes and Accessories Galvanised heavy duty steel conduits for normal area and galvanised heavy duty steel conduits with an additional epoxy coating for corrosive area shall be offered. Alternatively glass reinforced epoxy conduits with comparable compressive and impact strength with that of heavy duty steel conduits may be offered.
	Rigid steel conduits shall be heavy duty type,hot dip galvanised conforming to IS : 9537 Part-I & II shall be suitable for heavy mechanical stresses, threaded on both sides and threaded length shall be protected by zinc rich paint. Conduits shall be smooth from inside and outside.
	Flexible conduit shall be water proof and rust proof made of heat resistant TERNE coated steel.
	Pull out boxes shall be provided at suitable interval in a conduit run .Boxes shall be suitable for mounting on Walls, Columns, Structures, etc.. Pull-out boxes shall have cover with screw and shall be provided with good quality gasket lining. Pull out boxes used outdoor shall be weather proof type suitable for IP: 55 degree of protection and those used indoor shall be suitable for IP: 52 degree of protection. Pull out box & its cover shall be hot dip galvanized.

CLAUSE NO.	TECHNICAL REQUIREMENTS
4.05.00	**Lighting Wires**
4.05.01	Lighting wires shall be 1100 V grade, light duty PVC insulated unsheathed, stranded copper/aluminium wire for fixed wiring installation. Colour of the PVC insulation of wires shall be Red, Yellow, Blue and Black for R, Y, B phases & neutral, respectively and white & grey for DC positive & DC negative circuits, respectively. Minimum size of wire shall not be less than 1.5.sq.mm. for copper and 4 sq.mm. for aluminium.
4.06.00	**Lighting Poles**
4.06.01	The Street Light system and peripheral lighting shall be designed generally in line with design guidelines. The Poles shall be mounted above ground using base plate and minimum height of pole shall be 8 mtrs The poles shall be hot-dip galvanized as per IS2629/ IS2633/ IS4759. The average coating thickness of galvanizing shall be min. 70 micron. The System shall be capable of withstanding the appropriate wind load etc as per IS 875 considering prevailing soil/ site condition considering all accessories mounting on pole. The street light poles shall have loop in loop out arrangement for cable entry and light fixture / wiring protected with suitably rated MCB.
4.07.00	**Occupancy based Passive Infra-red sensors** The sensors shall be recess mounted, programmable type suitable for lighting load of 6A with variable off delay settings. The detection area shall be minimum 5 metres for standard room height of 3mt. All the calibrated settings shall be stored in non-volatile memory of PIR sensor which shall be unaffected by power supply fluctuations. Necessary 16A contactor shall be supplied alongwith each sensor & shall be located inside the switch box
5.00.00	**TESTS**
5.01.00	**For LED Fixture** a) All equipments to be supplied shall be of type tested design. During detailed engineering, the contractor shall submit for Employer's approval the reports of all the type tests as listed in this specification and carried out within last ten years from the date of bid opening. These reports should be for the test conducted on the equipment similar to those proposed to be supplied under this contract and the test(s) should have been either conducted at an independent laboratory or should have been witnessed by a client. b) However if the contractor is not able to submit report of the type test(s) conducted within last ten years from the date of bid opening, or in the case of type test report(s) are not found to be meeting the specification requirements, the contractor shall conduct all such tests under this contract at no additional cost to the Employer either at third party lab or in presence of client /Employers representative and submit the reports for approval. c) All acceptance and routine tests as per the specification and relevant standards shall be carried out. Charges for these shall be deemed to be included in the equipment price. d) The type test reports once approved for any projects shall be treated as reference. For subsequent projects of NTPC, an endorsement sheet will be furnished by the manufacturer confirming similarity and "No design Change". Minor changes if any shall be highlighted on the endorsement sheet.

CLAUSE NO.	TECHNICAL REQUIREMENTS
	LED fixtures Type test reports to be submitted for one rating each of following type of LED fixtures. a) High bay fixture. b) Well glass fixture. c) Street light fixture d) Surface mounted type fixture. e) Recessed mounted type fixture.
5.02.00	**For all other lighting equipment:** a) All equipment to be supplied shall be of type tested design. During detail engineering, the contractor shall submit for Owner's approval the reports of all the type tests as listed in this specification and carried out within last ten years from the date of bid opening. These reports should be for the test conducted on the equipment similar to those proposed to be supplied under this contract and the test(s) should have been either conducted at an independent laboratory or should have been witnessed by a client. b) However if the contractor is not able to submit report of the type test(s) conducted within last ten years from the date of bid opening, or in the case of type test report(s) are not found to be meeting the specification requirements, the contractor shall conduct all such tests under this contract at no additional cost to the owner either at third party lab or in presence of client/owners representative and submit the reports for approval.
5.03.00	All acceptance and routine tests as per the specification and relevant standards shall be carried out. Charges for these shall be deemed to be included in the equipment price.
5.04.00	Selection of samples for type test, acceptance test & routine test and acceptance criteria for all the items shall be as per relevant IS
5.05.00	Type test reports of the following items as per technical specification requirements/ standards shall be submitted for approval. **SL NO. DESCRIPTION** i. Lighting fixtures of each type ii. Lighting panel of each type (Degree of Protection) iii. Junction Box of each type. Type test reports for LED as per standards for following shall be submitted for approval. 1. Visual and Dimension check 2. Proof of procurement of LEDs 3. Safety tests a) Marking b) Construction c) Provision for Earthing d) External and Internal wiring e) Protection against electrical shock f) Endurance and Thermal g) Insulation resistance & electrical strength h) Resistance to heat fire & tracking i) Resistance to Humidity 4. Fire Retardant test 5. Performance tests (electrical, Photometric color and Life)

CLAUSE NO.	TECHNICAL REQUIREMENTS

6. Burn-in Test
7. Power Cycling
8. Temperature rise test
9. Emission Tests
a) Radiated & conducted emission
b) Harmonics & flickers
10. Immunity tests

In addition, following test reports to be submitted for LED chip/LED luminaire:
a) LED parameters like Lumen per watt, CRI, Beam angle from manufacturer.
b) LM 80/IS: 16105 report.
c) LM 79/IS: 16106 report.

5.06.00 Acceptance Test and Routine Test

5.06.01 All lighting fixtures, lamps and other items shall be subjected to acceptance and routine test, as per relevant specified standards.

5.06.02 Junction boxes, switch boxes, receptacle enclosure etc. shall be subjected to physical and dimensional checks also. Switch boxes shall be made of 1.6 mm thick MS sheet with 3 mm thick decorative, Perspex cover. Switch box shall be hot dip galvanized.

Switch boxes shall be of following types :

TYPE No.	Switch	Fan Regulator*	Socket
SWB 1	5 A - 2 Nos.	-	-
SWB 2	5 A - 3 Nos.	-	5A - 1.No.
SWB 3*	5 A - 5 Nos.	1	5A - 1.No
SWB 4*	5 A - 7 Nos	3	5A - 1.No.
SWB 5**	5 A - 5 Nos	-	5A - 1.No.

* Space provision shall be kept for fan regulator in switch boxes.

** Shall have the provision for mounting the 16 A contactor.

5.07.00 **Galvanizing Tests**

5.07.01 The quality of galvanizing shall be smooth, continuous, free from flux stains and shall be inspected visually.

5.07.02 In addition following tests shall be conducted as acceptance tests.

CLAUSE NO.	TECHNICAL REQUIREMENTS
	(a) Uniformity of coating - The coating of any article shall withstand for one (1) minute dips in standard copper sulphate solution without the formation of an adherent red spot of metallic copper upon the basic metal. (b) The quality of cadmium/zinc plating on items with screw threads shall be free from visible defects such as unplated areas, blisters and modules and shall be inspected visually. (c) In addition, the plating thickness shall be determined microscopically/ chemically or electronically.
6.00.00	**COMMISSIONING CHECKS** 1. On completion of installation work, the Contractor shall request the Project manager for inspection and test with minimum of fourteen (14) days advance notice. 2. The Project manager shall arrange for joint inspection of the installation for completeness and correctness of the work. Any defect pointed out during such inspection shall be promptly rectified by the Contractor. 3. The installation shall be then tested and commissioned in presence of the Project manager. 4. The contractor shall provide all, men material and equipment required to carry out the tests. 5. All rectifications, repair or adjustment work found necessary during inspection, testing and commissioning shall be carried out by the Contractor without any extra cost. The handing over the lighting installation shall be effected only after the receipt of written instruction from the Employer/his authorized representative. 6. The testing shall be done in accordance with the applicable Indian Standards and codes of practices. The following tests shall be specifically carried out for all lighting installation. (a) Insulation Resistance. (b) Testing of earth continuity path. (c) Polarity test of single phase switches. (d) Functional checks. 7. The lighting circuits shall be tested in the following manner: (a) All switches ON and consuming devices in circuit, both poles connected together to obtain resistance to earth. (b) Insulation resistance between poles with lamps and other consuming devices removed and switches ON.

CLAUSE NO.	TECHNICAL REQUIREMENTS

ANNEXURE-A

Sl No.	Location**	Average Illumination Level (Lux)	Type of Fixture
(a)	Switchgear rooms, Charger, Rectifier room	200	Industrial type LED Luminaire
(b)	Control room, computer room, control equipment room	350	LED luminaire equivalent to Mirror optics with anti-glare features or downlighter.
(c)	Offices, conference rooms, etc.	300	Decorative mirror optics Type LED luminaire or LED downlighter
(d)	Battery rooms	100	totally enclosed corrosion Proof LED Luminaire
(e)	Transformer Area	20 (general) 50 (on equipment)	LED Luminaire
(f)	Diesel generating room /enclosure, Compressor room, pump house etc.	150	LED medium bay/ Industrial type LED Luminaire
(g)	Cable galleries/vault	50	Industrial type LED Luminaire
(h)	Street lighting- primary roads secondary roads	 20 10	LED street lights
(i)	Outdoor storage handling and unloading area	20	LED Luminaire
(j)	Cement stores	150	Industrial dust proof type LED Luminaire
(k)	Chemical stores/House	150	Corrosion proof LED Luminaire
(l)	Permanent stores	150	LED high/medium bay / Industrial trough LED Luminaire
(m)	Workshop. Building	150	LED high/medium bay / Industrial trough LED Luminaire
(n)	Laboratory General Analysis area	 150 300	Corrosion proof LED Luminaire
(o)	Garage/Car Parking	50	Industrial type LED Luminaire

CLAUSE NO.	TECHNICAL REQUIREMENTS
	(p) Transfer points, Sheds, tunnels, bunker house, Conveyor Gallery etc. in bidders scope — 100 — LED Dust tight/Well glass type Luminaire
	(q) Facility building, canteen etc. — 150 — Industrial type LED Luminaire
	(r) Corridors, Walkways — 50 — LED Luminaire
	(s) Building Periphery Lighting — 10 — LED Street Light fixture
.	

CLAUSE NO.	TECHNICAL REQUIREMENTS

ANNEXURE-B

Sl.	Plant Areas	Normal AC Lighting System	Emergency AC Lighting System	220 V DC Lighting System	Portable DC Fixtures
1	TG Building(turbine hall, switchgear room etc)	80%	20%	√	—
2.	Boiler Platform	80%	20%	√	
3	DG Area/ Room	80%	20%		
4	Compressor Room				√
5	ESP Control Room	80%	20%		√
6	Unit Control Room	70%	30%		
7	Switchyard Control Room	80%	20%		
8	Battery Room	80%	20%		
9	Cable Spreader Room/ Vault	80%	20%	√	
10	Make Up Water Pump House	100%			√
11	Chemical House	100%			√
12	Fuel Oil Pump House	100%			√
13	Ash Handling Plant	100%			√
14	Water Treatment Plant	100%			√
15	CT Switchgear Room	100%			√
16	Cooling Towers	100%			
17	Workshop	100%			√
18	Service Building	100%			
19	Area Lighting	100%			
20	Street Lighting	100%			
21	Transformer Yard and Storage Yard	100%			
22	Coal Handling Plant	100%		√	
23	GIS Hall	80%	20%		
24	AIS Switchyard	80%	20%		

CLAUSE NO.	TECHNICAL REQUIREMENTS

DC Emergency Lighting:

Sl.	Area	Average Lux Level
1	Unit Control Room	100
2	Control Equipment Room	100
3	Switchyard Control Room	20
4	Strategic Control Points (In TG Building & Boiler Area, Switchgear room, SWAS, Battery Room, UPS Area, TG Hall, Luboil Room etc	20
5	Cable Vault & Galleries	1 fixture at every 20 metres spacing along walkways
6	Boiler Stair Case	1 fixture at every 20 metres spacing along walkways
7	Exit/ Entry of Main Plant Building	1 fixture
8	Fire Exit Sign	1 fixture

.

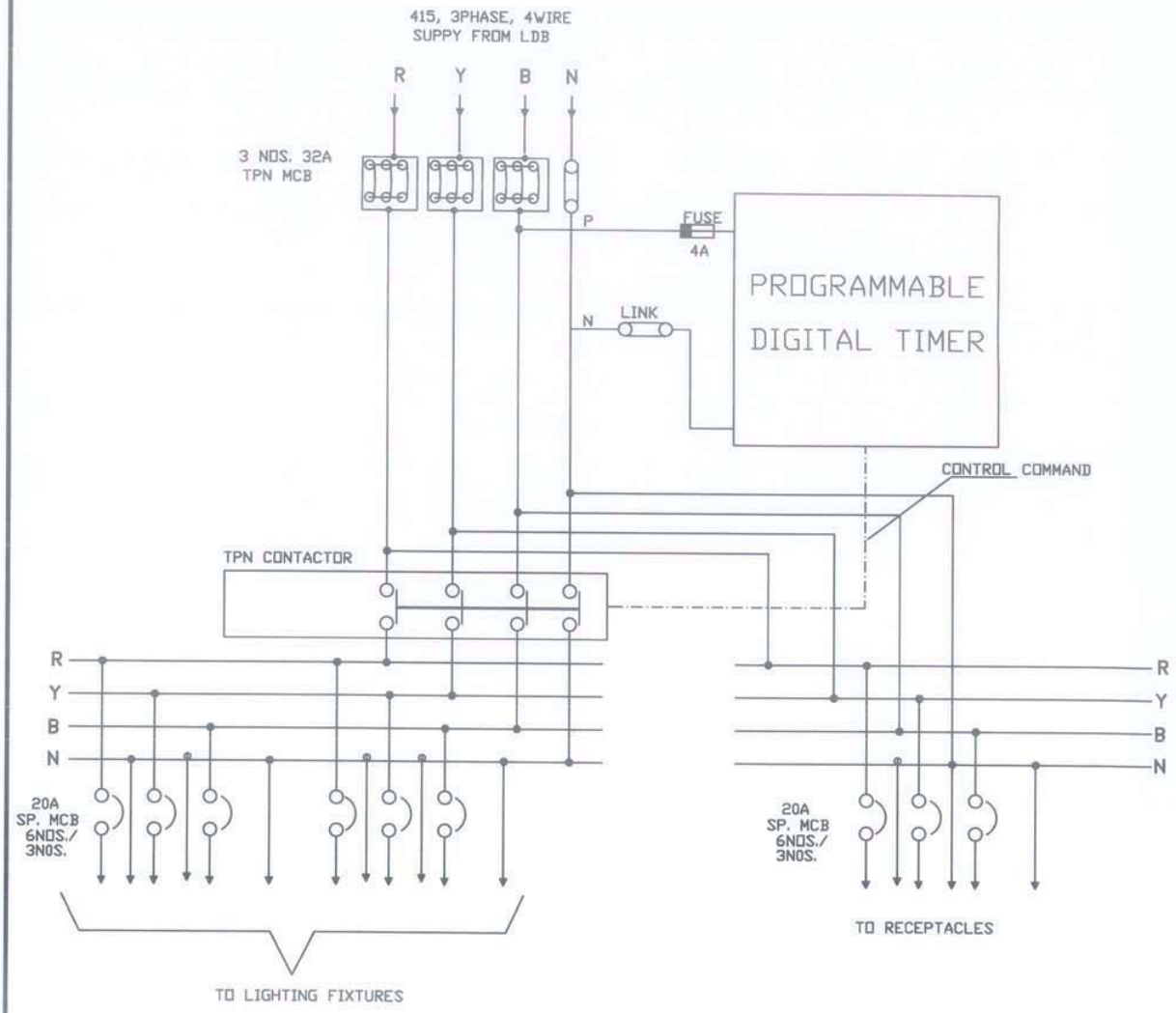

S.NO.	LP TYPE	INCOM ISOLATER	OUTGOING 20A MCB'
1	LP-1	3 NOS 32A TPN MCB + 63A CONT + SYNC. TIMER + INDICATING LAMPS	12 NOS. SP+ 6NO. SP
2	LP-2	3 NOS 32A TPN MCB + 63A CONT + SYNC. TIMER + INDICATING LAMPS	6 NOS. SP+ 3NOS. SP

This drawing and the design covers are the property of NTPC LTD. and must not be copied, loaned or exhibited either in part or in whole without written permission. Any contravention is liable for prosecution.

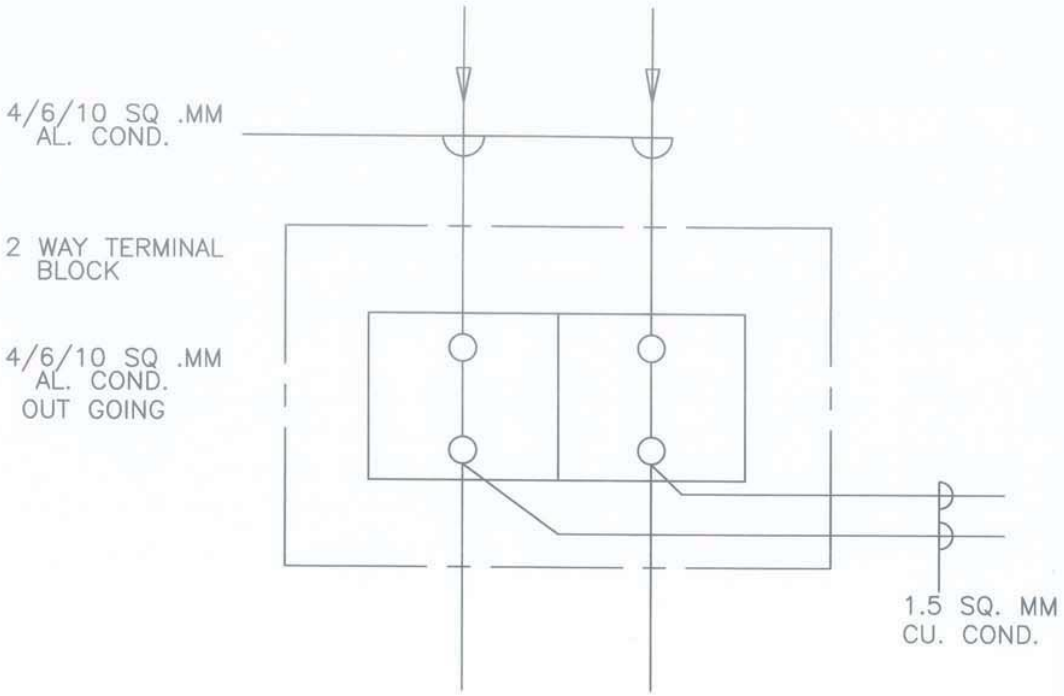

JUNCTION BOX TYPE – F

This drawing a he design it covers are the property of NTPC LTD. and must not opied, loaned
or exhibited either in part or in whole without written permission. Any contravention is liable for prosecution.

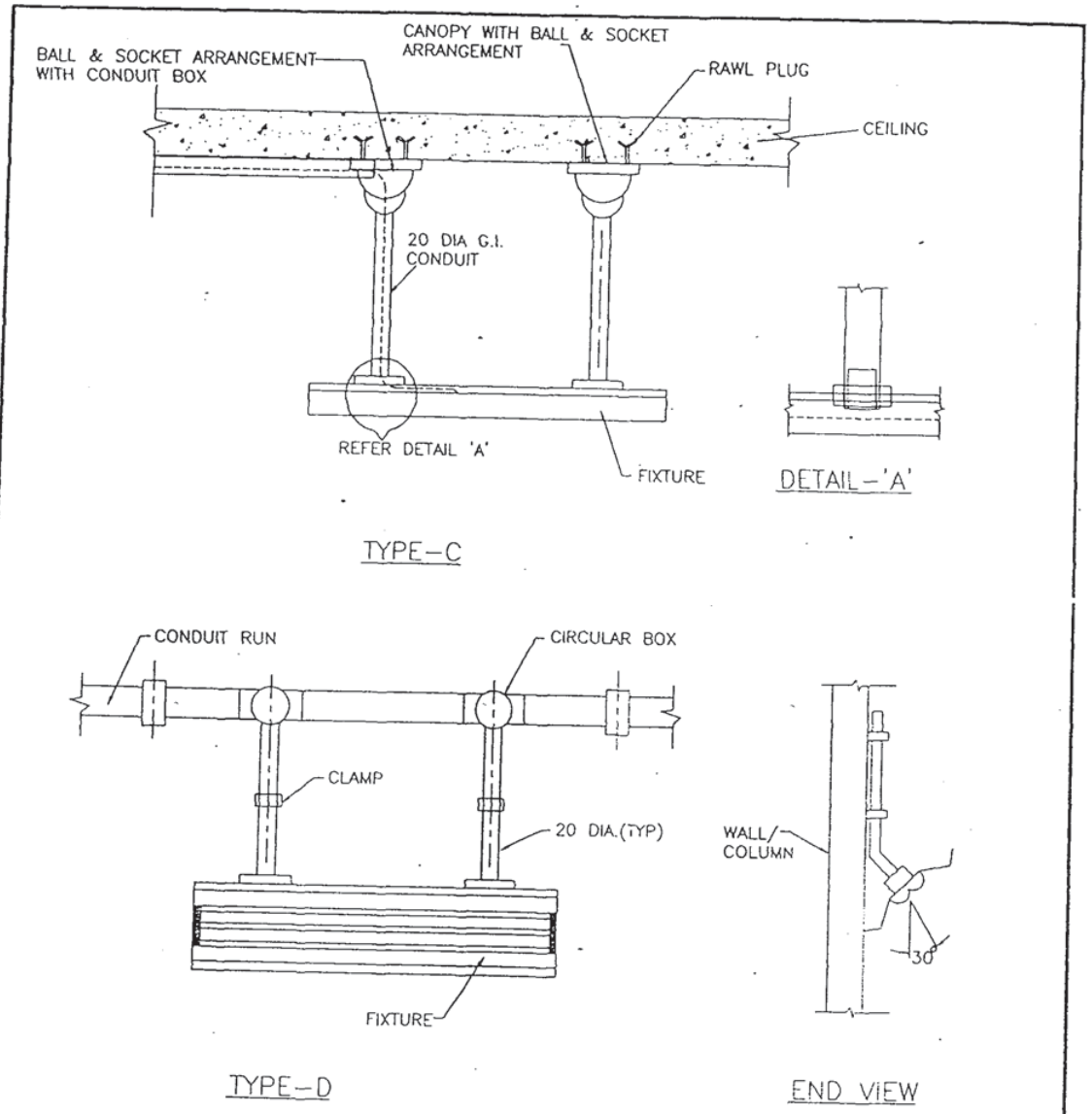

This drawing and the de..gn it covers are the property of NATIONAL THL..AL POWER CORPORATION LTD. and must not be copied, loaned or exhibited either in part or in whole without written permission. Any contravention is liable for prosecution.

L11.DWG

49

This drawing and the de. gn it covers are the property of NATIONAL THE. AL POWER CORPORATION LTD. and must not be copied, loaned or exhibited either in part or in whole without written permission. Any contravention is liable for prosecution.

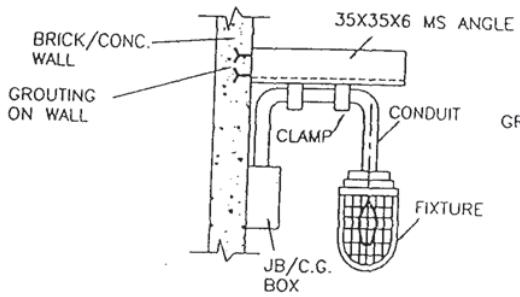

WALL MOUNTING (TYPE-E)

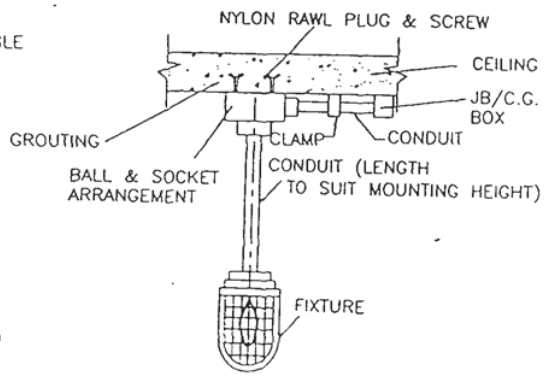

CEILING MOUNTING (TYPE-F)

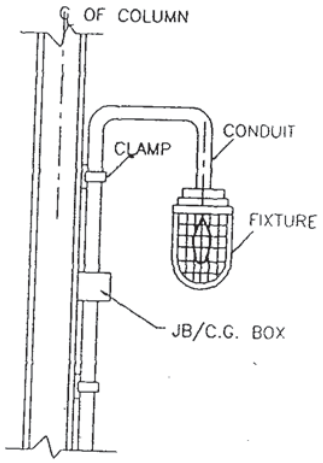

COLUMN MOUNTING (TYPE-G)

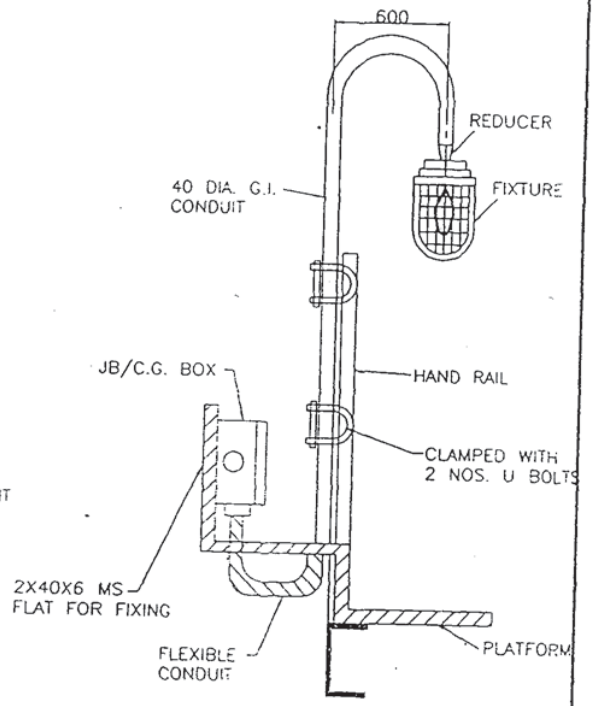

HAND RAIL MOUNTING (TYPE-I)

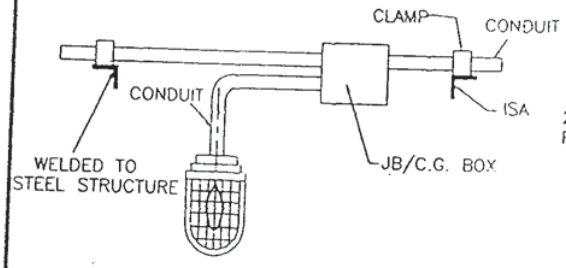

STRUCTURE MOUNTING (TYPE-H)

NOTES:

ALL DIMENSIONS ARE IN MM.

L12.DWG

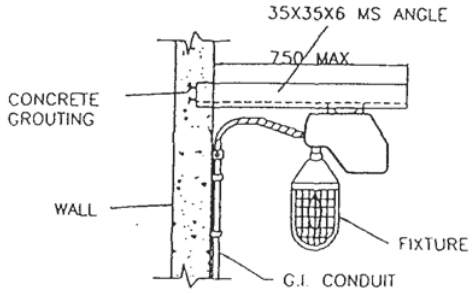

WALL MOUNTING (TYPE-J)

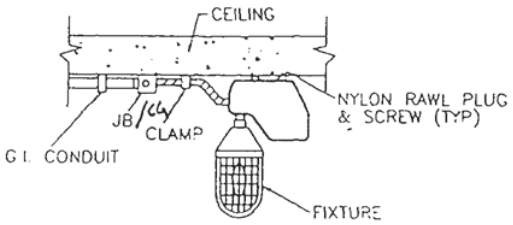

CEILING MOUNTING (TYPE-K)

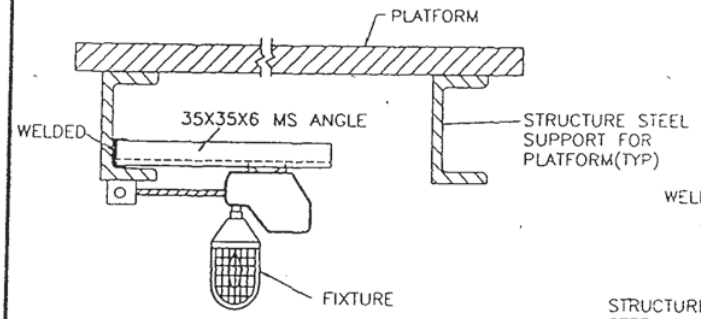

STRUCTURE MOUNTING (TYPE-L)

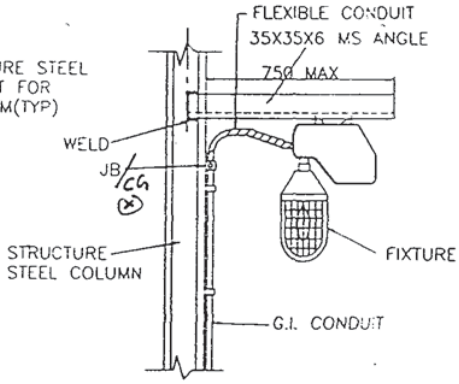

COLUMN MOUNTING (TYPE-M)

NOTES:

ALL DIMENSIONS ARE IN MM.

(*) In case of non-integral CG box

This drawing and the design it covers are the property of NATIONAL THERMAL POWER CORPORATION LTD. and must not be copied, loaned or exhibited either in part or in whole without written permission. Any contravention is liable for prosecution.

L13.DWG

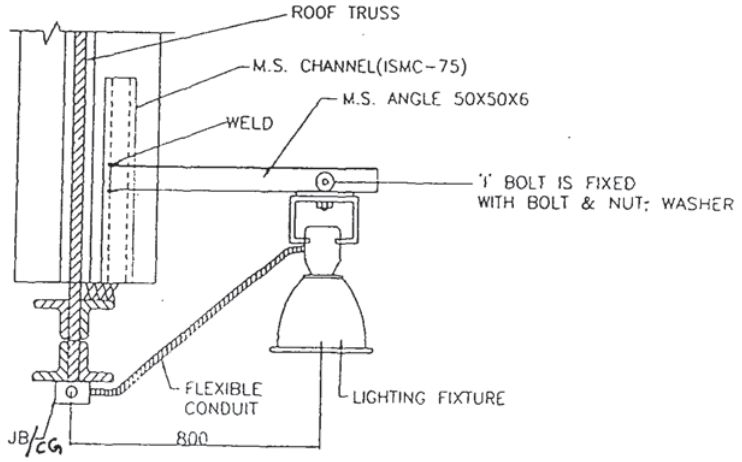

STRUCTURE MOUNTING (TYPE-N)

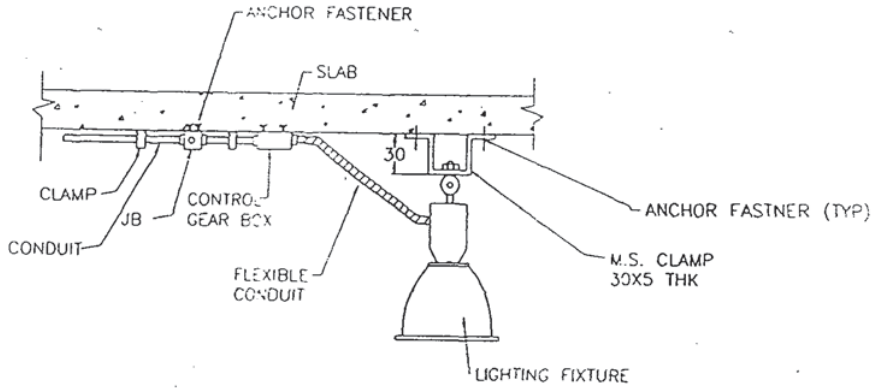

CEILING MOUNTING (TYPE-O)

NOTES:

ALL DIMENSIONS ARE IN MM.

This drawing and the de_gn it covers are the property of NATIONAL THE. AL POWER CORPORATION LTD. and must not be copied, loaned or exhibited either in part or in whole without written permission. Any contravention is liable for prosecution.

L14.DWG

This drawing and the design it covers are the property of NATIONAL THERMAL POWER CORPORATION LTD. and must not be copied, loaned or exhibited either in part or in whole without written permission. Any contravention is liable for prosecution.

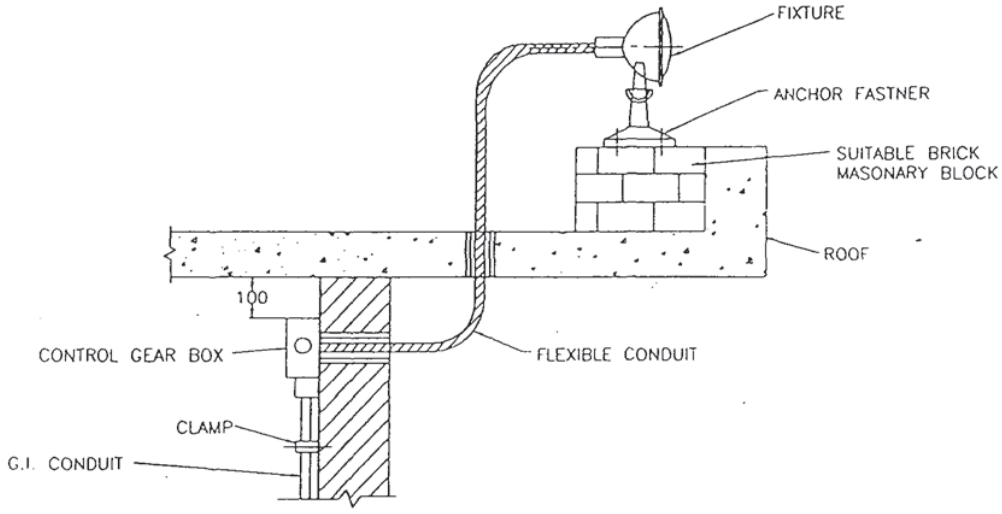

ROOF MOUNTING (TYPE-P)

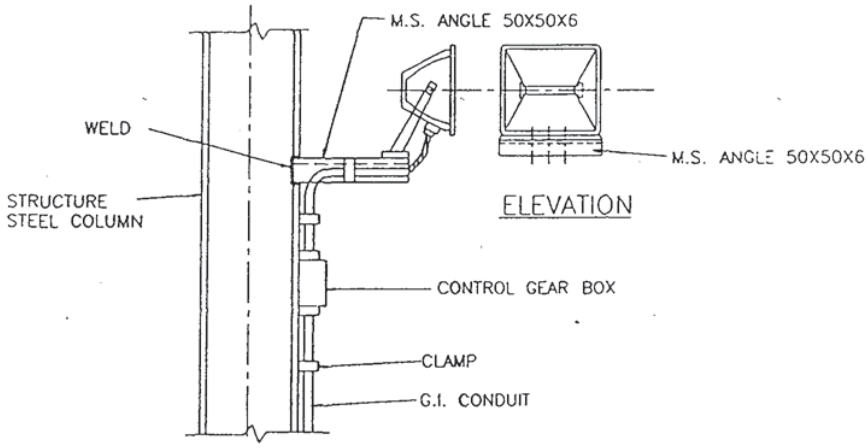

COLUMN MOUNTING (TYPE-Q)

NOTES:

ALL DIMENSIONS ARE IN MM.

L15.DWG

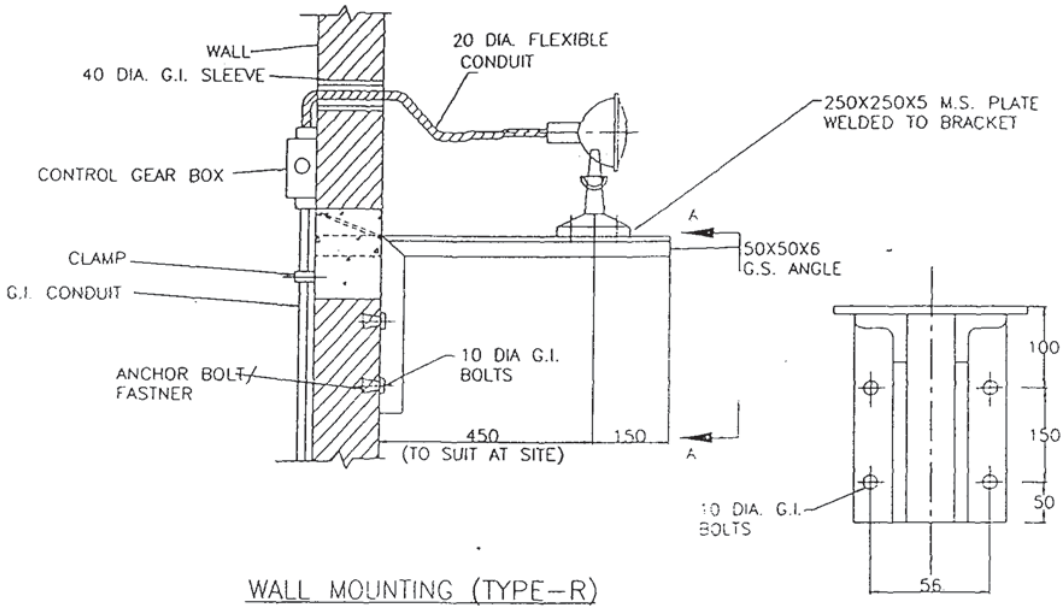

WALL MOUNTING (TYPE-R)

VIEW-'AA'

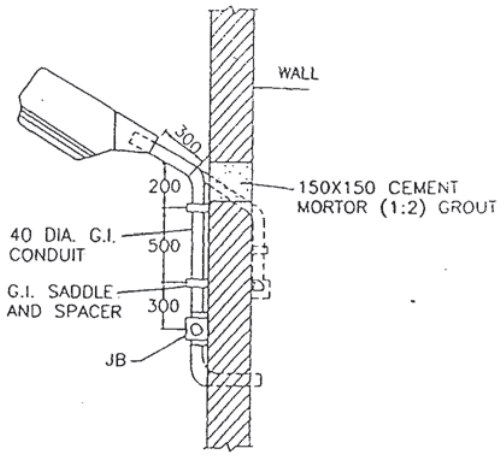

WALL MOUNTING (TYPE-S)

NOTES:

ALL DIMENSIONS ARE IN MM.

This drawing and the de..gn it covers are the property of NATIONAL THE..AL POWER CORPORATION LTD. and must not be copied, loaned or exhibited either in part or in whole without written permission. Any contravention is liable for prosecution.

L16.DWG

This drawing and the design it covers are the property of NATIONAL THERMAL POWER CORPORATION LTD. and must not be copied, loaned or exhibited either in part or in whole without written permission. Any contravention is liable for prosecution.

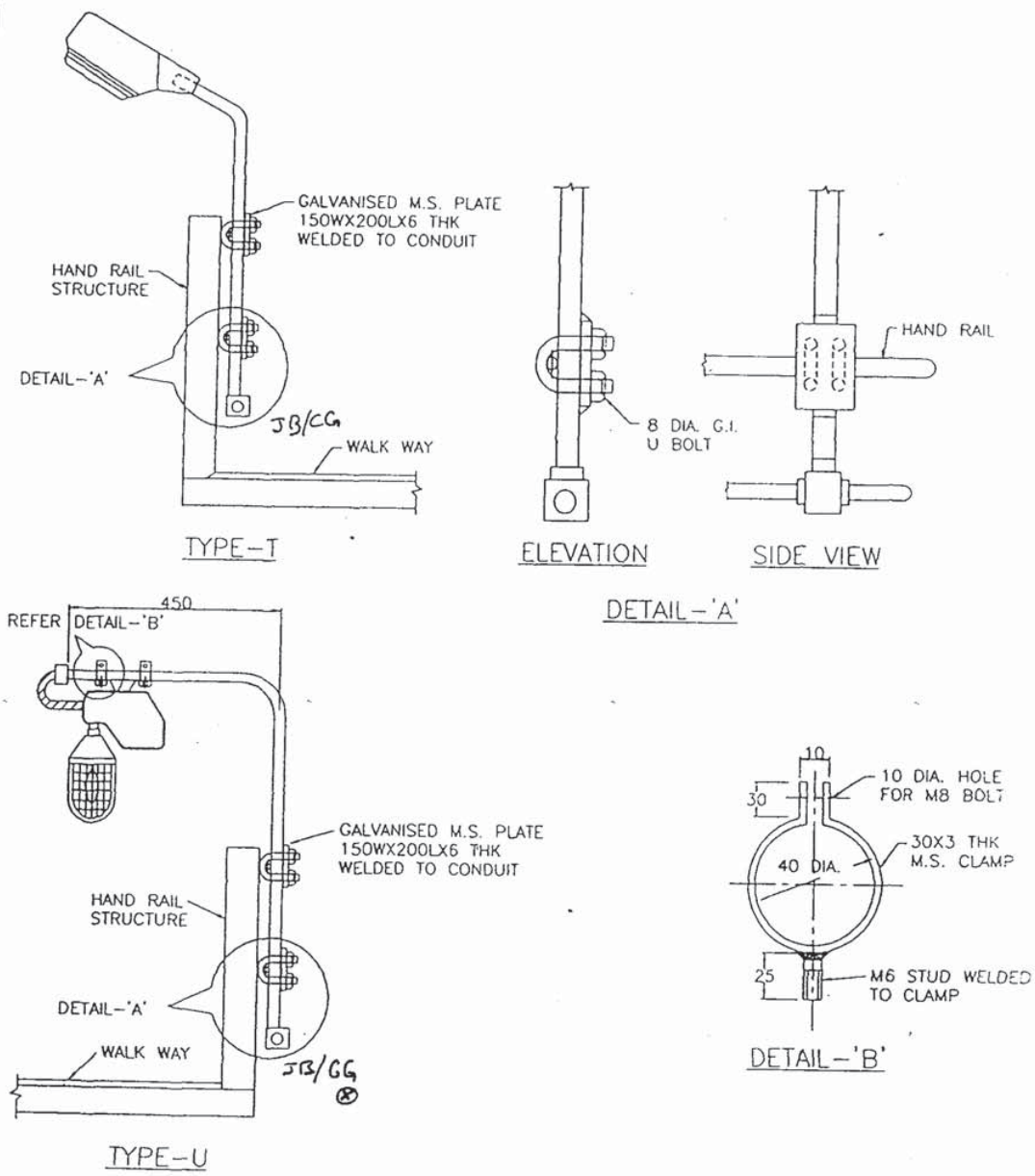

NOTES:

ALL DIMENSIONS ARE IN MM.

(*) In case of non-integral control gear

L17.DWG

This drawing and the design it covers are the property of NATIONAL THERMAL POWER CORPORATION LTD. and must not be copied, loaned or exhibited either in part or in whole without written permission. Any contravention is liable for prosecution.

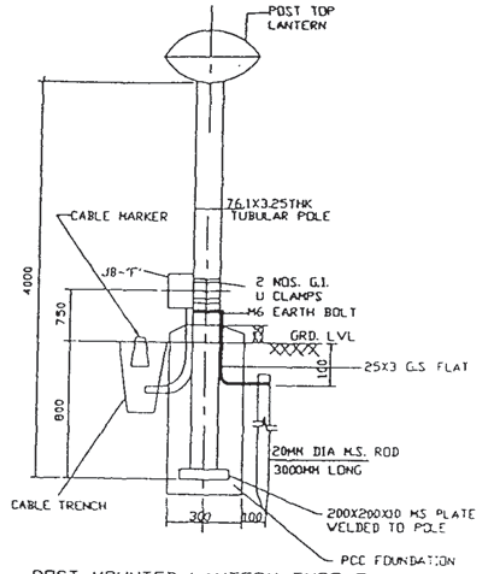

POST MOUNTED LANTERN TYPE-E1

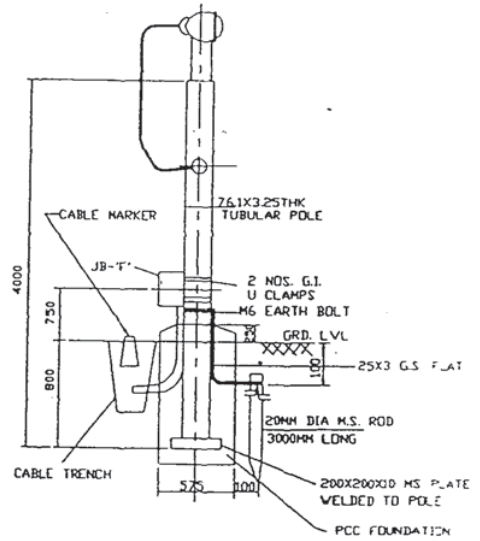

POST MOUNTED FLOOD LIGHT TYPE-E2

NOTES:
1. ALL DIMENSIONS ARE IN MM.
2. FOUNDATION DIMENSIONS SHOWN ARE TENTATIVE ONLY.

L5.DWG

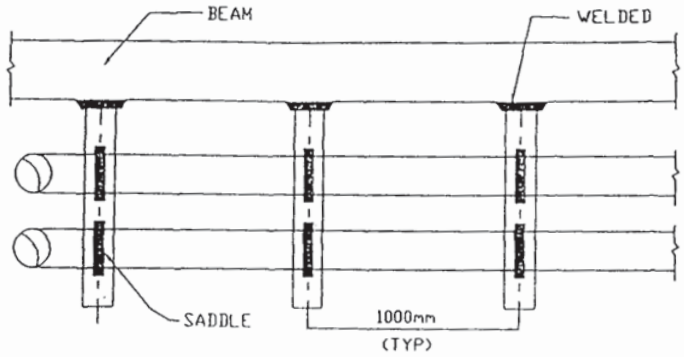

CONDUIT FIXING ARRANGEMENT OF STEEL STRUCTURE

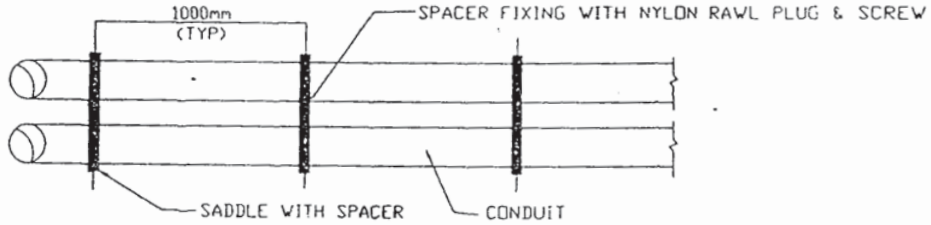

CONDUIT FIXING ARRANGEMENT OF CEILING/WALL

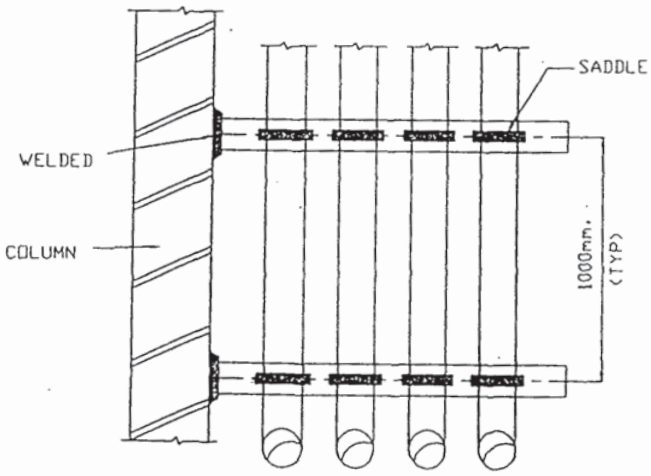

NOTES:

1. THE CONDUIT SUPPORT SHALL BE PROVIDED AT AN INTERVAL OF 1000mm.
2. SIZE OF STEEL FOR:
   a) SINGLE RUN OF CONDUIT- 25X5 MS FLAT.
   b) TWO & THREE RUNS OF CONDUIT- 25X25X3 MS ANGLE.
   c) FOUR RUNS OF CONDUIT ONWARD- 35X35X6 MS ANGLE.
3) ALL STEEL FABRICATION SHALL BE PAINTED WITH COATS OF METAL PRIMER FOLLOWED BY THE TWO COATS OF AL. PAINT.

This drawing and the design it covers are the property of NATIONAL THERMAL POWER CORPORATION LTD. and must not be copied, loaned or exhibited either in part or in whole without written permission. Any contravention is liable for prosecution.

L20.DWG

CLAUSE NO.	QUALITY ASSURANCE

MOTOR

TESTS/CHECKS / TEMS/COMPONENTS	Visual	Dimensional	Make/Type/Rating /General Physical Inspection	Mech/Chem. Properties	NDT /DP/MPI/UT	Metallography	Electrical Characteristics	Welding/Brazing(WPS/PQR)	Heat Treatment	Magnetic Characteristics	Hydraulic/Leak/Pressure Test	Thermal Characteristics	Run out	Dynamic Balancing	Routine & Acceptance tests as per IS-325/IS-4722 /IS- 9283/IS 2148/IEC60034\IEC 60079-I/ IS-12615	Vibration	Over speed	Tan delta, shaft voltage & polarization index test	Paint shade, thickness & adhesion
Plates for stator frame, end shield, spider etc.	Y	Y	Y	Y	Y				Y										
Shaft	Y	Y	Y	Y	Y	Y			Y										
Magnetic Material	Y	Y	Y	Y			Y			Y		Y							
Rotor Copper/Aluminium	Y	Y	Y	Y			Y		Y										
Stator copper	Y	Y	Y	Y			Y		Y			Y							
SC Ring	Y	Y	Y	Y	Y		Y	Y	Y										
Insulating Material	Y		Y	Y			Y					Y							
Tubes, for Cooler	Y	Y	Y	Y	Y				Y		Y								
Sleeve Bearing	Y	Y	Y	Y	Y				Y		Y								
Stator/Rotor, Exciter Coils	Y	Y	Y				Y	Y											
Castings, stator frame, terminal box and bearing housing etc.	Y	Y	Y	Y	Y			Y											
Fabrication & machining of stator, rotor, terminal box	Y	Y			Y			Y	Y										

CLAUSE NO.	QUALITY ASSURANCE

Wound stator	Y	Y					Y	Y											
Wound Exciter	Y	Y					Y	Y											
Rotor complete	Y	Y					Y						Y	Y					
Exciter, Stator, Rotor, Terminal Box assembly	Y	Y					Y												
Accessories, RTD, BTD,CT, Space heater, antifriction bearing, gaskets etc.	Y	Y	Y																
Complete Motor	Y	Y	Y												Y	Y	Y	Y1	Y

Note: 1. This is an indicative list of tests/checks. The manufacture is to furnish a detailed Quality Plan indicating the practices & Procedure followed along with relevant supporting documents during QP finalization. However, No QP for LT motor upto 50KW.

2. Additional routine tests for Flame proof motors shall be applicable as per relevant standard
3. Makes of major bought out items for HT motors will be subject to NTPC approval.
4. Y1 = for HT Motor / Machines only.

CLAUSE NO.	QUALITY ASSURANCE

LT Power Cables

Attributes / Characteristics Item / Components / Sub System Assembly	Make, Type & T.C as per relevant standard	Dimension/surface finish	Mechanical properties	Chemical Composition	Spark Test(as applicable)	Electrical properties	Hot Set Test/ Eccentricity & Ovality	Lay length & Sequence	Armour coverage, cross over, looseness, gap between two	Sequential marking/ Batch marking/ surface finish/ cable length	T.S & elongation before & after ageing on outer sheath & insulation	Thermal stability	Anti termite coating on wooden	Constructional requirements feature as per NTPC specification	Routine & Acceptance Tests as per relevant standard & NTPC specification	FRLS Tests
Aluminum (IS-8130)	Y	Y	Y	Y		Y										
XLPE Compound (IS-7098)	Y		Y			Y	Y				Y					
PVC insulation Compound (IS: 5831)	Y		Y			Y					Y	Y				
FRLS PVC Compound (IS-5831, ASTM-D2843, IS10810(Part 58), IEC-60754 Part-1)	Y		Y								Y	Y				Y
Extrusion & curing /Manufacturing of Core (PVC / XLPE)		Y			Y		Y					Y				
Core Laying								Y								
Armour wire/strip	Y	Y	Y													
Inner sheath	Y	Y														
Armouring		Y							Y							
Outer Sheathing		Y								Y						
Power Cable (Finished) (IS-5831, ASTM-D2843, IS10810(Part 58), IEC-60754 Part-1, IEC 60332 part III cat B)								Y	Y	Y	Y	Y		Y	Y	Y
Wooden drum(IS-10418) /Steel Drum		Y											Y	Y		

Notes:

1. This is an indicative list of tests / checks. The manufacturer is to furnish a detailed Quality Plan indicating the practice and procedure along with relevant supporting documents.
2. Make of all major Bought out items will be subject to NTPC approval.

CLAUSE NO.	QUALITY ASSURANCE

ROUTINE TESTS	**Following routine tests shall be carried out on each drum of finished cables for all types (PVC / XLPE insulated) & sizes.**	
1)	Conductor Resistance test	
2)	High voltage test	
ACCEPTANCE TESTS	**Following Acceptance tests shall be carried out on each size of each type (PVC / XLPE insulated) of cables, in the offered lot.**	
A) For Conductor (as per sampling plan mentioned in IS: 1554 / 7098)		
	1)	Annealing test (Copper)
	2)	Tensile Test (Aluminum)
	3)	Wrapping Test (Aluminum)
	4)	Resistance test
B) For Armour Wires / Formed Wires (If applicable) (as per sampling plan mentioned in IS: 1554 / 7098)		
	1.	Measurement of Dimensions
	2.	Tensile Tests
	3.	Elongation Test
	4.	Torsion Test For Round wires only
	5.	Wrapping Test
	6.	Resistance Test
	7.	Mass of Zinc coating test For G S wires / Formed wires only
	8.	Uniformity of Zinc coating For G S wires / Formed wires only
	9.	Adhesion test For G S wires / Formed wires only
	10.	Freedom from surface defects
C) For PVC / XLPE insulation & PVC Sheath (as per sampling plan mentioned in IS: 1554 / 7098)		
	1)	Test for thickness
	2)	Tensile strength & Elongation before ageing (for tests after ageing see “D”)
	3)	Hot set test (For XLPE insulation)

CLAUSE NO.	QUALITY ASSURANCE

D) Ageing test:

	Criteria	Condition	Test Requirements	Remarks
PVC insulation & outer sheath:	Samples as per relevant IS, from each size of cables in the offered lot, shall be tested for tensile strength & elongation (before ageing). **Tensile & elongation testing shall preferably be done with a computerized machine.** The values will be compared with corresponding values mentioned in the Type Test report accepted by NTPC. These values of Tensile Strength & Elongation (before ageing) should be within +/ - 15% of the corresponding values of Type Test report. (Please note that test values should be more than the minimum values indicated in relevant standard).	All sizes which meet the criteria	The size which has maximum negative deviation from type test report values will be put on accelerated ageing test. The samples shall be aged in air oven at temperature of 130ºc+/- 2ºc for 5 hours and tested for TS & elongation. Acceptance norms shall be as per IS.	In case the size does not meet the requirement in accelerated ageing test **then all sizes (which had met the criteria) will be put on ageing test as per IS.**
		Sizes which do not meet the criteria	Every size will be put on ageing test as per IS.	----
XLPE insulation	Samples as per relevant IS, from each size of cables in the offered lot,will be put on ageing test as per IS.			

E) Following tests will be carried out on completed cables as per IS on each size of each type (PVC / XLPE insulated)

	1)	Insulation resistance test (Volume resistivity method)
	2)	High voltage test

F) Following tests shall be carried out on only one size of offered lot (comprising of all sizes & types)

	1)	Thermal stability test on PVC insulation and outer sheath
	2)	Oxygen index test on outer sheath

CLAUSE NO.	QUALITY ASSURANCE

	3)	Smoke density rating test on outer sheath
	4)	Acid gas generation test on outer sheath
G) Flammability test as per IEC 60332 - Part- 3 (Category- B) on completed cables as per following sampling plan:		
		This test will be carried out using composite sampling i.e. irrespective of size; cables of one particular type (i.e. armoured PVC insulated, unarmoured PVC insulated, armoured XLPE insulated, unarmoured XLPE insulated) will be bunched together, as per calculations in line with the IEC. All sizes of PVC & XLPE insulated, armoured & unarmoured cables shall be covered. For one particular type, cables with OD less than or equal to 30 mm shall be clubbed together in touching formation while cables with OD greater than 30 mm shall be clubbed together leaving a gap equal to OD of cable having least diameter. Cable OD shall be taken as nominal overall diameter as per NTPC approved datasheet.
H) Following tests shall be carried on one length of each size of each type (PVC / XLPE insulated) of offered lot:		
	1)	Constructional / dimensional check, surface finish, length measurement, sequence of cores, armour coverage, Gap between two consecutive armour wires / formed wires, Sequential marking, drum / Batch (outer sheath extrusion batch)number marking on sheath
	2)	Measurement of Eccentricity & Ovality

CLAUSE NO.	QUALITY ASSURANCE

Control Cables

Attributes / Characteristics / Item / Components / Sub System Assembly	Make, Type & T.C as per relevant standard	Dimension/surface finish	Mechanical properties	Chemical Composition	Spark Test(as applicable)	Electrical properties	Lay length & Sequence	Armour coverage, cross over, looseness, gap between two	Sequential marking/ Batch marking/ surface finish/ cable length	T.S & elongation before & after ageing on outer sheath & insulation	Thermal stability	Anti termite coating on wooden	Constructional requirements feature as per NTPC specification	Routine & Acceptance Tests as per relevant standard & NTPC specification	FRLS Tests
Copper (IS-8130)	Y	Y	Y	Y		Y									
PVC insulation Compound (IS: 5831)	Y		Y			Y				Y	Y				
FRLS PVC Compound (IS-5831, ASTM-D2843, IS10810(Part 58), IEC-60754 Part-1)	Y		Y							Y	Y				Y
Extrusion & curing /Manufacturing of Core		Y			Y						Y				
Core Laying							Y								
Armour wire/strip	Y	Y	Y												
Inner sheath	Y	Y													
Armouring		Y						Y							
Outer Sheathing		Y							Y						
Finished Cable (IS-5831, ASTM-D2843, IS10810(Part 58), IEC-60754 Part-1, IEC 60332 part III cat B)							Y	Y	Y	Y	Y		Y	Y	Y
Wooden drum(IS-10418) /Steel Drum		Y										Y	Y		

Notes:
1. This is an indicative list of tests / checks. The manufacturer is to furnish a detailed Quality Plan indicating the practice and procedure along with relevant supporting documents.
2. Make of all major Bought out items will be subject to NTPC approval.

CLAUSE NO.	QUALITY ASSURANCE

ROUTINE TESTS	**Following routine tests shall be carried out on each drum of finished cables for all sizes.**	
1)	Conductor Resistance test	
2)	High voltage test	
ACCEPTANCE TESTS	**Following Acceptance tests shall be carried out on each size of cables, in the offered lot.**	
A) For Conductor (as per sampling plan mentioned in IS: 1554)		
	1)	Annealing test (Copper)
	2)	Resistance test
B) For Armour Wires / Formed Wires (If applicable) (as per sampling plan mentioned in IS: 1554)		
	1.	Measurement of Dimensions
	2.	Tensile Tests
	3.	Elongation Test
	4.	Torsion Test For Round wires only
	5.	Wrapping Test
	6.	Resistance Test
	7.	Mass of Zinc coating test For G S wires / Formed wires only
	8.	Uniformity of Zinc coating For G S wires / Formed wires only
	9.	Adhesion test For G S wires / Formed wires only
	10.	Freedom from surface defects
C) For PVC insulation & PVC Sheath (as per sampling plan mentioned in IS: 1554)		
	1)	Test for thickness
	2)	Tensile strength & Elongation before ageing (for tests after ageing see “D”)

CLAUSE NO.	QUALITY ASSURANCE

D) Ageing test:

	Criteria	Condition	Test Requirements	Remarks
PVC insulation & outer sheath:	Samples as per relevant IS, from each size of cables in the offered lot, shall be tested for tensile strength & elongation (before ageing). **Tensile & elongation testing shall preferably be done with a computerized machine.** The values will be compared with corresponding values mentioned in the Type Test report accepted by NTPC. These values of Tensile Strength & Elongation (before ageing) should be within +/ - 15% of the corresponding values of Type Test report. (Please note that test values should be more than the minimum values indicated in relevant standard).	All sizes which meet the criteria	The size which has maximum negative deviation from type test report values will be put on accelerated ageing test. The samples shall be aged in air oven at temperature of 130ºc+/- 2ºc for 5 hours and tested for TS & elongation. Acceptance norms shall be as per IS.	In case the size does not meet the requirement in accelerated ageing test **then all sizes (which had met the criteria) will be put on ageing test as per IS.**
		Sizes which do not meet the criteria	Every size will be put on ageing test as per IS.	----

E) Following tests will be carried out on completed cables as per IS on each size:

	1)	Insulation resistance test (Volume resistivity method)
	2)	High voltage test

F) Following tests shall be carried out on only one size of offered lot (comprising of all sizes):

	1)	Thermal stability test on PVC insulation and outer sheath
	2)	Oxygen index test on outer sheath
	3)	Smoke density rating test on outer sheath
	4)	Acid gas generation test on outer sheath

CLAUSE NO.	QUALITY ASSURANCE

G) Flammability test as per IEC 60332 - Part- 3 (Category- B) on completed cable will be carried out as per following sampling plan:		
		This test will be carried out using composite sampling i.e. irrespective of size; cables of one particular type (i.e. armoured, unarmoured) will be bunched together, as per calculations in line with the IEC. All sizes of armoured & unarmoured cables shall be covered.
H) Following tests shall be carried on one length of each size (armoured & unarmoured) of offered lot:		
	1)	Constructional / dimensional check, surface finish, length measurement, sequence of cores, armour coverage, Gap between two consecutive armour wires / formed wires, Sequential marking, drum / outer sheath extrusion's batch number marking
	2)	Measurement of Eccentricity & Ovality

CLAUSE NO.	QUALITY ASSURANCE & INSPECTION

MODULE NO. SQE-16

CABLING, EARTHING, LIGHTNING PROTECTION

ATTRIBUTES / CHARACTERISTICS / ITEMS/COMPONENTS / SUB SYSTEMS	Dimension	Paint shade, paint thickness, adhesion	Pre-treatment of sheet	IP protection	Proof load*	Surface finish	Deflection test*	HV & IR	Galvanise Test (If Applicable)	Functional	Bought out items/Bill of material	Routine tests as per relevant standard & specification	Acceptance tests as per relevant standard & specification	Constructional feature as per NTPC Specification
Wall Mounted-Lighting Panel (IS-513, IS:5, IS:2629, 2633, 6745)	Y	Y	Y	Y		Y		Y		Y	Y	Y	Y	Y
Switch box/junction box/ Receptacles Panel (IS-513, IS:5, IS:2629, 2633, 6745)	Y	Y	Y	Y		Y		Y	Y	Y	Y	Y	Y	Y
Cable glands(BS-6121)	Y													Y
Cable lug	Y													Y
Lighting wire (IS-694)	Y											Y		
Flexible conduits	Y											Y		Y
Conduits (Galvanise & Epoxy) IS-9537 & IS-2629, 2633, 6745	Y		Y						Y			Y		Y
RCC Hume Pipe (IS-458)												Y		
Cable termination & straight through joint (IS 13573)	Y											Y		Y
Cable Trays, bends, tees, crosses, Flexible supports system & accessories IS-513, 2629,2633,6745	Y		Y		Y	Y	Y		Y			Y	Y	Y
Trefoil clamp	Y													Y
GI flats for earthing & lighting protection (IS 2062, 2629, 6745,2633)	Y		Y						Y			Y		Y
GI wire (IS-280)	Y											Y		
Fire Sealing System (BS –476)												Y	Y	Y

.Note:1.This is an indicative list of tests /checks. The manufacturer is to furnish a detailed Quality Plan indicating the practice and procedure along with relevant supporting documents.

2.* Deflection Test on cable trays and Proof Load test on cable trays support system will be as per details given in the NTPC technical specification & approved MQP. The above acceptance tests shall be done only on one sample from each size of offered lot. This test is not applicable on bends, tees & crosses.

3. Make of all items will be subject to NTPC approval.

CLAUSE NO.	QUALITY ASSURANCE & INSPECTION

SQE _10

LT SWITCHGEAR

(MCC, PCC, ACDB, DCDB, FUSE BOARDS, LOCAL PUSH BUTTON STATION, LOCAL MOTOR STARTERS)

ATTRIBUTES / CHARACTERIS-TICS → ↓ ITEMS/ COMPONENTS/ SUB SYSTEM ASSEMBLIY	Make, Model, Type, Rating & TC	Dimensions & Finish	Electrical properties	Mechanical Properties	Chemical properties	Functional & Operational Features as per NTPC Spec.	Item to conform to relevant	Pretreatment as per IS 6005	Paint Shade, Adhesion, Thickness	Functional Checks	Milli-volt drop Test	IR – HV – IR Test	Degree of Protection Routine test as per NTPC spec	All Routine tests as per NTPC
Sheet Steel (IS : 513)	Y	Y		Y	Y		Y							
Aluminum Bus bar Material (IS : 5082)	Y	Y	Y	Y	Y		Y							
Copper Bus bar Material (IS : 613)	Y	Y	Y	Y	Y		Y							
Support Insulator	Y	Y	Y	Y			Y							
Air Circuit Breaker (IS: 13947)	Y	Y				Y	Y			Y	Y			Y
Energy Meters (IS : 13010, 13779)	Y	Y				Y	Y			Y				Y
Power & Aux. Contactors (IS : 13947)	Y	Y				Y	Y			Y				
Protection & Aux. Relays (IS : 3231) (IEC 60255 / IEC 61850)	Y	Y				Y	Y			Y				Y
Control & Selector Switches (IS : 13947)	Y	Y				Y	Y			Y				
CT's & PT's (IS 2705 / 3156)	Y	Y					Y							Y
MCCB (IS : 13947)	Y	Y					Y			Y				
Indicating Meters (IS : 1248)	Y	Y				Y	Y			Y				Y
Indicating Lamps (IS : 13947)	Y	Y				Y	Y			Y				
Air Break Switches (IS : 13947)	Y	Y				Y	Y			Y				
Control Terminal Blocks	Y	Y				Y	Y							

CLAUSE NO.	QUALITY ASSURANCE & INSPECTION

LT SWITCHGEAR

(MCC, PCC, ACDB, DCDB, FUSE BOARDS, LOCAL PUSH BUTTON STATION, LOCAL MOTOR STARTERS)

ATTRIBUTES / CHARACTERIS-TICS → ↓ ITEMS/ COMPONENTS/ SUB SYSTEM ASSEMBLIY	Make, Model, Type, Rating & TC	Dimensions & Finish	Electrical properties	Mechanical Properties	Chemical properties	Functional & Operational Features as per NTPC Spec.	Item to conform to relevant Standards	Pretreatment as per IS 6005	Paint Shade, Adhesion, Thickness &	Functional Checks	Milli-volt drop Test	IR – HV – IR Test	Degree of Protection Routine test as per NTPC spec	All Routine tests as per NTPC spec. & IS
Fuse (IS 13703)	Y	Y				Y	Y							
Control Transformer (IS : 12021)	Y	Y				Y	Y			Y				Y
Push Buttons (IS : 4794)	Y	Y				Y	Y			Y				
Transducer (IEC : 60688)	Y	Y				Y	Y			Y				Y
MCB (IS : 8828)	Y	Y				Y	Y			Y				
Breaker Handling Trolley	Y	Y				Y			Y	Y				Y
Synthetic Rubber Gasket (IS : 11149)	Y	Y		Y	Y		Y							
LT SWITCHGEAR (IS : 8623)	Y	Y				Y	Y	Y	Y	Y		Y	Y	Y

Notes:

1. This is an indicative list of tests / checks. The manufacturer is to furnish a detailed Quality Plan indicating the practice and procedure along with relevant supporting documents.
2. Makes of all major Bought Out Items will be subject to NTPC approval.

CLAUSE NO.	QUALITY ASSURANCE & INSPECTION

STATION LIGHTING SQE_17

Item Components / Sub System / Assembly — Attributes / Characteristics	Make, Type , Rating/ TC	Dimension	Pre-Treatment of sheat	Paint Shade Thickness Adhesion & Finish	Galvanization Tests	IP Test	Bought Out Items/ Bill of Material	HV & IR	Functional Check as per spec.	Constructional Feature as per NTPC spec.	Routine Test as per relevant std and spec	Acceptance Test as per relevant std and spec	Item to conform to relevant standard
Luminaries (IS-10322 Part-5 Sec.1 (non –LED type)	Y					Y		Y			Y	Y	Y
Electronic Ballast	Y										Y	Y	Y
Lighting Wire (IS-694)	Y										Y		
Fans (IS-374)	Y										Y		
Pole (IS-2713)	Y			Y						Y	Y	Y	
Lamps (IS-9800, IS-9974)	Y										Y	Y	
Lighting Mast (with raise & lower lantern type)	Y	Y			Y					Y	Y	Y	
Wall Mounted Lighting Panel (IS-513, IS-5)	Y	Y	Y	Y	Y	Y	Y	Y	Y	Y	Y	Y	
Switch Box/ Junction Box/Receptacles/ Local Push Button Station / Lighting Panel (IS-513, 2629, 2633, 4759, 6745)	Y	Y	Y	Y	Y	Y	Y	Y	Y	Y	Y	Y	
Cable Gland (BS-6121)	Y	Y									Y		
Cable Lug (IS-8309)	Y	Y									Y		
Flexible Conduit	Y										Y		
Lighting Transformer (IS-11171)	Y									Y	Y		
Epoxy & Galvanised Conduit (IS-9537, 2629, 2633, 4759, 6745)	Y	Y									Y		Y

CLAUSE NO.	QUALITY ASSURANCE & INSPECTION

LED Luminaire quality requirements:

1) LED modules to conform to IS: 16103 part 2. Manufacturer to issue a certificate of compliance for the same.

2) Control gear to conform to IS 15885 part 2 section 13. Manufacturer to issue a certificate of compliance for the same.

3) LED luminaire to conform to IS 16107 part 2 section 1. Manufacturer to issue a certificate of compliance for the same.

4) LED luminaire marking to be as per IS 16107 part 2 section 1. Manufacturer to issue a certificate of compliance for the same.

5) Acceptance tests as per IS 16107 part 2 section 1 to be carried out on LED luminaire except long duration tests i.e. a) Chromaticity coordinates & correlated color temperature (CCT); b) Color rendering index (CRI). Manufacturer will submit a COC for above tests i.e. CCT & CRI

6) LED driver make, model, type & rating may be as per recommendations of LED module manufacturer.

Notes:
1. This is an indicative list of tests / checks. The manufacturer is to furnish a detailed Quality Plan indicating the practice and procedure along with relevant supporting documents.
2. Make of all major Bought Out Items will be subject to NTPC approval.

CLAUSE NO.	QUALITY ASSURANCE & INSPECTION

INSTRUMENTATION CABLE

TESTS / ITEMS	Conductor Resistance ® & (A)	High Voltage ® & (A)	Insulation Resistance ® & (A)	Constructional detail, dimensions (A)	Outer-Sheathe/core marking, end sealing (A)	Thermal Stability (A) +	Visual, Surface finish (A) +	Electrical Parameters ** (A) +	Persulphate Test (A) +	Overall/Coverage/Continuity (A)	Swidesh chimney Test (SS-4241475) (A) ++	FRLS Test * (A) ++	Tensile & Elongation before & after aging (A) ++	Vol. Resistivity. at room & Elevated Temp. (A) ++	Spark test report review ®
1. Instrument cable twisted and shielded															
Conductor(IS-8130)	Y			Y			Y								
Insulation(VDE-207)				Y	Y	Y	Y						Y		Y
Pairing/Twisting				Y	Y		Y								
Shielding				Y			Y			Y					
Drain wire	Y			Y			Y		Y	Y					
Inner Sheath				Y	Y	Y	Y					Y	Y		
Outer Sheath				Y	Y	Y	Y					Y	Y		
Over all cable	Y	Y	Y	Y	Y		Y	Y			Y			Y	
Cable Drums(IS-10418)				Y			Y								

Note : High Temp. cables shall be subjected to tests as per VDE-207(Part-6) Compensating cables shall be checked for Thermal EMF/Endurance test as per IS 8784.

Note : This is an indicative list of tests/checks. The manufacture is to furnish a detailed Quality Plan indicating his practice & Procedure along with relevant supporting documents during QP finalization for all items.

Note : ® - Routine Test A - Acceptance Test Y - Test Applicable

Note : Sampling Plan for Acceptance test shall be as per IS 8784 (As applicable)

- * FRLS Tests: Oxygen / Temp Index (ASTM D-2863), Smoke Density Rating (ASTM – D 2843), HCL Emission (IEC-754-1)
- ** Characteristic Impedance, Attenuation, Mutual Capacitance, Cross Talk (As applicable)

\+ Sample size will be One No. of each size/type per lot.

++ Sample size will be One No. sample for complete lot offered irrespective of size/type.