FIRST ANGLE PROJECTION

(ALL DIMENSIONS ARE IN mm)

DRG. NO 2-139-01-30039/03 | SH. 01 OF 01

THE INFORMATION ON THIS DOCUMENT IS THE PROPERTY OF BHARAT HEAVY ELECTRICALS LIMITED. IT MUST NOT BE USED DIRECTLY OR INDIRECTLY IN ANY WAY DETRIMENTAL TO THE INTEREST OF THE COMPANY

COMPUTER FILE NAME 2EA0039D.DWG

REF. DRG. NO.

SIGN. AND DATE

INVENTORY NO

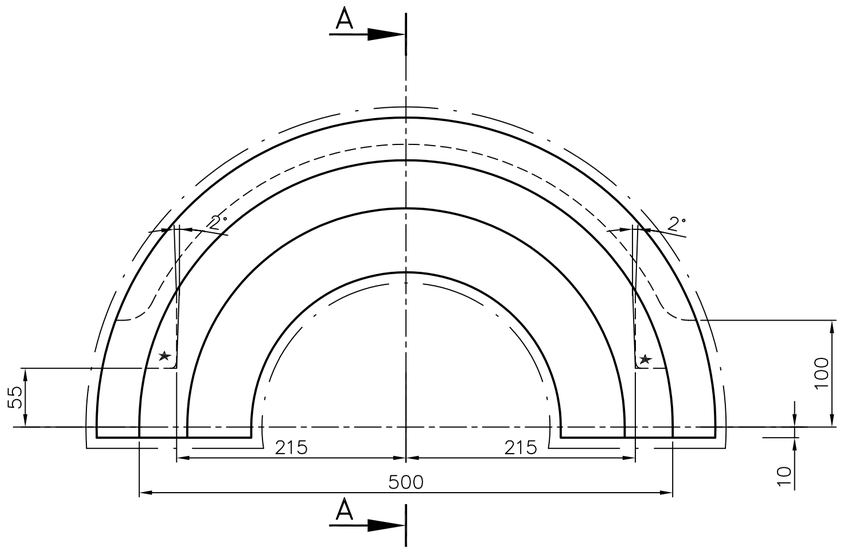

SECTION–AA

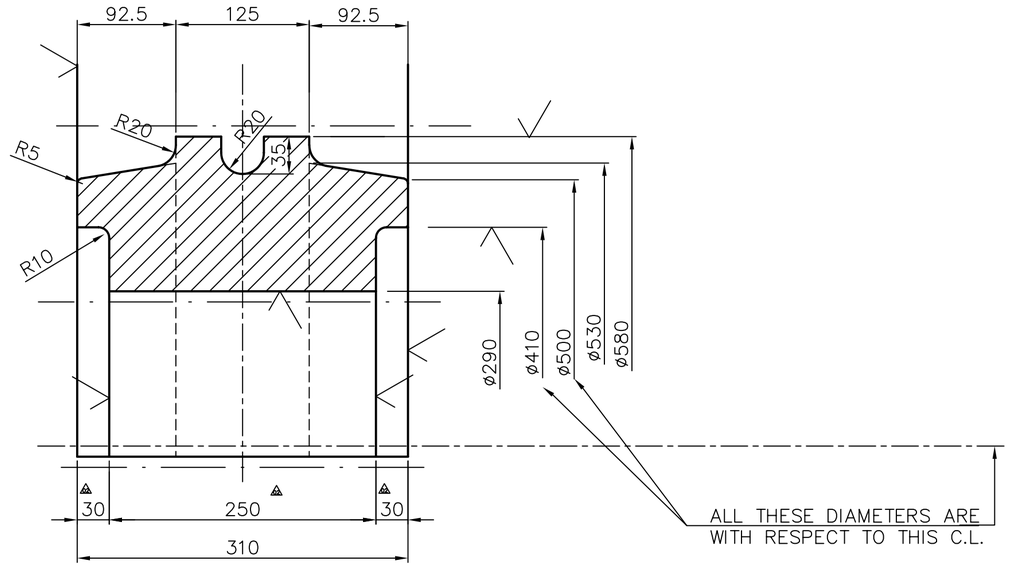

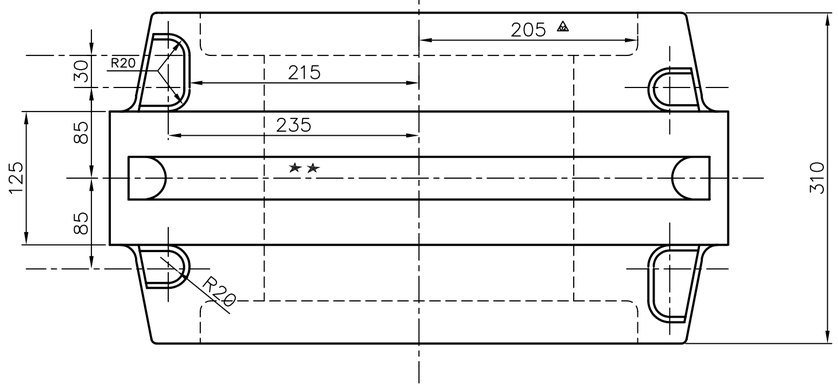

NOTE

1. MATERIAL: AS SPECIFIED IN HY 19566 OR ASTM A 216 GR.WCA.
2. GENERAL SUPPLY CONDITIONS: HY 19566.
3. THE DRAWING IS OF ROUGH CASTING ,TO BE PROOF MACHINED AT FOUNDRY ON THE SURFACE MARKED BY LINE _____ . _____
4. THE CASTING SHALL BE SUPPLIED IN NORMALISED ,PROOF MACHINED AND STRESS RELEIF ANNEALED CONDITION.
5. PERMISSABLE DEVIATIONS ON UNTOLERENCED CASTING DIMENSIONS AS PER AA0230402,CLASS–IV.
6. MECHANICAL PROPERTIES AS PER HY 19566.
7. ✓ MARKED SURFACES WILL BE FINISH MACHINED AT B.H.E.L. AND THE NECESSARY MACHINING ALLOWANCES ARE INCLUDED.
8. BOLT HOLE DEPRESSIONS MARKED ★ SHALL BE IN HALF THE QUANTITY AND PERIPHERAL GROOVE MARKED★★ SHALL BE IN THE REMAINING HALF QUANTITY.BOTH DEPRESSIONS AND PERIPHERAL GROOVE SHALL NOT BE IN THE SAME HALF CASTING.
9. THE CASTING SHALL BE MANUFACTURED UNDER LLOYDS INSPECTION.
10. THE CASTINGS SHALL BE ULTRASONICALLY TESTED AS PER AA 0850104.ACCEPTABILITY GRADE–2.

ALL DIMENSIONS ARE IN mm.

ITEM NO.	DESCRIPTION	DRAWING NO.	VAR. NO.	RAW MATERIAL SIZE OR CASTING DRG. NO. OR FORGING DRG. NO.	MATERIAL CODE / MATERIAL SPECN.	NET WT.	GROSS WT.
	BEARING SHELL ø300 (CASTING)				HY19566	190	
						4	

VAR.NO	MATERIAL CODE	QTY.	REMARKS
1	TG9216653183	2	WITH ★ MARKED IMPRESSION AND WITH OUT GROOVE(★ ★).
2	TG9216653191	2	WITH GROOVES (★ ★) AND WITHOUT ★ MARKED IMPRESSION.

REV.	DATE	ALTD	APPD.	ZONE	
03	20.09.96	CHD.			MATL.CODE FOR BOTH TYPES OF SHELLS INCLUDED. ORIGINAL DRG.REDRAWN.
02	22.02.96	CHD.			DIM 210 CHANGED TO 205 DIM 35 CHANGED TO 30. DIM 240 CHANGED TO 250.
01	12.12.94	CHD.			NOTES NO.9&10 ADDED. I.D.MACHINING INCLUDED.

THE FOLLOWING CONDITIONS APPLY EXCEPT OTHERWISE STATED.

1. REF. TO HY 0230261 FOR UNS TOLERANCES.
2. CHAMFER M/CD. SHARP EDGES 1. AT 45°.
3. INTERNAL M/CD. CORNER RADII 1 TO 0.7
4. THE SURFACE ROUGHNESS WHEREVER NOT SHOWN SHALL BE TAKEN FROM THE SURFACE ROUGHNESS SHOWN OUT SIDE THE BACK SLASH GIVEN ON THE TOP MOST RIGHT CORNER OF THE DRG.

BHEL-HYD SAP EST

TYPE OF PRODUCT TARI–800–24P

NAME OF CUSTOMER/PROJECT

BHARAT HEAVY ELECTRICALS LIMITED HYDERABAD

	NAME	SIGN	DATE	NO.OF VAR.
DRN.	DAVID	RESTRICTED USE	15.03.04	NA
CHD.	G.C.REDDY		15.03.04	
APPD.	S.BHUTCHA		15.03.04	

DEPT.	CODE	SCALE	WEIGHT (KG)	REF. TO ASSY DRG.	ITEM NO.	NO.OF ITEMS
EME	425	1:4	190	NA	NA	4

TITLE BEARING SHELL ø300 (CASTING)

CARD CODE NA

DRAWING NO. 2–139–01–30039 REV. 03

SHEET NO. 01 NO OF SHEETS 01