FIRST ANGLE PROJECTION (ALL DIMENSIONS ARE IN mm)

DRG. NO. 2-135-04-31002/02

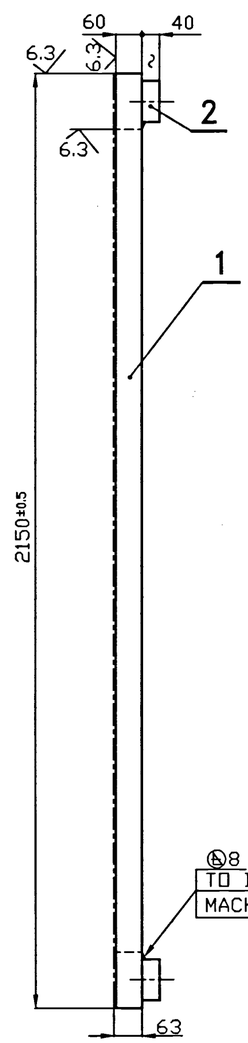

THIS DIMENSION MUST BE CROSS CHECKED WITH CORE DIAMETER MEASURED ACROSS SUPPORT BEAM EDGES.

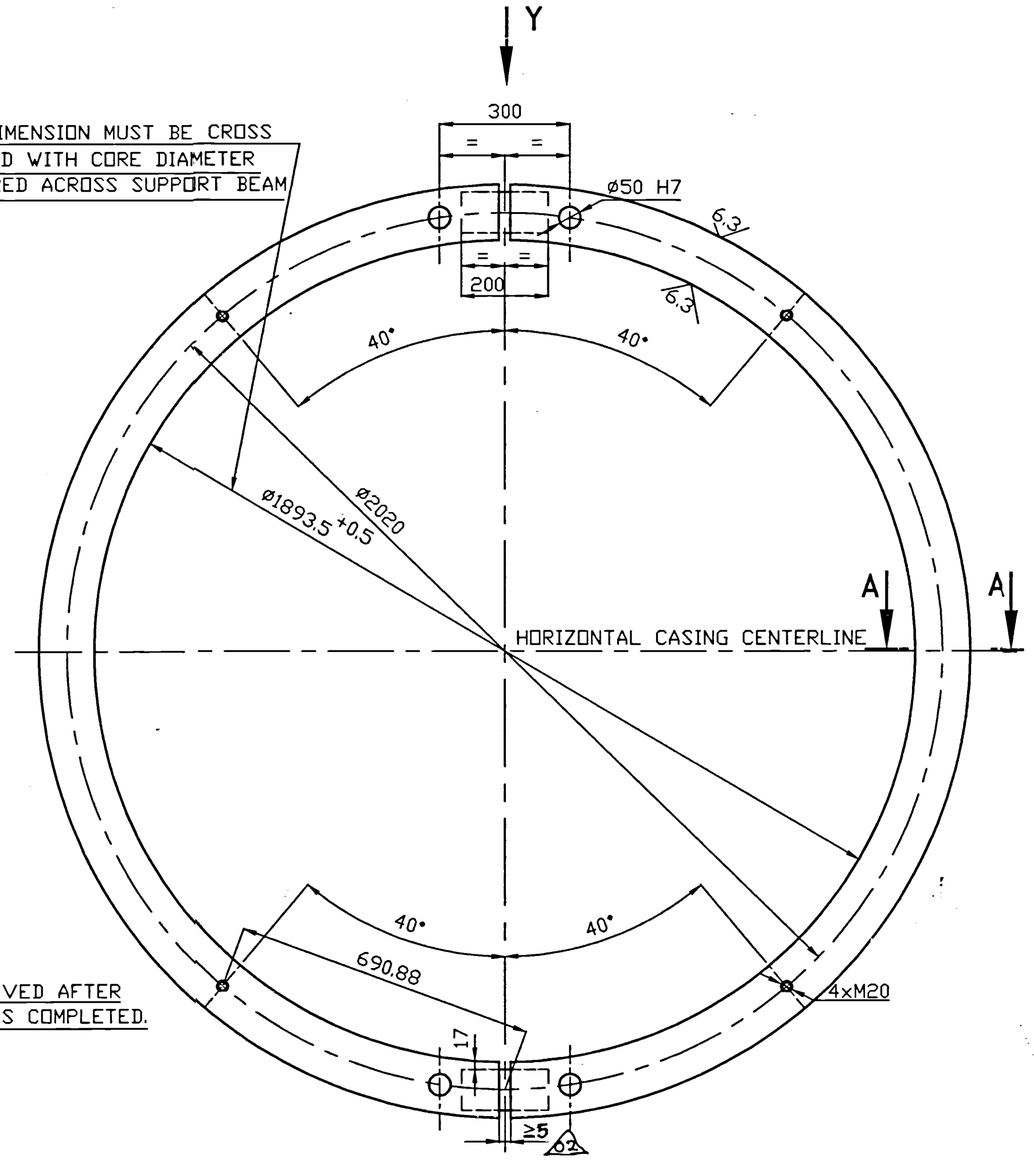

8 TO BE REMOVED AFTER MACHINING IS COMPLETED.

SECTION A-A

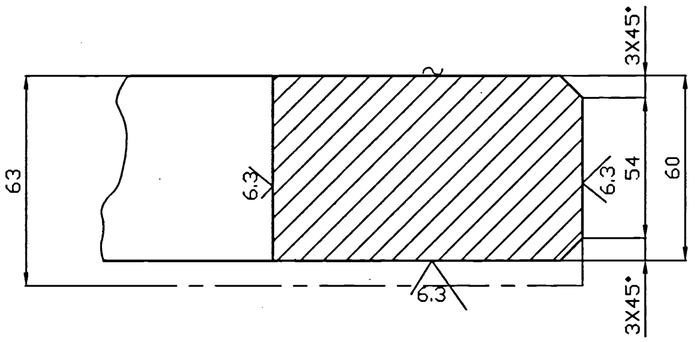

VIEW-Y

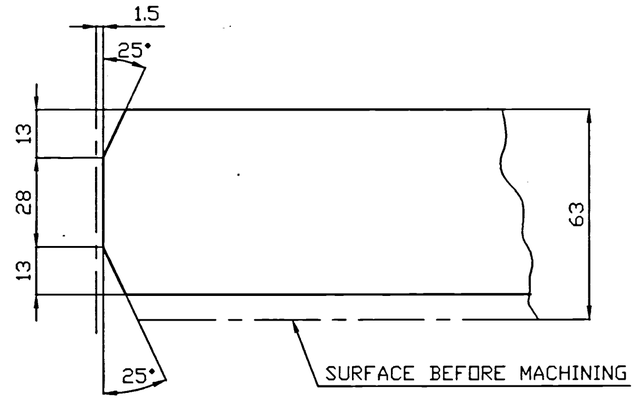

01

WPS NO: WE 006

THE INFORMATION ON THIS DOCUMENT IS THE PROPERTY OF BHARAT HEAVY ELECTRICALS LIMITED. IT MUST NOT BE USED DIRECTLY OR INDIRECTLY IN ANY DETRIMENTAL TO THE INTEREST OF THE COMPANY

INVENTORY NO | SIGN. AND DATE | REF. DRG. NO. T-RNG.DWG

REV	DATE	ALTERED	CHECKED	APPD	REV.	DATE	ALTERED	CHECKED	APPD
02	23-9-99	TR Kumar	Sulochana	[illegible]	01	19/7/95	[illegible]	[illegible]	[illegible]
	GAP 3 mm CHANGED To 5 mm & Drg Redrawn				ZONE B2	8 HOLES REMOVED & WPS NO ADDED.			

TYPE OF PRODUCT OR NAME OF CUSTOMER/PROJECT: TARI-800-24P

BHARAT HEAVY ELECTRICALS LTD. HYDERABAD

	NAME	SIGN.	DATE	NO.OF VAR.
DRN.	T.R.KUMAR	[signature]	26/05/94	
CHD.	T.K.RAJU	[signature]	26/5/94	NA
APPD.	M.M.RAJU	[signature]	26/5/94	

DEPT.	GRADE OF TOL.DIM.	SCALE	WEIGHT (KG)	REF. TO ASSY DRG.	ITEM NO.	NO.OF ITEMS
EME CODE 425	E/M/F	NTS	409	1-135-04-31001	1/1-2	2

TITLE: RING

CARD CODE: NA

DRAWING NO. 2-135-04-31002 REV. 02

SHEET No. 1 NO OF SHEETS 1