THD.SPCN.	PITCH	MAJORØ max. / min.	PITCHØ max. / min.	WIREØ	OVER WIREØ max. / min.
M145-6g	2	144.962 / 144.682	143.663 / 143.473	1.35	145.983 / 145.793

ALL DIMENSIONS ARE IN MILLIMETERS

DEVIATIONS OF UNTOLERANCED DIMENSIONS TO BE ASPER IS: 2102–1969 MEDIUM.

CASE HARDENED TO A DEPTH OF 2mm AND HARDNESS TO BE 55±3HRC

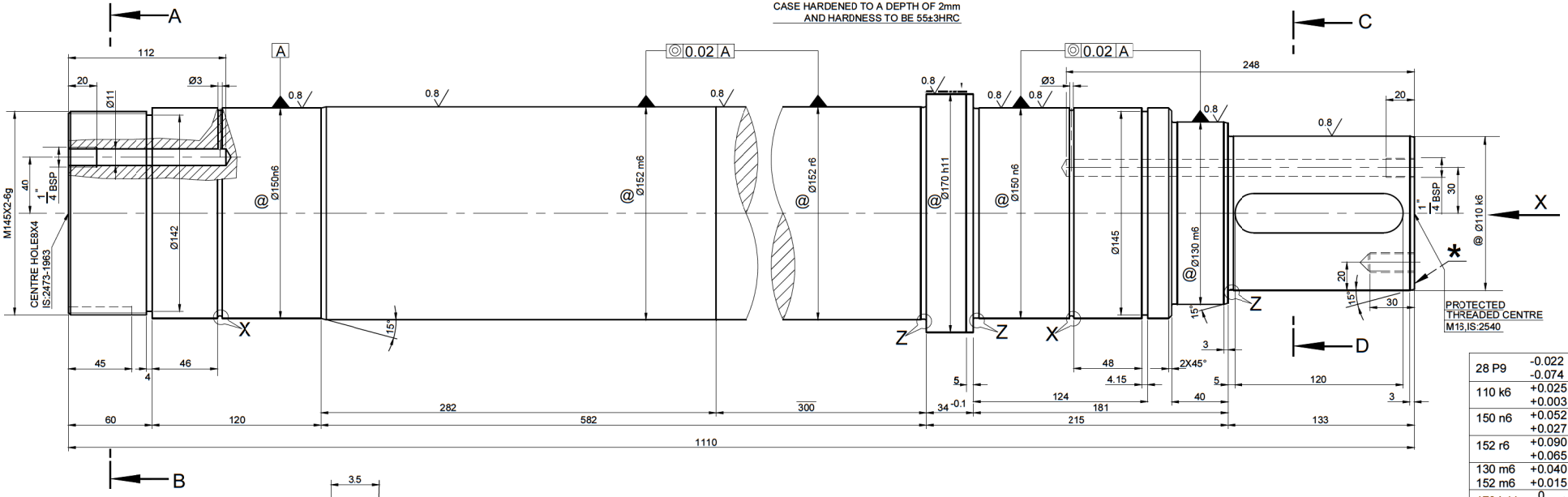

28 P9	-0.022 / -0.074
110 k6	+0.025 / +0.003
150 n6	+0.052 / +0.027
152 r6	+0.090 / +0.065
130 m6	+0.040
152 m6	+0.015
170 h11	0 / -0.250

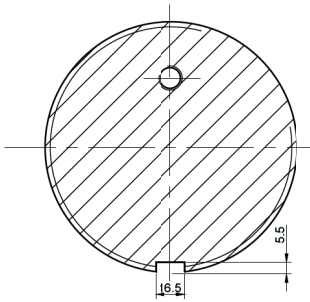

SECTION-AB

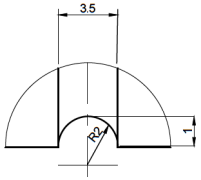

DETAIL-X

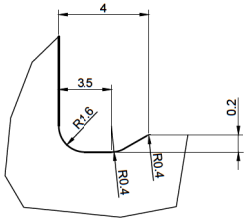

DETAIL-Z

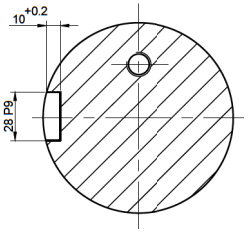

SECTION-CD

VIEW-X

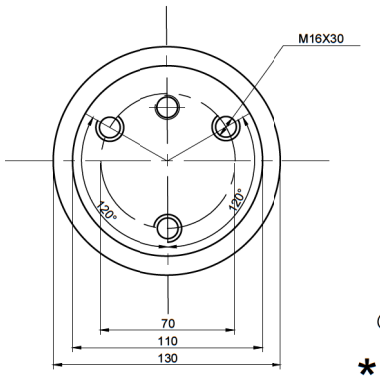

NOTE: ANY ONE OF THE FOLLOWING MATERIAL SHALL BE USED

MATERIAL: 40Cr4Mo3 IS: 4367–1991

CHEMICAL COMPOSITION

C	Si	Mn	Cr	Mo
0.35	0.10.	0.50	0.90	0.20
0.45	0.35	0.80.	1.20	0.35

HEAT TREAT TO 80–95 Kg/mm^2

HARDNESS 22–28 HRC

EQUIVALENT MATERIAL: 42CrMo4 (DIN 1.7225)

@ MARKED DIMENSIONS ARE TO BE GROUND BETWEEN CENTRES.

* MARK MATERIAL CODE No.: 69 07 21 0029 ,FIRMS NAME & P O No.

NOTE TO SUPPLIER

01) MATERIAL CHEMISTRY–NABL ACCREDITED LAB TEST CERTIFICATE IS TO BE PROVIDED

02) HARDNESS, HEAT TREATMENT & TENSILE TEST CERTIFICATES ARE OBTAINED FROM THE HEAT TREATERS IS TO BE PROVIDED

03) UITRASONIC TEST TO BE CONDUCTED ON ENTIRE SURFACE AND SHALL BE CERTIFIED BY N D T LEVEL–2 QUALIFIED PERSONNEL AS PER SNT–TC–1A

04) THREADED AREA TO BE PROPERLY PROTECTED, COATED WITH RUST PREVENTIVE OIL AND PACKED TO AVOID DAMAGES DURING TRANSIT

CAUTION: THE INFORMATION ON THIS DOCUMENT IS THE PROPERTY OF BHARAT HEAVY ELECTRICALS LTD
IT MUST NOT BE USED DIRECTLY OR INDIRECTLY IN ANYWAY DETRIMENTAL TO INTEREST OF THE COMPANY

Bharat Heavy Electricals Ltd
SEAMLESS STEEL TUBE PLANT
TIRUCHIRAPALLI – 620014

	NAME	SIGNATURE	DATE
DRN	R.KUMAR		25.09.10
CHD			
APPD	S.KARUPPASAMY		

REV	DATE	ALTERED / APPROVED
08	25.04.18	

ZONE

VIEW X ADDED

DEPT / CODE / GRADE OF UNTOL. DIM C/M/F / SCALE 1:2 5:1 / WEIGHT (Kg) 128.5

REF TO ASSY DWG NO 00.....012 / REF TO OLD DWG NO 0121006–23.002 / ITEM NO 4

TITLE: SHAFT (REELER BOTTOM)

CARD CODE U 01

DRAWING NO: 20.ST.110.01.079 / REV 08

C:\Users\te-01\Desktop\CAD DRG MODIFIED\20-ST-110-01-079.dwg, 5/26/2018 10:58:37 AM, DWG To PDF.pc3