| REV. | DATE | DESCRIPTION | APPD. |
|---|---|---|---|
| | | | |
| | | | |
| | | | |

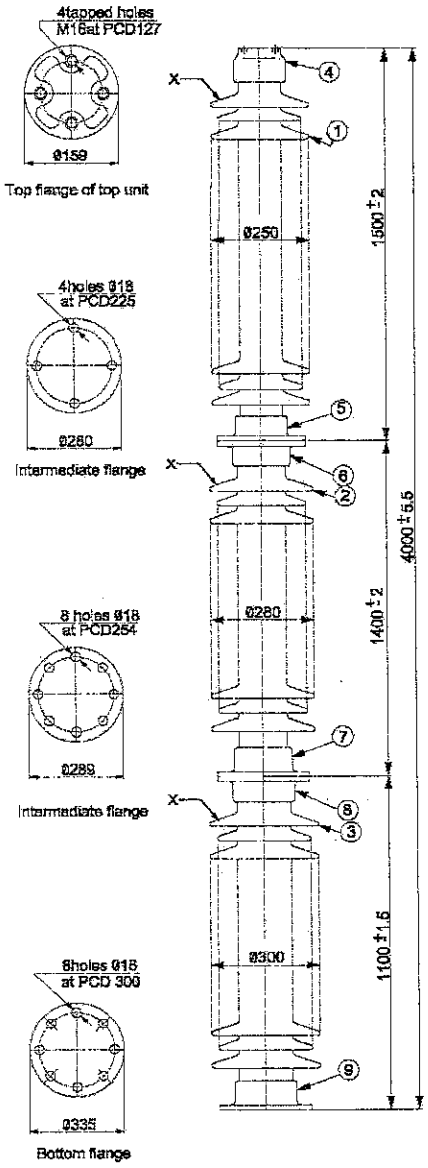


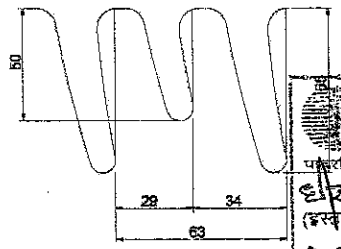


Cat - I

| Sr no. | Parameters | As per IEC | Values | Sr no. | Parameters | Values | As per IEC |
|---|---|---|---|---|---|---|---|
| 1 | C= d2 | ≥30 | 49.8 | 5 | P1-P2 | 15 | 15 |
| 2 | S/P= 53/65 | >0.8 | 0.96 | 6 | Inclination of shed top/bottom | 15°/8° | - |
| 3 | d1/d1 d2/d2 | < 5 | 4.85/4.84 | 7 | Profile factor (2P1+2P2+S)/1 | 1.127 | >0.7 |
| 4 | Average dia Dm | - | 204.16 | 8 | Creepage factor = l1/S1 | 3.80 | < 4 |

Notes:-

- Shed profile meets all the requirements of IEC:815 for pollution level IV (Very Heavy polluted)
- Name of Mfg.,trade mark,month & year of Manufacture.,Sr.no. to be marked at "x"
- All ferrous parts to be hot dip galvanized as per IS:2633,IS:4759
- Colour of glazed BROWN
- Zinc used for galvanising shall be grade 99.95 as per IS: 209
- Flat washers shall have diameter 2.5 times that of the bolt diameter & of suitable thickness.

पावरग्रिड
श्रेणियां
I फेब्रिकेशन / निर्माण / हेतु अनुमोदित / आगे बढ़ें।
II फेब्रिकेशन / निर्माण / हेतु अनुमोदित / बशर्ते दी गई टिप्पणियों एवं आशोधनों को सम्मिलित किया जाए। कृपया आशोधित दस्तावेज अनुमोदनार्थ प्रस्तुत करें।
III. टिप्पणियें सम्मिलित कर पुनः अनुमोदनार्थ प्रस्तुत करें।
IV. सूचनार्थ एवं रिकार्ड हेतु।
V. अनुमोदित नहीं।
(हस्ताक्षर)
DE
(पदनाम)
20/9/11
(तिथि)
पावर ग्रिड कार्पोरेशन ऑफ इंडिया लिमिटेड
अभियांत्रिकी (उपकेन्द्र) गुड़गाँव, हरियाणा

## NOTES

| | | | |
|---|---|---|---|
| Applicable Standards | | | IS:2544,IEC:168,IEC:273,IEC:815 |
| **DIMENSIONS** | | | |
| Height | | mm | 4000 ±5.5 |
| Min. Creepage Distance | | mm | 13020 |
| Protected Creepage Distance | | mm | 5420 |
| Dry arcing distance | | mm | 3440 |
| Heavy Polluted | | | Level IV (Very Heavy Polluted) |
| **MECHANICAL VALUES** | | | |
| Cantilever Strength | | kgf. | 800 |
| Torsional Strengh | | kgfm | 600 |
| Tension Strength | | kgf | 8000 |
| Compression Strength | | kgf | 27000 |
| **ELECTRICAL VALUES** | | | |
| Nominal System Voltage | | kV | 400 |
| Highest System Voltage | | kV | 420 |
| P.F.Withstand Voltage | Dry | kV | 800 |
| | Wet | kV | 725 |
| P.F.Flashover voltage | Dry | kV | 875 |
| | Wet | kV | 750 |
| Impulse Withstand Voltage | | kVp | 1800 |
| Impulse Flashover Voltage | +ve | kVp | 1925 |
| | -ve | kVp | 2000 |
| Corona extinction voltage | | kV | 320 |
| Switching Impulse withstand voltage | | kVp | 1175 |
| **RIV TEST** | | | |
| Test voltage to ground | | kV | 305 |
| Max. RIV at 1000KHz | | µV | 500 |
| **PACKING DETAILS** | | | |
| Net Weight(approx) | | Kg | 384 |

| SR NO. | DESCRIPTION | DRG. No. | WEIGHT | MATERIAL | QTY. | REMARKS |
|---|---|---|---|---|---|---|
| 14 | Flat washer M16 | | | MS HDG | 40 | |
| 13 | Spring washer M16 | | | MS HDG | 20 | |
| 12 | Hex. bolt&nut M16X75 | | | MS HDG | 16 | |
| 11 | Hex. bolt&nut M16X60 | | | MS HDG | 4 | |
| 10 | Hex. bolt M16X35 | | | MS HDG | NIL | |
| 9 | Bottom flange | | | MCI/SGI | 1 | |
| 5-8 | Intermediate flanges 5 to 8 | | | MCI/SGI | 1 each | |
| 4 | Top flange | | | MCI/SGI | 1 | |
| 1-3 | Porcelain Assembly | | | Porcelain | 1 | |

| | |
|---|---|
| Client | Power Grid Corporation of India Limited |
| LOA No. | C-47908-S119A-3/G3/NOA-I/3474 & C-47901-S119A-3/G3/NOA-II/3475 DT 21.09.2010 |
| Project Name | SUBSTATION PACKAGE-F FOR EXTENSION OF 400KV RAIPUR S/S,RAJGARH S/S,BOISAR S/S,WARDHA S/S AND BHADRAWATI S/S |
| S/S - | 400kV BOISAR S/S, |
| EPC Contractor | M/s JYOTI STRUCTURES LIMITED,Mumbai |

| | | | |
|---|---|---|---|
| TITLE | 400/420kV. Solid core Insulators For Isolators/BPI/WaveTrap | | |
| | Creepage - 31 mm/kV | | |
| REF:- | PGCIL | | |
| DRN | Gpanchal | 04/10/2010 | PROJECTION |
| CKD | DBC | 04/10/2010 | |
| APD | DBC | 04/10/2010 | |
| ALL DIMENSIONS ARE IN mm. | | SCALE: | NTS |
| Drg. No. | | Rev.No. | |
| 987320 | | 0 | |

| | |
|---|---|
| Grey :2 | |
| Brown:1 | 987320 |
| Finish | Code |
| Product code | |

ABI **ADITYA BIRLA INSULATORS**
**HALOL - INDIA**

ALL INFORMATION CONTAINED IN THIS DOCUMENT IS CONFIDENTIAL & SHOULD NOT BE USED WITHOUT PROPER CONSENT OF ADITYA BIRLA INSULATORS