NTPC LIMITED

TELANGANA SUPER THERMAL POWER PROJECT PHASE-I (2X800 MW) SG PACKAGE

TECHNICAL SPECIFICATION
FOR
CHEMICAL DOSING SYSTEM

SPECIFICATION NO.: PE-TS- 424-154-A001 R01

BHARAT HEAVY ELECTRICALS LIMITED
POWER SECTOR
PROJECT ENGINEERING MANAGEMENT
NOIDA

SECTION	DESCRIPTION	PAGE NO.
	PROJECT INFORMATION	1
SECTION – I	SPECIFIC TECHNICAL REQUIREMENTS	18
SECTION – IA	SPECIFIC TECHNICAL REQUIREMENTS (MECHANICAL)	19
	ANNEXURE I : QUALITY PLAN	27
	ANNEXURE II :SUB VENDORS LIST	32
	ANNEXURE III :DRAWING DOCUMENTS DISTRIBUTION PROCEDURE	58
	ANNEXURE IV :PAINTING SPECIFICATION	60
	ANNEXURE V :MANDATORY SPARES LIST	67
	ANNEXURE VI: LIST OF ERECTION & COMMISSIONING SPARES	70
	ANNEXURE VII :DRAWING/DOCUMENTS SUBMISSION SCHEDULE	72
	ANNEXURE VIII :FORMAT FOR OPERATION AND MAINTENANCE MANUAL	75
	P&IDs FOR CHEMICAL DOSING SYSTEM	79
	DATA SHEET-A	83
SECTION – IB	SPECIFIC TECHNICAL REQUIREMENTS (ELECTRICAL)	86
	ELECTRICAL SCOPE BETWEEN BHEL AND VENDOR	88
	ELECTRICAL LOAD DATA FORMAT	90
	MOTOR DATA SHEET-A	91
SECTION – IC	SPECIFIC TECHNICAL REQUIREMENTS (CONTROL & INSTRUMENTATION)	92
SECTION – II	GENERAL TECHNICAL REQUIREMENT	
SECTION – IIA	GENERAL TECHNICAL REQUIREMENT (MECHANICAL)	95
SECTION – IIB	GENERAL TECHNICAL REQUIREMENT (ELECTRICAL)	103
SECTION – IIC	GENERAL TECHNICAL REQUIREMENT (CONTROL & INSTRUMENTATION)	126
SECTION - III	SCHEDULE OF PRE BID CLARIFICATIONS	184
	SCHEDULE OF DEVIATION WITH COST OF WITHDRAWAL	185
	COMPLIANCE CUM CONFIRMATION SCHEDULE	186
	SCHEDULE OF DECLARATION	187

PROJECT INFORMATION

SUB-SECTION–I-B

PROJECT INFORMATION

CLAUSE NO.	PROJECT INFORMATION

TELANGANA STPP PHASE-I (2X800 MW)

1.00.00 BACKGROUND

Ramagundam Super Thermal Power Project (RSTPP) in District Karimnagar of Telangana was conceived as a coal based super thermal power plant for implementation by NTPC. RSTPP is presently operating with 2600 MW (3x200 MW + 4x500 MW) installed capacity and are under commercial operation.

As per A.P. Re-organisation Act 2014, NTPC has been mandated to set up 4000 MW Coal fired thermal power plant for Telangana State.

A meeting of NTPC Senior management team with the Hon'ble Chief Minister of Telangana was held on 8th July 2014. Thereafter, a multi-disciplinary team from NTPC made a site visit along with Singareni Collieries Company Limited (SCCL) officials on 7th & 8th August 2014 to explore the land availability around Ramagundam STPS and SCCL area for locating 4000 MW power plant.

Based on the team visit, NTPC informed Principal Secretary to Hon'ble Chief Minister, Govt. of Telangana vide dated 22.08.2014 confirming that NTPC is planning to set up 2 units of 800 MW under the name Telangana STPP Phase-I within NTPC's existing Ramagundam Station and 3 units of 800 MW under Phase-II of the project. After examining the various areas surveyed with M/s SCCL officials, it is found that the Phase-II can be set up in the land where M/s BPL Project was to come up at nearby areas (presently under sub-judice) only. Considering the location and optimization of available space at both locations to accommodate 4000 MW, 800 MW units have been proposed.

2.00.00 PROJECT HIGHLIGHTS

2.01.00 Location

Telangana Super Thermal Power Project (TnSTPP), Phase-I has been located within the MGR unloading bulb of NTPC's Ramagundam Super Thermal Power Station and situated at 18° 44' 47" (N) to 18° 45' 30" (N) and longitude 79° 28' 06" (E) East to 79° 28' 36" (E).

TnSTPP is located at about 51 km from district headquarter Karimnagar and at about 1 km near Ramagundam village. The site is well connected through NH-07 and NH-16 through (Hyderabad-Mancherial Road popularly known as Rajiv Rahadari). Nearest railway station Ramagundam is about 5 km from the plant which lies on the main Kazipet-Balarshah Broad Gauge line of South Central Railway. The nearest commercial airport Hyderabad is at a distance of about 210 km.

Vicinity Plan of the proposed project is placed at **Annexure -I**.

3.00.00 BASIC INPUTS

3.01.00 Land

The proposed two units of 800 MW capacity will be set up in the available land (about 250 acre) in MGR unloading bulb area within existing premises of RSTPP.

For ash disposal land at two different locations has been identified. First location is 662 acre plot (one of three plots allotted to M/s BPL power plant. However, all the three plots have been taken back by State Govt. due non development and are sub-judice) / Govt. land to

CLAUSE NO.	PROJECT INFORMATION
	the tune of 600 acre being offered by State Govt. and the second is Medipally mine void of M/s SCCL. The initial disposal area (662 acre plot earlier allotted to M/s BPL) is located at about 10 km from the plant. The alternate Govt. land (600 acre) is located at about 12 km. Both Bottom ash and fly ash will be disposed-off to above area till the Medipally mine void made available for disposal. Subsequently, fly ash will be disposed-off in mine void, located about 10 km from the plant, while bottom ash will continue to be disposed-off in first location (662 acre plot) / the alternate Govt. land (600 acre).
3.02.00	Water The expected source of water for the project is from Yellampally Barrage, on Godavari River, at a distance of about 12 km from the proposed plant. Special Chief Secretary (Energy) have assured that water shall be made available for the proposed power plant. Make up water requirement for this project would be about 4600 cum/hr (about 45 Cusecs) with ash water recirculation system and about 5900 cum/hr (about 58 Cusecs) with once through ash water system. Re-circulating type CW system with Induced draft cooling towers have been envisaged for the project.
3.03.00	FUEL
3.03.01	Coal Requirement, Availability and Linkage Coal requirement for the project is estimated about 6.73 million tonne/annum (about 18430 T/day) corresponding to 90% PLF considering station heat rate of 2247.97 kcal/kWh. Presently coal is received from SCCL and the same is transported through MGR system. Govt. of Telangana has conveyed in-Principal approval for transfer of coal linkage accorded to erstwhile BPL plant for 600 MW (3.5 MTPA) to NTPC for the project vide letter from Govt. of Telangana dated 13.10.2014. Further, Govt. of Telangana has requested Ministry of coal (MoC), Govt. of India vide letter dated 04.10.2014 to allot 8 MTPA coal for Telangana STPP Phase-I (2x800 MW) starting from 01.04.2018 and 12 MTPA for Telangana STPP Phase-II (3x800 MW) effective from 01.04.2019. Considering the limitation in coal availability from SCCL, coal may be received either from SCCL or other sources i.e. MCL & SECL through Indian railways. The primary fuel for the main steam generator shall be coal. The domestic coal quality parameters are indicated in Annexure-IV-2 and imported coal parameters are indicated in Annexure-IV-4.
3.03.02	Coal Transportation Coal is envisaged to be transported to site through Indian Railway System.
3.03.03	Fuel Oil The fuel oils to be used for start-up, coal flame stabilization and low load operation of the steam generator shall be Light Diesel oil (LDO) having the characteristics given at Annexure-IV-1 and HSD Oil characteristics given at Annexure-IV-3.
4.00.00	CAPACITY Telangana STPP, Phase-I : 2x800 MW - Present proposal

Telangana STPP, Phase-II : 3x800 MW - Future

5.00.00 MODE OF OPERATION

Base Load

6.00.00 BENEFICIARY STATES

It is proposed that 100% power will be allocated to Telangana State subject to approval by Ministry of Power.

7.00.00 METEOROLOGICAL DATA

The meteorological data from nearest observatory (Ramagundam) is placed at **Annexure-II.**

8.00.00 Plant Water Scheme

The Plant water scheme is included in Part-E of Technical Specification.

8.01.00 **Condenser Cooling (CW) Water System**

It is proposed to provide re-circulating type CW system with cooling towers. For the re-circulating type CW system it is proposed to supply clarified water as make up. Clarified water shall be pumped to the cold water channel of CW system. CW system shall be operated at a design minimum cycle of concentration (C.O.C) of about 5. Chemical treatment programme (using acid dosing and scale cum corrosion inhibitors dosing) may be employed in addition to blow down of CW water to control the CW system chemistry. The expected circulating water analysis is given in this sub-section. CW blowdown shall be drawn from the discharge of CW pumps and the same shall be led to fire water tank, ash water tank, CHP and dust suppression system. For carrying circulating water from CW pump house to TG-area and from TG area to cooling tower, steel lined concrete encased duct would be provided. For interconnecting CW duct with CW pump, condenser and cooling towers, steel pipes would be used. Cooled water from cooling tower will be led to CW pump house through the cold water channel by gravity.

8.02.00 **Equipment Cooling Water (ECW) System (Unit Auxiliaries)**

The plant auxiliaries of Steam Generator and Turbine Generator shall be cooled by Demineralized (DM) water in a closed circuit. The primary circuit DM water shall be cooled through plate type heat exchangers by Circulating Water tapped from CW system in a secondary circuit. The station auxiliaries such as Air compressors, Compressors of ash handling plant, compressor of mill reject system etc. shall also be cooled by Demineralized (DM) water in a closed circuit .The hot secondary circuit cooling water shall be cooled in the cooling towers and shall be returned back to the system. It is proposed to provide independent primary cooling water circuit for Steam Generator & auxiliaries and TG & its auxiliaries.

CLAUSE NO.	PROJECT INFORMATION

8.03.00 **Ash Water System**

(a) It is proposed to operate ash water system in a closed circuit. The ash water from the ash dyke shall be re-circulated. During re-circulation mode, the make up to the ash water system (to compensate for the ash water blow down and evaporation loss in ash dyke) shall be supplied from CW blow down.

(b) During initial stage when decanted ash water is not available, the ash water system shall be operated in once through mode and make up water to ash water system shall be given from CW blow down as well as raw water system.

8.04.00 **Other Miscellaneous Water Systems**

(a) CW system blow down water shall be used for meeting the Fly ash and bottom ash system requirement etc.

(b) The service water shall be taken from clarified water tank of Pretreatment plant. Service water (plant effluent) collected from various areas shall be treated using oil skimmer, tube settlers, coal settling pits etc. as per requirement and treated water from effluent treatment plant shall be recycled back to the service water system for re-use.

(b) The drinking water requirement of the plant shall be provided from water treatment plant.

(c) Steam Cycle make-up water, makeup to the primary circuit of ECW (unit auxiliaries) system, boiler fill water shall be provided from demineralising plant.

(d) The quality of Cooling Water & DM Water is enclosed with this sub-section as **Annexure-III**.

(e) Effluent from various areas in TG & SG system shall be collected in respective pits in their areas and pumped to a common terminal point as shown in plant water scheme.

Pits in respective areas along with pumps (2x100%) in each pit along with drives, piping, valves, fittings etc. shall be in bidder's scope.

9.00.00 **Criteria for Earthquake Resistant Design of Structures and Equipment**

All power plant structures and equipment, including plant auxiliary structures and equipment shall be designed for seismic forces as given in Part-B of this section**.**

10.00.00 **Criteria for Wind Resistant Design of Structures and Equipment**

All structures and equipment of the power plant, including plant auxiliary structures and equipment, shall be designed for wind forces as given as given in Part-B of this section.

CLAUSE NO.	PROJECT INFORMATION

11.00.00

PARAMETERS FOR DESIGN / SIZING / GUARANTEES / OPERATING CAPABILITIES

Tentative parameters to be used for design, sizing, guarantees and operating capabilities of Steam Generator(s) and other equipments /systems/auxiliaries etc. are given at Annexure-V-1 and Annexure-V-2 of this Sub-Section. These parameters are tentative and are for tender purpose only. Final parameters shall be intimated to the successful Bidder after finalization of Turbine Generator Island Package and hence the bidder shall keep provision for minor variation in these parameters. Annexure-V-1 gives Steam and feed water parameters under "Boiler Maximum Continuous Rating" (BMCR) conditions. Annexure-V-2 provides steam and feed water parameters under guarantee conditions i.e Valve Wide Open (VWO) 105% Turbine Maximum Continuous Rating (TMCR) & 100% TMCR load and pure sliding pressure operation of the unit at 100% TMCR, 80%TMCR, 60%TMCR & 50%TMCR. Further, Annexure-V-2 also gives Steam and feed water parameters at 800 MW load condition with both stream of HPHs out of service. All stipulated design and operating capabilities of steam generators and other equipments/systems/auxiliaries under SG Package shall be achievable under pure sliding pressure operation of the unit, without violating any design/sizing/selection stipulation or exceeding any design/safety limits. All quoted guarantees etc. shall be with reference to parameters indicated for VWO (105%TMCR) and 100% TMCR conditions in this Table.

12.00.00

Capability of boiler while firing upto 30% imported coal blend

Steam Generator and its auxiliaries shall also be capable of obtaining maximum continuous rating as specified when firing upto 30% imported coal blended with Indian coal as specified in Annexure-V-1. Typical imported coal parameters are enclosed as Annexure-IV-4 for information of bidder. System redundancies/ margins on equipment/ auxiliary sizing need not be available under such fuel firing condition unless specifically mentioned otherwise. However, equipments/ systems shall not exceed their safety limits under such firing, and shall not transgress in to factors of safety as per specification/ codes.

CLAUSE NO.	PROJECT INFORMATION	

ANNEXURE-I

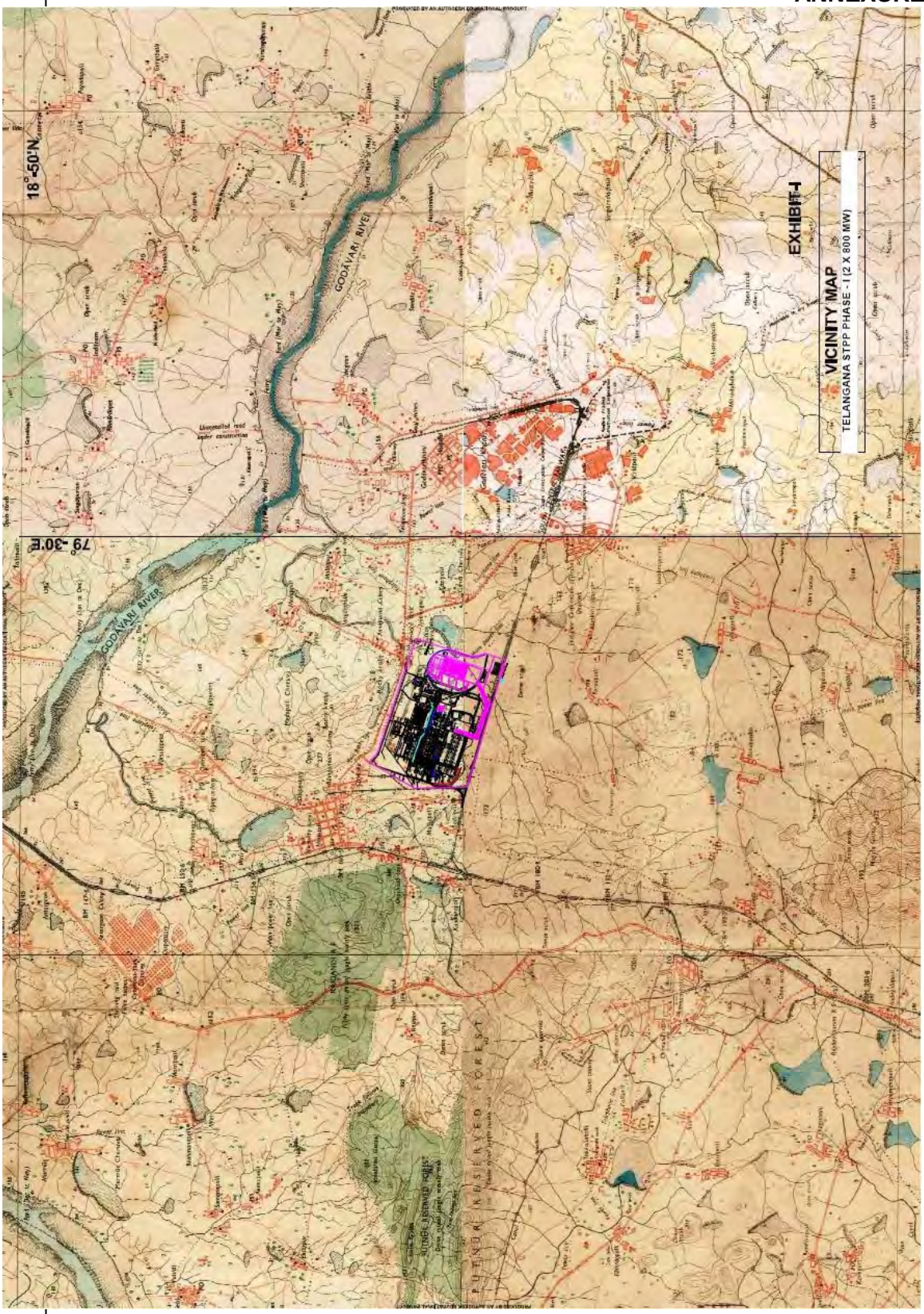

जलवायवी सारणी
CLIMATOLOGICAL TABLE

स्टेशन : रामगुंडम
STATION :Ramgundam

अक्षांश LAT 18°46′ N देशांतर LONG 79°26′ E समुद्री तल माध्य से ऊँचाई HEIGHT ABOVE M. S. L. मीटर 156 METRES

1951 से 1980 तक के प्रेक्षणों पर आधारित
BASED ON OBSERVATIONS FROM 1951 TO 1980

माह / MONTH		स्टेशन का सतह दाब / STATION LEVEL PRESSURE (एच. पी. ए. / hPa)	वायु तापमान / AIR TEMPERATURE — माध्य / MEAN: शुष्क बल्ब / DRY BULB (डि.सें. / °C)	नम बल्ब / WET BULB (डि.सें. / °C)	दैनिक अधिकतम / DAILY MAX (डि.सें. / °C)	दैनिक न्यूनतम / DAILY MIN (डि.सें. / °C)	माह में उच्चतम / HIGHEST IN THE MONTH (डि.सें. / °C)	माह में निम्नतम / LOWEST IN THE MONTH (डि.सें. / °C)	चरम / EXTREMES: उच्चतम / HIGHEST (डि.सें. / °C)	दिनांक और वर्ष / DATE AND YEAR	निम्नतम / LOWEST (डि.सें. / °C)	दिनांक और वर्ष / DATE AND YEAR	आर्द्रता / HUMIDITY: सापेक्ष आर्द्रता / RELATIVE HUMIDITY (प्रतिशत / %)	वाष्प दाब / VAPOUR PRESSURE (एच.पी.ए. / hPa)	मेघ की मात्रा / CLOUD AMOUNT (आकाश के अष्टमांश / Oktas of sky): समस्त मेघ / ALL CLOUDS	निम्न मेघ / LOW CLOUDS	वर्षा / RAINFALL: मासिक योग / MONTHLY TOTAL (मि.मि. / mm)	वर्षा के दिनों की संख्या / NO. OF RAINY DAYS	वर्षसहित सबसे नम महीने का योग / TOTAL IN WETTEST MONTH WITH YEAR (मि.मि. / mm)	वर्षसहित शुष्कतम महीने का योग / TOTAL IN DRIEST MONTH WITH YEAR (मि.मि. / mm)	24 घंटोंकी सबसे भारी वर्षा / HEAVIEST FALL IN 24 HOURS (मि.मि. / mm)	दिनांक और वर्ष / DATE AND YEAR	माध्य पवन गति / MEAN WIND SPEED (कि.मी. प्र. घं. / Kmph)
जनवरी / JAN	I	998.1	20.0	16.4	30.8	15.8	33.3	10.9	35.3	28 1974	8.4	10 1972	68	15.9	1.7	0.8	7.8	0.5	53.0 1966	0.0	47.6	20 1979	4.5
	II	994.1	28.8	19.2									37	14.5	1.6	0.7							
फरवरी / FEB	I	996.2	23.0	18.0	33.9	18.8	37.1	13.8	39.4	29 1980	9.4	08 1949	60	16.8	1.7	0.9	5.1	0.6	32.4 1975	0.0	24.0	21 1968	5.3
	II	991.9	32.3	20.3									30	14.1	1.6	0.8							
मार्च / MAR	I	994.4	26.8	20.2	37.5	22.3	40.6	17.4	42.8	27 1953	13.0	11 1979	53	18.3	1.7	0.8	12.0	1.0	71.6 1951	0.0	39.2	05 1970	6.4
	II	989.5	35.9	21.6									25	14.1	1.8	1.0							
अप्रैल / APR	I	991.6	30.2	23.1	40.3	26.2	43.6	21.5	45.6	29 1973	15.4	20 1971	53	22.5	2.3	0.7	15.7	1.1	68.6 1962	0.0	62.0	24 1961	7.9
	II	986.3	38.6	23.5									25	16.6	3.2	1.7							
मई / MAY	I	987.6	32.9	23.9	42.4	29.0	45.6	23.8	47.2	19 1948	20.4	01 1977	46	22.3	2.6	0.9	28.4	2.0	142.2 1977	0.0	111.2	01 1977	7.9
	II	982.6	40.4	24.6									25	17.9	3.6	2.1							
जून / JUN	I	985.4	30.0	24.3	37.8	27.1	43.8	22.4	47.2	08 1953	19.4	03 1973	63	25.7	5.3	2.3	171.3	8.4	366.8 1956	0.0	140.7	20 1953	8.4
	II	981.2	35.5	25.4									45	24.1	5.7	3.5							
जुलाई / JUL	I	985.4	27.0	24.2	32.5	24.5	36.8	22.0	41.0	06 1966	18.8	14 1973	79	28.0	6.6	3.6	309.2	15.2	599.6 1976	104.3 1970	130.7	23 1977	7.0
	II	982.2	30.7	25.4									65	28.0	6.6	3.9							
अगस्त / AUG	I	986.4	26.4	24.1	31.6	24.2	35.0	22.2	37.4	28 1960	19.8	31 1965	82	28.1	6.4	3.6	243.8	13.8	487.4 1953	59.6 1968	104.4	21 1980	5.8
	II	983.3	29.8	25.2									68	28.2	6.5	3.9							
सितम्बर / SEP	I	989.0	26.9	24.3	32.5	24.1	35.7	21.8	38.0	02 1968	17.8	30 1972	80	28.4	5.1	2.3	190.7	9.2	404.8 1966	65.8 1971	128.0	20 1969	4.8
	II	985.5	30.2	25.1									66	27.7	5.7	3.2							
अक्तूबर / OCT	I	993.1	26.1	22.8	33.1	22.3	35.9	18.1	38.4	11 1957	15.4	14 1972	75	25.2	3.1	1.2	94.5	4.4	539.6 1973	0.0	135.8	24 1973	3.9
	II	989.5	30.4	23.4									55	23.2	3.9	2.1							
नवम्बर / NOV	I	996.7	22.8	19.0	31.2	18.1	33.9	13.8	36.6	06 1977	9.0	30 1970	69	19.1	2.2	0.7	18.8	1.2	118.0 1962	0.0	70.2	05 1961	3.5
	II	993.3	28.4	20.5									46	17.7	2.6	0.9							
दिसम्बर / DEC	I	998.5	19.7	16.3	29.9	14.9	32.6	11.0	34.5	26 1976	7.8	10 1970	69	16.0	1.7	0.5	9.7	0.6	109.4 1962	0.0	101.2	02 1966	3.2
	II	994.8	27.3	18.8									41	14.9	2.0	0.4							
वार्षिक योग या माध्य / ANNUAL TOTAL OR MEAN	I	991.9	26.0	21.4	34.5	22.3	45.7	9.9	47.2		7.8		66	22.2	3.4	1.5	1107.0	58.0	1672.8 1973	565.2 1952	140.7		5.7
	II	987.9	32.4	22.8									44	20.1	3.7	2.0							
वर्षोंकी सं / NUMBER OF YEARS	I	30	30	30	30	30	30	30	33		33		30	30	30	24	30	30	33	33	33		24
	II	30	30	30									30	30	30	24							

637

ANNEXURE-III

COOLING WATER ANALYSIS

S.No	Constituent	As	mg/l
1	Calcium	$CaCO_3$	104
2	Magnesium	$CaCO_3$	88
3	Sodium	$CaCO_3$	59
4	Potassium	$CaCO_3$	4
	Total cations	$CaCO_3$	255
5	HCO3	$CaCO_3$	155
6	P- Alkalinity	$CaCO_3$	0
7	Chloride	$CaCO_3$	54
8	Sulphate	$CaCO_3$	46
	Total Anions	$CaCO_3$	255
9	Silica, Reactive	Si	5
10	Iron (Total)	Fe	0.5
11	pH	-	7.0-7.8
12	Turbidity	NTU	10
13	Total dissolved solids		250-300
14	Temperature	Deg C	20-35

ANNEXURE-III

ANALYSIS OF DM WATER TO BE USED FOR MAKE-UP WATER TO CONDENSER

Sl.No.	Characteristics	Value
1.	Silica (Max.)	0.02 ppm as Sio2
2.	Iron as Fe	Nil
3.	Total hardness	Nil
4.	pH value	6.8 -7.2
5.	Conductivity	Not more than 0.1micro mho/cm excluding the effects of free CO2

ANNEXURE-IV-1

TABLE-1

LIGHT DIESEL OIL CHARACTERISTICS

AS PER IS 15770-2008

	Characteristics	**LDO**
1.	Pour Point (max)	21 °C & 12°C for Summer and Winter respectively
2.	Kinematic viscosity in centistokes at 40 deg.C	2.5 to 15.0
3.	Sediment percent by mass (max)	0.10
4.	Total sulphur percent by mass (max)	1.5
5.	Ash percentage by mass (max)	0.02
6.	Carbon residue (Rams bottom) percent by pass (max.)	1.50
7.	Acidity inorganic	Nil
8.	Flash point (Min.) - Pensky Martens	66 deg.C
9.	Copper strip corrosion for 3 hours at 100°C	Not worse than No. 2
10.	Water content, % by volume (max)	0.25
11.	GCV(kcal/kg)	10,000

ANNEXURE-IV-2

TABLE-1 – A

DOMESTIC COAL CHARACTERISTICS

S No.	Characteristics (As received basis)	Range of 95% coal supplies			Range of 5% coal supplies	
		Column -1	Column-2	Column-3	Range of Adequacy coal	
1.0	**PROXIMATE ANALYSIS**	**Design**	**Worst**	**Best**	**Worst**	**Best**
1.1	Total Moisture (%)	14	17	11.5	17.5	10
1.2	Ash (%)	40	44	34	44.5	32
1.3	Volatile matter (%)	22	19	24	18.75	25
1.4	Fixed carbon (%)	24	20	30.5	19.25	33
2.0	**ULTIMATE ANALYSIS**					
2.1	Carbon (%)	34	30	41.65	28.85	44.41
2.2	Hydrogen (%)	3.1	2.3	3.4	2.3	3.5
2.3	Sulphur (%)	0.4	0.6	0.35	0.6	0.35
2.4	Nitrogen (%)	1.2	0.9	1.23	0.84	0.57
2.5	Oxygen (%) (By difference)	7.3	5.2	7.87	5.41	9.17
2.6	Total Moisture (%)	14	17	11.5	17.5	10
2.7	Ash (%)	40	44	34	44.5	32
2.8	GCV (kcal/kg)	3500	3000	4200	2900	4400
2.9	Hard grove index	50	45	70	45	70
2.10	YGP Index (mg/kg)	75	80	70	85	65
3.0	**ASH ANALYSIS**					
3.1	Silica (%)	58.59	56.81	60.2	56.29	60.42
3.2	Alumina (%)	26.77	27.42	26.1	27.5	25.9
3.3	Iron Oxide (%)	8.8	9.8	7.8	10.1	7.6
3.4	Titania (%)	1.66	1.78	1.56	1.86	1.52
3.5	Phosphoric Anhydride (%)	0.19	0.1	0.24	0.08	0.32
3.6	Lime (%)	1.39	1.48	1.32	1.52	1.28
3.7	Magnesia (%)	1	1.13	0.97	1.17	0.92
3.8	Sulphuric Anhydride (%)	0.05	0.04	0.1	0.04	0.15
3.9	Sodium Oxide (%)	0.2	0.08	0.4	0.08	0.5
3.10	Balance Alkalies (By Difference) (%)	1.35	1.36	1.31	1.36	1.39
4.0	**ASH FUSION RANGE** (Under reducing atmosphere)					
4.1	Initial Deformation Temperature (degree Celsius)	1150	1100	1200	1100	1200
4.2	Hemispherical temperature (degree Celsius)	1300	1250	1350	1250	1350
4.3	Flow temperature (degree Celsius)	1400	1350	1400	1350	1400

TABLE-2 **ANNEXURE-IV-3**

HIGH SPEED DIESEL OIL CHARACTERISTICS

[AS PER IS **1460-2005 (BS-II)]**

S. No.	Particulars	Unit	Value
1.	PHYSICAL PROPERTIES		
	a. Distillation volume recovery @ 350^{0}C	% vol. (min)	85
	b. Distillation volume recovery @ 370^{0}C	% vol. (min)	95
	c. Kinematic Viscosity @ 40 Degree C	cSt	2.0 – 5.0
	d. Density @ 15 Degree C	kg/m^3	820 – 860
	e. Pour Point		
	- Summer	Degree C (max)	15
	- Winter	Degree C (max)	03
	f. Cold Filter Plugging Point		
	- Summer	Degree C (max)	18
	- Winter	Degree C (max)	06
	g. Flash Point (Abal)	Degree C (max)	35
	h. Lubricity WSD 1.4 @ 60 Degree C	Microns (max)	460
2.	HEATING VALUE		
	a. Higher Heating Value (HHV)	Kcal/Kg	11,000
	b. Lower Heating Value (LHV)	Kcal/Kg	10,300
3.	ACIDITY		
	a. Inorganic	mg KOH/g	Nil
	b. Total	mg KOH/g	0.2 (max.)
4.	Copper Strip Corrosion 3 hours @100^{0}C	No.	1 (max)
5.	RCR on 10% residue	% wt.	0.3 (max)
6.	CONTAMINANTS		
	a. Ash	ppm (wt.)	100 (max)
	b. Sediments	% wt	0.05 (max)
	c. Total Sulphur	% wt	0.05 (max)
	d. Water Content	% volume	0.05 (max)
	e. Trace Metals		
	- Na + K	ppm (wt)	0.30 (max)
	- Vanadium	ppm (wt)	0.50 (max)
	- Lead	ppm (wt)	0.50 (max)
	- Calcium	ppm (wt)	2.0
	- Ni + Zn	ppm (wt)	Nil
7.	Nitrogen content (FBN)	% wt.	0.015

ANNEXURE-IV-4

TABLE – 4

TYPICAL IMPORTED COAL AND ASH CHARACTERISTICS

Sl.No.	Characteristics (as received basis)	Imported Coal	
		Worst	Best
1.0	**Proximate Analysis**		
1.1	Total Moisture (%)	20	16
1.2	Ash (%)	10	10
1.3	Volatile Matter (%)	30	45
1.4	Fixed Carbon (%)	40	29
1.5	Total (%)	100	100
2.0	**Ultimate Analysis**		
2.1	Carbon (%)	56.4	62.4
2.2	Hydrogen (%)	4.5	4.9
2.3	Sulphur (%)	0.9	0.8
2.4	Nitrogen (%)	0.9	0.5
2.5	Oxygen (%) (By difference)	7.3	5.4
2.6	Carbonates (%)	0	0
2.7	Phosphorous (%)	0	0
2.8	Total Moisture (%)	20	16
2.9	Ash (%)	10	10
	Total	100	100
2.10	GCV (Kcal/Kg)	5800	6500
2.11	Hard Grove Index	45	60
2.12	YGP (mg/kg)	100	70
3.0	**Ash Analysis**		
3.1	Silica (SiO_2) (%)	32.74	34.94
3.2	Alumina(Al_2O_3) (%)	30.5	28.43
3.3	Iron Oxides(Fe_2O_3) (%)	18.2	15.2
3.4	Titania (TiO_2)	1.56	1.76
3.5	Phosphoric Anhydride(P_2O_5) (%)	0.44	0.54
3.6	Lime (CaO) (%)	6.12	7.62
3.7	Magnesia (MgO) (%)	1.83	1.93
3.8	Sulphuric Anhydride (%)	6.95	7.65
3.9	Sodium Oxide (Na_2O) (%)	0.3	0.4
3.10	Balance alkalies (by difference)	1.36	1.56
	Total	100	100
4.0	**Ash Fusion Temperature reducing temperature**		
4.1	Initial deformation Temp (ºC)	1100	1250
4.2	Hemispherical Temp. (ºC)	1300	1350
4.3	Flow Temp. (ºC)	1400	1400

Annexure – V-1

Salient data for design and sizing of equipment at BMCR Condition

Sl. No.	Description	BMCR condition, 3% MU, 77 mmHg
1	Steam flow at Superheater Outlet (T/hr)	2580
2	Pressure at SH outlet (kg/cm^2-abs)	281
3	Pressure at Turbine inlet (kg/cm^2-abs)	270
4	Temperature at Superheater outlet (° C)	603
5	Steam flow to Reheater (T/hr)	1995
6	Steam Pressure at HP Turbine Exhaust (Kg/cm^2-abs)	68.3
7	Steam temperature at HP Turbine exhaust (°C)	378
8	Steam Temperature at Reheater Outlet (°C)	603
9	Pressure drop through the Reheater including cold and hot Reheat piping (kg/cm^2)	10% of HPT Exhaust Pressure
10	Feed Water Temperature at Economizer inlet (°C)	307.6

Note : The parameters given here are tentative and will be finalized after receiving form TG supplier.

Annexure-V-2

Salient data for design and sizing of equipment at Pure Sliding Pressure Condition

Sl.No.	Description	105% TMCR Guarantee condition	100% TMCR condition	800MW (100%) PSP condition	640 MW (80%) PSP condition	480 MW (60%) PSP condition	400 MW (50%) PSP condition	800 MW (Both stream of HPHs out of service)
1	Steam flow at Superheater Outlet (T/hr)	2470.6	2324.5	2320.1	1821.4	1353.1	1127.9	1927.5
2	Pressure at Turbine inlet (kg/cm2-abs)	270	270	262	207	155	130	270
3	Pressure at SH Outlet (kg/cm2-abs)	To be derived by the bidder based on the SH outlet Pressure of 281 kg/cm2 (abs) at BMCR condition						
4	Temperature at Superheater outlet (°C)	603	603	603	603	603	603	603
5	Steam flow to Reheater (T/hr)	1998	1889	1885	1509.2	1146.4	967.4	1923.6
6	Steam Pressure at HP Turbine exhaust (Kg/cm2-abs)	68.7	65	64.9	52.3	40	33.8	68.8
7	Steam temperature at HP Turbine exhaust (°C)	378.5	373.5	375.5	381.2	387.5	390.9	391.2
8	Steam Temperature at Reheater Outlet (°C)	603	603	603	603	603	603	603
9	Pressure drop through the Reheater including Cold and Hot Reheater piping (kg/cm2)	10% of HPT Exhaust Pressure for BMCR condition and correspondingly lower for different conditions						
10	Feed Water Temperature at Economizer inlet (°C)	308.4	305	305.2	292.9	277	266.9	187.6

Notes :

(1) The parameters given here are tentative and will be finalized after receiving form TG supplier.
(2) The above parameters are at 0% Make-up with average condenser back pressure of 77 mm of Hg.
(3) The Final Feed Water Temperature during All HP heater out can go down till 176°C.

SECTION - I

SPECIFIC TECHNICAL REQUIREMENTS

SECTION I-A: SPECIFIC TECHNICAL REQUIREMENTS (MECHANICAL)

SECTION I-B: SPECIFIC TECHNICAL REQUIREMENTS (ELECTRICAL)

SECTION I-C: SPECIFIC TECHNICAL REQUIREMENTS (C&I)

SECTION - IA

SPECIFIC TECHNICAL REQUIREMENTS - MECHANICAL

1. SCOPE:

Design (i.e. preparation and submission of drawing /documents including "As Built" drawings and O&M manuals), engineering, manufacture, fabrication, assembly, inspection/ testing at vendor's & sub-vendor's works, painting, maintenance tools & tackles (as applicable), fill of lubricants & consumables (excluding chemicals), mandatory spares along with spares for erection, start-up and commissioning as required, forwarding, proper packing, shipment and delivery at site for TELANGANA SUPER THERMAL POWER PROJECT PHASE-I (2 X 800 MW) SG PKG. Chemical Dosing System, complete with all accessories for the total scope as specified hereinafter for the following systems:-

a) HYDRAZINE DOSING SYSTEM - 2 Nos. Skids.
b) AMMONIA DOSING SYSTEM - 2 Nos. Skids.
c) NaOH DOSING SYSTEM - 2 Nos. Skids.

2. DESIGN BASIS:

Customer specification.

The following drawings/ data sheets are enclosed for the reference:

a) P&ID for Hydrazine dosing system.
b) P&ID for Ammonia dosing system.
c) P&ID for NaOH dosing system.
d) DATA SHEET – A for all above systems.

3. SCOPE OF SERVICE

The bidder's scope also includes following services for scope under this specification:

a. Design and engineering.
b. Fabrication of the skid mounted chemical dosing system.
c. Inspection and testing of the skid as per the approved quality assurance plan.
d. Supply of the skid mounted chemical dosing system up to the power plant site along with all accessories as defined in the technical specification.
e. Painting as per approved painting requirement to be finalized during detailed engineering. However the same shall be prepared in line with the painting requirement enclosed in ANNEXURE IV of technical specification.

4. DESIGN PHILOSOPHY

Chemical dosing systems are designed to dose required quantity of chemicals to maintain the quality of boiler feed water. Chemicals are dosed both in low pressure side of feed water cycle as well as in ECW system.

5. LOW PRESSURE CHEMICAL DOSING

The LP dosing consists of Hydrazine dosing system, ammonia dosing system for boiler feed water and NaOH dosing skids for ECW system. The details of each dosing system are given below:

4.1 HYDRAZINE DOSING SYSTEM: (TOTAL NO. OF SKIDS= 2 NOS.)

(Refer Drawing no. PE-DG-424-154-A001)

One number of Hydrazine Dosing System consists of the following:

a) One number Hydrazine Measuring Tank.
b) One number Hydrazine Mixing cum storage tank.
c) Two (2 X 100%) Hydrazine Dosing Pumps.
d) One number Hand Pump with flexible hose.
e) Associated Piping, valves, fitting as indicated in the P&ID of hydrazine dosing system and data sheet-A enclosed and as required to make the system complete.

f) Control & instrumentation as per P&ID of Hydrazine Dosing System, Data sheet-A, Section IIA, IC and IIC.

4.2 AMMONIA DOSING SYSTEM: (TOTAL NO. OF SKIDS= 2 NOS.)
(Refer Drawing no. PE-DG-424-154-A002)

One number of Ammonia Dosing System consists of the following:

a) One number Ammonia Measuring Tank.
b) One number Ammonia Mixing cum storage tank.
c) Two (2 X 100%) Ammonia Dosing Pumps.
d) One Hand Pump with flexible hose.
e) Associated Piping, valves, fitting as indicated in the P&ID of Ammonia Dosing System and data sheet-A enclosed and as required to make the system complete.
f) Control & instrumentation as per P&ID of Ammonia Dosing System, Data Sheet-A, Section IIA, IC and IIC.

4.3 NAOH DOSING SYSTEM FOR ECW SYSTEM: (TOTAL NO. OF SKID = 2 NOS)
(Refer Drawing. No. PE-DG-424-154-A003)

One number of NaOH Dosing System consists of the following:

a) One number NaOH Mixing cum storage tank.
b) Two (2 X 100%) NaOH Dosing Pumps.
c) Associated Piping, valves, fitting as indicated in the P&ID of NaOH dosing system and data sheet-A enclosed and as required to make the system complete.
d) Control & instrumentation as per P&ID of NaOH Dosing System, Data Sheet-A, Section IIA, IC and IIC.

6. CIVIL SCOPE
Nil.

7. TERMINAL POINTS (also refer P&I Diagrams enclosed)

a) All piping beyond battery limit of skid as indicated in P&ID's enclosed with the technical specification is excluded from bidder's scope.
b) Electrical scope shall be as per Std. Electrical Scope Matrix attached in Section IB of the technical specification.
c) All drains shall be brought at one point on the skid by the bidder via a drain header and further connection to the nearest plant drain shall be done by BHEL/ Customer.
d) Counter flanges for all the piping terminal points (as per P&IDs) and for the terminal point of drain header shall be in bidder's scope.

8. QP AND SUB VENDOR APPROVAL

7.1 The quality assurance plan is enclosed elsewhere in technical specification. However requirement of detailed QP, inspection checklist, certificate of conformance etc. for each equipment and sub-vendor shall be finalized during detailed engineering stage; decision of BHEL/ customer shall be binding on vendor in this regard. Any changes/ additional tests insisted upon by Owner during approval of QAP's shall be accepted by bidder without any commercial and delivery implication to BHEL/ Customer. Bidder shall submit the quality plans in BHEL format during detailed engineering stage. Bidder to note further that during detailed engineering all the QAP's/ check lists etc. shall be submitted to Customer/ BHEL for approval. All inspection & testing etc. shall be carried out accordingly.

7.2 The sub vendor list (Annexure- II) enclosed is indicative only and is subject to approval/ acceptance by customer. Bidder to propose his sub vendor list with back up documents (experience list, end user performance certificate as applicable) etc. The same shall subject to BHEL and Customer

approval during detailed engineering stage without any commercial & delivery implication to BHEL/ Customer.

9. DOCUMENTS TO BE SUBMITTED BY BIDDER ALONG WITH THE BID

BIDDER SHOULD SUBMIT THE SIGNED AND STAMPED COPY OF THE FOLLOWING DOCUMENTS:

- Deviation, if any in the enclosed Schedule of deviation with cost of withdrawal only with mention of specification clause for which deviation is being asked. (Stamped & Signed).
- Compliance certificate (stamped & signed).
- Un-priced Schedule duly filled in (stamped & signed).
- List of Recommended spares, if any (stamped & signed).

Bidder to note that if bidder has taken any deviation from the technical specification requirements, the same shall be clearly mentioned in the bid in the BHEL prescribed format of Schedule of Deviations attached as Section - III of this technical specification.

In case of no deviation, Bidder to furnish signed and stamped copy of "Schedule of Deviations with cost of withdrawal" stating **"No Deviation**". No other technical document is required along with bidder's offer. Any other document submitted by bidder shall not be evaluated by BHEL and shall be considered as withdrawn. Bidder to note that any un-declared deviation mentioned in bidder offer other than specified in the scheduled of Deviations shall be considered as null and void.

10. DRAWING/ DOCUMENTS REQUIREMENT

For the drawings/ documents submission schedule, please refer ANNEXURE-III.

For the drawings/ documents submission procedure, please refer ANNEXURE-VII. The bidder has to submit the revised drawing/ document along with the compliance sheet indicating enumerate reply to all BHEL and customer comments or observations. Without compliance sheet the submission of the drawings/ documents will not be considered and the delay on this account will be solely on bidder's side only. Bidder to comply with the observations of the BHEL and CUSTOMER without price & delivery implication.

11. SPARES

a) All the spares for the equipment under the contract provided by the vendor will strictly conform to the specifications and documents and will be identical to the corresponding main equipment/ components supplied under the contract.
b) The quality plan and the inspection requirement finalized for the main equipment will also be applicable to the corresponding spares.

12. MANDATORY SPARES

a) The list of mandatory spares considered essential by the BHEL & Customer is indicated in Annexure- V.
b) All mandatory spares shall be delivered at site at least two months before scheduled date of initial operation of the first unit. However, spares shall not be dispatched before dispatch of corresponding main equipment.
c) Wherever quantity has been specified as percentage (%), it shall mean percentage (%) of the total population of the item in the station (project), **unless specified otherwise** and the fraction will be rounded off to the next higher whole number.
d) Wherever quantity is specified both as a percentage and a value, the Bidder has to supply the higher quantity until & unless specified otherwise.
e) The spares shall be treated and packed for a long storage under the climatic condition prevailing at site.
f) Each spare part shall be clearly marked and labelled on the outside of the packing with its

description. When more than one spare part is packed in a single case, a general description of the content shall be shown on the outside of such case and a detailed list enclosed. All cases, containers, and other packages must be suitably marked and numbered for the purpose of identification.

g) The Bidder shall note that if there in any change/ variation in equipment/ system during detail engineering which causes any change/ variation in the essential spares quantity, the same shall be supplied without any commercial implications. The price indicated for the mandatory spares shall be considered for the purpose of evaluation.

13. START-UP AND COMMISSIONING SPARES

Start-up and Commissioning spares are those which would be required during equipment or system testing, start up and commissioning. All spares used until the plant is finally handed over by the bidder to the Customer come under this category. All start-up and commissioning spares as required shall be provided by the bidder without any additional cost to the BHEL and Customer. The list of minimum start-up and commissioning spares are attached in Annexure-VI. However bidder to provide additional spares as per their system requirement without any commercial and delivery implication to BHEL/ customer during detailed engineering List of spares shall be furnished by BIDDER along with the offer.

Bidder shall be responsible for the ready and timely availability for all the start-up and commissioning spares as required during various stages of testing, cleaning and commissioning up to handing over of each unit of the total plant.

An adequate stock of start-up spares shall be available at the site such that the start-up and commissioning of the equipment/systems, Performance guarantee test and handing over the equipment/ systems to the Customer will be carried out without hindrance and delay. All start-up spares which remain unused after the taking over of the plant shall remain the property of the Customer.

14. SPECIAL TOOLS AND TACKLES

a) One set of all special tools shall be furnished and shipped with each piece of equipment for dismantling, maintenance, adjustment, and calibration of the equipment. The tools shall be shipped in separate heavily constructed wooden boxes provided with hinged covers and padlock hasps.
b) The Contractor shall supply under this contract all maintenance tools for each piece of equipment/ system and it shall be boxed separately and the boxes shall be appropriately marked for shipment and identification of contents.
c) A weather-proof itemized list of the contents shall also be attached to the outside of each container.
d) The maintenance tools shall include all special handling rigs, bars, slings, cable and all specialized equipment for control system maintenance such as extender boards, scopes, and all software and hardware. Further, Bidder shall also include a full set of regular maintenance tools and tackles required. Bidder shall also include all maintenance tools and tackles in their scope. Total price of all the maintenance tools and tackles shall be included in the quoted lump sum price.

15. PACKING

To prevent damage to any equipment/ item of the skid during transit, wooden/ angle iron/ steel frame supports to be provided wherever required. Special attention shall be provided while packing and loading for overhead equipment.

THE ACTUATOR OF THE PUMP SHALL BE PACKED IN AIR TIGHT PACKING ALONG WITH THE PUMP IN INSTALLED CONDITION FOR PREVENTING DAMAGE OF ACTUATOR.

Bidder shall submit the packing details during detailed engineering for approval. Any changes required in packing details shall be complied by the bidder without any price and delivery implication.

16. PAINTING

Bidder to note that painting shall be as per approved painting schedule to be finalized during detailed engineering. However the same shall be prepared in line with the schedule enclosed in Section IA/ Annexure-IV.

17. DESIGN REQUIREMENTS

Bidder to note that design requirement of the chemical dosing skids shall be as below: -

a) In addition to the requirements of Section-I & II the following shall also be complied under scope of this specification: The P&ID is enclosed herein in this section for bidder's compliance.
b) The material of construction specified in Data Sheet-A are minimum requirements and material of construction for other components not specified shall be similarly selected by the bidder for intended duty which shall be subjects to Customer/ BHEL approval during detailed engineering.
c) All instrument-wetted parts will be suitable for requested application.
d) All high points on any, tanks, pumps, piping or instrumentation will be vented and provided with valve. All low points on any, tanks, pumps, piping or instruments will be drained and provided with valve.
e) 5 mm (min.) thick IS 2062 Checker plate shall be provided covering the skid frame and for elevated platform for the preparation/ measuring tank, wherever applicable. The tanks supports, pumps and pipe supports and LCP/ LCP supports shall be welded to the checker plate.
f) Stuffing box shall be provided for mounting the agitator to avoid air ingress.
g) Vent/ overflow pipe from tank shall at least reach the bottom half of the breather/ water seal/ CO_2 absorber.
h) SS pad shall be provided for welding MS structural supports to SS tanks.
i) Step ladder and chemical charging platform shall be provided for easy access to top of tank.
j) All the terminal points shall be easily accessible and towards one side of skid.
k) All valves shall be easily accessible for the operator.
l) All tanks/ pumps shall have name plate clearly indicating the equipment name.
m) Pipe fittings of the system shall be done using elbows and tees. Pipe bending is not acceptable.
n) All equipment shall have SS name plate.
o) All LCP shall be mounted in their respective dosing skids only.
p) Energy efficient level IE3 LT Motors shall be provided by the bidder.
q) All the terminal points where flange joints are involved, bidder shall terminate it along with matching counter flange, nuts, bolts, gaskets etc.
r) KKS codes for all drives and instruments for the project have to be followed.
s) All the instruments/ equipment/ electrical items shall be provided & designed with maximum star rating as available in line with energy conservation policies notified by BEE, GOI at the time of supply.

18. ELECTRICAL LOAD DATA

Bidder has to comply with following electrical load data for Chemical Dosing System:-

S. No.	Load title	Max. Cont. Demand (kW)	Working	Standby	Voltage	Feeder
1.	Hydrazine Dosing Pump	0.75	1	1	415 V	Unidirectional
2.	Hydrazine Mixing Tank Stirrer	0.75	1	0	415 V	Unidirectional
3.	Hydrazine Dosing System LCP	1.0	1	0	415 V	Supply
4.	Ammonia Dosing Pump	0.75	1	1	415 V	Unidirectional
5.	Ammonia Mixing Tank Stirrer	0.75	1	0	415 V	Unidirectional
6.	Ammonia Dosing System LCP	1.0	1	0	415 V	Supply
7.	NaOH Dosing Pump	0.37	1	1	415 V	Unidirectional
8.	NaOH Tank Stirrer	0.37	1	0	415 V	Unidirectional
9.	NaOH Dosing System LCP	1.0	1	0	415 V	Supply

19. MISCELLENEOUS REQUIREMENTS

a) Initial charge of all lubricants & grease.
b) All special tools necessary for proper maintenance or adjustment of the equipment packaged in permanent box.
c) Finish paints for touch-up painting of equipment after erection at site in sealed container.
d) All the first fill and one Year's topping requirements or 10 % of first fill quantity, whichever is more of consumable such as greases, oil, lubricants, servo fluids/ control fluids, gases and etc. which will be required to put the equipment covered under the scope of specifications, into successful commissioning / initial operation and to establish completion of facilities shall be furnished by the bidder. Suitable standard lubricants as available in India are desired. Efforts should be made to limit the variety of lubricants to minimum.
e) Document approval by Customer/ BHEL under Approval category or information category shall not absolve the vendor of their contractual obligations of completing the work as per specification requirement. Any deviation from specified requirement shall be reported by the vendor in writing and require written approval.
f) Unless any change in specified requirement has been brought out by the vendor during detail engineering in writing while submitting the document to Customer and BHEL for approval, approved document (with implicit deviation) will not be cited as a reason for not following the specification requirement.
g) In case vendor submits revised drawing after approval of the corresponding drawing, any delay in approval of revised drawing shall be to vendor's account and shall not be used as a reason for extension in contract completion. However, in case changes are necessitated due to any constraints at Customer/BHEL end, delay in review/ approval of drawing beyond one month will be to Customer/BHEL account.
h) Final Electrical Load list will be submitted by the successful bidder as per agreed drawing/ doc submission schedule. Thereafter any change in the electrical load list shall be entertained only subject to its feasibility, and BHEL reserves the right to debit the vendor cost of any changes necessitated in the BHEL's switch gear /MCC on account of changed loads.
i) Wherever CIVIL works is excluded from the bidder's scope, successful bidder shall furnish civil assignment / scope drawings. The corresponding CIVIL drawing prepared by BHEL / CIVIL agency, based on civil assignment drawing of bidder will be furnished to the successful bidder for concurrence. In case any modification is required in the civil work already carried out based on final civil inputs given by vendor, BHEL reserves the right to debit cost of such rework to vendor".
j) Bidder to submit BBU during detailed engineering after approval of Basic documents. BBU shall be equal to BOQ for the package and there shall be no price and delivery implication is applicable to BHEL / CUSTOMER for the same. None of the items supplied for the project as non-billable. Incomplete BBU shall not be reviewed by BHEL.
k) Training of plant Owner's personnel, O&M operators' personnel on plant operation and maintenance.
l) Relevant requirements as per GTR, GCC, ECC & SCC. Any statutory requirement / clearance required for the packages from government / local body shall be in bidder's scope.
m) In case of any conflict and repetition of clauses in the specification, the more stringent requirements among them are to be complied with.
n) Vendor to attend regular engineering meeting with BHEL and Customer fortnightly in BHEL or Customer office as decided during detail engineering. Vendor will depute his entire concerned engineering representatives along with the project manager for discussion and approval. Meeting can be held at site also.
o) Latest version of all codes and standards to be followed.
p) For detailed dispatch instructions, Bidder to refer special condition of contract (SCC) of the project.

ANNEXURES

- **ANNEXURE I: QUALITY PLAN**
- **ANNEXURE II: SUB VENDORS LIST**
- **ANNEXURE III: DRAWING DOCUMENTS DISTRIBUTION PROCEDURE**
- **ANNEXURE IV: PAINTING SPECIFICATION**
- **ANNEXURE V: MANDATORY SPARES LIST**
- **ANNEXURE VI: LIST OF ERECTION & COMMISSIONING SPARES**
- **ANNEXURE VII: DRAWING/ DOCUMENTS SUBMISSION SCHEDULE**
- **ANNEXURE VIII: FORMAT FOR OPERATION AND MAINTENANCE MANUAL**

ANNEXURE I: QUALITY PLAN

MANUFACTURER'S NAME & ADDRESS :	QUALITY PLAN		PROJECT: TELANGANA SUPER THERMAL POWER PROJECT PHASE I (2 X 800 MW) SG PKG.
	ITEM: CHEMICAL DOSING SYSTEM	QP.NO :	
		REV. : 1	PACKAGE: CHEMICAL DOSING SYSTEM
	SUB - SYSTEM : CHEMICAL DOSING SYSTEM	DATE :	CONTRACT NO.
		PAGE : 1 OF 4	MAIN SUPPLIER: BHEL/PEM, NOIDA

S.NO.	COMPONENTS/ OPERATION	CHARACTERISTICS CHECKED	CATEGORY	TYPE/ METHOD CHECK	EXTENT OF CHECK	REFERENCE DOCUMENT	ACCEPTANCE NORMS	FORMAT OF RECORDS	AGENCY** M	B	R	REMARKS
1	2	3	4	5	6	7	8	9	10			11
1.0	**WELDER'S QUALIFICATION**											
1.1	WELDING PROCEDURE SPECIFICATION (WPS)	CORRECTNESS	MA	SCRUTINY	100%	ASME IX	ASME IX	QW 482	P	V	V	
1.2	WELDER PERFORMANCE & PROCEDURE QUALIFICATION RECORD	WELD SOUNDNESS & WELDING PERFORMANCE	MA	PHYSICAL TEST	ASME IX	ASME IX	ASME IX	QW 483 & QW 484	P	V	V	
2.0	**TANKS**											
2.1	**RAW MATERIAL :**											
2.1.1	PLATE	CHEMICAL.& PHY. PROPERTIES	MA	CHEM &.PHY TEST	1/PLATE/HT BATCH	ASTM A 240 GR.TP 304	ASTM A 240 GR.TP 304	MFG.TC/LAB REPORT	P	V	V	IDENTIFICATION BY BHEL
		IGC TEST	MI	IGC TEST	1/PLATE/HT BATCH	ASTM A 262 PR.'E'	ASTM A 262 PR.'E'					
2.1.2	PIPE FOR NOZZLE	CHEMICAL.& PHY. PROPERTIES	MA	CHEM.& PHY.TEST	1/HT BATCH/SIZE	ASTM A 312 GR.TP 304	ASTM A 312 GR.TP 304	MFG.TC/LAB REPORT	P	V	V	
		MICRO STRUCTURE	MI	GRAIN STRUCTURE	1/HT BATCH/SIZE	FOR HEAT TREATMENT	FOR HEAT TREATMENT	MFG.TC/LAB REPORT	P	V	V	
		IGC TEST	MI	IGC TEST	1/HT BATCH/SIZE	ASTM A 262 PR.'E'	ASTM A 262 PR.'E'	MFG.TC/LAB REPORT	P	V	V	
		HYDRO TEST	NA	LEAKAGE	100%	NO LEAKAGE	NO LEAKAGE	MFG. TC/IR	P	V/W	V	REFER NOTE 4
2.1.3	FLANGES FOR TANKS	CHEMICAL & PHY PROPERTIES	MA	CHEM & PHY TEST	1/HT BATCH	ASTM A 182 GR. F 304	ASTM A 182 GR. F 304	MGF.TC/LAB REPORT	P	V	V	
2.2	**IN PROCESS**											
2.2.1	DISHED ENDS	DIMENSIONS	MA	MEASUREMENT WITH TEMPLATE	100%	APPD.DWG.(BY BHEL)	APPD.DWG.(BY BHEL)	MFG.TC./LAB REPORT	P	V	V	
		SURFACE DEFECTS ON WELDMENTS		DP TEST	100%	ASTM E 165	NO SURFACE DEFECTS	MFG.TC	P	V	V	
2.3	**FINAL ASSEMBLY FOR TANKS:**	DIMENSIONS &	MA	MEASUREMENT	100%	APPD.DWG.(BY BHEL)	APPD.DWG.(BY BHEL)	MFG.TC/INSP REPORT	P	W	W	TO BE OFFERED ALONG WITH FINAL SKID ASSEMBLY INSPECTION.
		ORIENTATION	MA	VISUAL		APPD.DWG.(BY BHEL)	APPD.DWG.(BY BHEL)	MFG.TC/INSP REPORT	P	W	W	
2.3.1		LEAKAGE	MA	WATER FILL FOR 2 HR	100%	N.A.	NO LEAKAGE	MFG.TC/INSP. REPORT	P	W	W	
3.0	**STIRRER :**											
3.1	RAW MATERIAL FOR SHAFT	CHEM.& PHY. PROPERTIES	MA	CHEM &.PHY TEST	1/BAR	ASTM A 479 GR.TP 304	ASTM A 479 GR.TP 304	MFG.TC/LAB REPORT	P	V	V	
		IGC TEST	MA	IGC TEST	1/HT BATCH	ASTM A 262 PR.'E'	ASTM A 262 PR.'E'	MFG.TC/LAB REPORT				
3.2	IMPELLER	CHEMICAL PROP.	MA	CHEMICAL TEST	1/PLATE	ASTM A 240 GR.TP 316	ASTM A 240 GR.TP 316	MFG.TC/LAB REPORT	P	V	V	
3.3	COMPLETE STIRRER UNIT WITH MOTOR	PERFORMANCE IN WATER FILLED TANK										
		- VIBRATION	MA	MEASUREMENT	100%	BHEL APPD.DATA SHEET	BHEL APPD.DATA SHEET	MFG.TC	P	V	V	
		- WOBBLING	MA	VISUAL	100%	NO WOBBLING	NO WOBBLING	MFG.TC	P	V	V	
		- POWER CONSUMPTION/ CURRENT DRAWN	MA	MEASUREMENT	100%	BHEL APPD.DATA SHEET	BHEL APPD.DATA SHEET	MFG.TC	P	V	V	
4.0	**MOTORS:**	ROUTINE TEST	MA	MFG. TC	100%	BHEL APPD.DATA SHEET	BHEL APPD.DATA SHEET	MFG.TC	P	V	V	
		TYPE TEST	MA	MFG. TC	1/ SIMILAR FRAME SIZE	BHEL APPD.DATA SHEET	BHEL APPD.DATA SHEET	MFG.TC	P	V	V	
		DEGREE OF PROTECTION	MA	MFG. TC	1/ SIMILAR FRAME SIZE	BHEL APPD.DATA SHEET	BHEL APPD.DATA SHEET	MFG.TC	P	V	V	

**** LEGEND :**

M : MANUFACUTRER/SUB-CONTRACTOR/SUB-VENDOR
B : BHEL/ NOMINATED INSPECTION AGENCY
R: CUSTOMER
"P" PERFORM, **"W"** WITNESS, AND **"V"** VERIFICATION

MANUFACTURER/ SUB CONTRACTOR	MAIN SUPPLIER--BHEL	
SIGNATURE		SIGNATURE OF APPROVAL BY CUSTOMER

THIS IS A PART OF TECHNICAL SPECIFICATION PE-TS-424-154-A001

MANUFACTURER'S NAME & ADDRESS :	QUALITY PLAN	PROJECT	TELANGANA SUPER THERMAL POWER PROJECT PHASE I (2 X 800 MW) SG PKG.
	ITEM: CHEMICAL DOSING SYSTEM	QP.NO :	
		REV. : 1	PACKAGE CHEMICAL DOSING SYSTEM
	SUB - SYSTEM :	DATE :	CONTRACT NO.
	CHEMICAL DOSING SYSTEM	PAGE : 2 OF 4	MAIN SUPPLIER BHEL/PEM, NOIDA

S.NO.	COMPONENTS/ OPERATION	CHARACTERISTICS CHECKED	CATEGORY	TYPE/ METHOD CHECK	EXTENT OF CHECK	REFERENCE DOCUMENT	ACCEPTANCE NORMS	FORMAT OF RECORDS	AGENCY** M	B	R	REMARKS
1	2	3	4	5	6	7	8	9	10			11
5.0	METERING PUMP:											
5.1	RAW MATERIAL :											
5.1.1	WETTED PARTS	CHEM & PHY. PROPERTIES	MA	CHEM. & PHY. TEST	1/BAR	BHEL APPD.DATA SHEET	BHEL APPD.DATA SHEET	MFG.TC/LAB REPORT	P	V	V	
		SURFACE TEST	MI	UT ON BAR>25 MM DIA	100%	ASTM A 388	REF. NOTE # 1	MFG.TC/LAB REPORT	P	V	V	
				DP ON M/C SURFACE	100%	ASME - E - 165	NO SURFACE DEFECTS	MFG.TC/LAB REPORT	P	V	V	
5.2	FINAL INSPECTION											
5.2.1	PUMP WITH MOTOR	LINEARITY	MA	PERFORMANCE	100%	API 675	API 675	INSPECTION REPORT	P	W	V	SHALL BE TESTED WITH EITHER JOB MOTOR OR SHOP MOTOR OF SIMILAR FRAME SIZE
		STEADY STATE ACCURACY	MA	SHOP TEST	100%	API 675	API 675	INSPECTION REPORT	P	W	V	
		REPEATABILITY	MA	SHOP TEST	100%	API 675	API 675	INSPECTION REPORT	P	W	V	
		POWER DRAWN @ 100% STROKE	MA	MEASURED AT WORK	100%	BHEL APPD.DATA SHEET	BHEL APPD.DATA SHEET	INSPECTION REPORT	P	W	V	
		LEAKAGE	MA	HYDRO TEST	100%	@1.5X DESIGN PRESSURE	NO LEAKAGE	INSPECTION REPORT	P	W	V	
		DIMENSIONS	MA	MEASUREMENT	100%	BHEL APPD.DATA SHEET/DWG	BHEL APPD.DATA SHEET/DWG	INSPECTION REPORT	P	W	V	
		NOISE	MA	MEASUREMENT	100%	--	< 85 dbA AT 1 M RADIUS	INSPECTION REPORT	P	W	V	
		VIBRATION	MA	MEASUREMENT	100%	--	≤45 MICRONS (PEAK TO PEAK)	INSPECTION REPORT	P	W	V	
7.0	PRESSURE RELIEF VALVE	SET & RESET PRESSURE.	MA	PERFORMANCE	100%	BHEL APPD.DATA SHEET & API RP-520	BHEL APPD.DATA SHEET & API RP-520	MFG. TC	P	V	V	
		DIMENSIONS	MA	MEASUREMENT	100%	BHEL APPD.DATA SHEET/DWG	BHEL APPD.DATA SHEET/DWG	MFG. TC	P	V	V	
		LEAKAGE DURING PERFORMANCE TEST	MA	VISUAL	100%	NO LEAKAGE	NO LEAKAGE	MFG. TC	P	V	V	
8	VALVES (GATE, GLOBE & NRV)											
8.1	RAW MATERIAL :											
8.1.1	BODY, BONNET COVER	CHEM.& PHY PROPERTIES	MA	CHEM.& PHY TEST	1/HT BATCH	BHEL APPD.DATA SHEET	BHEL APPD.DATA SHEET	MFG. TC/LAB REPORT	P	V	V	
		HEAT TREATMENT	MA	HEAT TREATMENT	1/HT BATCH	BHEL APPD.DATA SHEET	BHEL APPD.DATA SHEET	MFG. TC/LAB REPORT	P	V	V	
8.1.2	TRIM MATERIAL	CHEM.& PHY PROPERTIES	MA	CHEM.& PHY TEST	1/BAR/SIZE	BHEL APPD.DATA SHEET	BHEL APPD.DATA SHEET	MFG. TC/LAB REPORT	P	V	V	
8.2	ASSEMBLY											
		LEAKAGE (BODY & SEAT)		HYDRO TEST	100%	BHEL APPD.DATA SHEET	NO LEAKAGE	MFG TC	P	V	V	
		LEAKAGE (SEAT)		PNEUMATIC TEST	100%	BHEL APPD.DATA SHEET	NO LEAKAGE	MFG TC	P	V	V	
		DIMENSIONS		MEASUREMENT	100%	BHEL APPD.DATA SHEET/DWG	BHEL APPD.DATA SHEET/DWG	MFG TC	P	V	V	

MANUFACTURER/ SUB CONTRACTOR	MAIN SUPPLIER--BHEL	** LEGEND : M : MANUFACUTRER/SUB-CONTRACTOR/SUB-VENDOR B : BHEL/NOMINATED INSPECTION AGENCY "P" PERFORM, "W" WITNESS, AND "V" VERIFICATION	R: CUSTOMER
SIGNATURE			SIGNATURE OF APPROVAL BY CUSTOMER

THIS IS A PART OF TECHNICAL SPECIFICATION PE-TS-424-154-A001

		MANUFACTURER'S NAME & ADDRESS :		QUALITY PLAN				PROJECT	TELANGANA SUPER THERMAL POWER PROJECT PHASE I (2 X 800 MW) SG PKG.			
				ITEM: CHEMICAL DOSING SYSTEM		QP.NO : REV. : 1		PACKAGE	CHEMICAL DOSING SYSTEM			
				SUB - SYSTEM : CHEMICAL DOSING SYSTEM		DATE : PAGE : 3 OF 4		CONTRACT NO.				
								MAIN SUPPLIER	BHEL/PEM, NOIDA			
S.NO	COMPONENTS/ OPERATION	CHARACTERISTICS CHECKED	CATEGORY	TYPE/ METHOD CHECK	EXTENT OF CHECK	REFERENCE DOCUMENT	ACCEPTANCE NORMS	FORMAT OF RECORDS	AGENCY** M	B	R	
1	2	3	4	5	6	7	8	9	10			11
9.0	FITTING/FLANGES FOR PIPING:											
9.1	RAW MATERIAL	CHEM.& PHY PRPERTIES	MA	CHEM.& PHY TEST	1/HT BATCH	ASTM A 182 GR.TP 304	ASTM A 182 GR.TP 304	MFG.TC/LAB REPORT	P	V	V	
		HEAT TREATMENT	MA	HEAT TREATMENT	100%	ASTM A 182 GR.TP 304	ASTM A 182 GR.TP 304	MFG.TC/LAB REPORT	P	V	V	
		IGC TEST	MI	IGC TEST	1/HT BATCH	ASTM A 262 PR. 'E'	ASTM A 262 PR. 'E'	MFG.TC/LAB REPORT	P	V	V	
9.2	FINAL INSPECTION	DIMENSIONS	NA	MEASUREMENT	100%	BHEL APPD.DATA SHEET/DWG/ ANSI B 16.11/16.5	BHEL APPD.DATA SHEET/DWG/ ANSI B 16.11/16.5	MFG.TC	P	V	V	
10.0	STRAINERS :											
10.1	RAW MATERIAL FOR BODY	PHY.& CHEM. PROPERTIES	MA	PHY. & CHEM.TEST	1/BAR/SIZE	BHEL APPD.DATA SHEET	BHEL APPD.DATA SHEET	MFG.TCLAB REPORT	P	V	V	
10.2	SCREEN	CHEMICAL	MA	CHEMICAL	1/SIZE	BHEL APPD.DATA SHEET	BHEL APPD.DATA SHEET	MFG.TC/LAB REPORT	P	V	V	
		MESH SIZE	MA	MEASUREMENT	1/SIZE	BHEL APPD.DATA SHEET	BHEL APPD.DATA SHEET	MFG.TC/LAB REPORT	P	V	V	
10.3	FINAL INSPECTION	DIMENSIONS	MA	MEASUREMENT	100%	BHEL APPD.DATA SHEET	BHEL APPD.DATA SHEET	MFG.TC	P	V	V	
		LEAKAGE		HYDRO TEST	1	BHEL APPD.DATA SHEET	NO LEAKAGE	MFG.TC	P	V	V	
11.0	PIPE (SEAMLESS)											
11.1	MATERIAL	CHEMICAL	MA	CHEMICAL	1/HT BATCH/SIZE	ASTM A 312 GR.TP 304	ASTM A 312 GR.TP 304	MFG.TC/LAB REPORT	P	V	V	IDENTIFICATION BY BHEL. REFER NOTE 4.
		MECHANICAL TEST	MA	MECHANICAL TEST	1/HT BATCH/SIZE	ASTM A 312 GR.TP 304	ASTM A 312 GR.TP 304	MFG.TC/LAB REPORT	P	V	V	
		MICRO STRUCTURE	MI	GRAINS STRUCTURE	1/HT BATCH/SIZE	FOR HEAT TREATMENT	FOR HEAT TREATMENT	MFG.TC/LAB REPORT	P	V	V	
		IGC TEST	MI	IGC TEST	1/HT BATCH/SIZE	ASTM A 262 PR 'E'	ASTM A 262 PR 'E'	MFG.TC/LAB REPORT	P	V	V	
		HYDRO TEST	MA	LEAKAGE	100%	NO LEAKAGE	NO LEAKAGE	MFG.TC/IR	P	V/W	V	
12.0	LEVEL GAUGE :											
12.1	RAW MATERIAL	CHEM.PROPERTIES	MA	CHEM.TEST	1/HT BATCH	BHEL APPD.DATA SHEET	BHEL APPD.DATA SHEET	MGF.TC/LAB REPORT	P	V	V	
12.2	FINAL INSPECTION	DIMENSION	MA	MEASUREMENT	100%	BHEL APPD.DATA SHEET	BHEL APPD.DATA SHEET	MFG.TC	P	V	V	
		LEAKAGE	MA	HYDRO TEST	100%	BHEL APPD.DATA SHEET	NO LEAKAGE	MFG.TC	P	V	V	
13.0	PRESSURE & DP GAUGE											INSTRUMENTS AS APPLICABLE FOR THE MODULE ORDERED SHALL BE CONSIDERED.
13.1	MAT. FOR WETTED PARTS & BOUR	CHEM.PROPERTIES	MA	CHEM.TEST	1/HT BATCH	BHEL APPD.DATA SHEET	BHEL APPD.DATA SHEET	MFG.TC/LAB REPORT	P	V	V	
13.2	FINAL INSPECTION	DIMENSIONS	MA	MEASUREMENT	100%	BHEL APPD.DATA SHEET/DWG	BHEL APPD.DATA SHEET/DWG	MFG.TC/LAB REPORT				
13.3	PERFORMANCE	ACCURACY & OVERLOAD PROTECTION	MA	CALIBRATION	100%	BHEL APPD.DATA SHEET	BHEL APPD.DATA SHEET	MFG. TC	P	V	V	
14.0	SWITCHES(LEVEL, PRESURE & DP) & TRANSMITTERS (LEVEL, PRESSURE & DP):											
14.1	MAT. FOR WETTED PARTS	CHEM.PROPERTIES	MA	CHEM.TEST	1/HT BATCH	BHEL APPD.DATA SHEET	BHEL APPD.DATA SHEET	MFG.TC/LAB REPORT	P	V	V	
14.2	PERFORMANCE	FUNCTIONAL	MA	CALIBRATION & VISUAL	100%	BHEL APPD.DATA SHEET	BHEL APPD.DATA SHEET	MFG.TC	P	V	V	
		IR-HV-IR		ELECTRICAL	100%	BHEL APPD.DATA SHEET	BHEL APPD.DATA SHEET	MFG.TC	P	V	V	
		DIMENSIONS		MEASUREMENT	100%	BHEL APPD.DATA SHEET/DWG	BHEL APPD.DATA SHEET/DWG	MFG.TC	P	V	V	
		DEGREE OF PROTECTION	MI	VERIFICATION OF TYPE TEST CERT	TYPE TEST	BHEL APPD.DATA SHEET	BHEL APPD.DATA SHEET	MFG.TC/LAB REPORT	P	V	V	

MANUFACTURER/ SUB CONTRACTOR	MAIN SUPPLIER--BHEL	** LEGEND : M : MANUFACUTRER/SUB-CONTRACTOR/SUB-VENDOR B : BHEL/NOMINATED INSPECTION AGENCY R: CUSTOMER "P" PERFORM, "W" WITNESS, AND "V" VERIFICATION	
SIGNATURE			SIGNATURE OF APPROVAL BY CUSTOMER

THIS IS A PART OF TECHNICAL SPECIFICATION PE-TS-424-154-A001

BHEL	MANUFACTURER'S NAME & ADDRESS :	QUALITY PLAN ITEM: CHEMICAL DOSING SYSTEM SUB - SYSTEM : CHEMICAL DOSING SYSTEM QP.NO : REV. : 1 DATE : PAGE : 4 OF 4	PROJECT: TELANGANA SUPER THERMAL POWER PROJECT PHASE I (2 X 800 MW) SG PKG. PACKAGE: CHEMICAL DOSING SYSTEM CONTRACT NO. MAIN SUPPLIER: BHEL/PEM, NOIDA

S.NO.	COMPONENTS/ OPERATION	CHARACTERISTICS CHECKED	CATEGORY	TYPE/ METHOD CHECK	EXTENT OF CHECK	REFERENCE DOCUMENT	ACCEPTANCE NORMS	FORMAT OF RECORDS	AGENCY** M	B	R	REMARKS
1	2	3	4	5	6	7	8	9	10			11
15.0	**CONTROL PANEL :**	DIMENSIONS	MA	MEASUREMENT	100%	BHEL APPD.DATA SHEET/DWG	BHEL APPD.DATA SHEET/DWG	INSPECTION REPORT	P	W	W	CONTOL PANEL TEST TO BE OFFERED ALONG WITH FINAL SKID ASSEMBLY.
		CONTINUITY, IR-HV-IR	MA	ELECTRICAL	100%	BHEL APPD.DATA SHEET/DWG	BHEL APPD.DATA SHEET/DWG	INSPECTION REPORT	P	W	W	
		VERIFICATION OF MAKE	MA		100%	BHEL APPD.DATA SHEET/DWG	BHEL APPD.DATA SHEET/DWG	INSPECTION REPORT	P	W	W	
		RATING OF COMPONENTS	MA		100%	BHEL APPD.DATA SHEET/DWG	BHEL APPD.DATA SHEET/DWG	INSPECTION REPORT	P	W	W	
		PAINT SHADES, THICKNESS	MA		100%	BHEL APPD.DATA SHEET/DWG	BHEL APPD.DATA SHEET/DWG	INSPECTION REPORT	P	W	W	
		ADHESION	MA		100%	BHEL APPD.DATA SHEET/DWG	BHEL APPD.DATA SHEET/DWG	INSPECTION REPORT	P	W	W	
		DEGREE OF PROTECTION	MI	VERIFICATION OF TYPE TEST CERTIFICATE	TYPE TEST	BHEL APPD.DATA SHEET/DWG	BHEL APPD.DATA SHEET/DWG	MFG.TC/LAB REPORT	P	V	W	
16.0	**COMPLETE SKID ASSEMBLY:**	DIMENSIONS & ORIENTATION	CR	MEASUREMENT	100%	BHEL APPD.DATA SHEET/DWG	BHEL APPD.DATA SHEET/DWG	INSPECTION REPORT	P	W	W	
		LEAKAGE, CHECK ON WELDMENTS		VISUAL & HYDRO TEST	100%	DISCH.PIPING - 1.5 x DISCH PR. OF PUMP	NO LEAKAGE	INSPECTION REPORT	P	W	W	
		FUNCTIONAL TEST FOR INTERLOCKS	MA	VISUAL	100%	BHEL APPD.DATA SHEET/DWG	BHEL APPD.DATA SHEET/DWG	INSPECTION REPORT	P	W	W	
	PMI Test for SS	GRADE CONFIRMATION	MA	CHEM.TEST	100%	BHEL APPD.DATA SHEET/DWG	BHEL APPD.DATA SHEET/DWG	INSPECTION REPORT	P	W	W	
		PAINTING	MA	VISUAL & MEASUREMENT	100%	BHEL APPD PAINTING SCHEME	APPD DWG/PAINTING	INSPECTION REPORT	P	W	W	

NOTE-1) WHEN BACK WALL ECHO IS SET TO 100% OF FSH IN SOUND AREA, DEFECT ECHO SHALL NOT EXCEED 20% OF FSH. MAX BACH WALL ECHO IS 20% OF FSH. TOTAL NO OF DEFECTS SHALL BE MAX. 5 NO IN ONE METER LENGTH. MIN DISTANCE BETWEEN TWO DEFECTS SHALL BE 3 TIMES THE DIA OF BAR.

NOTE-2) CHEMICAL DOSING SKID VENDOR SHALL BE SELECTED FROM CUSTOMER APPROVED SOURCES. ALL THE BOUGHT OUT ITEMS OF THE CHEMICAL DOSING VENDOR SHALL BE PROCURED FROM BHEL APPROVED SOURCES.

NOTE- 3) ALL VENDOR DRAWINGS/DATASHEETS SHALL BE APPROVED BY BHEL. ONLY MANUFACTURING QP(PREPARED IN LINE WITH THIS STANDARD QP) OF THE VENDOR SHALL BE FORWARDED FOR CUSTOMER APPROVAL. ALL THE BHEL APPROVED DOCUMENTS SHALL BE FURNISHED TO CUSTOMER FOR INFORMATION/RECORDS ALONG WITH O&M MANUAL. COPY OF THE SAME SHALL ALSO BE FURNISHED TO INSPECTION AGENCY DURING INSPECTION.

NOTE 4) FOR PIPES PURCHASED DIRECTLY FROM MANUFACTURER'S OR AUTHORIZED DEALERS, APART FROM TC REVIEW, CHECK WILL BE AS PER CLAUSE 2.1.2 AND 10.0; HOWEVER FOR HYDRAULIC TEST, MANUFACTURER TC SHALL BE REVIEWED . IN CASE ON IMPORTED PIPES PURCHASED FROM OPEN MARKET, TEST SHALL BE PERFORMED AS PER CLAUSE 2.1.2 AND 10.0 (INCLUDING HYDRAULIC TEST).

NOTE 5) FOR RAW MATERIAL (BARS/PIPES/CASTINGS/FORGINGS) WHERE HEAT TREATMENT ARE CARRIED OUT BY MATERIAL PRODUCERS ON BULK QUANTITIES, THEIR TEST CERTIFICATE SHALL BE REVIEWED (EXCEPT TIME TEMPERATURE CHART)

NOTE 6) NDT REQUIREMENT ON WELDING (TANK, PIPE, BREATHER/WATER SEAL/CO2 ABSORBER) SHALL BE AS -- A) ON BUTT WELD-- 25% DP & 25% RT FOR PUMP SUCTION SIDE & 100% DP & 100% RT FOR PUMP DISCHARGE SIDE. B) ON FILLET WELD--100% DP TEST

MANUFACTURER/ SUB CONTRACTOR	MAIN SUPPLIER--BHEL	** LEGEND : **M** : MANUFACUTRER/SUB-CONTRACTOR/SUB-VENDOR **B** : BHEL/NOMINATED INSPECTION AGENCY R: CUSTOMER	
SIGNATURE		"P" PERFORM, "W" WITNESS, AND "V" VERIFICATION	SIGNATURE OF APPROVAL BY CUSTOMER

THIS IS A PART OF TECHNICAL SPECIFICATION PE-TS-424-154-A001

ANNEXURE II: SUB VENDORS LIST

SUB VENDOR LIST - MECHANICAL

SR. NO.	ITEM	SUPPLIERS	PLACE	REMARKS
1.	TANKS/DISSOLVING BASKETS/WATER SEAL/CO2 ABSORBER/ BREATHER	SELF MAKE OF MAIN VENDOR		
2.	METERING PUMPS	VK PUMPS	NASIK	
		MILTON ROY INDIA	CHENNAI	
		SWELLORE	AHMEDABAD	
		POSITIVE METERING PUMPS	NASIK	
		METACHEM	MUMBAI	
3.	AGITATOR	REMI PEOCESS PLANT & M/C	MUMBAI	
		FIBRE & FIBRE	MUMBAI / SILVASA	
		CEECONS	CHENNAI	
		STANDARD ENGINEERS	MUMBAI	
4.	BALL VALVE (MANUAL /PNEUMATIC/ ELECTRIC) CLASS 150	A.V. VALVES LTD	AGRA	
		AKAY INDUSTRIES PVT.LTD.	DHARWAD	
		BELGAUM AQUA VALVES PVT. LTD.	BELGAUN	
		ASIAN INDUSTRIAL VALVES & INSTRUMENTS.	CHENNAI	
		ATAM VALVES PVT. LTD.	JALANDHAR	
		DEMBLA VALVES LTD.	THANE	
		M/S GM ENGINEERING	RAJKOT	
		HAWA VALVES (INDIA) PVT. LTD.	NAVI MUMBAI	
		INTERVALVE (INDIA) LTD.	PUNE	
		LEADER VALVES LTD.	JALANDHAR	
		MICROFINISH VALVES PVT LTD.	HUBLI	
		NILON VALVES PRIVATE LIMITED	AHMEDABAD	
		SURYA VALVES AND INSTRUMENTS MFG CO.	CHENNAI	
		UNIFLOW	CHENNAI	
		VALTECH INDUSTRIES	MUMBAI	
		VAAS AUTOMATION PVT. LTD.	NEW DELHI	
		WEIR BDK VALVES- A UNIT OF WEIR INDIA PVT. LTD.	NEW DELHI	
5.	DIAPHRAGM VALVE (MANUAL / PNEUMATIC) CLASS 150	WEIR BDK	HUBLI	
		CRANE FLOW PROCESS	SATARA	
		PROCON	MUMBAI	
		MAJESTIC VALVES (LABLINE)	-	
		HAWA ENGINEERS	AHMEDABAD	
6.	DUAL PLATE CHECK	ADVANCE VALVES PVT. LTD.	NOIDA	

	VALVES	FLUIDLINE VALVES COMPANY PVT.LTD.	GHAZIABAD	1. DUAL PLATE CHECK VALVE CI - CLASS 150 & UP TO 600NB, 2. DUAL PLATE CHECK VALVE CCS - CLASS 150 & UP TO 500NB
		R AND D MULTIPLES (METAL CAST) PVT LTD	MUMBAI	
		VENUS PUMPS AND ENGG. WORKS	KOLKATA	CI ,CCS & STAINLESS STEEL SPRING ASSISTED DUAL PLATE CHECK VALVES UPTO 700 NB AND 150 CLASS RATING.
7.	**Y-TYPE STRAINER / STRAINER (WATER SERVICE)**	OTOKLIN GLOBAL BUSINESS LIMITED	MUMBAI	
		GRAND PRIX	NEW DELHI	
		JAYPEE	NEW DELHI	
		GREAVES COTTON	MUMBAI	
		MULTITEX FILTRATION ENGINEERS LIMITED,	NEW DELHI / NOIDA	
		FILTERATION ENGINEERS (I) PVT. LTD	MUMBAI	
		FLUIDNYE	-	
		SUNGOV ENGINEERING PVT. LTD.	DELHI	
		GRAND PRIX	FARIDABAD	
		JAYPEE INDUSTRIES PVT. LTD.	DELHI	
		BHATIA ENGINEERING CO.	DELHI	
8.	**SS PIPES / TUBES**	APEX TUBES	BEHROR (ALWAR)	
		RATNAMANI	CHATTRAL	
		REMI	TARAPUR	
		PRAKASH STEELAGE	-	
9.	**SAFETY SHOWER**	UNICARE	-	
		MOHAN INDUSTRIES	-	
		SUPER SAFETY SERVICES	-	
10.	**STROKE CONTROLLER**	V K PUMPS	NASIK	
		METACHEM	MUMBAI	
		SWELORE	AHMEDABAD	
		MILTON ROY INDIA	CHENNAI	
11.	**SAFETY VALVES/RELIEF VALVES**	METACHEM	MUMBAI	
		KEYSTONE	BARODA	
		V K PUMPS	NASIK	
		MILTON ROY	CHENNAI	
12.	**STEEL GATE/GLOBE/NR**	A.V. VALVES LTD	AGRA	

	VALVES	ATAM VALVES PVT. LTD.	JALANDHAR	(1) CARBON STEEL GATE VALVES & NON RETURN VALVES: 15 NB TO 50 NB (#800) & 65 NB TO 300 NB (#150) (2) CARBON STEEL GLOBE VALVES: 15 NB TO 50 NB (#800) & 65 NB TO 200 NB (#150)
		FLUIDLINE VALVES COMPANY PVT.LTD.	KAUSHAMBI	
		M/S GM ENGINEERING	RAJKOT	
		INTERVALVE (INDIA) LTD.	PUNE	A) STEEL GATE VALVES: UPTO 50NB, #800 AND 65NB TO 150NB, #150 B) STEEL GLOBE VALVES: UPTO 50NB, #800 AND 65NB TO 100NB, #150 C)SUPPLIER NOT REGISTERED FOR NR VALVES
		LEADER VALVES LTD.	JALANDHAR	
		NITON VALVE INDUSTRIES PVT LTD	MUMBAI	
		NSSL LIMITED.	NAGPUR	
		STEEL STRONG VALVES (I) PVT. LTD.	NAVI MUMBAI	LIMITED TO RANGES & CLASSES AS AVAILABE IN VD FILE.
		VENUS PUMPS AND ENGG. WORKS	KOLKATA	CC/CSS-GATE-BBT-UPTO600NB CL UPTO300,GATE-PSBT UPTO250NB CL 1500,GLV-BBT-UPTO300NB CL UPTO600,SCNRV-BBT-UPTO600NB CL UPTO150,SCNRV-BBT-UPTO300NB CL 300,SCNRV-PSBT-UPTO150NB CL UPTO900
		VALTECH INDUSTRIES	MUMBAI	CAST CARBON & ALLOY STEEL - VALVE/RATING/SIZE-GV/150/900, GV/300/400, GV/600/300, GV/GLV/NRV/900/250, GLV/300/300, GLV/150/350, SCNRV/150/700, SCNRV/300/350, SCNRV/600/250.

		V.K. VALVES PVT. LTD.,	JALANDHAR	
		WEIR BDK VALVES- A UNIT OF WEIR INDIA PVT. LTD.	NEW DELHI	
13.	FITTINGS (CS/SS)	M.S. FITTINGS	KOLKATA	
		METAL LLOYDS	MUMBAI	
		TRUE FORGE	FARIDABAD	
		TUBE PRODUCTS	BARODA	
		NL HAZRA	KOLKATA	
		GUJRAT INFRA PIPES	BARODA	
		EDWARDS	USA	
		PIPEFIT ENGINEERS	BARODA	
		SIDDARTH & GAUTAM	FARIDABAD	
		EBY	MUMBAI	
14.	FLANGES (SS/CS)	PRADEEP METALS LTD	MUMBAI	
		TUBE PRODUCT INCOROPORATION	BARODA	
		MS FITTINGS	KOLKATA	
		HAWA ENGINEERING	-	
		ALIANCE PIPE & PLANGES	KOLKATA	
		JAI AMBE	MUMBAI	
15.	PAINT			
		BERGER PAINTS INDIA LTD		
		GOODLASS NEROLAC		
		JENSON & NICHOLSON (I) LTD		
		CDC CARBOLINE (I) LTD.		
		SHALIMAR PAINTS LTD.		
		ADDISON PAINTS LTD		
		GRAND POLYCOAT		
		BOMBAY PAINTS		
		HEMPLE PAINTS (SINGAPORE)		
		JOTUN PAINTS		
16.	MOTORISED ACTUATOR	ROTARK	-	
		AUMA	-	
		LIMITORK	-	

NOTE:

1. THE SUB VENDOR LIST ABOVE IS INDICATIVE ONLY AND IS SUBJECT TO BHEL AND CUSTOMER APPROVAL DURING DETAILED ENGINEERING STAGE WITHOUT ANY COMMERCIAL & DELIVERY IMPLICATION TO BHEL.

   BIDDER TO PROPOSE SUB VENDOR WITHIN 4 WEEKS OF PLACEMENT OF LOI. THEREAFTER NO REQUEST FOR ADDITIONAL SUB-VENDOR SHALL BE ENTERTAINED.

2. DEALERS ARE NOT ACCEPTABLE FOR ANY ITEM OF THE PACKAGE. BIDDER SHALL PROCURE ALL ITEMS INCLUDING PLATES, STRUCTURAL, FLANGES; COUNTER FLANGES ETC. FROM APPROVED SUB VENDOR ONLY.

3. THE INSPECTION CATEGORY WILL BE INTIMATED AFTER AWARD OF CONTRACT BY BHEL/CUSTOMER. HOWEVER THE SAME WILL BE ADHERED BY THE BIDDER WITHOUT ANY COMMERCIAL AND DELIVERY IMPLICATION TO BHEL/ CUSTOMER.

SUB VENDOR LIST ELECTRICAL

S. No.	Deptt.	Package	Vendor/ Sub Vendor	Vendor Address	Remarks
1	Electrical	LV MOTORS (NON FLAME PROOF)	ABB	14, MATHURA ROAD, FARIDABAD, HARYANA-121003	Sub vendor
2	Electrical	LV MOTORS (NON FLAME PROOF)	BHARAT BIJLEE LTD.	BHARAT BIJLEE LIMITED, 1ST FLOOR, 7-B, RAJINDRA PARK, PUSA ROAD, NEW DELHI - 110 060.	Sub vendor
3	Electrical	LV MOTORS (NON FLAME PROOF)	CROMPTON GREAVES	3RD FLOOR, EXPRESS BUILDING,9-10, BAHADUR SHAH ZAFAR MARG, NEAR ITO CROSSING,NEW DELHI-110002, INDIA	Sub vendor
4	Electrical	LV MOTORS (NON FLAME PROOF)	GE-POWER	KAMAK TOWER, 3RD FLOOR, PLOT NO. 12-A, TVK INDUSTRIAL ESTATE, EKKADUTHANGAL, GUINDY, CHENNAI-600032	Sub vendor
5	Electrical	LV MOTORS (NON FLAME PROOF)	KIRLOSKAR ELECTRIC CO LTD.	P.O. BOX 5555 , MALLESWARAM WEST ,BANGALORE 560055	Sub vendor
6	Electrical	LV MOTORS (NON FLAME PROOF)	LAXMI HYDRAULICS PVT. LTD	129/130, INDUSTRIAL ESTATE PATIL NAGAR, HOTGI ROAD SOLAPUR-413003, MAHARASHTRA	Sub vendor
7	Electrical	LV MOTORS (NON FLAME PROOF)	MARATHON	MARATHON ELECTRIC INDIA PRIVATE LTD.SECTOR - 11, MODEL TOWN, FARIDABAD - 121006	Sub vendor
8	Electrical	LV MOTORS (NON FLAME PROOF)	NGEF	POCKET NO.10, FLAT NO. 37 & 38, EXPANDABLE DDA FLATS, NASIRPUR DWARKA, PHASE-I NEW DELHI-110 045	Sub vendor
9	Electrical	LV MOTORS (NON FLAME PROOF)	RAJINDRA ELECT INDUSTRIES	14 SHAH IND.ESTATE VEERA DESAI RD,ANDHERI(W) MUMBAI-400053	Sub vendor
10	Electrical	LV MOTORS (NON FLAME PROOF)	SIEMENS	RC-IN I S NR DEL AREA, JIL BUILDING, TOWER-B, PLOT NO. 78, SECTOR 18, GURGAON-122015, INDIA	Sub vendor
11	Electrical	LV MOTORS (FLAME PROOF)	RAJINDRA ELECT INDUSTRIES	14 SHAH IND.ESTATE VEERA DESAI RD,ANDHERI(W) MUMBAI-400053	Sub vendor

SUB VENDOR LIST C&I

NTPC	PROJECT : TELANGANA STPP (2 x 800 MW)	LIST OF ITEMS REQUIRING QP	REF. NO : 9591-101-2
	PACKAGE : Steam Generator (SG) PACKAGE	APPROVAL & ACCEPTABLE	REVISION NO : 00
	CONTRACTOR : BHEL - PEM, HYD, Trichy, PC, EDN, ISG	VENDOR AS APPROVED BY	DATE : 06/05/2015
	CONTRACT NO : 9591-101-2		

No.	Major Equipment	QP Inspection Category	QP No. 9582-001-QVI-Q	QP Submission SCH	QP Approval SCH	Proposed Sub Supplier	Country	SS Approval Status	SS Detail Sub.SCH	SS Approval SCH	Remark
22	Electronic transmitters (pressure, DP)	III				EMERSON (Rosemount)	USA/ Pawane	A			
		III				FUJI ELECTRIC	China	A			
		III				YOKOGAWA	JAPAN	A			Testing and Calibration at M/s YIL, Bangalore is also acceptable.
		II				ABB	Bangalore	A			Model - 2600 T
		III				ABB	GERMANY / Italy	A			Model - 2600 T
		III				Siemens	France / India	A			
		III				Honeywell	Pune	A			
		*				ENDRESS & HOUSER	Aurangabad/ Germany	DR			
23	Thermocouples, RTD & Thermowell	III				HERAUS SENSOR	GERMANY	A			
		III				WISE Control	Korea	A			
		II				Tempsens	Udaipur	A			
		II				Pyroelectric	Goa	A			
		II				Detriv Instrumentation & Electronics Ltd	Mumbai	A			
		III				Minco	USA	A			
		III				OKAZAKI corporation	JAPAN	A			
		III				Yamari	JAPAN	A			
		III				Yamari	Singapore	A			For RTD Reference list and Performance feedback is to be submitted.
		III				ABB(SENSYCON)	Germany	A			
		III				EMERSON (Rosemount)	Germany	A			
		II				EMERSON (Rosemount)	Pawane	A			Imported from Emerson, Germany (make)
		II				Thermal Instruments(GIC)	Savantwadi	A			
		II				Techno Instruments	Ahamadabad	A			
		II				GOA Instrument Industries	GOA	A			For Thermowell only
		*				GOA Instrument Industries	GOA	DR			M/s BHEL will forward only two proposals after details review of NTPC Technical specification requirements.
		*				WIKA	Pune	DR			
		*				Toshniwal Industries	Ajmer	DR			
		*				E & H	Aurangabad	DR			

NTPC	PROJECT : TELANGANA STPP (2 x 800 MW)	LIST OF ITEMS REQUIRING QP	REF. NO : 9591-101-2
	PACKAGE : Steam Generator (SG) PACKAGE	APPROVAL & ACCEPTABLE	REVISION NO : 00
	CONTRACTOR : BHEL - PEM, HYD, Trichy, PC, EDN, ISG	VENDOR AS APPROVED BY	DATE : 06/05/2015
	CONTRACT NO : 9591-101-2		

No.	Major Equipment	QP Inspection Category	QP No. 9582-001-QVI-Q	QP Submission SCH	QP Approval SCH	Proposed Sub Supplier	Country	SS Approval Status	SS Detail Sub.SCH	SS Approval SCH	Remark
		*				Nesstech	Vapi	DR			
		*				Baumer	Vapi	DR			
24	Ultrasonic type level Transmitter	III				E & H	Aurangabad/ Germany	A			
		III				EMERSON	Pawane	A			
		III				SIEMENS MILTRONICS	CANADA	A			
		III				Nivelco	Hungery	A			
		*				Vega	Germany	DR			M/s BHEL will forward only two proposals after details review of NTPC Technical specification requirements.
		*				Khrone	France / USA / Pune	DR			
		*				Yokogawa	Bangalore	DR			
		*				Honeywell	India	DR			
		*				Magnetrol	Belgium	DR			
		*				ABB	Germany / India	DR			
25	Orifice plate assembly	III				Instrumentation Limited	Palghat	A			
		III				Microprecision	Faridabad	A			
		III				Starmech	Pune	A			
		III				Flow Star	Faridabad	A			
		III				SEIKO	Austria	A			
		III				MINCO (GIC)	GOA	A			
		III				WISE Control	Korea	A			
		III				T M Technomatic	Italy	A			
		*				IEPL	Hyderabad	DR			
		*				Engg. Specialities	Kolkata	DR			
		*				BALIGA	CHENNAI	DR			
		*				Pyroelectric	Mumbai	DR			
		*				Hydropneumatics	Mapusa	DR			
26	Pressure, DP Gauge	III				BUDENBERG	UK	A			
		III				ASHCROFT	USA/Germany/ India	A			
		III				Wika	GERMANY	A			
		III				WISE Control	Korea	A			
		III				Nagano KEIKI	Japan	A			
		III				H.Guru South India	Bangalore	A			Not for MS & FW application
		III				A.N. Instruments	Kolakatta	A			Not for MS & FW application
		III				Gauge Bourdon(GIC)	Panvel	A			

NTPC	PROJECT : TELANGANA STPP (2 x 800 MW)	LIST OF ITEMS REQUIRING QP	REF. NO : 9591-101-2
	PACKAGE : Steam Generator (SG) PACKAGE	APPROVAL & ACCEPTABLE	REVISION NO : 00
	CONTRACTOR : BHEL - PEM, HYD, Trichy, PC, EDN, ISG	VENDOR AS APPROVED BY	DATE : 06/05/2015
	CONTRACT NO : 9591-101-2		

No.	Major Equipment	QP Inspection Category	QP No. 9582-001-QVI-Q	QP Submission SCH	QP Approval SCH	Proposed Sub Supplier	Country	SS Approval Status	SS Detail Sub.SCH	SS Approval SCH	Remark
		III				Goa Thermostatic	GOA	A			Not for MS & FW application
		III				Wika	Pune	A			DR for MS & FW application
		III				Baumer	Vapi	A			DR for MS & FW application
		III				Ashcroft (Mass Brand)	Gandhinagar	A			Not for MS & FW application
		III				H Guru	Rishra/Muzaffarpu	A			Not for MS & FW application
		*				US Gauge	USA	DR			
		*				Winters	USA	DR			
		III				Forbes Marshall	Hyderabad	A			
		*				Manometer	Mumbai	DR*			
		III				Walchandnagar Industries Ltd.	Dharwad	A			
		*				Nesstech	Vapi	DR			
		*				Gauges Bourdon	UK	DR			
27	Level gauge (Transperent & Reflex, Tubular type)	III				Nihon Klingage Co.,Ltd	Japan	NOTED			
		III				Bunkabokei Kogyo Co., Ltd	Japan	NOTED			
		III				tokyo keiso	Japan	NOTED			
		III				Chemtrol Samil (I) Pvt. Ltd.	Mumbai	NOTED			
		III				Levcon	Kolkatta	NOTED			
		III				Sigma	Mumbai	NOTED			Up to 40 Kg/cm2
		III				SBEM	Pune	NOTED			Up to 40 Kg/cm3
		III				Chemtrol	GOA	NOTED			Up to 40 Kg/cm4
		III				ASIAN INDUSTRIAL VALVES	CHENNAI	NOTED			Up to 40 Kg/cm5
		III				D.K.Instruments	Kolkotta	NOTED			Up to 40 Kg/cm2
		III				Flow Star	Faridabad	NOTED			Up to 40 Kg/cm2
		III				V-Automat	NewDelhi	NOTED			
		III				DEMPER KOGYO	JAPAN	NOTED			
		III				Kubler	Germany	NOTED			
		III				WIKA	PUNE	NOTED			Up to 40 Kg/cm2
		III				WAREE	VAPI	NOTED			Up to 40 Kg/cm2
		III				Gauges Bourdon (GIC)	Panvel	NOTED			
		III				Magnetrol	Belgium	NOTED			
		III				Khrone	Germany	NOTED			
		III				PUNE TECHTROL	Pune	NOTED			
		III				E & H	Aurangabad	NOTED			
28	Press, DP, Vaccum Switch	III				SOR	USA	A			
		III				DRESSOR (ASHCROFT)	USA/Germany	A			

NTPC	PROJECT : TELANGANA STPP (2 x 800 MW)	LIST OF ITEMS REQUIRING QP	REF. NO : 9591-101-2
	PACKAGE : Steam Generator (SG) PACKAGE	APPROVAL & ACCEPTABLE	REVISION NO : 00
	CONTRACTOR : BHEL - PEM, HYD, Trichy, PC, EDN, ISG	VENDOR AS APPROVED BY	DATE : 06/05/2015
	CONTRACT NO : 9591-101-2		

No.	Major Equipment	QP Inspection Category	QP No. 9582 001-QVI-Q	QP Submission SCH	QP Approval SCH	Proposed Sub Supplier	Country	SS Approval Status	SS Detail Sub.SCH	SS Approval SCH	Remark
		III				Switzer	Chennai	A			
		III				Levcon	Klokatta	A			
		III				DK Instrument	Kolkatta	A			
		III				Khrone Marshal	Pune	A			
		III				Chemtrol	India	DR			
		III				V Automat	NewDelhi	DR			
		III				Gauges Bourdon	Panvel	A			
		III				Magnetrol	Belgium	A			
		III				Ashcroft	Germany	A			
		III				Auxitrol	UK	A			
		III				Mericoid	USA	A			
		III				Delta Control	UK	A			
		III				Merium	USA	A			
		*				Sunag Corporation		DR			
31	Condensing Pots	III				INSTRUMENTATION LIMITED	PALGHAT	NOTED			
		III				MICRO PRECISION	FARIDABAD	NOTED			
		III				WOOJIN	Korea	NOTED			
		III				SAM IL	Korea	NOTED			
		III				Excel Hydro	Mumbai	NOTED			
		III				Flow tech	Calcutta	NOTED			
		III				Baldota	Mumbai	NOTED			
		III				Precision	Mumbai	NOTED			
		III				Metpress	Calcutta	NOTED			
		III				HP Valves and fittings	Chennai	NOTED			
		III				Main Contractor Approved Sources		NOTED			
32	Electric to Pneumatic converter	III				IMI NORGEN	India	A			Make : WATSON SMITH
		III				Fair child	USA	A			
		*				ABB	India	A			Subject to meeting the NTPC specificaton requirement
		*				SMC Pneumatics	Noida	DR			
		*				P & F	Bangalore	DR			
		*				Fairchild India Pvt. Ltd.	Noida	DR			
		*				FESTO	Bangalore	DR			

NTPC	PROJECT : TELANGANA STPP (2 x 800 MW)	LIST OF ITEMS REQUIRING QP	REF. NO : 9591-101-2
	PACKAGE : Steam Generator (SG) PACKAGE	APPROVAL & ACCEPTABLE	REVISION NO : 00
	CONTRACTOR : BHEL - PEM, HYD, Trichy, PC, EDN, ISG	VENDOR AS APPROVED BY	DATE : 06/05/2015
	CONTRACT NO : 9591-101-2		

No.	Major Equipment	QP Inspection Category	QP No. 9582-001-QVI-Q	QP Submission SCH	QP Approval SCH	Proposed Sub Supplier	Country	SS Approval Status	SS Detail Sub.SCH	SS Approval SCH	Remark
33	Conduits lead coated (Flexible)	III				Plica	Ghaziabad	A			Main contractor can propose additional vendor for this item
		*				Bansal labortories	BHOPAL	DR			
34	Intelligent Battery charger 24V DC & DCDB /BHMS	II				Chabbi Electricals	Jalgaon	A			Modules from EMERSON
		II				Eltech	Gurgaon	A			Modules from ELTEK
		II				MasTech	Jalgaon	A			Modules from ELTEK
		II				Emerson	India	A			M/s BHEL will forward only two proposals after details review of NTPC Technical specification requirements.
		*				HBL Power Systems	India	DR			
		*				Dubas	India	DR			
		*				Chabbi Electricals (Chabbi Modules)	Jalgaon	DR			
		*				MasTech (Setek Modules)	Jalgaon	DR			
		*				Hitachi Hi Rel	Gandhinagar	DR			
		*				Statcon Power Controls Pvt. Ltd.	Noida	DR			
		*				Chloride Power Systems (caldyne)	India	DR			
		*				Amararaja	Tirupati	DR			
		*				Keltron Power Electronics	Trivendram	DR			
		*				Universal Instrument manufacturing co P Ltd	India	DR			
		*				Hind Rectifier Ltd	India	DR			
35	Battery Health Monitoring System	III				Emerson	Mumbai	A			
		III				Eltek SGS Pvt Ltd	Gurgaon	A			
		*				B Tech Inc	USA	DR			
		III				Hitachi Hi Rel	Gandhinagar	A			
		*				Hopeckee	Germany	DR			
		*				Hitachi Hi Rel	Gandhinagar	DR			
36	Battery(Ni-cd)	I				AMCO SAFT	Bangalore	A			
		II				SAFT	France/Sweeden	A			
		I				HBL POWER	Hyderabad	A			
		II				Hopekee	Germany	A			
37	Socket weld fittings	III				Main Contractor Approved Sources		NOTED			
38	Impulse pipe & tubes	II				Mahrashtra Seamless	Raigarh	A			Carbon steel only

NTPC	PROJECT : TELANGANA STPP (2 x 800 MW)	LIST OF ITEMS REQUIRING QP	REF. NO : 9591-101-2
	PACKAGE : Steam Generator (SG) PACKAGE	APPROVAL & ACCEPTABLE	REVISION NO : 00
	CONTRACTOR : BHEL - PEM, HYD, Trichy, PC, EDN, ISG	VENDOR AS APPROVED BY	DATE : 06/05/2015
	CONTRACT NO : 9591-101-2		

No.	Major Equipment	QP Inspection Category	QP No. 9582-001-QVI-Q	QP Submission SCH	QP Approval SCH	Proposed Sub Supplier	Country	SS Approval Status	SS Detail Sub.SCH	SS Approval SCH	Remark
		II				Sumitomo/kawasaki/Nippon	Japan	A			
		II				TPS TECHNITUBE	Germany	A			
		II				Veluric & manessmann	Germany	A			
		II				BHEL	Trichy	A			
		II				Trouvay and Cauvin	France	A			Makes shall be as per apprvoed list (Sr. No. 41)
		II				ISMT	Ahamadnagar	A			Carbon steel only.
		II				Sandvik		A			For SS only.
		*				TUBACES	Spain	DR			
		*				Salzgitter Mannesmann International	Germany	DR			
		*				Jindal saw	India	DR			
		II				Ratanamani Metal and Tubes	Ahamadabad	A			SS only
		II				Heavy metals and Tubes	Ahamadabad	A			SS and CS only.
		*				Shubhalaxmi Metal and Tubes	Mumbai	DR			
39	Compression fittings	III				Parker	USA	A			
		III				Precision	Mumbai	A			
		III				Astech	Mumbai	A			
		III				Fluid control Pvt. Ltd.	Pune	A			
		III				HP Valves and fittings	CHENNAI	A			Ferruleas are to be hardned at Exim Holand for pressure above 9000 psi.
		III				Excel hydro	Mumbai	A			Ferruleas are to be hardned at Exim Holand for pressure above 9000 psi.
		III				Swagelock	USA	A			
		III				Panam	Mumbai	A			
		*				Parker Hannifin India Pvt. Ltd.		DR			
		*				Prime Engineers		DR			
		*				Arya Craft		DR			
40	Instrument valves	III				BHEL	Trichy	A			
		II				Excel Hydro	Mumbai	A			
		II				Instrumentation Ltd.,	Palghat	A			
		III				Swagelok	USA	A			
		III				Parker	USA	A			
		II				HP Valves and fittings	CHENNAI	A			

NTPC	PROJECT : TELANGANA STPP (2 x 800 MW)	LIST OF ITEMS REQUIRING QP	REF. NO : 9591-101-2
	PACKAGE : Steam Generator (SG) PACKAGE	APPROVAL & ACCEPTABLE	REVISION NO : 00
	CONTRACTOR : BHEL - PEM, HYD, Trichy, PC, EDN, ISG	VENDOR AS APPROVED BY	DATE : 06/05/2015
	CONTRACT NO : 9591-101-2		

No.	Major Equipment	QP Inspection Category	QP No. 9582-001-QVI-Q	QP Submission SCH	QP Approval SCH	Proposed Sub Supplier	Country	SS Approval Status	SS Detail Sub.SCH	SS Approval SCH	Remark
		II				Fluid control Pvt. Ltd.	Pune	A			
		II				Baldota	Mumbai	A			
41	Valve manifolds	III				Excel hydro	Mumbai	A			
		III				SCHNEIDER	Germany	A			
		III				Anderson Greenwood	USA	A			
		III				Astech	Mumbai	A			
		III				HP Valves and fittings	CHENNAI	A			
		III				Fluid control Pvt. Ltd.	Pune	A			
		III				Microprecision	Faridabad	A			
		III				Parker	USA	A			
		III				Swagelock	USA	A			
		III				Baldota	Mumbai	A			
		*				Metpress Engg. works	Kolkata	DR			
42	Local Instrument Enclosure/Rack	I				Pyrotech	Udaipur	A			
		I				Instrumentation Limited	Kota	A			
		I				Sajas electrical	Trichurapalli	A			
		I				Prammen	Puddukottai	A			
		I				Chemin	Pondicherry	A			
		*				Forbes Marshall	Pune	DR			
		*				Positronics	Vadodara	DR			
		*				Procon	Chennai	DR			
43	Instrument Cables	I				Paramount	Khuskhera	A			PVC,FRLS type,RQP
		I				Polycab	Daman	A			PVC,FRLS type,RQP
		I				Delton	Faridabad	A			PVC,FRLS type,RQP
		I				KEI	Bhiwadi	A			PVC,FRLS type
		I				Elkey Telelinks	Faridabad	A			PVC,FRLS type
		I				CORDS	Chopanki	A			PVC,FRLS type,RQP
		I				CORDS	Kaharani	A			PVC,FRLS type,RQP
		I				Nicco	Kolkata	A			PVC,FRLS type
		II				TEW & C	USA	A			
		II				Habia cables	Sweeden	A			
		II				Kerpen cables	Germany	A			
		II				Lapp cables	Germany	A			
		II				Thermo elecrta Bv	Netherland	A			
		I				Universal Cable	Satna	A			PVC,FRLS type

NTPC	PROJECT : TELANGANA STPP (2 x 800 MW)	LIST OF ITEMS REQUIRING QP	REF. NO : 9591-101-2
	PACKAGE : Steam Generator (SG) PACKAGE	APPROVAL & ACCEPTABLE	REVISION NO : 00
	CONTRACTOR : BHEL - PEM, HYD, Trichy, PC, EDN, ISG	VENDOR AS APPROVED BY	DATE : 06/05/2015
	CONTRACT NO : 9591-101-2		

No.	Major Equipment	QP Inspection Category	QP No. 9582-001-QVI-Q	QP Submission SCH	QP Approval SCH	Proposed Sub Supplier	Country	SS Approval Status	SS Detail Sub.SCH	SS Approval SCH	Remark
		I				Thermocables	Hyderabad	A			
		I				Finolex Cable	Pune	DR *			
		I				Incab	Pune	DR *			
		I				Gupta Power Infrastructure Ltd.	Khurdha	A			
		*				Lapp cables	India	DR			M/s BHEL will forward only two proposals after details review of NTPC Technical specification requirements.
		*				Lioni cable	Pune	DR			
		*				RR Kabel	Silvasa	DR			
		*				Gemscab	Bhiwadi	DR			
		*				KEC International	Mysore	DR			
		*				Advance cable Technologies	Bangalore	DR			
		*				Suyog Electricals Ltd.	Vadodara	DR			
		*				Special Cable	India	DR			
		*				CMI	Faridabad	DR			
44	Electrical actuator	III				Auma	Germany	A			
		III				Limitorqe	USA	A			
		III				Rotorq	UK	A			
		II				Limitorque	Faridabad	A			
		II				Rotork	Chennai/ Bangalore	A			
		III				Nippon gear	Japan	A			
		II				Auma	Bangalore	A			
		III				Harold Beck	USA	A			
		III				Drehmo	Germany	A			
		*				Lindco	USA	DR			
		*				Siemens	Germany	DR			
45	Electrical actuator for ID/FD/PA Blade pitch and Guide vane control	III				Harold Beck	USA	A			
		III				SIPOS Aktrorik GmbH	Germany	A			
		*				ABB	Germany	DR			
46	Flow nozzle / Vernturi assembly	II				Mcroprecision	Faridabad	A			
		II				SEIKO	Austria	A			
		II				TECHNOMATIC	Italy	A			
		II				Instrumentation Limited	Palghat	A			
		II				Starmech	Pune	A			DR for P-91 Material
		II				WISE Control	Korea	A			

NTPC	PROJECT : TELANGANA STPP (2 x 800 MW)	LIST OF ITEMS REQUIRING QP	REF. NO : 9591-101-2
	PACKAGE : Steam Generator (SG) PACKAGE	APPROVAL & ACCEPTABLE	REVISION NO : 00
	CONTRACTOR : BHEL - PEM, HYD, Trichy, PC, EDN, ISG	VENDOR AS APPROVED BY	DATE : 06/05/2015
	CONTRACT NO : 9591-101-2		

No.	Major Equipment	QP Inspection Category	QP No. 9582-001-QVI-Q	QP Submission SCH	QP Approval SCH	Proposed Sub Supplier	Country	SS Approval Status	SS Detail Sub.SCH	SS Approval SCH	Remark
		*				IGEMA	Germany	DR			
54	Level switch - Float/Displacer Type	III				ENDRESS & HOUSER	AURANGABAD	A			
		III				MAGNETROL	BELGIUM	A			
		III				LEVCON	KOLKATA	A			
		III				SBEM	PUNE	A			
		III				Chemtrols samil	Mubmai	A			
		III				NAKATIYA	JAPAN	A			
		III				Sigma Industries	Mubmai	A			
		III				D K Instrument	KOLKATA	A			
		III				PUNE TECHTROL	PUNE	A			
		III				V AUTOMAT	NEW DELHI	A			
		*				WAREE	WAPI	DR			
		III				LEVELSTATE	UK	A			
		III				Gauges Bourdon (GIC)	Panvel	A			
55	Air filter regulator	III				Fairchild	USA	A			
		III				Shavo Norgen	Mumbai	A			
		III				SMC Pneumatics	NOIDA	A			
		III				Emerson (Asco)	Chennai	A			
		III				Festo	Bangalore	A			
		III				Placka	Chennai	A			
56	Copper tubing/Brass connectors	III				MAIN SUPPLIER APPROVED SOURCES		NOTED			
57	Coupling / Interposing relays	III				PARAMOUNT	BANGALORE	A			QP
		III				OMRON		A			
		III				OEN		A			
		III				Jyoti	Baroda	A			
		III				ELSTA	SWITZERLAND	A			
		*				Schneider	Germany	DR			
		*				Siemens	Germany	DR			
		*				Phoenix	Germany	DR			
		*				Finder		DR			
58	Solenoid valve	III				Rotex	Vadodara	A			
		III				Avcon	Mumabi	A			
		III				Herion	Germany	A			
		III				IMI NORGEN	GERMANY	A			

NTPC	PROJECT : TELANGANA STPP (2 x 800 MW)	LIST OF ITEMS REQUIRING QP	REF. NO : 9591-101-2
	PACKAGE : Steam Generator (SG) PACKAGE	APPROVAL & ACCEPTABLE	REVISION NO : 00
	CONTRACTOR : BHEL - PEM, HYD, Trichy, PC, EDN, ISG	VENDOR AS APPROVED BY	DATE : 06/05/2015
	CONTRACT NO : 9591-101-2		

No.	Major Equipment	QP Inspection Category	QP No. 9582-001-QVI-Q	QP Submission SCH	QP Approval SCH	Proposed Sub Supplier	Country	SS Approval Status	SS Detail Sub.SCH	SS Approval SCH	Remark
		III				A.N. Instruments	Kolakatta	A			
		III				NUOVA FIMA	ITALY	A			
		III				Goa Thermostatic	Goa	A			
		III				Goa Instrument Industries	Goa	A			
		III				Baumer	Vapi	A			
		III				Ashcroft	Gandhinagar	A			
		III				H Guru	Rishra/Muzaffarpu	A			
		III				Baumer	Vapi	A			
		III				Forbes Marshall	Hyderabad	A			M/s BHEL will forward only two proposals after details review of NTPC Technical specification requirements.
		III				Gauges Bourdon (GIC)	Panvel	A			
		*				Konics	Korea	DR			
		*				Pyroelectric	GOA	DR			
		*				Winters Gauge	USA	DR			
		*				Walchandnagar Industries Ltd.	Dharwad	DR			
		*				Nesstech	Vapi	DR			
		*				US Gauge	USA	DR			
63	Furniture for computer	III				OTS office tech.	India	NOTED			
	{Chair, Almirah, Lock etc.}	III				Godrej boyce		NOTED			
		III				Fetherlite		NOTED			
		III				PAN Office		NOTED			
		III				Pyrotech		NOTED			
64	Terminal Block (Cage and Clamp type)	III				Weidmuller	Germany	A			
		III				Phoenix	Germany / India	A			
		III				Wago	Germany / India	A			
		III				Elmex	Vadodara	A			CE Mark only
65	FRP Junction Box					**Refer Electrical List**					
66	PLC System (If applicable)	I				GE Intellegent plateforms	Bangalore	A			
		I				ABB	Bangalore	A			
		I				Schneider	Nasik	A			
		I				Rockwell	Sahibabad	A			
		I				Siemens	Nasik	A			
		I				HONEYWELL	Pune	A			
67	SMART POSITIONER	#				ABB		N			# - To be covered in Control Valve QP.
		#				Masolenien		N			

NTPC	PROJECT : TELANGANA STPP (2 x 800 MW)	LIST OF ITEMS REQUIRING QP	REF. NO : 9591-101-2
	PACKAGE : Steam Generator (SG) PACKAGE	APPROVAL & ACCEPTABLE	REVISION NO : 00
	CONTRACTOR : BHEL - PEM, HYD, Trichy, PC, EDN, ISG	VENDOR AS APPROVED BY	DATE : 06/05/2015
	CONTRACT NO : 9591-101-2		

No.	Major Equipment	QP Inspection Category	QP No. 9582-001-QVI-Q	QP Submission SCH	QP Approval SCH	Proposed Sub Supplier	Country	SS Approval Status	SS Detail Sub.SCH	SS Approval SCH	Remark
		*				BHEL		DR			

LEGENDS :

1.0 SYSTEM SUPPLIER / SUB SUPPLIER APPROVAL STATUS CATEGORY (SHALL BE FILLED BY NTPC)

A - For those items proposed vendor is acceptable to NTPC, subject to meeting the NTPC Specificaiton requirement. To be indicated with letter "A" in the list alognwith the condition of approval, if any.

DR - For those items "Detailed Required" for NTPC review. To be identified with letter "DR" in the list.

DR* - For those item "Detail Required by NTPC for record updation only

NOTED : For these items vendors are approved by Main Suppleir and accepted by NTPC without specific vendor approval from NTPC. To be identified with "NOTED"

2.0 QP INSPECTION CATEGORY :

CAT - I : For those items the Quality Plans are approved by NTPC and final acceptance will be on physical inspection witness by NTPC

CAT - II : For those items the Quality Plans are approved by NTPC. However no physical inspection shall be done by NTPC. The final acceptance by NTPC shall be on the basis of review of documents.

UNITS/WORKS : Place of manufacturing- Place of main supplier of multi units/works.

*** - Inspection category will be decided during vendor evaluation.**

NOTE - 1 : EMPTY CABINETS, COMPUTERS, SIGNAL ISOLATOR/ MULTIPLIER, MCB, TB, POWER SUPPLY ETC. SHALL ALSO BE ACCEPTABLE FROM INDEGENEOUS SOURCES AGREED BY NTPC IN QP. IF THE TOTAL INTEGRATED PANEL AND FAT IS CONDUCTED INDEGENEOUSLY ITEM TO BE TREATED AS CAT - I.

NOTE - 2 : NIL

NOTE - 3 : For the items not appearing in the preaward list, bidder and NTPC will mutually discussed in future.

NOTE - 4 : The items which are appearing under Schedule - I (To be supplied from overseas vendor), for those items, Indegeneous approved vendors stands cancelled / Withdrawn.

NOTE - 5 : For Imported Items like Skid mount, FAN, Motor, Pump etc., specific instruments shall be supplied as per OEM standard practice / approved sources.

FORMAT NO. : QS-01-QAI-P-1/F3-R0 Engg. Div/QA&I

Sl No	Package Name	Supplier Name	Supplier Communication Address	Tech Limit	Fin Limit
1	PRESSURE SWITCH/DIFF. PRESSURE SWITCH	DRESSER INDUSTRIES INC.	Mr. Nishit Patel/Mr. Anuj Verma Plot No.2306, Phase II, GIDC Chhatral Kalol Phone- 02764-233682 Pincode : 382729 Email : Nishit.patel@ashcroftindia.com		
2	PRESSURE SWITCH/DIFF. PRESSURE SWITCH	Barksdale GmbH, Germany	Michael Weileder Dorn Assenheimer, Strasse 27 Reichelsheim Phone- +91-9999107840 Pincode : D-61203 Email : msingh@barksdale.de		
3	PRESSURE SWITCH/DIFF. PRESSURE SWITCH	SWITZER PROCESS INSTRUMENTS PVT. LTD.	Mr. V S Jayaprakash, No.127 & 128, SIDCO North Phase, Ambattur Estates CHENNAI Phone- 044-26252017/2018 Pincode : 600050 Email : marketing@switzerinstrument.com		
4	PRESSURE SWITCH/DIFF. PRESSURE SWITCH	PRECISION MASS PRODUCTS PVT. LTD.	Mr. Nishit Patel/Mr. Anuj Verma Plot No.2306, Phase II, GIDC Chhatral Kalol Phone- 9999464663 Pincode : 382729 Email : sales@precisionmass.com		
5	PRESSURE SWITCH/DIFF. PRESSURE SWITCH	INDFOS INDUSTRIES LIMITED	B-20-21, INDUSTRIAL AREA, MEERUT ROAD, GHAZIABAD Phone- 0120-2712016 Pincode : Email : mktg@indfos.com		
6	PRESSURE SWITCH/DIFF. PRESSURE SWITCH	SOR INC.	LARRY DEGARMO/Avdhesh Chandra, 14685 W. 105TH STREET LENEXA Phone- 09810905139, Pincode : 66215 Email : Ldegarmo@sorinc.com, avdhesh@sherman-india.com,		
7	PRESSURE SWITCH/DIFF. PRESSURE SWITCH	GENERAL INSTRUMENTS CONSORTIUM	Mr. Amarendra Kulkarni 194/195, Gopi Tank Road, Off. Pandurang Naik Marg, Mahim Mumbai Phone- 9323195251 Pincode : 400016 Email : amarendra@general-gauges.com		
8	PRESSURE SWITCH/DIFF. PRESSURE SWITCH	INDFOS (INDIA) LIMITED	MR.L.C.VENKATRANGAN/MR.B.KANNAN New No.17, II Floor, Adwave Towers, Dr.Sevalia Shivaji Salai, T.Nagar Chennai Phone- +91 44 24353407 Pincode : 600017 Email : delhi@indfos.com		
9	PRESSURE SWITCH/DIFF. PRESSURE SWITCH	Kaustubha Udyog,	S.No. 36/1/1, Sinhgad Road, Vadgaon Khurd, Near Lokmat Press, Pune, Phone- 020-24393577, Pincode : Email : pressure@vsnl.com,		
10	PRESSURE GAUGE/ DIFF.PRESSURE GAUGE	BOSE PANDA INSTRUMENTS PVT.LTD.	Mr. Partha Bose 44, Saheed Hemanta Kumar Bose, Sarani, Kolkata Phone- +91 33 2548 7220 Pincode : 700074 Email : parthabosebpi@gmail.com; bosepanda@vsnl.net		
11	PRESSURE GAUGE/ DIFF.PRESSURE GAUGE	A.N. INSTRUMENTS PVT. LTD.	MARKETING DIVISION, 5th FLOOR, 59-B, CHOWRINGHEE ROAD, KOLKATA Phone- 24757784,22472509 Pincode : 700020 Email : anidel@bol.net.in		
12	PRESSURE GAUGE/ DIFF.PRESSURE GAUGE	PRECISION MASS PRODUCTS PVT. LTD.	Mr. Nishit Patel/Mr. Anuj Verma Plot No.2306, Phase II, GIDC Chhatral Kalol Phone- 9999464663 Pincode : 382729 Email : sales@precisionmass.com		
13	PRESSURE GAUGE/ DIFF.PRESSURE GAUGE	Baumer Technologies India Pvt. Ltd.	Mr. Shyam Warilani/Mr. V Suresh Babu 36, DAMJI SHAMJI INDUSTRIAL COMPLEX, OFF.-MAHAKALI CAVES ROAD, ANDHERI(E) MUMBAI Phone- +91 99589 25151 Pincode : 400093 Email : sales.in@baumer.com		
14	PRESSURE GAUGE/ DIFF.PRESSURE GAUGE	H.GURU INSTRUMENTS (SOUTH INDIA) P. LTD	32,INDUSTRIAL SUBURB YESWANTHAPUR BANGALORE Phone- 080-23370300, Pincode : 560022 Email : info@hgurusouth.com		
15	PRESSURE GAUGE/ DIFF.PRESSURE GAUGE	FORBES MARSHALL (HYD) LTD.	MR SAILESH PATALAY/MR. M K SRINIVASAN PLOT NO.A-19/2, & T-4/2, IDA, NACHARAM, HYDERABAD Phone- 9849913704 Pincode : 500 076 Email : mksrinivasan@forbesmarshall.com		
16	PRESSURE GAUGE/ DIFF.PRESSURE GAUGE	H.GURU INDUSTRIES	Mr. G. D. Hazra/Mr. P. K. Mitra 10 B, HO-CHI-MINH SARANI, KOLKATA Phone- 033 2282 2463 / 1637 Pincode : 700071 Email : mguru@vsnl.net		OVERALL PENDING ORDER VALUE (EXCLUDING VALUE OF ORDERS ALREADY EXECUTED) FOR ALL PACKAGES FOR WHICH VENDOR IS REGISTERED SHALL NOT EXCEED RS. 1.0 CRORE
17	PRESSURE GAUGE/ DIFF.PRESSURE GAUGE	GAUGE BOURDON INDIA PVT. LTD.	194/195, Gopi Tank Road, Off Pandurang Naik Marg, Mahim Mumbai, Phone- 011-41607463, Pincode : 400016, Email : gicdelhi@general-gauges.com,		
18	PRESSURE GAUGE/ DIFF.PRESSURE GAUGE	Nesstech Instruments Private Limited	26/2, G Type, Global Industrial Park Near Nahuli Railway Crossing, Valvada Vapi Phone- 9920576002 Pincode : 396105 Email : sales@nesstech.co.in		
19	TEMPERATURE GAUGE	FORBES MARSHALL (HYD) LTD.	MR SAILESH PATALAY/MR. M K SRINIVASAN PLOT NO.A-19/2, & T-4/2, IDA, NACHARAM, HYDERABAD Phone- 9849913704 Pincode : 500 076 Email : mksrinivasan@forbesmarshall.com		
20	TEMPERATURE GAUGE	GOA INSTRUMENTS INDUSTRIES PVT.LTD.,	D2/5, Mapusa Industrial Estate, Mapusa, Goa, Phone- 09326054551, Pincode : 403507, Email : sumukh@goainstruments.com,		

21	TEMPERATURE GAUGE	H.GURU INSTRUMENTS (SOUTH INDIA) P. LTD	32,INDUSTRIAL SUBURB YESWANTHAPUR BANGALORE Phone- 080-23370300, Pincode : 560022 Email : info@hgurusouth.com		
22	TEMPERATURE GAUGE	GAUGE BOURDON INDIA PVT. LTD.	194/195, Gopi Tank Road, Off Pandurang Naik Marg, Mahim Mumbai, Phone- 011-41607463, Pincode : 400016, Email : gicdelhi@general-gauges.com,		
23	TEMPERATURE GAUGE	H.GURU INDUSTRIES	Mr. G. D. Hazra/Mr. P. K. Mitra 10 B, HO-CHI-MINH SARANI, KOLKATA Phone- 033 2282 2463 / 1637 Pincode : 700071 Email : mguru@vsnl.net		OVERALL PENDING ORDER VALUE (EXCLUDING VALUE OF ORDERS ALREADY EXECUTED) FOR ALL PACKAGES FOR WHICH VENDOR IS REGISTERED SHALL NOT EXCEED RS. 1.0 CRORE
24	TEMPERATURE GAUGE	GOA THERMOSTATIC INSTRUMENTS PVT.LTD.	FLAT -B , GF, HILL CROWN APTS., COLLEGE ROAD, MAPUSA Phone- Pincode : 403525 Email : gtilworks@pyro-electric.in		
25	TEMPERATURE GAUGE	A.N. INSTRUMENTS PVT. LTD.	MARKETING DIVISION, 5th FLOOR, 59-B, CHOWRINGHEE ROAD, KOLKATA Phone- 24757784,22472509 Pincode : 700020 Email : anidel@bol.net.in		
26	TEMPERATURE GAUGE	Baumer Technologies India Pvt. Ltd.	Mr. Shyam Warilani/Mr. V Suresh Babu 36, DAMJI SHAMJI INDUSTRIAL COMPLEX, OFF.-MAHAKALI CAVES ROAD, ANDHERI(E) MUMBAI Phone- +91 99589 25151 Pincode : 400093 Email : sales.in@baumer.com		
27	TEMPERATURE GAUGE	PRECISION MASS PRODUCTS PVT. LTD.	Mr. Nishit Patel/Mr. Anuj Verma Plot No.2306, Phase II, GIDC Chhatral Kalol Phone- 9999464663 Pincode : 382729 Email : sales@precisionmass.com		
28	LEVEL GAUGE	BLISS ANAND PVT. LTD.	Mr. Vikas Anand/ Mr.RGRajan 92B & 93 B , IMT MANESAR Gurgaon Phone- 0124-4366000 TO 9 Pincode : 122001 Email : sales@blissanand.com		
29	LEVEL GAUGE	TOSHNIWAL BROTHERS PVT.LTD.	WORKS:TOSHNIWAL IND.PVT.LTD, INDUSTRIAL ESTATE MAKHUPURA, AJMER Phone- 441171 Pincode : 305002 Email : toshniwalprocess@gmail.com	MAKE:NIVO CONTROLS	
30	LEVEL GAUGE	SIGMA INSTRUMENTS CO.	Gopal Kannan/R Gopinath 201, ANANDRAJ INDUSTRIAL ESTATE, OFF.LBS MARG, SONAPUR LANE, BHANDUP (W) MUMBAI Phone- +919821038162 Pincode : 400078 Email : sales@sigmainstruments.co.in		
31	TRANSMITTERS	V. AUTOMAT & INTRUMENTS (P) LTD.	Mr. R. K. BASSI/Mr. PRAVEEN KUMAR F-61, OKHLA INDL.AREA, PH-1 NEW DELHI Phone- 9810005826 Pincode : 110 020 Email : sales@vautomat.com	a)DISPLACEMENT TYPE TRANSMITTERS. b)PRESSURE AND DP TRANSMITTERS	
32	TRANSMITTERS	ABB LIMITED	MR. RAJIV GOVIL 14, MATHURA ROAD, FARIDABAD Phone- 09971085678 Pincode : 121003 Email : vipin.swami@in.abb.com	PRESSURE TRANSMITTER, DP TRANSMITTER and TEMP TRANSMITTER	
33	TRANSMITTERS	Pune Techtrol Pvt. Ltd.	N.P.Khatan/Sudhakar Badiger S-18, MIDC Bhosari, Pune Phone- 9850560042 Pincode : 411 026 Email : ho@punetechtrol.com	Only for capacitance Type Level Transmitter	
34	TRANSMITTERS	YOKOGAWA INDIA LIMITED,	PLOT NO.96, ELECTRONICS CITY COMPLEX, HOSUR ROAD, BANGALORE, Phone- 080-41586000, Pincode : Email : uday.shankar@in.yokogawa.com,		
35	TRANSMITTERS	Moore Industries International Inc.	Leonard.W. Moore/ Matt Moren 16650 Schoenborn St. North Hills Phone- +1 818 830 5548 Pincode : 91343 Email : mmoren@miinet.com		
36	TRANSMITTERS	PANAM ENGINEERS	Mr. Santosh Shukla 203, Jaisingh Business,Parsiwada, Sahar road,Andheri(East), Mumbai, Phone- 9892179529, Pincode : 400099, Email : santosh@panamengineers.com,	For Pressure and Diff. Pressure transmitter	
37	TRANSMITTERS	TOSHNIWAL INDUSTRIES PVT. LTD.,	Industrial Estate, Makhupura, Ajmer, Phone- 9352009000, Pincode : 305002, Email : info@tipl.com,		
38	TRANSMITTERS	Endress + Hauser (India) Pvt. Ltd.,	Mr. Prakash Vaghela 215-216, DLF Tower 'A', Jasola District Centre, New Delhi, Phone- 9717593001, Pincode : 110025, Email : prakash.vaghela@in.endress.com,		
39	TRANSMITTERS	SBEM PVT. LTD.	MR.N.K. BEDARKAR/MR. VISHWANATH KARANDIK 39, ELECTRONIC CO.OP. ESTATE, PUNE SATARA ROAD PUNE, Phone- 912041030100 Pincode : 411009 Email : newdelhi@sbem.co.in	FOR CAPACITANCE TYPE.	
40	TRANSMITTERS	SIEMENS LIMITED	Dr. Armin Bruck/Sandeep Mathur 130, Pandurang Budhkar Marg Worli Mumbai Phone- 0124 383 7377 Pincode : 400018 Email : ankit.varshney@siemens.com		
41	TRANSMITTERS	EMERSON PROCESS MANAGEMENT (INDIA) PVT.LTD.	Mr. Amit Paithankar/Vikram Raj Singh 206-210,BALARAMA BUILDING 2ND FLR. BANDRA EAST MUMBAI Phone- 9619121500 Pincode : 400051 Email : vikramraj.singh@emerson.com		
42	TRANSMITTERS	NIVO CONTROLS PVT. LTD.	Mr. Praveen Toshniwal 104-115, Electronic Complex, Indore Phone- 0731-4081305 Pincode : 452010 Email : sales@nivocontrols.com	For Capacitance type only	

43	TRANSMITTERS	SMART INSTRUMENTS LTD, BRAZIL	Agents: Digital Electronic Ltd. 74/11 'C' Cross Road MIDC Andheri (East) MUMBAI Phone- 28208477 Pincode : 400093 Email : corp@delbby.rpgms.ems.vsnl.net.in	LD-301 & T-301 TRANSMITTER FROM M/S SMART EQUIPMENTS BRAZIL.	
44	TRANSMITTERS	Honeywell Automation India Limited	Mr. Ritwij Kulkarni 917, INTERNATIONAL TRADE TOWER, NEHRU PLACE, NEW DELHI Phone- 9890200584 Pincode : 110019 Email : rajesh.chaudhary@honeywell.com		
45	JUNCTION BOX	Shrenik & Company,	Mr. Mitesh Shah/Mr. Pulin Shah 39 A/3 ,Panchratna Industrial Estate, Sarkhej-Bavla Road Ahmedabad Phone- 9825024921 Pincode : 382213 Email : sales@pustron.com, pulin@sumip.com		
46	JUNCTION BOX	SUCHITRA INDUSTRIES	NO-2,OPP-27 AECS LAYOUT 2ND STG REJAMAHALVILAS EXTN 2ND STG BANGALORE Phone- Pincode : Email : suchitra.industriesblr@gmail.com		
47	JUNCTION BOX	FLEXPRO ELECTRICALS PVT. LTD.	Mr. Dineshbhai Zaveri C-1/ 27&37, GIDC, Kabilpore, Navsari Phone- 02637-265140,265003 Pincode : 396424 Email : flexpro@flexproltd.com	Metal type junction box only	
48	JUNCTION BOX	K.S.INSTRUMENTS PVT.LTD.	S Raghavan No. 72, 3rd Main, 1st Stage Industrial Suburb, Yeshwanthpur Bangalore Phone- 9880385770 Pincode : 560022 Email : sales1@ksinstruments.net		
49	JUNCTION BOX	AJMERA INDUSTRIAL & ENGINEERING WORKS	JIGNESH MAHENDRA AJMERA DENA BANK BLDG.,SHREE NAGESH INDL. ESTATE,STATION ROAD, MUMBAI Phone- 022 67973578 Pincode : 400 088 Email : ajmera@ajmera.net, jmajmera@yahoo.com		
50	INSTRUMENTS TUBE FITTINGS	VIKAS INDUSTRIAL PRODUCTS	S.R.SINGH/NAVEEN SINGH B - 2, SECTOR - 6, NOIDA Phone- +91-9810122070 Pincode : 201301 Email : naveensingh@vsnl.com		Over all financial limit for ordering as Rs.30 lacs (Rs.Thirty Lacs). The registration category & the financial limit may be reviewed after survey in March 2009 and approval thereof. Registered w.e.f. 22.01.2009
51	INSTRUMENTS TUBE FITTINGS	Fluid Controls Pvt. Ltd.	Sophie Y. Moochhala/Mayur Rajput J.V.PATEL, I.T.I CMPD, B.MADHUKAR MARG, ELPHINSTONE ROADSTN.(WR), MUMBAI Phone- (022) 43338000 Pincode : 400013 Email : sales@fluidcontrols.com		
52	INSTRUMENTS TUBE FITTINGS	PRECISION ENGINEERING INDUSTRIES	K. SITARAM/ K. SRINIVAS 7,SIDHAPURA INDUSTRIAL ESTATE S.V. ROAD,GOREGAON(W) MUMBAI Phone- 022 42631700 Pincode : 400 062 Email : peiks@vsnl.com		
53	INSTRUMENTS TUBE FITTINGS	AURA INCORPORATED	NIRAJ SHARAN/SUJIT KUMAR W-167A, GREATER KAILASH-II NEW DELHI Phone- 9810182430 Pincode : 110048 Email : niraj@aurainc.com		
54	LEVEL SWITCH-CAPACITANCE TYPE	SIGMA INSTRUMENTS CO.	Gopal Kannan/R Gopinath 201, ANANDRAJ INDUSTRIAL ESTATE, OFF.LBS MARG, SONAPUR LANE, BHANDUP (W) MUMBAI Phone- +919821038162 Pincode : 400078 Email : sales@sigmainstruments.co.in		
55	LEVEL SWITCH-CAPACITANCE TYPE	Sapcon Instrument Pvt Ltd.	131, PALSHIKAR COLONY Contact Person- Mr. Ashwin (9826080207) INDORE Phone- +91-731-4085751, Pincode : 452004 Email : sales@sapconinstruments.com		
56	LEVEL SWITCH-CAPACITANCE TYPE	V. AUTOMAT & INTRUMENTS (P) LTD.	Mr. R. K. BASSI/Mr. PRAVEEN KUMAR F-61, OKHLA INDL.AREA, PH-1 NEW DELHI Phone- 9810005826 Pincode : 110 020 Email : sales@vautomat.com		
57	LEVEL SWITCH-CAPACITANCE TYPE	Flow Star Engineering Pvt. Ltd.,	MR. KHALID AKHTAR/MR. TAPAN KUMAR JANA Plot No-7 F/2, Northern India Industrial 20/3, Mathura Road FARIDABAD Phone- 9818176380 Pincode : 121005 Email : khalid@flowstar.co.in		
58	LEVEL SWITCH-CAPACITANCE TYPE	Baumer Technologies India Pvt. Ltd.	Mr. Shyam Warilani/Mr. V Suresh Babu 36, DAMJI SHAMJI INDUSTRIAL COMPLEX, OFF.-MAHAKALI CAVES ROAD, ANDHERI(E) MUMBAI Phone- +91 99589 25151 Pincode : 400093 Email : sales.in@baumer.com		
59	LEVEL SWITCH-CAPACITANCE TYPE	NIVO CONTROLS PVT. LTD.	MR.PRAVEEN TOSHNIWAL/MR. NITIN TAMHANE 104-115, ELECTRONIC COMPLEX, INDORE Phone- 07314081300 Pincode : 452010 Email : sales@nivocontrols.com	For Capacitance type level switch.	
60	LEVEL SWITCH-CAPACITANCE TYPE	BLISS ANAND PVT. LTD.	Mr. Vikas Anand/ Mr.RGRajan 92B & 93 B , IMT MANESAR Gurgaon Phone- 0124-4366000 TO 9 Pincode : 122001 Email : sales@blissanand.com		
61	LEVEL SWITCH-CAPACITANCE TYPE	Pune Techtrol Pvt. Ltd.	N.P.Khatan/Sudhakar Badiger S-18, MIDC Bhosari, Pune Phone- 9850560042 Pincode : 411 026 Email : ho@punetechtrol.com		
62	LEVEL SWITCH-CAPACITANCE TYPE	SOR INC.	LARRY DEGARMO/Avdhesh Chandra, 14685 W. 105TH STREET LENEXA Phone- 09810905139, Pincode : 66215 Email : Ldegarmo@sorinc.com, avdhesh@sherman-india.com,		
63	LEVEL SWITCH-CAPACITANCE TYPE	LEVCON INSTRUMENTS PVT. LTD.	Mr Shayak Gupta/Badal Jana Rajkamal', 7th floor, 13, Camac Street KOLKATA Phone- 0 33 2283 2766 Pincode : 700017 Email : b_jana@levcongroup.com		
64	LEVEL SWITCH-CONDUTIVITY TYPE	SOR INC.	LARRY DEGARMO/Avdhesh Chandra, 14685 W. 105TH STREET LENEXA Phone- 09810905139, Pincode : 66215 Email : Ldegarmo@sorinc.com, avdhesh@sherman-india.com,		

65	LEVEL SWITCH-CONDUTIVITY TYPE	LEVCON INSTRUMENTS PVT. LTD.	Mr Shayak Gupta/Badal Jana Rajkamal', 7th floor, 13, Camac Street KOLKATA Phone- 0 33 2283 2766 Pincode : 700017 Email : b_jana@levcongroup.com		
66	LEVEL SWITCH-CONDUTIVITY TYPE	V. AUTOMAT & INTRUMENTS (P) LTD.	Mr. R. K. BASSI/Mr. PRAVEEN KUMAR F-61, OKHLA INDL.AREA, PH-1 NEW DELHI Phone- 9810005826 Pincode : 110 020 Email : sales@vautomat.com		
67	LEVEL SWITCH-CONDUTIVITY TYPE	HI-TECH SYSTEMS & SERVICES LTD.	Mr. Vikash Agrawal/Mr. Tarun Debnath 119, PARK STREET , KOLKATA Phone- 033-22290045 Pincode : 700016 Email : sandeep@hitech.in	Vendor shall source import contents of Level Switch (Conductivity Type) from Levelstate Systems Ltd., United Kingdom	
68	LEVEL SWITCH-CONDUTIVITY TYPE	RAMAN INSTRUMENTS PVT.LTD.	Mr. N R Shenoy/Mr G B Vijh 8, First Floor.Plot : 160A Bait-Ush-Sharaf, 29th Road,Bandra(W) MUMBAI Phone- 09892331381 Pincode : 400050 Email : ramanbpl@vsnl.com	Vendor shall source import contents of Level Switch (Conductivity Type) from Mobrey Measurement, an operating unit of Morbey Ltd	
69	LEVEL SWITCH-CONDUTIVITY TYPE	BLISS ANAND PVT. LTD.	Mr. Vikas Anand/ Mr.RGRajan 92B & 93 B , IMT MANESAR Gurgaon Phone- 0124-4366000 TO 9 Pincode : 122001 Email : sales@blissanand.com		
70	LEVEL SWITCH-CONDUTIVITY TYPE	Sapcon Instrument Pvt Ltd.	131, PALSHIKAR COLONY Contact Person- Mr. Ashwin (9826080207) INDORE Phone- +91-731-4085751, Pincode : 452004 Email : sales@sapconinstruments.com		
71	LEVEL SWITCH-CONDUTIVITY TYPE	SIGMA INSTRUMENTS CO.	Gopal Kannan/R Gopinath 201, ANANDRAJ INDUSTRIAL ESTATE, OFF.LBS MARG, SONAPUR LANE, BHANDUP (W) MUMBAI Phone- +919821038162 Pincode : 400078 Email : sales@sigmainstruments.co.in		
72	LEVEL SWITCH-FLOAT TYPE	SIGMA INSTRUMENTS CO.	Gopal Kannan/R Gopinath 201, ANANDRAJ INDUSTRIAL ESTATE, OFF.LBS MARG, SONAPUR LANE, BHANDUP (W) MUMBAI Phone- +919821038162 Pincode : 400078 Email : sales@sigmainstruments.co.in		
73	LEVEL SWITCH-FLOAT TYPE	Pune Techtrol Pvt. Ltd.	N.P.Khatan/Sudhakar Badiger S-18, MIDC Bhosari, Pune Phone- 9850560042 Pincode : 411 026 Email : ho@punetechtrol.com		
74	LEVEL SWITCH-FLOAT TYPE	D.K. INSTRUMENTS PVT.LTD.	N.SIKDAR/ SUMIT SIKDAR 76/2,SELIMPUR RD DHAKURIA Kolkata Phone- 033-2415-1310. Pincode : 700031 Email : dkinst@vsnl.net		
75	LEVEL SWITCH-FLOAT TYPE	V. AUTOMAT & INTRUMENTS (P) LTD.	Mr. R. K. BASSI/Mr. PRAVEEN KUMAR F-61, OKHLA INDL.AREA, PH-1 NEW DELHI Phone- 9810005826 Pincode : 110 020 Email : sales@vautomat.com		
76	LEVEL SWITCH-FLOAT TYPE	LEVCON INSTRUMENTS PVT. LTD.	Mr Shayak Gupta/Badal Jana Rajkamal', 7th floor, 13, Camac Street KOLKATA Phone- 0 33 2283 2766 Pincode : 700017 Email : b_jana@levcongroup.com		
77	LEVEL SWITCH-FLOAT TYPE	GENERAL INSTRUMENTS CONSORTIUM	Mr. Amarendra Kulkarni 194/195, Gopi Tank Road, Off. Pandurang Naik Marg, Mahim Mumbai Phone- 9323195251 Pincode : 400016 Email : amarendra@general-gauges.com		
78	LEVEL SWITCH-FLOAT TYPE	Baumer Technologies India Pvt. Ltd.	Mr. Shyam Warilani/Mr. V Suresh Babu 36, DAMJI SHAMJI INDUSTRIAL COMPLEX, OFF.-MAHAKALI CAVES ROAD, ANDHERI(E) MUMBAI Phone- +91 99589 25151 Pincode : 400093 Email : sales.in@baumer.com		
79	LEVEL SWITCH-FLOAT TYPE	SBEM PVT. LTD.	MR.N.K. BEDARKAR/MR. VISHWANATH KARANDIK 39, ELECTRONIC CO.OP. ESTATE, PUNE SATARA ROAD PUNE, Phone- 912041030100 Pincode : 411009 Email : newdelhi@sbem.co.in		
80	LEVEL SWITCH-FLOAT TYPE	SOR INC.	LARRY DEGARMO/Avdhesh Chandra, 14685 W. 105TH STREET LENEXA Phone- 09810905139, Pincode : 66215 Email : Ldegarmo@sorinc.com, avdhesh@sherman-india.com,		
81	LEVEL SWITCH-FLOAT TYPE	BLISS ANAND PVT. LTD.	Mr. Vikas Anand/ Mr.RGRajan 92B & 93 B , IMT MANESAR Gurgaon Phone- 0124-4366000 TO 9 Pincode : 122001 Email : sales@blissanand.com		
82	INSTRUMENTS PIPE FITTINGS	VIKAS INDUSTRIAL PRODUCTS	S.R.SINGH/NAVEEN SINGH B - 2, SECTOR - 6, NOIDA Phone- +91-9810122070 Pincode : 201301 Email : naveensingh@vsnl.com		Over all financial limit for ordering as Rs.30 lacs (Rs.Thirty Lacs).
83	INSTRUMENTS PIPE FITTINGS	Fluid Controls Pvt. Ltd.	Sophie Y. Moochhala/Mayur Rajput J.V.PATEL, I.T.I CMPD, B.MADHUKAR MARG, ELPHINSTONE ROADSTN.(WR), MUMBAI Phone- (022) 43338000 Pincode : 400013 Email : sales@fluidcontrols.com		
84	INSTRUMENTS PIPE FITTINGS	AURA INCORPORATED	NIRAJ SHARAN/SUJIT KUMAR W-167A, GREATER KAILASH-II NEW DELHI Phone- 9810182430 Pincode : 110048 Email : niraj@aurainc.com		
85	INSTRUMENTS PIPE FITTINGS	PRECISION ENGINEERING INDUSTRIES	K. SITARAM/ K. SRINIVAS 7,SIDHAPURA INDUSTRIAL ESTATE S.V. ROAD,GOREGAON(W) MUMBAI Phone- 022 42631700 Pincode : 400 062 Email : peiks@vsnl.com		
86	INSTRUMENT FITTINGS	PRECISION ENGINEERING INDUSTRIES	K. SITARAM/ K. SRINIVAS 7,SIDHAPURA INDUSTRIAL ESTATE S.V. ROAD,GOREGAON(W) MUMBAI Phone- 022 42631700 Pincode : 400 062 Email : peiks@vsnl.com		

87	INSTRUMENT FITTINGS	AURA INCORPORATED	NIRAJ SHARAN/SUJIT KUMAR W-167A, GREATER KAILASH-II NEW DELHI Phone- 9810182430 Pincode : 110048 Email : niraj@aurainc.com		
88	INSTRUMENT FITTINGS	HP VALVES & FITTINGS INDIA PVT. LTD.	S. Harichandran/P.S. Pandi B-11, Mugappair Industrial Estate, CHENNAI Phone- 044 26252537 Pincode : 600037 Email : sales@hpvalvesindia.com		
89	INSTRUMENT FITTINGS	Comfit & Valve Pvt. Ltd.	Mr. Jeetu Jain/Mr. Vinay Sosa Survey No. 23/1, Part 2, Ahmedabad-Mehsana Highway Laxmipura, Nandasan Phone- 02764-267036/37 Pincode : 382705 Email : marketing@com-fit.com		
90	INSTRUMENT FITTINGS	Perfect Instrumentation Control (India) Pvt. Ltd.	MD Hussain Shaikh/Shahanawaz Khan Gala No. 168, Loheki Chwal,216/ 218, Maulana Azad Rd. Nagpada Junction Mumbai Phone- 91-9324383121 Pincode : 400008 Email : shahanawaz.khan@perfectinstrumentation.com		
91	INSTRUMENT FITTINGS	Arya Crafts & Engineering Pvt. Ltd.	Mr.Sanjay Brahman/Mr.Shyam Vazirani 102, Vora Industrial Estate No.4 Navghar, Vasai Road (E) Dist.Thane, Mumbai Phone- +91-250-2392246 Pincode : 401210 Email : arya@aryaengg.com		
92	INSTRUMENT FITTINGS	FLUIDFIT ENGINEERS PVT. LTD.	Mr. Abbas Bhola Potia Building No. 2, Office No. 3,292, Bellasis Road,Mumbai Central (East) Mumbai Phone- 9920044113 Pincode : 400008 Email : ab@fluidfitengg.com		
93	INSTRUMENT FITTINGS	VIKAS INDUSTRIAL PRODUCTS	S.R.SINGH/NAVEEN SINGH B - 2, SECTOR - 6, NOIDA Phone- +91-9810122070 Pincode : 201301 Email : naveensingh@vsnl.com		Over all financial limit for ordering as Rs.30 lacs (Rs.Thirty Lacs).
94	INSTRUMENT FITTINGS	Fluid Controls Pvt. Ltd.	Sophie Y. Moochhala/Mayur Rajput J.V.PATEL, I.T.I CMPD, B.MADHUKAR MARG, ELPHINSTONE ROADSTN.(WR), MUMBAI Phone- (022) 43338000 Pincode : 400013 Email : sales@fluidcontrols.com		
95	INSTRUMENT FITTINGS	PANAM ENGINEERS	Mr. Santosh Shukla 203, Jaisingh Business,Parsiwada, Sahar road,Andheri(East), Mumbai, Phone- 9892179529, Pincode : 400099, Email : santosh@panamengineers.com,		

Notes:

i) The above sub-vendor list is indicative only. However final sub-vendor list is subject to BHEL/ customer approval during detailed engineering without any commercial/ delivery implication.

ii) New Sub-Vendor if proposed by Vendor during contract stage shall subject to BHEL/ end user approval without any commercial/ delivery implication.

ANNEXURE III:
DRAWING DOCUMENTS DISTRIBUTION PROCEDURE

DRAWING DOCUMNTS DISTRIBUTION SCHEDULE

Documents	PEM-Engineering
Documents for approval	**8**
Documents for information	**8**
Schedules, diagrams, lists, tables, calculation, specifications and other documents	**8**
Final as-built drawings	
CD-ROMs of final as-built drawings	**10**
Final as-built drawings (hard copy)	**14**
Final O&M manuals	**18**
CD-ROMs of Final O&M Manuals	**10**
Detailed project time schedules	**5**

Note:

- Bidder shall submit soft copy/hard copy/CD ROMs of all the finally approved drawings and O&M Manuals as required by Customer/Customer consultant/BHEL-site/BHEL-PEM. The exact number of hard copies/CD ROMs of these documents to be submitted shall be notified to the bidder at the time of detailed engineering and bidder shall submit the same without any commercial/delivery implications to BHEL/Customer.
- All the drawing documents along with the O&M manual (of all the revisions) are necessarily to be submitted in soft copies in addition to hard copies.
- Bidder to submit soft copies of all the drawing and document along with quality plans for BHEL review and approval.
- The date of submission of drawing documents shall be considered as the date of submission of hard and soft copes whichever is later.
- All the drawings shall be prepared on computer auto cad and other documents (like datasheet etc.) on MS office software. Bidder not complying these requirements shall not be considered. For the execution of the contract regular meeting (generally once in 15 days or as per project requirement) is required.
- Bidder has to come for meeting with the concerned dealing persons as per BHEL or customer requirement in a short notice.
- Bidder to submit instrument schedule, cable schedule and valve schedule (as applicable) in MS-Excel format during detailed engineering.
- Bidder to also furnish the auto cad copy/ MS-word (as applicable) of the following documents after award of contract. However any other auto cad copy/ MS-Excel/ MS-word of any other document as per the insistence of BHEL/ customer will also be submitted by the bidder without any delivery/ commercial implication to BHEL/ Customer.

    - P&IDs.
    - GA & Foundation Drawing
    - Local Control Panel/ Junction Box Wiring Diagram

ANNEXURE IV: PAINTING SPECIFICATION

CLAUSE NO.	TECHNICAL REQUIREMENTS
1.00.00	**Specification of surface preparation & painting**
1.01.00	Surface preparation methods and paint/primer materials shall be of the type specified herein. If the contractor desires to use any paint/primer materials other than that specified, specific approval shall be obtained by the contractor in writing from the employer for using the substitute material.
1.02.00	All paints shall be delivered to job site in manufacturers sealed containers. Each container shall be labelled by the manufacturer with the manufacturer's name, type of paint, batch number and colour.
1.03.00	Unless specified otherwise, paint shall not be applied to surfaces of insulation, surfaces of stainless steel/nickel/ copper/brass/ monel/ aluminum/ hastelloy/lead/ galvanized steel items, valve stem, pump rods, shafts, gauges, bearing and contact surfaces, lined or clad surfaces.
1.04.00	All pipelines shall be Colour coded for identification as per the NTPC Colour-coding scheme, which will be furnished to the contractor during detailed engineering..
1.05.0	**SURFACE PREPARATION**
1.05.01	All surfaces to be painted shall be thoroughly cleaned of oil. Grease and other foreign material. Surfaces shall be free of moisture and contamination from chemicals and solvents.
1.05.02	The following surface preparation schemes are envisaged here. Depending upon requirement any one or a combination of these schemes may be used for surface preparation before application of primer. SP1 Solvent cleaning SP2 Application of rust converter (Ruskil or equivalent grade) SP3 Power tool cleaning SP4 Shot blasting (shot blasting shall be used as surface preparation method for hot worked pipes prior to application of primer) SP4* Shot blast cleaning/ abrasive blast cleaning to SA21/2 (near white metal) 35-50 microns SP5 Shot blasting/ abrasive blasting. SP6 Emery sheet cleaning/Manual wire brush cleaning.
1.06.00	**APPLICATION OF PRIMER/PAINT**
1.06.01	The paint/primer manuacturer's instructions covering thinning, mixing, method of application, handling and drying time shall be strictly followed and considered as part of this specification. The Dry film thickness (DFT) of primer/paint shall be as specified herein.
1.06.02	Surfaces prepared as per the surface preparation scheme indicated herein shall be applied with primer paint within 6 hours after preparation of surfaces.
1.06.03	Where primer coat has been applied in the shop, the primer coat shall be carefully examined, cleaned and spot primed with one coat of the primer before applying intermediate and finish coats.When the primer coat has not been applied in the shop, primer coat shall be applied by brushing, rolling or spraying on the same day as the surface is prepared. Primer coat shall be applied prior to intermediate and finish coats.

CLAUSE NO.	TECHNICAL REQUIREMENTS
1.06.04	Steel surfaces that will be concealed by building walls shall be primed and finish painted before the floor is erected.Tops of structural steel members that will be covered by grating shall be primed and finish painted before the grating is permanently secured.
1.06.05	Following are the Primer/painting schemes envisaged herein: PS3 - Zinc Chrome Primer (Alkyd base) by brush/Spray to IS104. PS3* - Zinc Chrome primer (Alkyd base) by dip coat. PS4 - Synthetic Enamel (long oil alkyd) to IS2932. PS5 - Red Oxide Zinc Phosphate primer (Alkyd base) to IS 12744 PS9 - Aluminium paint to IS 2339. PS9* - Heat resistant Aluminium paint to IS-13183 Gr.-1 PS13 - Rust preventive fluid by spray, dip or brush. PS14 - weldable primer-Deoxaluminate or equivalent. PS16 - High Build Epoxy CDC mastic `15' . PS17 - Aliphatic Acrylic Polyurethane CDE134 ,%V=40.0(min.) PS18 - Epoxy based TiO2 pigmented coat PS19 - Epoxy Zinc rich primer (92% zinc in dry film (min.), %VS=40.0(min.) PS-20 - Epoxy based finish paint
1.06.06	All weld edge preparation for site welding shall be applied with one coat of wieldable primer.
1.06.07	For internal protection of pipes/tubes, VCI pellets shall be used at both ends after sponge testing and ends capped. VCI pellets shall not be used for SS components and composite assemblies.
1.06.08	SG membrane walls and other Flue gas swept pressure part surfaces shall be applied with appropriate primer for protection of surfaces during transit, storage and erection.
1.06.09	**a**) Equipment, pipes etc. with high temperature shall be painted with heat resistant aluminum paint (to be selected based on the service condition of component as per IS-13183). Two coats of paint shall be applied with total DFT 40 micron. b) Surface preparation before painting shall be carried out according to requirement indicated in this sub-section and international standard
1.06.10	A) Specification for the application of Epoxy coating for internal protection of DM tank & other vessels/tanks (as applicable) shall be as follows: Primer : One coat of unmodified epoxy resin along with polymide hardener. Paint : Two (2) coats unmodified epoxy resin along with Aromatic adduct hardener. Total thickness of primer and paint should not be less than 400 microns. B) Specification for application of chlorinated Rubber paint for external protection vessel, tanks, piping, valves & other equipments shall be as follows: i) For Indoor vessel, tanks, piping, valves & other equipments: (a) Surface preparation shall be done either manually or by any other approved method. (b) Primer coat shall consist of one coat of chlorinated rubber based zinc phosphate primer having minimum DFT of 50 microns. (c) Intermediate coat (or under coat) shall consist of one coat of chlorinated rubber based paint pigmented with Titanium dioxide with minimum DFT of 50 microns. (d) Top coat shall consist of one coat of chlorinated rubber paint of approved shade and colour with glossy finish and DFT of 50 microns.

Total DFT of paint system shall not be less than 150 microns.

ii) For Outdoor vessel, tanks, piping, valves & other equipments:

(a) Surface preparation shall be blast cleared using non-siliceous abrasive after usual wire brushing, which shall conform to Sa 2-1/2 Swiss Standard.

(b) Primer coat shall consist of one coat of epoxy resin based zinc phosphate primer having minimum DFT of 100 microns.

(c) Intermediate coat (or under coat) shall consist of epoxy resin based paint pigmented with Titanium dioxide with minimum DFT of 100 microns.

(d) Top coat shall consist of one coat of epoxy paint suitable pigmented of approved shade and colour with glossy finish and DFT of 75 microns. Additionally finishing coat of polyurethane of minimum DFT of 25 microns shall be provided.

The paint may be applied in one coat, in case high built paint is used, otherwise two coats shall be applied.

Total DFT shall not be less than 300 microns.

1.06.10 Primer/Painting Schedule

Sl. No	Description	Surface Preparation	Primer Coat			Intermediate Coat			Finish Coats			Total Min. Painting DFT (Microns)	Colour Shade
			Type of Primer	No. of Coats	Min. DFT / coat (Microns)	Type of coating	No. Coats	Min. DFT/ Coat (Microns)	Type of coating	No. Coats	Min. DFT/ Coat (Microns)		
A) Power Cycle Piping													As per NTPC Colour shade/ coding scheme
1.	All insulated Pipings, fittings/ components, Pipe clamps, Vessels/Tanks, Equipments etc.	SP3/SP4	PS9*	1	20	-	-	-	PS9*	1	20	40	
2.	All un-insulated Pipings, fittings/ components, Pipe clamps, Vessels/Tanks, Equipments etc.	SP3/SP4	PS 5	2	25	-	-	-	PS 4	3 **$**	35 **$**	155 **$**	
3	Constant Load Hanger (CLH) and Variable Load Hanger (VLH)	SP4*	PS19	1	40	-	-	-	PS17	1	30	70	
4	Piping hangers/ supports (other than (3) above. (un-insulated)	SP4 (SP6 - for cleaning of weld joints after erection,)	PS 5	1	40	PS 4	1	40	PS 17	1	40	120	
5.	Valves												
	a.) Cast / Forged Design Temo < 60 ºC	SP1/SP2 /SP3	PS9	1	20				PS 9	1	20	40	
	Design Temp > 60 ºC		#PS9*	1	20	-	-	-	#PS9*	1	20	40	

6.	All auxiliary Structural Steel components for pipe supports	Outside TG building and in SG envelope	SP4*	Inorganic Ethyl Zinc Silicate	1	75	PS18	1	75	a))Epoxy coat b)Final coat of paint PS17	2 1	35 30	250	As per NTPC Colour shade/ coding scheme
		Within TG building	SP4*	-do-	1	35	PS18	1	35	a))Epoxy coat b)Final coat of paint PS17	2 1	25 30	150	
7.	Weld Edges		SP6 (Hand cleaning by wire bursing)	PS13 (Weldable primer)	1	25	-	-	-	-	-	-	-	
B) Steam Generator & Auxiliaries:														
1	All surfaces with temperature 95°C or less and which are insulated		SP3/SP4	PS 5	2	30	-	-	-	PS 4	2 **$**	20 **$**	100 **$**	
2	All surfaces with temperature above 95°C and which are insulated		SP3/SP4	PS9*	1	20	-	-	-	PS9*	1	20	40	
3	All surfaces with temperature 95°C or less and which are uninsulated		SP3/SP4	PS 5	2	30	-	-	-	PS 4	2	20	100	

Note: **1)** SG membrane walls and other Flue gas swept pressure part surfaces shall be applied with appropriate primer for protection of surfaces during transit, storage and erection.

2) Painting specification for all other exposed steel surfaces not covered above shall be same as that given in Civil Sub-section, Part-B, Section VI for corrosion protection of steel structures.

3) For valves below 65NB and temperature upto & including 545 Deg.C , Parkerizing/zinc phosphate corrosion resistant coating as per ASTM F1137 is also acceptable in lieu of Aluminum paint.

C) LOW PRESSURE PIPING													
1	All Piping, fittings / components, valves, Equipments etc.	SP3/SP5	PS3/ PS5	2	25	PS 4	1	30	PS 4	2	35	150	As per NTPC Colour shade/ coding scheme
2	Stainless steel surface, Galvanized steel surface and gun metal surface.	No Painting											
3	On the internal surface for pipes 1000 Nb and above	A coat of primer followed by hot coal-tar enamel or coal tar epoxy painting (cold) shall be applied.											
		Surface Preparation	**Type of Primer**	**No. of Coats**	**Min. DFT / coat (Microns)**	**Type of coating**	**No. Coats**	**Min. DFT/ Coat (Microns)**	**Type of coating**	**No. Coats**	**Min. DFT/ Coat (Microns)**	**Min. Total DFT (Microns)**	
D) Compressed air system and Air-conditioning & Ventilation System													
For compressed air system, Surface preparation and painting of all the steel surfaces should be as per the relevant chapter in Part-B of technical specification. For Air Conditioning System & Ventilation System, Surface preparation and painting of all the steel surfaces (external) exposed to atmosphere (outdoor & indoor installation), centrifugal fans – Casing etc. should be as per the relevant chapter in Part-B of technical specification.													
D) ESP													
1	All surfaces with surface temperature 95°C or less (with or without insulation)	SP3/SP4	PS3/ PS3*	1	25	-	-	-	PS 4	1	30	55	
2	All surfaces with surface temperature above 95°C (with or without insulation)	SP3/SP4	PS5	2	30	-	-	-	-	-	-	60	

ANNEXURE V: MANDATORY SPARES LIST

MANDATORY SPARES FOR CHEMICAL DOSING SYSTEM			
S. No.	**ITEM**	**QUANTITY**	**UNIT**
C&I Mandatory Spares			
1.	**MEASURING INSTRUMENTS**		
a.	Transmitters of all types, ranges and model no. (for the measurement of Pressure, differential pressure flow, level, etc.).	10% or 1 no. of each type and model, whichever is more	Nos.
b.	Local Indicators like temperature gauges, pressure gauges, differential pressure gauges, flow gauges, flow meters etc.	5% or 1 no. of each make, model and type whichever is more (to be divided to various ranges in proportion to main of all make, model, type population).	Nos.
c.	Any other instrument (If applicable).	10 % or 1 no. of each type and model whichever is more.	Nos.
2.	**PROCESS CONNECTION PIPING (FOR IMPULSE PIPING/TUBING, SAMPLING PIPING / TUBING AND AIR SUPPLY PIPING AS APPLICABLE)**		
a.	Valves of all types and models.	10% or 1 no. of each type, class, size and model whichever is more.	Nos.
b.	2 way, 3way, 5way valve manifolds.	10% or 1 no. of each type, class, size and model whichever is more.	Nos.
c.	Fittings.	10% or 1 packet of each type, class, size and model whichever is more.	Nos.

The vendor warrants:

1. That all spares supplied will be new and in accordance with the contract document and will be free from defects in design, material and workmanship and shall further guarantee as under:

2. In case of any failure in the original component/ equipment due to faulty designs, materials and workmanship, the corresponding spare parts if any, supplied will be replaced without any extra cost to the BHEL and customer unless a joint examination and analysis by BHEL and/ or customer of such spare parts prove that the defect found in the original part that failed can safely be assured not to be present in spare parts.

3. The long term availability of spares to the BHEL and the customer for the full life of the equipment covered under the contract and that before going out of production of spare parts of the equipment covered under the contract, vendor and his sub-vendors shall give the BHEL and the customer at least 24 (Twenty Four) months advance notice so that the latter may order his bulk requirements of spares, if he so desires. The same provision will also be applicable to the sub-vendors. Further, in case of discontinuance of manufacture of any spares by the vendors or his sub-vendors the vendors and his sub-vendors, will provide the BHEL and the customer, 2 (two) years in advance, with full manufacturing drawings, material specifications and technical information required by the BHEL and the customer for the purpose of manufacture of such items and also the right to manufacture such spares for their own requirements.

4. Further in case of discontinuance of supply of spares by the vendors or his sub-vendors, the vendor will provide the BHEL and the customer with full information for replacement of such spares with other equivalent makes, if so required by the BHEL and the customer.

5. Notwithstanding the above, the vendor shall be responsible for supply of spares for the lifetime of the package at reasonable prices. The prices of all future requirements of spares shall be derived from the corresponding ex-works price at which the orders for such spares have been placed by the BHEL and the customer as a part of the mandatory or long term or any other kind of spares. The base indices for calculating ex-works price shall be commissioning of last equipment under main contract.

i) In case of emergency requirements of spares, the vendor would make every effort to expedite the manufacture and delivery of such spares on the basis of mutually agreed time schedule.

ii) In case the vendor fails to supply the mandatory or long term or any other kind of spares on the terms stipulated above, the BHEL and the customer shall be entitled to purchase the same from the alternate sources at the risk and the cost of the vendor and recover from the vendor, the excess amount paid by the BHEL and the customer over the rates as per the contract. In the event of such risk purchase by the BHEL or the customer, the purchases will be as per the works and procurement policy of the BHEL and the customer prevalent at the time of such purchases and BHEL & the customer at his option may include a representative from the vendor in finalizing the purchases.

iii) It is expressly understood that the final settlement between the parties in terms of relevant clauses of the tender document shall not relieve the vendor of any of his obligations under the provision of long term availability of spares and such provisions shall continue to be enforced till the expiry of 30 (thirty) years period reckoned from the scheduled date of completion of trial operation of the last equipment unless otherwise discharged expressly in writing by the BHEL or the customer.

ANNEXURE VI:

LIST OF ERECTION & COMMISSIONING SPARES

LIST OF COMMISSIONING SPARES

SL. NO.	ITEM DESCRIPTION	Quantity per skid (No.)	Total Nos.
1.0	**HYDRAZINE DOSING SYSTEM**		
1.1	Oil Seals for drive end.	4	8
1.2	Gaskets for drive end	4	8
1.3	Guide ring for plunger.	4	8
1.4	Teflon rings for valve/s.	8	16
1.5	Level gauge glass	2	4
1.6	Back up fuse	3	6
1.7	Pilot lamp	2	4
1.8	Push Button	2	4
1.9	Control fuse	2	4
1.10	Bulb for Annunciation	4	8
2.0	**AMMONIA DOSING SYSTEM**		
2.1	Oil Seals for drive end.	4	8
2.2	Gaskets for drive end	4	8
2.3	Guide ring for plunger.	4	8
2.4	Teflon rings for valves.	8	16
2.5	Level gauge glass	2	4
2.6	Back up fuse	3	6
2.7	Pilot lamp	2	4
2.8	Push Button	2	4
2.9	Control fuse	2	4
2.10	Bulb for Annunciation	4	8
3.0	**NaOH DOSING SYSTEM**		
3.1	Oil Seals for drive end.	4	8
3.2	Gaskets for drive end	4	8
3.3	Guide ring for plunger.	4	8
3.4	Teflon rings for valve/s.	8	16
3.5	Level gauge glass	2	4
3.6	Back up fuse	3	6
3.7	Pilot lamp	2	4
3.8	Push Button	2	4
3.9	Control fuse	2	4
3.10	Bulb for Annunciation	4	8

Notes: -

- Any other commissioning spare/ special tools and tackles required for the commissioning of the bidder's chemical dosing skids shall be in bidder's scope and same shall be supplied by bidder as part of his base offer and the same shall be mentioned specifically by the bidder in the un-priced schedule.
- All the commissioning spares provided shall be strictly of the same make and specification of the items it shall replace and shall be perfectly interchangeable.
- All the commissioning spares shall be separately packed and properly marked for easy identification at site.

ANNEXURE VII

DRAWING / DOCUMENTS SUBMISSION SCHEDULE

DRAWING/ DOCUMENTS SUBMISSION SCHEDULE

After award of LOI, following minimum drawing/ documents shall be submitted by the bidder for BHEL and Customer approval. However any additional drawing/document if found necessary for completion of the engineering, the same shall be submitted by bidder without any commercial & delivery implication to BHEL.

For the Drawings/ Documents Distribution procedure, please refer Annexure-III. The submission of soft copy or hard copy of the drawing/document whichever is later will be considered as final date of submission of the drawing/ documents. The bidder has to submit the revised drawing/document along with the compliance sheet indicating enumerate reply to all BHEL and customer comments or observations. Without compliance sheet the submission of the drawings/ documents will not be considered and the delay on this account will be solely on bidder's side only. Bidder to comply with the observations of the BHEL and CUSTOMER without price & delivery implication.

Bidder to further note that drawings submitted shall be complete in all respects with revised drawing submitted incorporating all comments. Any incomplete drawing submitted shall be treated as non-submission with delays attributable to bidder's account. Engineering meeting shall be held fort nightly, for which the bidder shall depute his concerned engineer along with project manager to BHEL PEM office or at customer office. The meeting can also be held at site.

List and schedule of drawings/documents to be submitted after award of contract:-

S. No.	Drawing/ document No.	Drawing/ document Title	No. of weeks for drawing/ document submission after placing LOI/ PO
1.	PE-V0-424-154-A001	P&I DIAGRAM FOR CHEMICAL DOSING SYSTEM	2
2.	PE-V0-424-154-A002	TECHNICAL DATA SHEET-CHEMICAL DOSING SYSTEM	4
3.	PE-V0-424-154-A003	GA DRAWING & FOUNDATION DETAILS	2
4.	PE-V0-424-154-A004	LOCAL CONTROL PANEL (INCLUDING WIRING DIAGRAM, LOGIC DIAGRAM AND FIELD TERMINATION DETAILS) - CDS	4
5.	PE-V0-424-154-A005	QAP FOR CHEMICAL DOSING SYSTEM	2
6.	PE-V0-424-154-A006	O&M MANUAL FOR CHEMICAL DOSING SYSTEM	16

NOTES:-

- Document approval by customer under Approval category or information category shall not absolve the vendor of their contractual obligations of completing the work as per specification requirement. Any deviation from specified requirement shall be reported by the vendor in writing and require written approval. Unless any change in specified requirement has been brought out by the vendor during detail engineering in writing while submitting the document to customer for approval, approved document (with implicit deviation) will not be cited as a reason for not following the specification requirement.
- In case vendor submits revised drawing after approval of the corresponding drawing, any delay in approval of revised drawing shall be to vendor's account and shall not be used as a reason for extension in contract completion. However, in case changes are necessitated due to any constraints at customer end, delay in review/ approval of such revised drawing beyond one month will be to customer's account.
- Bidder to note that drawings/documents submission shall be through web based Document Management System. Bidder would be provided access to the DMS for drawings/documents approval and adequate training for the same. Detailed methodology would be finalized during the kick-off meeting. Bidder to ensure following at their end.
  a) Internet explorer version – Minimum Internet Explorer 7

b) Internet speed – 2 mbps (Minimum preferred)
c) Pop ups from our external DMS IP (124.124.36.198) should not be blocked
d) Vendor's internal proxy setting should not block DMS application's link (http://124.124.36.198/wrenchwebaccess/login.aspx)
e) DMS user manuals to be used by BHEL PEM vendors for uploading, viewing, revising, commenting and tracking documents on PEM's DMS have been uploaded on PEM internet website (www.bhelpem.com) under the Vendor session.
f) For quick access bidder may refer the link http://bhelpem.com/DMSManuals/DMSManuals.html

ANNEXURE VIII:

FORMAT FOR OPERATION AND MAINTENANCE MANUAL

ANNEXURE-VIII
FORMAT FOR OPERATION AND MAINTENANCE MANUAL

Bidder to submit operation and Maintenance manual with minimum information as listed in below check list during contract stage.

Check List for Operation & Maintenance Manual

Project name :
Project number :
Package Name :
PO reference :
Document number :
Revision number :

Sl.no. & Sections	Description	Tick (√)if included in Manual			Remarks
		Yes	No	Not Applicable	
1.	Cover page				
1.1	Project Name				
1.2	Customer/ consultant Name				
1.3	Name of Package				
1.4	Supplier details with phone, FAX ,email address, Emergency Contact number				
1.5	Name and sign of prepared by, checked by & approved by				
1.6	Revision history with approval Details				
2.0	Index				
2.1	Showing the sections & related page nos. All the pages should be numbered section wise				
3.0	Description of Plant/ System				
3.1	Description/ write up of operating principle of system equipment/ associated sub-systems & accessories/controls system, operating conditions, performance parameters under normal , start up and special cases				
3.2	Equipment list and basic parameter with Tag numbers				
3.3	Data sheets approved by Customer/ for information and catalogues provided by original manufacturer				
3.4	Associated other packages and Interface/ terminal points				
3.5	P&ID & Process Diagrams				
3.6	GA Layout drawings, As-built drawings, Actual photograph of items/ system (Drawings of A2 & bigger sizes are to be attached in the last)				
3.7	Single line/ wiring diagrams				
3.8	Control philosophy/ control write-ups				
4.0	Commissioning Activities (if not covered in separate document i.e. erection manual, commissioning manual)				
4.1	Pre-Commissioning Checks				
4.2	Handling of items at site				
4.3	Storage at site				

4.4	Unpacking & Installation procedure				
5.0	Operation Guidelines for plant personal/ user/ operator				
5. 1	Interlock & Protection logic along with the limiting values of protection settings for the equipment along with brief philosophy behind the logic, drawings etc. to be provided.				
5. 2	Start up, normal operation and shut down procedure for equipment along with the associated systems in step by step mode. Valve sequence chart, step list, interlocks etc. with Equipment isolating procedures to be mentioned.				
5. 3	Do's & Don't of the equipment.				
5. 4	Safety precautions to be taken during normal operation. Safety symbols, Emergency instructions on total power failure condition/lubrication failure/any other condition				
5. 5	Parameters to be monitored with normal values and limiting values				
5. 6	Trouble shooting with causes and remedial measures				
5. 7	Routine operational checks, recommended logs & records				
5. 8	Changeover schedule if more than one auxiliary for the same purpose is given				
5. 9	Painting requirement and schedule				
5. 10	Inspection, repair, Testing and calibration procedures				
6.0	Maintenance guidelines for plant personal				
6.1	List of Special Tools and Tackles required for Overhaul/Trouble shooting including special testing equipment required for calibration etc.				
6.2	Stepwise dismantling and re-assembly procedure clearly specifying the tools to be used, checks to be made, records to be maintained, clearances etc. to be mentioned. Tolerances for fitment of various components to be given.				
6.3	Preventive Maintenance & Overhauling schedules linked with running hours/ calendar period along with checks to be given				
6.4	Long term maintenance schedules especially for structural, foundations etc.				
6.5	Consumable list along with the estimated quantity required during commissioning, normal running and during maintenance like Preventive Maintenances and Overhaul. Storage/handling requirement of consumables/self-life.				
6.6	List of lubricants with their Indian equivalent, Lubrication Schedule, Quantity required for each equipment for complete replacement is to be given				
6.7	List of vendors & Sub-vendors with their latest addresses, service centres, Telephone Nos.,				

	Fax Nos., Mobile Nos., e-mail IDs etc.				
6.8	List of mandatory and recommended spare parts list				
6.9	Tentative Lead time required for ordering of spares from the equipment supplier				
6.10	Guarantee and warranty clauses				
7.0	**Statutory and other specific requirements considerations.**				
8.0	**List of reference documents**				
9.0	**Binding as per requirement**				

P&IDs FOR CHEMICAL DOSING SYSTEM

FIRST ANGLE PROJECTION ALL DIMENSIONS ARE IN MM

DRAWING No.

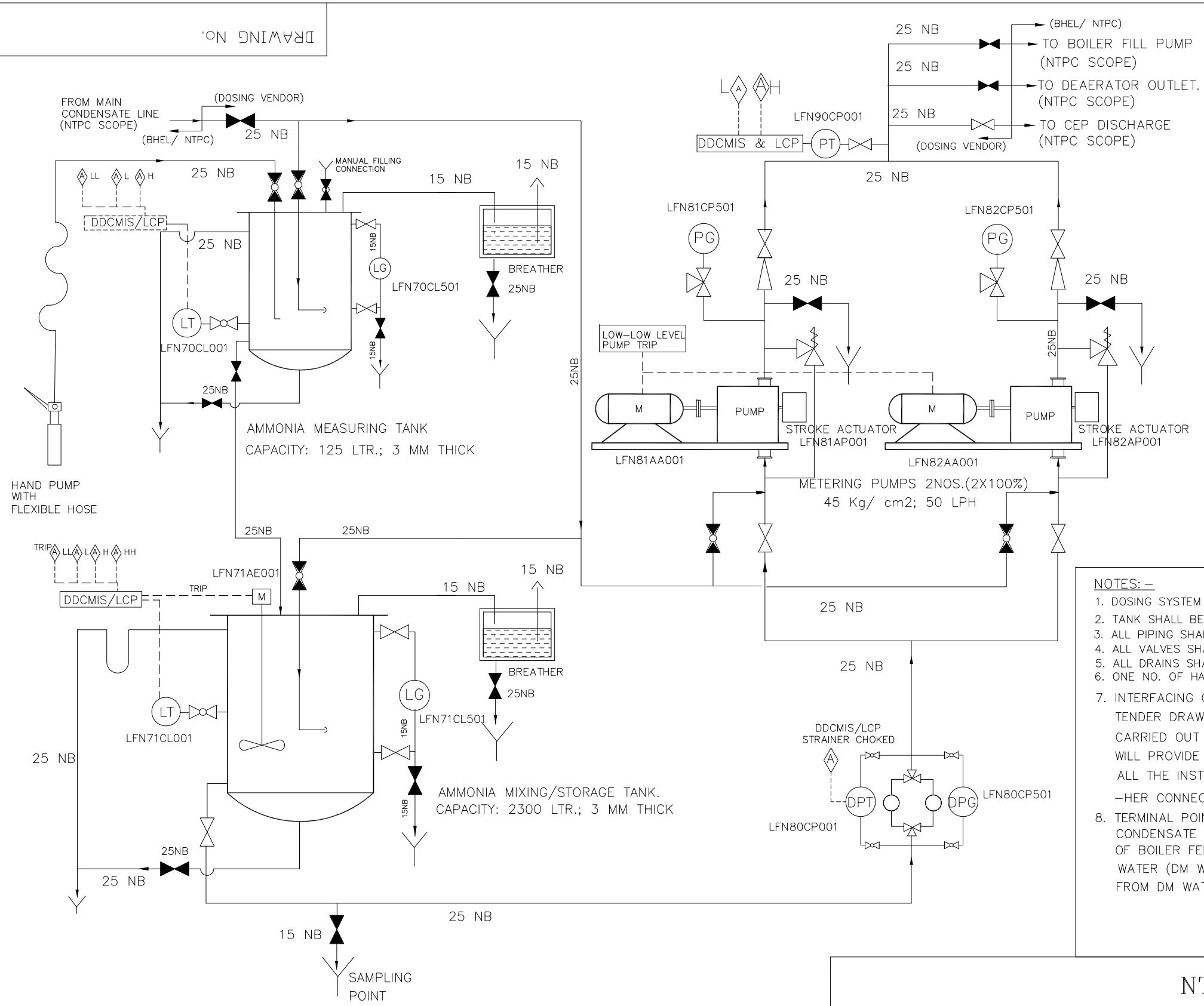

L E G E N D

	GATE VALVE NORMALLY OPEN
	GATE VALVE NORMALLY CLOSED
	NON RETURN VALVE
	GLOBE VALVE NORMALLY OPEN
	PRESSURE RELIEF VALVE
	THREE WAY VALVE
	VENT TO ATMOSPHERE
	FUNNEL
PG	PRESSURE GAUGE
LG	LEVEL GAUGE
M	MOTOR OPERATED (AC)
	GLOBE VALVE NORMALLY CLOSED
LT	LEVEL TRANSMITTER.
	DUPLEX FILTER
DPT	DIFF PRESSURE TRANSMITTER
DPG	DIFFERENTIAL PRESSURE GAUGE
PT	PRESSURE TRANSMITTER.
LT	LEVEL TRANSMITTER.

NOTES: –

1. DOSING SYSTEM SHALL BE SKID MOUNTED.
2. TANK SHALL BE OF SS–304 CONSTRUCTION,3MM THICK.
3. ALL PIPING SHALL BE OF SS 304 INCLUDING DRAIN PIPES.
4. ALL VALVES SHALL BE OF SS 304 SOCKET WELD ENDS.
5. ALL DRAINS SHALL BE CONNECTED AT ONE POINT ON SKID.
6. ONE NO. OF HAND PUMP SHALL BE SUPPLIED WITH ONE SKID.
7. INTERFACING OF ALL THE DRIVES AND INSTRUMENTS SHALL BE AS PER NTPC TENDER DRAWINGS AND ACCORDINGLY GROUPING & TERMINATION WILLL BE CARRIED OUT AND SHALL BE FURNISHED TO NTPC FOR REVIEW/ APPROVAL. NTPC WILL PROVIDE THE TERMINATIONS AT THE JUNCTION BOX IN THE SKID (WHERE ALL THE INSTRUMENTS AND DRIVE SIGNALS ARE TO BE TERMINATED) FOR FURT–HER CONNECTION TO BOP–DDCMIS.
8. TERMINAL POINT: a). REQ. STUB CONNECTIONS SHALL BE PROVIDED BY NTPC IN CONDENSATE AND FEED WATER PIPELINES OF TG SYSTEM FOR INTERCONNECTION OF BOILER FEED WATER CHEMICAL DOSING SYSTEM PIPING BY BHEL. b). DILUTION WATER (DM WATER) FOR LP DOSING SYSTEM TANKS SHALL BE TAPPED BY BHEL FROM DM WATER TERMINAL POINT BEING PROVIDED BY NTPC FOR ECW SYSTEM.

NTPC LTD.

2 X 800 MW TELANGANA STPP PHASE–1 (SG PACKAGE)

BHARAT HEAVY ELECTRICALS LTD
POWER SECTOR
PROJECT ENGINEERING MANAGEMENT
NEW DELHI

DEPT CODE		NAME	SIGN	DATE
A	DRN	MA		31.05.2017
	DESN	MA		31.05.2017
	CHD	AKS/JP		31.05.2017
	APPD	PK		31.05.2017

TITLE P&I DIAGRAM FOR AMMONIA DOSING SYSTEM

DRAWING No. PE-DG-424-154-A002

SHEET 01 OF 01 REV 1

SIZE-A3

REV.	DATE	ALTD	CHD	APPD

JOB No. 424

STATUS CONTRACT

DISTRIBUTION

COPY RIGHT AND CONFIDENTIAL
The information on this document is the property of BHARAT HEAVY ELECTRICALS LIMITED
it must not be used directly or indirectly in any way determental to the interest of the company.

COMPUTER FILE NAME :

FIRST ANGLE PROJECTION ALL DIMENSIONS ARE IN MM

DRAWING No.

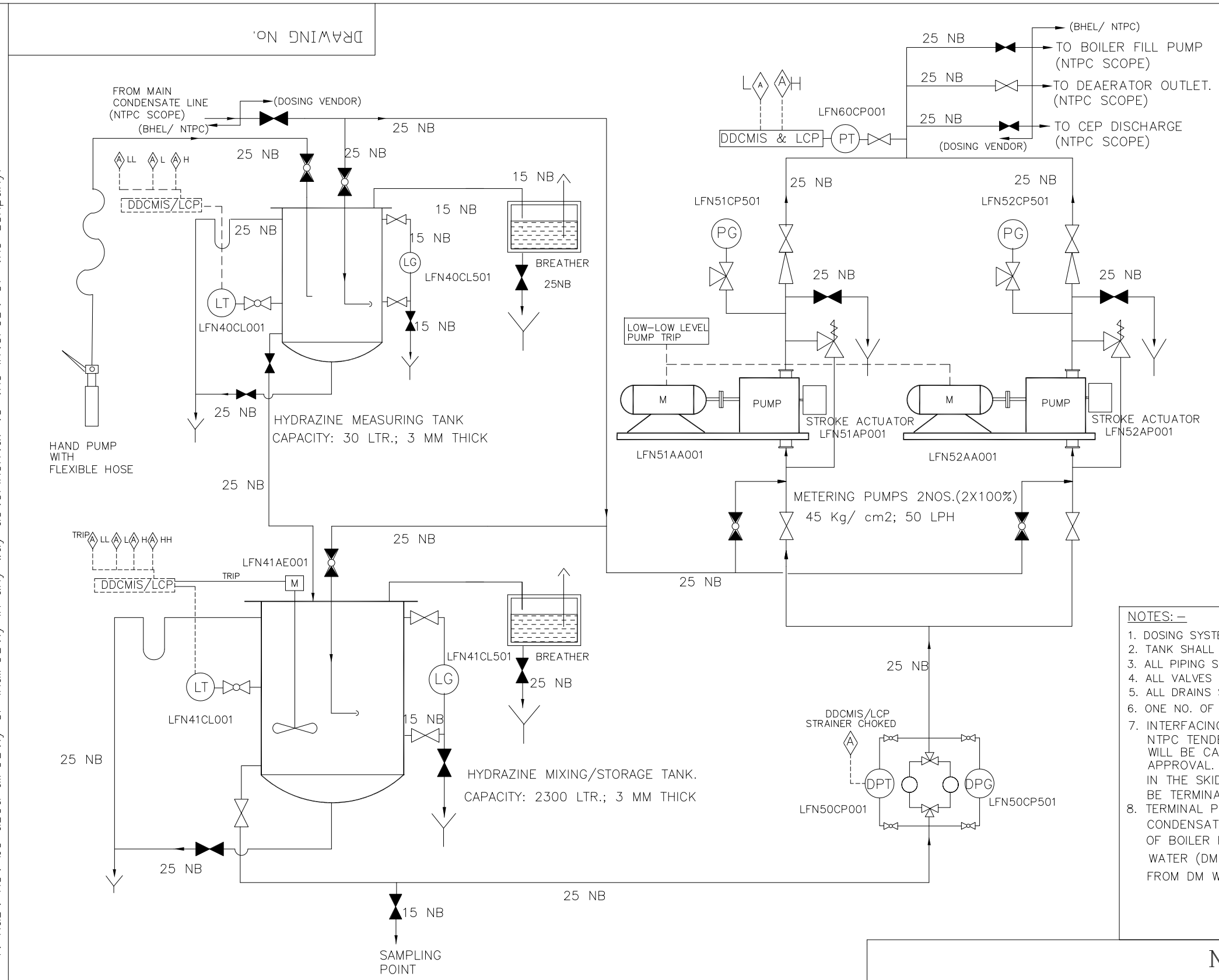

L E G E N D

	GATE VALVE NORMALLY OPEN
	GATE VALVE NORMALLY CLOSED
	NON RETURN VALVE
	GLOBE VALVE NORMALLY OPEN
	PRESSURE RELIEF VALVE
	THREE WAY VALVE
	VENT TO ATMOSPHERE
	FUNNEL
PG	PRESSURE GAUGE
LG	LEVEL GAUGE
M	MOTOR OPERATED (AC)
	GLOBE VALVE NORMALLY CLOSED
LT	LEVEL TRANSMITTER.
	DUPLEX FILTER
DPT	DIFF PRESSURE TRANSMITTER
DPG	DIFFERENTIAL PRESSURE GAUGE
PT	PRESSURE TRANSMITTER.
LT	LEVEL TRANSMITTER.

NOTES: –

1. DOSING SYSTEM SHALL BE SKID MOUNTED.
2. TANK SHALL BE OF SS-304 CONSTRUCTION,3MM THICK.
3. ALL PIPING SHALL BE OF SS 304 INCLUDING DRAIN PIPES.
4. ALL VALVES SHALL BE OF SS 304 SOCKET WELD ENDS.
5. ALL DRAINS SHALL BE CONNECTED AT ONE POINT ON SKID.
6. ONE NO. OF HAND PUMP SHALL BE SUPPLIED WITH ONE SKID.
7. INTERFACING OF ALL THE DRIVES AND INSTRUMENTS SHALL BE AS PER NTPC TENDER DRAWINGS AND ACCORDINGLY GROUPING & TERMINATION WILL BE CARRIED OUT AND SHALL BE FURNISHED TO NTPC FOR REVIEW/ APPROVAL. NTPC WILL PROVIDE THE TERMINATIONS AT THE JUNCTION BOX IN THE SKID (WHERE ALL THE INSTRUMENTS AND DRIVE SIGNALS ARE TO BE TERMINATED) FOR FURTHER CONNECTION TO BOP-DDCMIS.
8. TERMINAL POINT: a). REQ. STUB CONNECTIONS SHALL BE PROVIDED BY NTPC IN CONDENSATE AND FEED WATER PIPELINES OF TG SYSTEM FOR INTERCONNECTION OF BOILER FEED WATER CHEMICAL DOSING SYSTEM PIPING BY BHEL. b). DILUTION WATER (DM WATER) FOR LP DOSING SYSTEM TANKS SHALL BE TAPPED BY BHEL FROM DM WATER TERMINAL POINT BEING PROVIDED BY NTPC FOR ECW SYSTEM.

NTPC LTD.

2 X 800 MW TELANGANA STPP PHASE-1 (SG PACKAGE)

BHARAT HEAVY ELECTRICALS LTD
POWER SECTOR
PROJECT ENGINEERING MANAGEMENT
NEW DELHI

DEPT CODE		NAME	SIGN	DATE
A	DRN	MA		31.05.2017
	DESN	MA		31.05.2017
	CHD	AKS/JP		31.05.2017
	APPD	PK		31.05.2017

TITLE P&I DIAGRAM FOR HYDRAZINE DOSING SYSTEM

DRAWING No. PE-DG-424-154-A001

SHEET 01 OF 01 REV 1

SIZE-A3

REV.	DATE	ALTD	CHD	APPD

JOB No. 424

STATUS CONTRACT

DISTRIBUTION

COPY RIGHT AND CONFIDENTIAL
The information on this document is the property of BHARAT HEAVY ELECTRICALS LIMITED
it must not be used directly or indirectly in any way determental to the interest of the company.

COMPUTER FILE NAME :

FIRST ANGLE PROJECTION ALL DIMENSIONS ARE IN MM

DRAWING No.

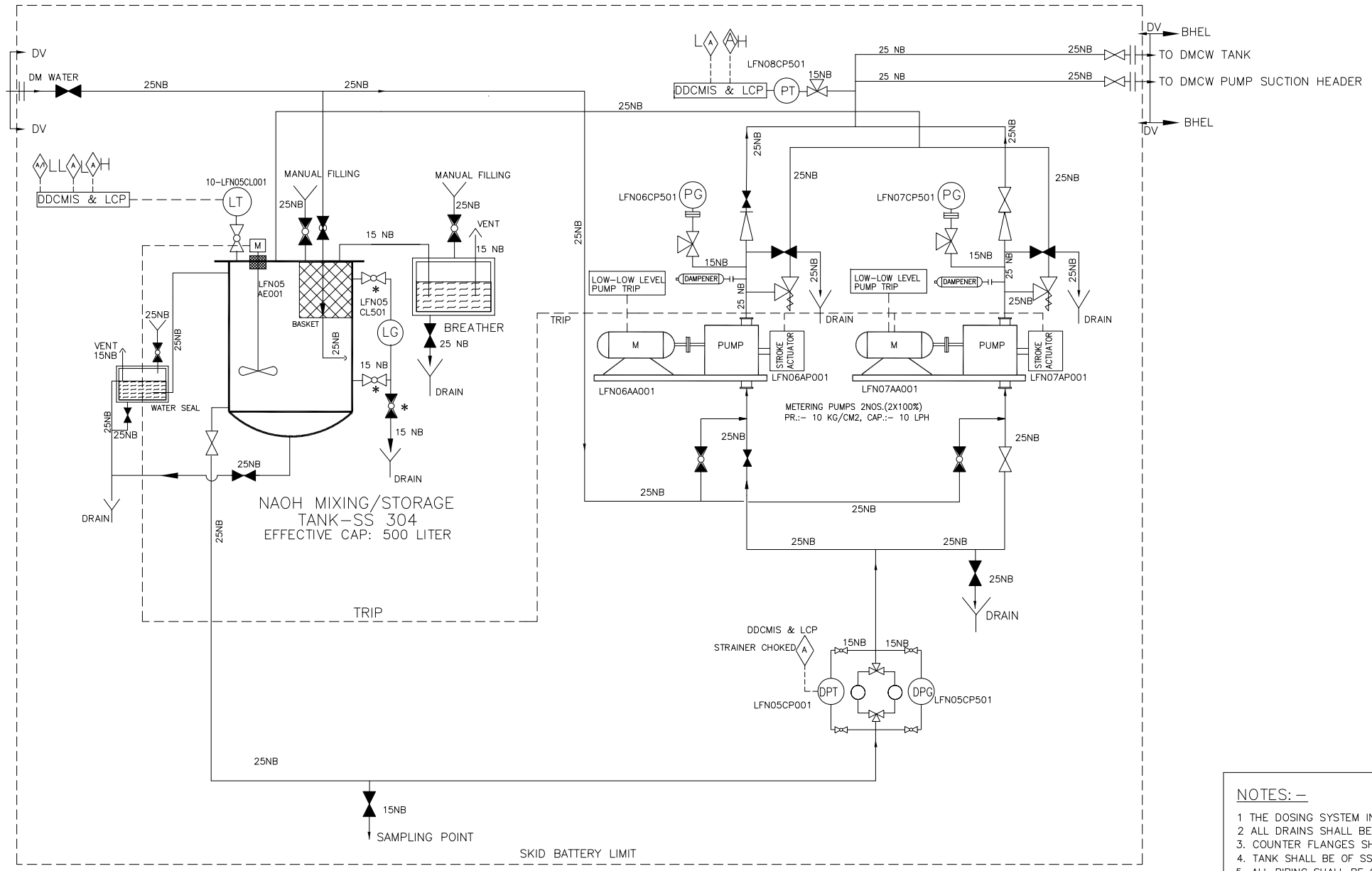

DV: DOSING VENDOR

	LEGEND
	METERING PUMP
	PUMP MOTOR
	GATE VALVE NORMALLY OPEN
	GATE VALVE NORMALLY CLOSED
	NON RETURN VALVE
	GLOBE VALVE NORMALLY OPEN
	PRESSURE RELIEF VALVE
	MULTI VALVE MANIFOLD
	VENT TO ATMOSPHERE
	FUNNEL
PG	PRESSURE GAUGE
LG	LEVEL GAUGE
M	STIRRER MOTOR
	GLOBE VALVE NORMALLY CLOSED
LT	LEVEL TRANSMITTER
	DUPLEX STRAINER
DPT	DIFFERENTIAL PRESSURE TRANSMITTER
DPG	DIFFERENTIAL PRESSURE GAUGE
PT	PRESSURE TRANSMITTER
	STIRRER
	CHEMICAL SEAL DIAPHRAGM
A	ALARM
	INTERLOCK
	STUFFING BOX

NOTES:-

1 THE DOSING SYSTEM INCLUDING ITS LOCAL CONTROL PANEL SHALL BE SKID MOUNTED.
2 ALL DRAINS SHALL BE CONNECTED VIA FUNNELS TO MAIN DRAIN HEADER AND TERMINATED AT ONE POINT ON SKID.
3. COUNTER FLANGES SHALL BE PROVIDED AT SKID INLET & OUTLET TERMINAL POINTS.
4. TANK SHALL BE OF SS-304 CONSTRUCTION,3MM THICK.
5. ALL PIPING SHALL BE OF SS 304, SCH. 40 INCLUDING DRAIN PIPES.
6. ALL VALVES SHALL BE OF SS 304 SOCKET WELD ENDS.
7. THIS SCHEME IS FOR ONE UNIT & IT SHALL BE TYPICAL FOR OTHER UNIT.
8. EFFECTIVE CAPACITY IS THE CAPACITY BETWEEN OVERFLOW LEVEL & LOW LEVEL SET POINT.

9. INTERFACING OF ALL THE DRIVES AND INSTRUMENTS SHALL BE AS PER NTPC TENDER DRAWINGS AND ACCORDINGLY GROUPING & TERMINATION WILLL BE CARRIED OUT AND SHALL BE FURNISHED TO NTPC FOR REVIEW/ APPROVAL. NTPC WILL PROVIDE THE TERMINATIONS AT THE JUNCTION BOX IN THE SKID (WHERE ALL THE INSTRUMENTS AND DRIVE SIGNALS ARE TO BE TERMINATED) FOR FURT- -HER CONNECTION TO BOP-DDCMIS.

10. TERMINAL POINT: a). REQ. STUB CONNECTIONS SHALL BE PROVIDED BY NTPC IN CONDENSATE AND FEED WATER PIPELINES OF TG SYSTEM FOR INTERCONNECTION OF BOILER FEED WATER CHEMICAL DOSING SYSTEM PIPING BY BHEL. b). DILUTION WATER (DM WATER) FOR LP DOSING SYSTEM TANKS SHALL BE TAPPED BY BHEL FROM DM WATER TERMINAL POINT BEING PROVIDED BY NTPC FOR ECW SYSTEM.

NTPC LTD.

2 X 800 MW TELANGANA STPP PHASE-1 (SG PACKAGE)

BHARAT HEAVY ELECTRICALS LTD
POWER SECTOR
PROJECT ENGINEERING MANAGEMENT
NEW DELHI

DEPT CODE		NAME	SIGN	DATE
A	DRN	MA		31.05.2017
	DESN	MA		31.05.2017
	CHD	AKS/JP		31.05.2017
	APPD	PK		31.05.2017

TITLE P&I DIAGRAM FOR NaOH DOSING SYSTEM

DRAWING No. PE-DG-424-154-A003

SHEET 01 OF 01 REV 0

SIZE-A3

REV.	DATE	ALTD	CHD	APPD

JOB No. 424

STATUS CONTRACT

DISTRIBUTION

COPY RIGHT AND CONFIDENTIAL
The information on this document is the property of BHARAT HEAVY ELECTRICALS LIMITED
it must not be used directly or indirectly in any way deterimental to the interest of the company.

COMPUTER FILE NAME :

DATA SHEET-A

S. NO	DESCRIPTION	HYDRAZINE DOSING	AMMONIA DOSING	NaOH DOSING
1.0 a	**No. of skid(s) per unit**	One (1)	One (1)	One (1)
1.0 b	**Total skid(s) for station**	Two (2)	Two (2)	Two (2)
2.0	**Measuring tank:**			
2.1	No. of tanks per Skid	One	One	NA
2.2	Capacity in litres	30	125	NA
2.3	Type	Vertical cylindrical, dished bottom tank	Vertical cylindrical, dished bottom tank	NA
2.4	Material of the tank	SS-304	SS-304	NA
2.5	Thickness	3 mm	3 mm	NA
2.6	Motorised Stirrer	NA	NA	NA
2.7	Dissolving basket	NA	NA	NA
2.8	MOC of stirrer	NA	NA	NA
2.9	Design Standard	IS 803/API 650	IS 803/API 650	NA
3.0	**Mixing cum storage tank**			
3.1	No. of tanks per Skid	One	One	One
3.2	Capacity in litres	2300	2300	500
3.3	Type	Vertical cylindrical, Bottom Dished end.	Vertical cylindrical, Bottom Dished end.	Vertical cylindrical, Bottom Dished end.
3.4	Material of the tank	SS-304	SS-304	SS-304
3.5	Thickness	3 mm	3 mm	6 mm
3.6	Motorised Stirrer	Propeller type with slow speed reduction gear unit		
3.7	Dissolving basket	NA	NA	Provided(50Mesh BS)
3.8	MOC -Dissolving basket	NA	NA	SS 316
3.9	MOC of stirrer	SS 316	SS 316	SS 316
3.10	Design Standard	IS 803/API 650	IS 803/API 650	IS 803/API 650
4.0	**Metering pump:**			
4.1	Medium to be handled	Hydrazine solution	Ammonia solution	NaOH solution
4.2	Type of pump	--------Positive displacement (Plunger type) metering pump----------		
4.3	Make of pump	As per approved sub vendor list during detailed engineering		
4.4	Nos. of pump-motor assembly	Two (2×100%)	Two (2×100%)	Two (2×100%)
4.5	Capacity	0-50 LPH	0-50 LPH	0-10 LPH
4.6	Discharge pressure	45 Kg/Cm^2 (g)	45 Kg/Cm^2 (g)	10 Kg/Cm^2 (g)
4.7	All Wetted parts of pumps	SS-316	SS-316	SS-316
4.8	Applicable standard	API 675	API 675	API 675
4.9	Type of stroke control	Local manual & automatic		
4.10	Connection at suction, Position	1″ ANSI B16.5 #150, bottom		
4.11	Connection at discharge, Position	1″ ANSI B16.5 #300, top		
5.0	**Strainers:**			

5.1	No. of strainers	One	One	One
5.2	Type	Duplex type	Duplex type	Duplex type
5.3	Material of screen	SS-304	SS-304	SS-304
5.4	Mesh Size	50 (BS)	50 (BS)	50 (BS)
6.0	**Main, Drain & Overflow Piping:**			
6.1	Material	ASTM A 312 GR TP 304 SCH 40	ASTM A 312 GR TP 304 SCH 40	ASTM A 312 GR TP 304 SCH 40
6.2	Diameter	25 NB	25 NB	25 NB
7.0	**Sampling & Vent Pipe:**			
7.1	Material	ASTM A 312 GR TP 304 SCH 40	ASTM A 312 GR TP 304 SCH 40	ASTM A 312 GR TP 304 SCH 40
7.2	Diameter	15 NB	15 NB	15 NB
8.0	**Main Drain Header:**			
8.1	Material	ASTM A 312 GR TP 304 SCH 40	ASTM A 312 GR TP 304 SCH 40	ASTM A 312 GR TP 304 SCH 40
8.2	Diameter	40 NB	40 NB	40 NB
9.0	**Valves:**			
9.1.00	**Gate & Globe valves**	The following parameters are applicable for all three systems.		
9.1.01	Body, Bonnet, Stem	ASTM A182 Gr. TP 304. Material for Stem shall be SS 316.		
9.1.02	Design standard	ANSI B 16.34/API 602 for gate valves, BS 5352 for globe valve		
9.1.03	Test standard	API 598		
9.1.04	Size	As per P&ID		
9.1.05	End Connections	SW ANSI B 16.11		
9.1.06	Rating	---------Class ASA 800--------		
9.1.07	Valve operation	Manual		
9.2.00	**Check valves/ NRV**			
9.2.01	Body, cover, disc/piston	ASTM A182 Gr. TP 304	ASTM A182 Gr. TP 304	ASTM A182 Gr. TP 304
9.2.02	Design standard	ANSI B 16.34/API 602	ANSI B 16.34/API 602	ANSI B 16.34/API 602
9.2.03	Test standard	API 598/MSS-SP-61	API 598/ MSS-SP-61	API 598/ MSS-SP-61
9.2.04	Size	25 NB	25 NB	25 NB
9.2.05	End Connections	SW ANSI B 16.11	SW ANSI B 16.11	SW ANSI B 16.11
9.2.06	Rating	---------Class ASA 800--------		
9.2.07	Valve operation	Manual	Manual	Manual
9.3.00	**Pressure relief valve (PRV)**			
9.3.01	Body, bonnet, disc, nozzle	ASTM A182 Gr. TP 316	ASTM A182 Gr.TP 316	ASTM A182 Gr.TP 316
9.3.02	Valve discharges to	Mixing/storage Tank	Mixing/storage Tank	Mixing/storage Tank
9.3.03	Back pressure	Constant	Constant	Constant
9.3.04	Set pressure	50 Kg/Cm^2	50 Kg/Cm^2	12 Kg/Cm^2
9.3.05	Inlet Connections	25 NB, Flanged, ANSI B16.5, 300#	25 NB, Flanged, ANSI B16.5, 300#	25 NB, Flanged, ANSI B16.5, 300#
9.3.06	Outlet Connections	25 NB, Flanged, ANSI B16.5, 150#	25 NB, Flanged, ANSI B16.5, 150#	25 NB, Flanged, ANSI B16.5, 150#

10.0	**Fittings**	Forged steel to A182 F304, Dimension to ANSI B 16.11 socket weld ends.		
11.0	**Flanges (pump suction / pump discharge)**	------ANSI B 16.5 CL 150 / ANSI B 16.5 CL 300 ------		
12.0	**Structural steel**	IS 2062	IS 2062	IS 2062
13.0	**Hand pump**	One (1) no. Wetted Part MOC: SS-304	One (1) no., Wetted Part MOC: SS-304	NA
14.0	**Step ladder with platform**	IS 2062	IS 2062	IS 2062
15.0	**Nut & Bolt**	ASTM A-193 Gr B7 and ASTM A-194 Gr. 2H respectively.	ASTM A-193 Gr B7 and ASTM A-194 Gr. 2H respectively.	ASTM A-193 Gr B7 and ASTM A-194 Gr. 2H respectively.

SECTION I-B: SPECIFIC TECHNICAL REQUIREMENTS (ELECTRICAL)

SPECIFIC TECHNICAL REQUIREMENTS: ELECTRICAL

1.0 EQUIPMENT & SERVICES TO BE PROVIDED BY BIDDER/ PURCHASER

a) Services and equipment as per "Electrical Scope between BHEL and Vendor".
b) Any item/ work either supply of equipment or erection material which have not been specifically mentioned but are necessary to complete the work for trouble free and efficient operation of the plant shall be deemed to be included within the scope of this specification. The same shall be provided by the bidder without any extra charge.
c) Supply of mandatory spares as specified in the specifications of mechanical equipment.
d) Electrical load requirement for Chemical Dosing System.
e) All equipment shall be suitable for the power supply fault levels and other climatic conditions mentioned in the enclosed project information.
f) Bidder to furnish list of makes for each equipment at contract stage, which shall be subject to customer/ BHEL approval without any commercial and delivery implications to BHEL.
g) Various drawings, data sheets as per required format, Quality plans, calculations, test reports, test certificates, operation and maintenance manuals, etc. shall be furnished as specified at contract stage. All documents shall be subject to customer/BHEL approval without any commercial implication to BHEL.
h) Motor shall meet minimum requirement of motor specification.
i) Vendor to clearly indicate equipment locations and local routing lengths in their cable listing furnished to BHEL.
j) Cable BOQ worked out based on routing of cable listing provided by the vendor for "both end equipment in vendor's scope" shall be binding to the vendor with +10 % margin to take care of slight variation in routing length & wastages.

2.0 DOCUMENTS TO BE SUBMITTED ALONG WITH BID

2.1 The electrical specification without any deviation from the technical/quality assurance requirements stipulated shall be deemed to be complied by the bidder in case bidder furnishes the overall compliance of package technical specification in the form of compliance certificate/No deviation certificate.

2.2 No technical submittal such as copies of data sheets, drawings, write-up, quality plans, type test certificates, technical literature, etc., is required during tender stage. Any such submission even if made, shall not be considered as part of offer.

2.3 Enclosed quality plan of motor is tentative and subject to approval of NTPC/ BHEL during detailed engineering without any commercial implication to BHEL.

3.0 LIST OF ENCLOSURES

3.1 Electrical scope between BHEL & vendor.
3.2 Technical specification – Customer specification – Motors.
3.3 Data Sheet – A and Data Sheet C.
3.4 Quality Plan for motors < 55 KW.
3.5 Load data format (Annexure-II).
3.6 BHEL Cable Erection Philosophy

STANDARD ELECTRICAL SCOPE BETWEEN BHEL AND VENDOR FOR SKID MOUNTED SYSTEM (FOR EPC PROJECTS)

PACKAGE: CHEMICAL DOSING SYSTEM
SCOPE OF VENDOR: SUPPLY

PROJECT:

S.NO	DETAILS	SCOPE SUPPLY	SCOPE E&C	REMARKS
1	415V MCC	BHEL	BHEL	240 V AC (supply feeder)/415 V, 3 phase, 4 wire AC supply shall be provided by BHEL based on the load data provided by the vendor at contract stage for all equipment supplied by the vendor as part of contract. Any other voltage level (AC/DC) required will be derived by the vendor.
2	Local control panel	Vendor	Vendor*	Refer C & I specification for details
3	Local push buttons	Vendor	Vendor*	
4	Power cables, ordinary control cables and screened control cables	Vendor	Vendor*	Within the skid. If starters are in MCC, then outside skid, cables scope shall be as per note no. 1.
5	Junction box for control & instrumentation cable (if applicable)	Vendor	Vendor*	
6	Any special type of cable like compensating, co-axial, prefab, MICC & fibre optical	Vendor	Vendor*	Within the skid
7	Equipment grounding	Vendor	Vendor*	Within the skid. All equipment metallic enclosures / frames, metal structure etc. shall be grounded at two points each to the nearest grounding points / risers provided by BHEL.
8	Motors with base frame and fixing hardware for motors.	Vendor	Vendor*	Makes shall be subject to customer/ BHEL approval at contract stage.
9	Cable glands ,lugs and bimetallic strip for equipment supplied by Vendor	Vendor	Vendor*	1. Double compression Ni-Cr plated brass cable glands 2. Solder less crimping type heavy duty tinned copper lugs for power and control cables.

PACKAGE: CHEMICAL DOSING SYSTEM
SCOPE OF VENDOR: SUPPLY

10	Below grade grounding	BHEL	BHEL	
11	a) Input cable schedules (C & I) b) Cable interconnection details for above c) Cable block diagram	Vendor Vendor Vendor	- - -	Cable listing for Control and Instrumentation Cable in enclosed excel format shall be submitted by vendor during detailed engineering stage.
12	Electrical Equipment GA drawing & skid GA drawing	Vendor	-	For necessary interface review.

NOTES: - 1. If motor starters are provided in main MCC then BHEL will provide power & control cable including supply, laying & termination.
2. All QPs shall be subject to approval of BHEL/customer after award of contract without any commercial implication.

*E&C by vendor during factory assembling of the skid.

LOAD TITLE	RATING (KW / A)		UNIT (U)/STN (S)	Nos.		VOLTAGE CODE*	FEEDER CODE**	EMER. LOAD (Y)	CONT.(C)/ INTT.(I)	STARTING TIME >5 SEC (Y)	LOCATION	BOARD NO.	CABLE		BLOCK CABLE DRG. No.	CONTROL CODE	REMARKS	LOAD No.
	NAME PLATE	MAX. CONT. DEMAND (MCR)		RUNNING	STANDBY								SIZE CODE	NOs				
1	2	3	4	5	6	7	8	9	10	11	12	13	14	15	16	17	18	19

ANNEXURE-II

NOTES: 1. COLUMN 1 TO 12 & 18 SHALL BE FILLED BY THE REQUISITIONER (ORIGINATING AGENCY); REMAINING COLUMNS ARE TO BE FILLED UP BY PEM (ELECTRICAL)/ CUSTOMER

2. ABBREVIATIONS : * VOLTAGE CODE (7):- (ac) A=11 KV, B=6.6 KV, C=3.3 KV, D=415 V, E=240 V (1 PH), F=110 V (cc): G=220 V, H=110 V, J=48 V, K=+24V, L=-24 V

: ** FEEDER CODE (8):- U=UNIDIRECTIONAL STARTER, B=BI-DIRECTIONAL STARTER, S=SUPPLY FEEDER, D=SUPPLY FEEDER (CONTACTER CONTROLLED)

LOAD DATA (ELECTRICAL)	JOB NO.	424	ORIGINATING AGENCY			PEM (ELECTRICAL)	
	PROJECT TITLE	2X800 MW TELANGANA KARIMNAGAR STPP(SG ISLAND)	NAME			DATA FILLED UP ON	
	SYSTEM	CHEMICAL DOSING SYSTEM	SIGN.			DATA ENTERED ON	
	DEPTT. / SECTION	MAX	SHEET 1 OF 1		REV. 01	DE'S SIGN. & DATE	

SPECIFIC ELECTRICAL REQUIREMENT FOR CHEMICAL DOSING SYSTEM

DATA SHEET-A

SL.NO.	PARAMETERS	UNIT	KARIMNAGAR
	MOTOR		
1	DESIGN AMBIENT TEMP	DEG. C	50
2	VOLTAGE SUPPLY AND VARIATION	VOLT	415V, ± 10%
3	FREQUENCY WITH VARIATION	Hz	50(+ 3% to - 5%)
4	COMBINED VOLTAGE & FREQUENCY VARIATION		10% (absolute)
5	MAX ACCEPTABLE RATING OF MOTOR AT 415 V	KW	(Upto) 200 KW
6	SYSTEM FAULT LEVEL AND ITS DUARTION	KA	50kA for 1sec
7	SUTABILITY OF TERMINAL BOX FOR FAULT LEVEL AND DURATION	110kW & Above (Breaker controlled)	50kA for 1sec
		Below 110kW (SFU+ Contactor controlled)	50 KA, 0.2 sec
8	LV SYSTEM GROUNDING		SOLIDLY
9	CLASS OF INSULATION & TEMPETURE RISE		THERMAL CLASS B or better (Refer clause 5.00.00 of technical spec for temperture rise)
10	MIN. STARTING VOLTAGE		85% below 110KW 80% from 110KW to 200 KW
11	MOTOR RATING FOR SINGLE PHASE SUPPLY		0.2 kW & Below
12	RATIO OF LOCKED ROTOR KVA at rared voltage to RATED KW		10 for below 110kW & 9 for 110 kW to 200kW
13	ACCEPTABLE NOISE LEVEL	DB	85dB(A)
14	TYPE OF STARTER PROVIDED IN MCC		DOL
15	DOP OF ENCLOSURE		IP-55 & IP-54 for outdoor & indoor respectively as per IS 4691 & IEC 60034-05.
16	SPACE HEATER REQUIREMENT	>30kW	30KW & ABOVE
17	PAINT SHADE		RAL - 5012 (blue)
18	SPECIAL REQUIREMENT		TYPE TEST REPORTS MORE THAN 10 YEARS OLD FROM THE DATE OF BID OPENING ARE NOT ACCEPTABLE.
19	ENERGY EFFICIENT		Continuous duty LT motors upto160kW output rating (at 50 deg C) shall be Premium Efficiency class – IE3 conforming to IS 12615 / IEC 60034-305

SECTION – IC: SPECIFIC TECHNICAL REQUIREMENTS (C&I)

SPECIFIC TECHNICAL REQUIREMENTS (C&I) WITH SCOPE OF SUPPLY:

1. Chemical Dosing system shall be operated from DCS (BHEL's scope).
2. Actuator shall be of integral starter type. Wiring of electrical actuators shall be as per Drive control philosophy/ wiring interface.
3. All instruments shall be terminated on JB/LCP in field and both instrument and JB/LCP are in vendor scope.
4. Bidder to supply the field instrumentation, control and solenoid valve (with limit switches for open close feedback) as required.
5. The cable used shall be 0.5 mm^2, G type (2P/4P/8P/12P) for Binary signals and F type cable (2P/4P/8P/12P/20P) for Analog signals. For solenoid 2.5mm^2, 3-core cable shall be used (as shown in drive controlled philosophy/ interface drawing).
6. For cable scope refer to Standard electrical scope between BHEL and vendor.
7. The junction boxes for termination of instruments/drives and local panel are in vendor's scope.
8. Any push buttons, alarms and metering requirement on the LCP panels shall be supplied by vendor and shall be finalized during detail engineering.
9. Local Stop push button (shrouded type) shall be provided by vendor for all drives for start and stopping of the drives. The contact of the push button shall be wired directly to MCC. All such contacts shall be suitably connected DCS for reporting of local operation. The PB shall be lockable type.
10. Power Supply shall be fed from two different feeders (BHEL scope). Auto changeover arrangement using contactors is in vendor’s scope.
11. The specifications for instruments mentioned in the specification are minimum requirements. The detail specifications shall be finalized during detail engineering.
12. All field instrument enclosures shall be IP-65.
13. Redundancy of sensors shall be provided by bidder:
    - Triple redundancy for all analog and binary inputs required for protection of system/ drives.
    - For all other control functions dual redundancy of the sensors shall be provided by the bidder.
14. All the transmitters supplied by Bidder shall be rack mounted. The transmitter racks shall be in Bidder's scope of supply. All transmitters shall be HART compatible.
15. Bidder to perform tests of C&I items/ instruments/ systems as per Quality plans/ type test attached in the specification. However, if any test not specified in the quality plan but specified in specification Tests for I&C equipment included elsewhere in specification will have to perform by Bidder without any implication.
16. Instrument installation and accessories required for the same shall be in Bidder's scope and shall be submitted after award of contract. However, any instrument installation not covered in the same shall be subject to customer and BHEL approval during detailed engineering.
17. Power supply shall be provided by BHEL at a single point, further distribution to various instruments/ equipment of the system shall be in bidder scope. Bidder to include necessary power distribution board in his scope. Any power supply other than the above, if required by any instrument/equipment has to be derived by the bidder from the above supply & all necessary hardware for the same shall be in bidder scope. Bidder to submit the power requirement along with the bid.
18. Local control panel, if required for operation shall be in bidder scope.
19. All the wetted parts of the instruments including the accessories like root valves, impulse piping, drain cocks, gauge-zeroing cocks, valve manifolds and all the other accessories required for mounting/erection of these local instruments as well as valves shall be of SS-316 material and same shall be in bidder’s scope.
20. Diaphragm seal shall be provided with Instruments having contact with corrosive media.
21. Double root valve shall be provided for all pressure tapings where the pressure exceeds 40kg/cm^2.
22. The necessary root valves, impulse piping, drain cocks, gauge-zeroing cocks, valve manifold and all the other accessories required for mounting/ erection of these local instruments shall be provided by bidder, even if not specifically asked for, on as required basis. The contacts of equipment mounted instruments; sensors, switches etc. for external connection including spare contacts shall be wired out to suitably located junction boxes by bidder.
23. The make/ model of various instruments/items/systems shall be subject to approval of BHEL/ Customer during detailed engineering stage. No implication in this regard shall be acceptable. In case of any conflict and repetition of clauses if the specification, the more stringent requirements among them are to be complied with.
24. The quantity of instruments for auxiliary system shall be as per tender P &ID wherever provided of the respective system as a minimum, for bidding purpose. However, Bidder shall also include in his proposal all the instruments and devices that are needed for the completeness of the plant auxiliary system/ equipment supplied by the bidder, even if the same is not specifically appearing in the P&ID. During detail engineering if any additional instruments are required for safe & reliable operation of plant, bidder shall supply the same without any price implication.
25. In case of any discrepancy in the requirement noted by the bidder in the specification, the same will be brought out to notice of BHEL in the form of pre-bid clarification. The requirements given are to be read in conjunction

with detailed Technical specification. In absence of any pre-bid clarification, the more stringent requirement as per interpretation of customer shall prevail without any implication.

26. Use of switches shall avoided unless it is unavoidable.
27. Drawings/Documents and data to be furnished after award of the contract:
    - Field instruments data sheet.
    - Panel GA drawings & Termination details.
    - Cable schedule and cable interconnection drawing.
    - Instrument schedule.
    - Drive List and Analog / Binary I/O List
    - Recommended Control write-up
    - Any other document decided during detailed engineering
    - Manuscript / Schematic of Chemical dosing

SECTION- IIA

GENERAL TECHNICAL REQUIREMENTS (MECH.)

1.0 SCOPE:

Design (i.e. preparation and submission of drawing/ documents including "As Built" drawings and O&M manuals), engineering, manufacture, fabrication, assembly, inspection/ testing at vendor's & sub-vendor's works, painting, maintenance tools & tackles (as applicable), fill of lubricants & consumables (excluding chemicals), mandatory spares along with spares for erection, start-up and commissioning as required, forwarding, proper packing, shipment and delivery at site for TELANGANA SUPER THERMAL POWER PROJECT PHASE-I (2 x 800 MW) SG PKG. Chemical Dosing System, complete with all accessories for the total scope as specified.

2.0 DESIGN BASIS:

- Design Calculation for the systems
- Customer specification

3.0 DESIGN PHILOSOPHY:

Chemical dosing systems have been designed to dose required quantity of chemicals in low-pressure side of feed water cycle to maintain the quality of boiler feed water.

4.0 LOW PRESSURE CHEMICAL DOSING:

4.1 **HYDRAZINE DOSING SYSTEM (TOTAL NO. OF SKIDS = 2 NOS.)**

(Refer drawing no.: PE-DG-424-154-A001)

Residual oxygen present in feed water can be detrimental to feed cycle equipment. In order to control the same, continuous dosing of dilute solution of hydrazine is done at deaerator outlet (BFP suctions) only. Though provision has been kept to dose hydrazine at CEP discharge and deaerator outlet also, but dosing shall be done at one place at a time. For this purpose one (1) no. per unit skid mounted Hydrazine dosing system shall be provided. Dosing system shall mainly comprise of the following:

4.1.1 **HYDRAZINE MEASURING TANK (1 No.)**

A Hydrazine measuring tank for storing & measuring the concentrated Hydrazine shall be provided. The tank shall be provided with accessories like breather with vent, level gauge, level transmitter and overflow. A filling connection shall be provided to fill the concentrated solution from hand pump in the tank. Concentrated solution shall be manually transferred to Hydrazine mixing cum storage tank by gravity flow when solution is to be prepared.

4.1.2 **HYDRAZINE MIXING CUM STORAGE TANK (1 No.)**

A dilute solution shall be prepared in the solution mixing cum storage tank using condensate and shall be uniformly mixed by a motorized stirrer (180-200 rpm). The tank shall also be provided with accessories like breather with vent, motorized stirrer, level gauge, level transmitter & overflow drain with sealing arrangement. The solution shall then be dosed to the required point with the help of dosing pumps.

4.1.3 **HYDRAZINE DOSING PUMPS (TOTAL 2 Nos.)**

Two numbers (2 x 100%) Positive displacement plunger type metering pumps (electrically operated, auto adjusted) with relief valves shall be provided.

The stroke of the pumps shall be adjustable from zero to 100% even when the pump is in operation so as to achieve a step-less variation of capacity over the specified range of operation.

A duplex strainer (1 x 100%) (Common for both pumps) shall be provided in the suction line of the pump with Differential Pressure Transmitter (DPT) and Differential Pressure Gauge (DPG). The pump shall also be provided with a pressure gauge in the individual discharge line, one pressure transmitter at a common discharge header of dosing pumps.

4.1.4 **HAND PUMP (1 NO.)**

A hand pump complete with flexible hose and couplings for transferring hydrazine from drum at finished floor level of the vicinity to measuring tank shall be provided.

4.1.5 **ASSOCIATED PIPING, VALVES ETC:**

As indicated in the drawing enclosed, to make the system complete, all associated piping & valves shall be provided. All piping in the skid shall be ASTM 312 Gr. TP 304 (seamless), pipe size: 40/ 25/ 15 Nb. Valve material shall be SS-304, ASA 800 rating. All valves shall be manually operated.

Drains from tanks & pipes shall be inter-connected to a common drain header and terminated at the dosing skid itself. Level gauge drain shall not be connected to main drain header since quantity of liquid is very small and occurrence of such cases is rare. The same may be manually disposed of. As flow in drains is not continuous & of very small quantity the same shall be led to local storm water drain.

4.1.6 **PARAMETERS FOR HYDRAZINE DOSING:**

Major parameters of the equipment as calculated & provided in the system are mentioned in enclosed Datasheet A.

4.1.7 **FLUSHING**

Condensate tapped from Condensate water line shall be used for flushing the various pipes lines and pumps of the system as shown in P&I drawing.

NOTE: - The scope described above for Hydrazine Dosing System is for one unit and it shall be typical for second unit.

4.2 **AMMONIA DOSING SYSTEM (TOTAL NO. OF SKIDS = 2 NOS.)**

(Refer drawing number: PE-DG-424-154-A002)

Boiler feed water/Condensate water should have proper pH in order to protect the system from corrosion. In order to control the same dosing of dilute solution of Ammonia is done at CEP discharge. Though provision has been kept to dose ammonia at deaerator outlet (BFP suction) and boiler fill pump discharge also, but dosing shall be done at one place at a time only. For this purpose one (1) no. skid mounted ammonia-dosing system shall be provided. Dosing system shall mainly comprise of the following:

4.2.1 **AMMONIA MEASURING TANK (1 No.)**

An Ammonia measuring tank for storing & measuring the concentrated Ammonia shall be provided. The tank shall be provided with accessories like breather with vent, level gauge, level transmitter and overflow. A filling connection shall be provided to fill the concentrated solution from hand pump in the tank. Concentrated solution shall be manually transferred to Ammonia mixing cum storage tank by gravity flow when solution is to be prepared.

4.2.2 **AMMONIA MIXING CUM STORAGE TANK (1 No.)**

A dilute solution shall be prepared in the solution mixing cum storage tank using condensate and shall be uniformly mixed by a motorized stirrer (180-200 rpm). The tank shall also be provided with accessories like breather with vent, motorized stirrer, level gauge, level transmitter & overflow drain with sealing arrangement. The solution shall then be dosed to the required point with the help of dosing pumps.

4.2.3 **AMMONIA DOSING PUMPS (TOTAL 2 Nos.)**

Two numbers (1 X 100%) Positive displacement plunger type metering pumps (electrically operated, auto adjusted) with relief valves shall be provided.

The stroke of the pumps shall be adjustable from zero to 100% even when the pump is in operation so as to achieve a step-less variation of capacity over the specified range of operation.

A duplex strainer (1 x 100%) (Common for both pumps) shall be provided in the suction line of the pump with Differential Pressure Transmitter (DPT) and Differential Pressure Gauge (DPG). The pump shall also be provided with a pressure gauge in the individual discharge line, one pressure transmitter at a common discharge header of dosing pumps.

4.2.4 **HAND PUMP (1 NO.)**

A hand pump complete with flexible hose and couplings for transferring ammonia from drum at finished floor level of the vicinity to measuring tank shall be provided.

4.2.5 **ASSOCIATED PIPING, VALVES ETC:**

As indicated in the drawing enclosed, to make the system complete, all associated piping & valves shall be provided. All piping in the skid shall be ASTM 312 Gr. TP 304 (seamless), pipe size: 40/25/15 Nb. Valve material shall be SS-304, ASA 800 rating. All valves shall be manually operated.

Drains from tanks & pipes shall be inter-connected to a common drain header and terminated at the dosing skid itself. Level gauge drain shall not be connected to main drain header since quantity of liquid is very small and occurrence of such cases is rare. The same may be manually disposed of. As flow in drains is not continuous & of very small quantity thus can be led to local storm water drain.

4.2.6 **PARAMETERS FOR AMMONIA DOSING:**

Major parameters of the equipment as calculated & provided in the system are mentioned in enclosed Datasheet A.

4.2.7 **FLUSHING**

Condensate tapped from Condensate water line shall be used for flushing the various pipes lines and pumps of the system as shown in P&I drawing.

NOTE: - The scope described above for Ammonia Dosing System is for one unit and it shall be typical for second unit.

4.3 ***CONTROL PHILOSPOHY (common for hydrazine and ammonia dosing systems):-***

This control write-up is applicable for the following LP dosing systems:

i) Hydrazine dosing system
ii) Ammonia dosing system

The operation of LP dosing system shall be as follows:-

The control of all dosing systems shall be realized in **DDCMIS** including ON/OFF command of the individual pumps and stirrers. All controls, fault indicators/ alarms, interlocks, logics shall be implemented in DDCMIS. Separate local panel shall be provided for each of the above said system.

The starter of all the motors shall be clubbed with main plant MCC. Power to all pumps, agitators etc. shall be fed from MCC. DDCMIS commands shall extend to MCC.

A local panel comprising of **'START'** push button, '**STOP'** push button along with '**ON/OFF/TRIP'** indication, local/ remote indication, stroke position indicator, raise/ lower push button for stroke position and local annunciation shall be provided for local operation. The '**START'** push button and 'STOP' push button shall be routed to **DDCMIS.**

The ON/OFF operation of all motorized stirrers and pumps shall also be provided in DDCMIS with local ON, OFF facility.

The auto stroke controllers of each pump shall be mounted on the local panel of respective dosing skid. The stroke position & adjustment will be done from DDCMIS and the stroke controller shall be suitable for accepting 4-20 mA DC signals. The pumps shall be provided with 24 V DC, 2- wire LVDT Type Position feedback transmitter to generate 4-20 mA DC signals to indicate stroke position in DDCMIS & Local panel.

The Local/ Remote selection switch (soft) shall be provided in DDCMIS and its indication shall be provided in LCP. LCP shall be located on the dosing skid.

1. Following interlocks shall be provided at low-low Level in the mixing cum storage tank:
   i) Running Dosing pump shall be tripped.
   ii) Stirrer motor of the respective tank shall be tripped.

2. Following conditions to be ensured before starting a stirrer:
   i) Level in the tank adequate.
   ii) MCC not disturbed.

3. Following conditions to be ensured before starting a pump:

i) Level in the tank adequate.
ii) MCC not disturbed.
iii) Duplex strainer- not choked

Standby Dosing Pump shall be started automatically in case of header pressure low.

4. Following shall be provided on LCP:
   i) ON/ OFF/ Fault- Lamp Indications for all drives (pumps & agitator).
   ii) Operation 'Local selected' / operation 'Remote selected'- Lamp Indication, common for all drives.
   iii) Pump- Start/ Stop & Agitator-Start/ Stop- Push Buttons.
   iv) Auto stoke controller.
   v) Stoke position indicator (may be a part of controller).
   vi) Local LED based annunciation driven by DDCMIS.

5. Following fault indications with alarm annunciations shall be provided on LCP:
   i) Low level in the mixing cum storage tank.
   ii) Low-low level in the mixing cum storage tank
   iii) High level in the measuring tank
   iv) High level in the mixing cum storage tank
   v) High-high level in mixing cum storage tank
   vi) High pressure at pump discharge header
   vii) Low pressure at pump discharge header
   viii) Strainer choked
   ix) Dosing pump-1-tripped
   x) Dosing pump-2-tripped
   xi) Stirrer motor-tripped
   xii) Low Level in measuring tank

SIGNAL EXCHANGE

6. Following signals shall be wired from **DDCMIS to LCP**. These shall be 24V DC powered signals. (PF contacts are not used to avoid the higher voltage LCP power supply reaching DDCMIS while contact interrogation).
   i) Operation local selected.
   ii) Operation remote selected.
   iii) Pump- 1/2 & stirrer (ON/OFF/FAULT).
   iv) Process conditions (as per clause 5 above).
   v) Pump- 1/2 stroke length demand signal (4-20 mA).

7. Following signals shall be wired from **LCP to DDCMIS**. Binary signals shall be P.F. contacts.
   i) All field signals.
   ii) START & STOP–PB commands for all drives (pumps & agitator).
   iii) Pump- 1/2 stroke length feedback signal (4-20 mA).

8. Signal Exchange **between DDCMIS & MCC** shall be as per applicable Drive Control Philosophy i.e.
   i) START & STOP command from DDCMIS to MCC.
   ii) ON, OFF & MCC Disturbed feedback from MCC to DDCMIS.

9. Signal Exchange **between LCP & MCC** shall be
   i) EMERGENCY STOP-PB for all drives (pumps & agitators) shall also be wired directly to MCC.

All the field instruments i.e. level transmitter, differential pressure transmitter, pressure transmitter etc. & stroke actuator shall be terminated at local panel by the vendor, for taking further to DDCMIS

5. <u>NaOH DOSING SYSTEM FOR ECW SYSTEM: (TOTAL NO. OF SKID = 2 NOS)</u>

(Refer drawing number PE-DG-424-154-A003)

Sodium Hydroxide (NaOH) dosing system shall be provided to dose NaOH solution in Equipment cooling water lines manually as per requirement of desired pH (pH around 9.5) in DMCW tank judged on trial basis. The Sodium Hydroxide Dosing shall be done in the ECW cycle during the initial fill and

for the compensation of cooling water for any leakage during normal run. The solution of NaOH shall be prepared manually by opening the inlet valve of DM water and adding NaOH lye in basket. The NaOH shall be dissolved by starting the motorized stirrer locally. The solution shall then be dosed to the required point by gravity. The dosing system shall consist of following:-

5.1.1 **NaOH MIXING CUM STORAGE TANK:**

One (1) no NaOH Mixing cum Storage Tank complete with motorized stirrer (180-200 rpm), CO_2 absorber, dissolving basket, level gauge, level transmitter, vent, overflow with water seal & drain shall be provided.

5.1.2 NaOH DOSING PUMPS (TOTAL 2 Nos.)

Two numbers (2 X 100%) Positive displacement plunger type metering pumps (electrically operated, auto adjusted) with relief valves shall be provided.

The stroke of the pumps shall be adjustable from 0 to 100% even when the pump is in operation so as to achieve a step-less variation of capacity over the specified range of operation.

A duplex strainer (1 x 100%) (Common for both pumps) shall be provided in the suction line of the pump with Differential Pressure Transmitter (DPT) and Differential Pressure Gauge (DPG). The pump shall also be provided with a pressure gauge in the individual discharge line, one pressure transmitter at a common discharge header of dosing pumps.

5.1.3 **ASSOCIATED PIPING, VALVES ETC:**

As indicated in the drawing enclosed, to make the system complete, all associated piping & valves shall be provided. All piping in the skid shall be ASTM 312 Gr. TP 304 (seamless) SCH. 40, Line size: 40/25/15 Nb. Valve material shall be SS-304, ASA 800 rating. All valves shall be manually operated.

Drains from tanks & pipes shall be inter-connected to a common drain header and terminated at the dosing skid itself. Level gauge drain shall not be connected to main drain header since quantity of liquid is very small and occurrence of such cases is rare. The same may be manually disposed of. As flow in drains is not continuous & of very small quantity thus shall be led to local storm water drain.

5.1.4 **PARAMETERS FOR NaOH DOSING:**

Major parameters of the equipment as calculated & provided in the system are mentioned in enclosed Datasheet A.

NOTE: - The scope described above for Hydrazine Dosing System is for one unit and it shall be typical for second unit.

5.1.5 **CONTROL & INSTRUMENTATION**

The operation of NaOH Dosing System shall be as follows: -

The control of all dosing systems shall be realized in **DDCMIS** including ON/OFF command of the individual pumps and stirrers. All controls, fault indicators/alarms, interlocks, logics shall be implemented in DDCMIS. Separate local panel shall be provided for each of the above said system.

The starter of all the motors shall be clubbed with main plant MCC. Power to all pumps, agitators etc. shall be fed from MCC. DDCMIS commands shall extend to MCC.

A local panel comprising of **'START'** push button, '**STOP**' push button along with '**ON/OFF/TRIP'** indication, local/ remote indication, stroke position indicator, raise/ lower push button for stroke position and local annunciation shall be provided for local operation. The '**START'** push button and 'STOP' push button shall be routed to **DDCMIS.**

The ON/OFF operation of all motorized stirrers and pumps shall also be provided in DDCMIS with local ON, OFF facility.

The auto stroke controllers (I/E converter) of each pump shall be mounted on the local panel of respective dosing skid. The stroke position & adjustment will be done from DDCMIS and the stroke

controller (I/E converter) shall be suitable for accepting 4-20 mA DC signals. The pumps shall be provided with 24 V DC, 2- wire LVDT Type Position feedback transmitter to generate 4-20 mA DC signals to indicate stroke position in DDCMIS & Local panel.

The Local/ Remote selection switch (soft) shall be provided in DDCMIS and its indication shall be provided in LCP. LCP shall be located on the dosing skid.

1. Following interlocks shall be provided at low-low Level in the mixing cum storage tank:
   i) Running Dosing pump shall be tripped.
   ii) Stirrer motor of the respective tank shall be tripped.

2. Following conditions to be ensured before starting a stirrer:
   i) Level in the tank adequate.
   ii) MCC not disturbed

3. Following conditions to be ensured before starting a pump:
   i) Level in the tank adequate.
   ii) MCC not disturbed.
   iii) Duplex strainer- not choked

4. Following shall be provided on LCP:
   i) ON/ OFF/ Fault- Lamp Indications for all drives (pumps & agitator)
   ii) Operation 'Local selected' / operation 'Remote selected'- Lamp Indication, common for all drives.
   iii) Pump- Start/ Stop & Agitator-Start/ Stop –Push Buttons
   iv) Auto stoke controller
   v) Stoke position indicator (may be a part of controller)
   vi) Local LED based annunciation driven by DDCMIS.

5. Following fault indications with alarm annunciations shall be provided on LCP:
   i) Low level in the mixing cum storage tank.
   ii) Low-low level in the mixing cum storage tank
   iii) High level in the mixing cum storage tank
   iv) High-high level in mixing cum storage tank
   v) High pressure at pump discharge header
   vi) Low pressure at pump discharge header
   vii) Strainer choked
   viii) Dosing pump-1--tripped
   ix) Dosing pump-2--tripped
   x) Stirrer motor—tripped

SIGNAL EXCHANGE

6. Following signals shall be wired from **DDCMIS to LCP**. These shall be 24V DC powered signals. (PF contacts are not used to avoid the higher voltage LCP power supply reaching DDCMIS while contact interrogation).
   i) Operation local selected.
   ii) Operation remote selected.
   iii) Pump- 1/2 & stirrer (ON/OFF/FAULT).
   iv) Process conditions (as per clause 5 above).
   v) Pump- 1/2 stroke length demand signal (4-20 mA).

7. Following signals shall be wired from **LCP to DDCMIS**. Binary signals shall be P.F. contacts.
   i) All field signals.
   ii) START & STOP–PB commands for all drives (pumps & agitator).
   iii) Pump- 1/2 stroke length feedback signal (4-20 mA).

8. Signal Exchange **between DDCMIS & MCC** shall be as per applicable Drive Control Philosophy i.e.
   i) START & STOP command from DDCMIS to MCC.
   ii) ON, OFF, MCC Disturbed feedback from MCC to DDCMIS.

9. Signal Exchange **between LCP & MCC** shall be
   i) EMERGENCY STOP-PB for all drives (pumps & agitators) shall also be wired directly to MCC.

All the field instruments i.e. level transmitter, differential pressure transmitter, pressure transmitter etc. & stroke actuator shall be terminated at local panel by the vendor, for taking further to DDCMIS

5.1.6 **FLUSHING**

DM Water shall be used for flushing the tank shown in attached drawing.

SECTION- IIB

GENERAL TECHNICAL REQUIREMENTS (ELECTRICAL)

	TITLE	SPECIFICATION NO.
	MOTOR	VOLUME II B
		SECTION D
	DATA SHEET - C	REV NO. 00 DATE
		SHEET 1 OF 2

S. No.	Description		Data to be filled by successful bidder
A.	**General**		
1	Manufacturer & country of origin		
2	Motor type		
3	Type of starting		
4	Name of the equipment driven by motor & Quantity		
5	Maximum Power requirement of driven equipment		
6	Rated speed of Driven Equipment		
7	Design ambient temperature		
B.	**Design and Performance Data**		
1	Frame size & type designation		
2	Type of duty		
3	Rated Voltage		
4	Permissible variation for		
5	a	Voltage	
6	b	Frequency	
7	c)	Combined voltage & frequency	
8	Rated output at design ambient temp (by resistance method)		
9	Synchronous speed & Rated slip		
10	Minimum permissible starting voltage		
11	Starting time in sec with mechanism coupled		
12	a) At rated voltage		
13	b) At min starting voltage		
14	Locked rotor current as percentage of FLC (including IS tolerance)		
15	Torque		
	a) Starting		
	b) Maximum		
16	Permissible temp rise at rated output over ambient temp & method		
17	Noise level at 1.0 m (dB		
18	Amplitude of vibration		
19	Efficiency & P.F. at rated voltage & frequency		
	a) At 100% load		
	c) At 75% load		

NAME OF VENDOR				REV.	
			SEAL		
NAME	SIGNATURE	DATE			

S. No.	Description	Data to be filled by successful bidder
	c) At starting	
C.	**Constructional Features**	
1	Method of connection of motor driven equipment	
2	Applicable Standard	
3	DOP of Enclosure	
4	Method of cooling	
5	Class of insulation	
6	Main terminal box	
	a) Type	
	b) Power Cable details (Conductor, size, armour/unarmour)	
	c) Cable Gland & lugs details (Size, type & material)	
	d) Permissible Fault level (kArms & duration in sec)	
7	Space heater details (Voltage & watts)	
8	Flame proof motor details (if applicable)	
	a) Enclosure	
	b) suitability for hazardous area	
	i Zone	O / I / II
	ii Group	IIA / IIB / IIC
9	No. of Stator winding	
10	Winding connection	
11	Kind of rotor winding	
12	Kind of bearings	
13	Direction of rotation when viewed from NDE	
14	Paint Shade & type	
15	Net weight of motor	
16	Outline mounting drawing No (To be enclosed as annexure)	
D.	**Characteristic curves/ drawings** (To be enclosed for motors of rating ≥ 55KW)	
	a) Torque speed characteristic	
	b) Thermal withstand characteristic	
	c) Current vs time	
	d) Speed vs time	

2X800 MW NTPC KARIMNAGAR TELANGANA STPP PHASE-I (SG ISLAND PACKAGE)

CABLE ERECTION PHILOSOPHY

BHEL DOCUMENT NO. PE–DC–424–507–E004

NTPC DWG NO: 9572-102-162-PVE-U-004

REVISION 01

BHARAT HEAVY ELECTRICALS LIMITED

POWER SECTOR

PROJECT ENGINEERING MANAGEMENT

NOIDA, UP [INDIA]

1.0 Scope

1.1 This document is intended to cover the aspects of cable raceway design and installation, laying and termination of various types of cables for the project.

1.2 Design calculations for cable sizing and selection are covered in a separate document.

1.3 Latest revisions of all drawings / documents shall be referred.

1.4 Reference standard

i) IS: 1255 (Code of practice for installation and maintenance of power cables).

1.5 Exclusions: The following areas / systems are excluded from the scope of this document.

a) Cable Routes other than SG area

2.0 Cable Raceway System

2.1 Cables shall generally be laid in galvanised MS cable trays in multi-tier arrangement. The trays shall in turn be supported on flexible cable tray support systems in SG Building, cable vaults, along structural members/ concrete surfaces inside plant buildings, cable trenches below switchboards/ MCCs in auxiliary plant buildings, and interconnecting pipe-cum-cable trestles. The trays shall be fixed to supports by means of bolting. Clamping of trays to the cantilever arms shall be resorted to where due to fabrication mismatches, there are misalignments between the respective locations of holes in trays and the cantilever arms.

2.2 Cable trays shall be oriented horizontally in all areas, except in areas subject to coal dust or ash deposition (such as boiler platforms, raceways along C-row of Main Power House area, interconnecting overhead cable tray paths between boiler area and ESP area, etc). Cable trays may be oriented vertically in other areas also if so required due to reasons such as space restriction, accessibility, plant aesthetics, operational clearances, etc. as per approved layout drawings. Branching of cables from main route shall be done through cable slits.

2.3 Cable trays shall have standard width of 150mm, 300mm & 600mm and standard lengths of 2.5m. Minimum thickness of mild steel sheets used for fabrication of cable trays shall be 2mm. Minimum thickness of side coupler pate shall be 3 mm. Cable trays shall be ladder type for power and control cables, while perforated type cable trays shall be used for instrumentation cables.

2.4 Main support channel and cantilever arms shall be fabricated out of minimum 2.5mm thick rolled steel sheet conforming to IS. Cantilever arms for various cable tray sizes shall be as follows:

S.No.	Cable tray Width	Cantilever Arm size for overhead trays	Cantilever Arm size for trays in trench
a)	150 mm	170 mm	170 mm
b)	300 mm	320 mm	320 mm
c)	600 mm	620 mm	750 mm

2.5 Cable trays shall be ladder/perforated type as specified complete with matching fittings (like brackets, elbows, bends, tees, crosses, etc.) accessories (like side coupler plates, etc. and hardware (like bolts, nuts, washers, G.I. strap, hook etc.) as required. Cable trays, fittings and accessories shall be fabricated out of rolled mild steel sheets free from flaws such as laminations, rolling marks, pitting etc. These (including hardware) shall be hot dip galvanized as per relevant IS.

2.6 Suitable cable tray accessories such as horizontal and vertical bends, crosses, tees, reducers etc. shall be used in conjunction with straight runs of cable trays wherever required as per approved layout drawings to ensure a continuous and break-free tray support system for cables.

Cable tray accessories shall be factory fabricated for use at site as per approved drawing titled "TYPICAL DETAILS OF CABLE TRAYS AND ACCESSORIES", (drawing no. PE–DG–424–507–E005). For specific site requirements (e.g. irregular angle bends such as 30°/60° bends, etc) as per layout conditions, tray accessories shall be fabricated at site from the straight length of respective sizes as required. They shall be applied with one coat of red lead primer, one coat of oil primer followed by two finishing coats of aluminium paint.

2.7 The flexible cable tray support system shall comprise of galvanised MS single channel (C1: having provision of supporting cable trays on one side) or double channel (C2: having provision of supporting cable trays on both sides) members as main supports, cantilever arms, various brackets, clamps, floor plates, all hardware such as lock washers, hexagon nuts, hexagon head bolt, support hooks, stud nuts, hexagon head screw, channel nut, channel nut with springs, fixing studs etc.

2.8 The main support and cantilever arms shall be fixed at site using necessary brackets, clamps, fittings, bolts, nuts and other hardware etc. to form various arrangements required to support the cable trays. Welding of the components shall not be allowed. However, welding of the bracket (to which the main support channel is bolted) to the overhead beams, structural steel, insert plates or reinforcement bars will be permitted. Any cutting or welding of the galvanized surface shall be brushed and red lead primer, oil primer & aluminium paint shall be applied.Running lengths of single / double channels shall be cut to required lengths for installation. Any cutting or welding of galvanised surface shall be brushed and red lead primer, oil primer & aluminium paint shall be applied.

2.9 Horizontally running cable trays shall be clamped by bolting to cantilever arms at an interval of 2000 mm. Vertically running cable trays shall be bolted to main support channel by suitable bracket/clamps on both top and bottom side rails at an interval of 2000 mm. For vertical cable risers/shafts cable trays shall be supported at an interval of 1000mm. Fixing of cable trays to cantilever arms or main support channel by welding shall not be accepted.Spacing between cable trays shall normally be kept 300mm for cable laying convenience and effective heat dissipation. However, wherever layout constraints do not permit this spacing, the same may be reduced to 250mm, for trays carrying control and instrumentation cables.

2.10 All cable way sections shall have identification, designations as per cable way layout drawings and painted/ stencilled at each end of cable way and where there is branch connection to another cable way. Minimum height of letter shall not be less than 75mm. For long lengths of cable trays, the identification shall be painted at every 10m. Risers shall additionally be painted / stencilled with identification numbers at every floor.

2.11 The cable trays and supports system shall be type tested, of approved makes, and conforming to their respective approved drawings.

2.12 Cable trays shall be grounded as per the provisions of the approved grounding document for the project.

2.13 For laying cables along building steel structures or masonry structures, the cables shall be fixed by clamping with GI saddles screwed to the GI flats welded/ embedded to the structures.

2.14 For laying cables along concrete walls, ceilings etc., the cables shall be clamped with GI saddles screwed to the GI flats welded to the inserts. Where inserts are not available the saddles may be directly fixed to the walls using anchor bolts and MS flat spacers of minimum 6mm thickness.

2.15 Directly buried cables

a) Cable trenches shall be constructed for directly buried cables. Construction of cable for cables shall include excavation, preparation of sieved sand bedding, riddled soil cover, supply and installation of brick or concrete protective covers, back filling and compacting, supply and installation of route markers and joint markers. Laying of cables and providing protective covering shall be as per IS: 1255 and the enclosed drawings showing cabling details.

b) RCC cable route and RCC joint markers shall be provided wherever required. The voltage grade of the higher voltage cables in route shall be engraved on the marker. Location of underground cable joints shall be indicated with cable marker with an additional inscription "Cable Joint". The marker shall project 150 mm above ground and shall be spaced at an interval of 30 meters and at every change in direction. They shall be located on both sides of road crossings and drain crossings. Top of cable marker/joint marker shall be sloped to avoid accumulation of water/dust on marker.

2.16 For outside cable trench to inside cable trench connection, pipe sleeves in walls as under will be provided for each cable tray for transiting the cables from one side to the other.

a) For each 600mm wide tray: 3 nos. 200 diameter PVC pipes.

b) For each 300mm wide tray: 2 nos. 200 diameter PVC pipes.

c) For each 150mm wide tray: 1 no. 200mm diameter PVC pipes.

The trays shall be stopped approximately 200mm short of the wall on both sides and cables passed through the pipe sleeves as above, the pipe sleeves being aligned horizontally with the respective cable trays. This method is adopted for smooth passage of cables and effective sealing of cable openings.

For cable entry to pump house / building, outside cable trays running on walls / structure shall enter by means of wall opening. Alternatively, cable pull pit shall be provided outside and shall connect to cable trench inside by means of pipe sleeves as indicated above.

Where cables cross roads/ rail tracks, the cables shall be laid in hume pipe/PVC pipe.

2.17 Local cabling in various auxiliary plants or pump houses from the main tray runs to equipment terminal boxes shall be through notches in floor, which will be filled up with sand and then provided with lean concrete covering matching with the floor after completion of cable laying.

2.18 Cable troughs shall be used for branching out few cables from main cable route. These shall be U-shaped, fabricated of mil steel sheets of thickness 2 mm and shall be hot dip galvanized. Troughs shall be standard width of 50mm & 75 mm with depth of 25 mm

3.0 **General Philosophy of Cable Installation**

3.1 Cable runs shall be uniformly spaced, properly supported and protected. All bends in runs shall be as per specification and made with due consideration to avoid sharp bending and kinking of cable. The bending radius of various types of cables shall not be less than those specified by cable manufacturers or that specified in IS: 1255.

3.2 For the purpose of cable laying, the cables are categorised as under:

a) HT: Power cables of 11KV / 3.3KV grade

b) LT: Power cables of 415KV grade, catering to loads at 415V AC/ 230V AC/ 220V DC / 24V DC

c) Control: Control cables of 1.1KV grade generally carrying control signals at 220V DC / 110V AC.

d) Instrumentation: (Also called screened control cables): Screened cables of cross-sections 1.5sqmm or lower generally carrying very low voltage very low current signals.

3.3 All cables shall be provided with identification tags indicating the cable numbers in accordance with the cable circuit schedule. Cable tags shall be fixed at terminal ends, at tray intersection / bend and at each side of floor/ wall/ duct crossings etc and at every 20m in cable trench/tray or buried run.

Cable tag shall be of 2 mm thick aluminum with number punched on it and securely attached to the cable by not less than two turns of 20 SWG GI wire conforming to IS:280. Alternatively, cable tags can be made of nylon, cable marking ties with cable number heat stamped on the cable tags.

3.4 Single core cables for a. c. three phase circuits, when laid on trays, shall be in trefoil formation (each trefoil with RYB phases formation), with distance of four times the diameter of cable between trefoil centrelines. The trefoil formation shall be duly secured to the cable tray by means of trefoil clamps of nonmagnetic material at every 2000mm interval. All multicore cables shall be laid touching formation.

3.5 Power and control cables shall be laid on separate tiers. The laying of different voltage grade cables shall be on different tiers according to the voltage grade of the cables as defined in clause 3.2 above. In horizontal tray stacks, H.T. cables shall be laid on top most tier and cables of subsequent lower voltage grades on lower tiers of trays.

3.6 1100 V grade multi-core power cables carrying continuous current when laid on trays shall be placed in single layer, touching and clamped by means of cable ties/clamps.

The cable clamps/ties required to clamp multicore cables shall be of SS-316 material, 12mm wide, polyester coated ladder lock type. The clamps/ties shall have self-locking arrangement & shall have sufficient strength. The cable clamps/ties shall be supplied in finished individual pieces of suitable length to meet the site requirements.

Cables of sizes indicated below, shall be clamped individually.

(a)	Single core cables	:	500 sq mm or higher (when not laid in trefoil formation- e.g. dc circuits)/ neutral cables)
(b)	Multi core cables	:	95 sq mm or higher

3.7 Control and instrumentation cables shall be laid in multi layers, but not exceeding three layers in any section. Special purpose cables (e.g. IPB, WAN etc.) shall be laid as per system manufacturer/ supplier recommendations with due regard to segregation of routes for redundant circuits.

3.8 While power, control and instrumentation cables shall generally be laid in separate trays, low current carrying power cables (valve/ damper actuator power cables) may be laid along with control cables. In most such cases, the cable sizes shall be 2.5 sq mm; however, in exceptional cases higher sizes as per approved cable sizing calculations (required due to voltage drop criterion) may be used.

3.9 Cables shall be placed on trays on the basis of their types and functions as under for horizontal formations:

a) HT cables: in the top tier(s).

b) LT power cables: in the tray(s) below the HT cable trays.

c) Control cables: in the tray(s) next below to the LT power cable tray(s).

d) Instrumentation cables (screened control cables): in the bottom most perforated tray(s).

HT Power, LT Power and LT Control/Instrumentation cables shall be separated from each other by at least 300mm.

3.10 For vertical formations, the outermost tray shall be considered as the topmost tray and the order indicated in clause 3.9 shall be followed. In rare cases, where there is no clear distinction of bottom/ top trays, the order convenient for linking the horizontal and vertical formations avoiding criss-crossing, or exit of cables shall be followed.

Typical examples of tray numbering are given overleaf.

3.11 Wherever it is not possible to accommodate cables as per the criteria indicated in the clauses 3.9 & 3.10 (due to layout constraints) for very short field runs, control cables may be laid in the same tray with the instrumentation cables with clear minimum gap of 100mm between the two types of cables.

3.12 All cables associated with the unit shall be segregated from cables of other units. Interplant cables of station auxiliaries shall be laid in such a way that not more than half of the drives are lost in case of single incident of fire. Power and Control cables for ac drives and corresponding ac or dc drives shall be laid in segregated routes. Cable route for one set of auxiliaries of same unit shall be segregated from the other set. Segregation means physical isolation to prevent fire jumping or minimum one hour fire rating. Cables of unit critical drives shall be segregated in such a way that not more than half of the drives are lost in case of single incident of fire. In switchyard, control cables of each bay shall be laid on separate racks / trays.

3.13 To facilitate pulling of cables in GI conduits, powdered soft stone, plastic soap or other dry inert lubricant may be used. However any material harmful to the cable sheaths shall not be used.

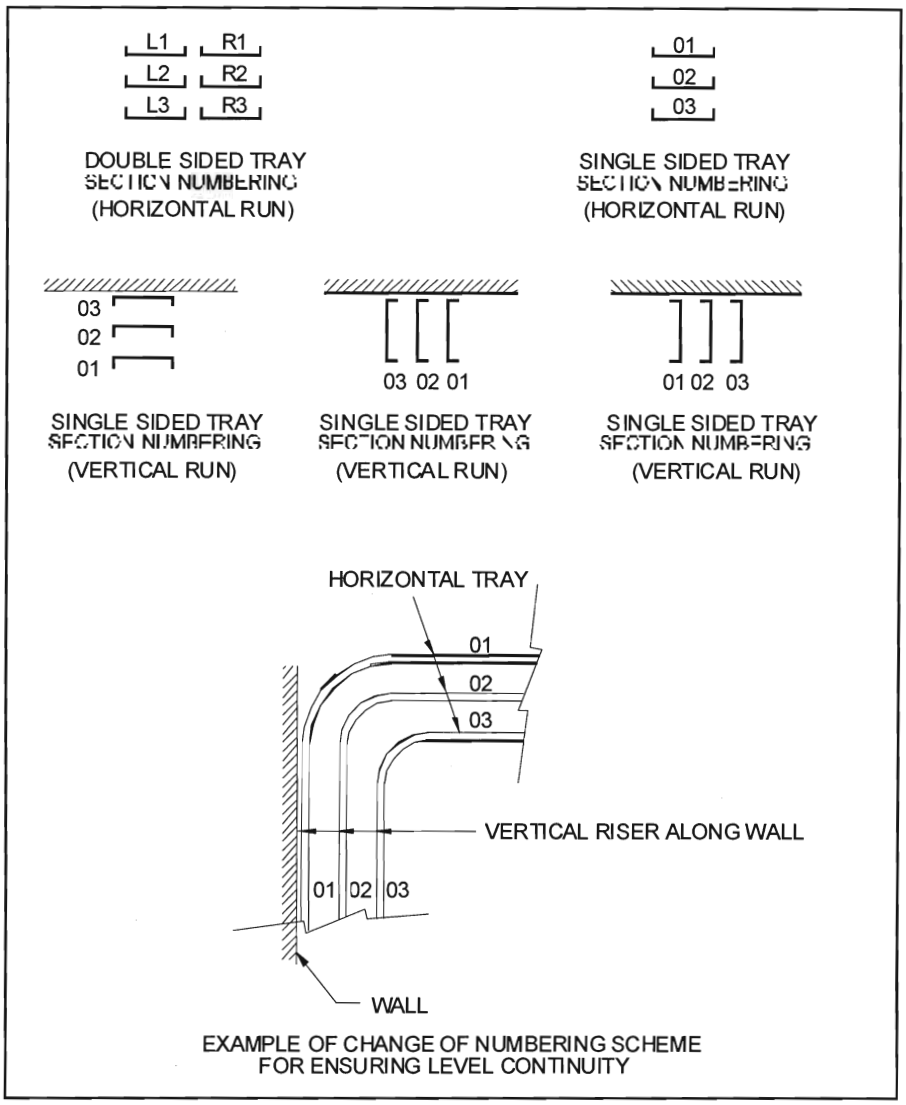

EXAMPLE OF CHANGE OF NUMBERING SCHEME FOR ENSURING LEVEL CONTINUITY

3.14 No single core cable shall pass through a GI conduit/ pipe or duct singly except DC single core cables. AC single core cables shall pass through GI conduit/ pipe in trefoil formation only, or through PVC pipes. Conduit/pipe occupancy shall not exceed 40% of the conduit/pipe cross-section area. Pipes / conduits if used in corrosive areas shall have anti-corrosive coating both inside & outside.

3.15 Wherever specific cable routes are not shown in cable schedules, cables may be laid through the shortest route as per the above criteria, as directed by site Engineer.

3.16 Power and control cables shall be secured fixed to trays/support with self-locking type clamps/ties. For horizontal trays arrangements, multicore power cables and control cables shall be secured at every five meter interval. For vertical tray arrangement, individual multicore power cables and control cables individual multicore power cables and control cables shall be secured at every one meter by nylon cable strap. After completion of cable laying work in the particular vertical tray, all the control cables shall be binded to trays/supports by aluminium strips at every five meter interval and at every bend.

3.17 For Cable unloading, pulling etc following guidelines shall be followed in general:

a) Cable drums shall be unloaded, handled and stored in an approved manner on hard and well drained surface so that they may not sink. In no case shall be drum be stored flat i.e. with flange horizontal. Rolling of drums shall be avoided as far as possible. For short distances, the drums may be rolled provided they are rolled slowly and in proper direction as marked on the drum. In absence of any indication, the drums may be rolled in the same direction as it was rolled during taking up the cables. For unreeling the cable, the drum shall be mounted on suitable jacks or on cable wheels and shall be rolled slowly so that cable comes out over the drum and not from below. All possible care shall be taken during unreeling and laying to avoid damage due to twist, kink or sharp bends. Cable ends shall be provided with sealed plastic caps to prevent damage and ingress of moisture.

b) While laying cable, ground rollers shall be used at every 2 meter interval to avoid cable touching ground. The cables shall be pushed over the rollers by a gang of people positioned in between the rollers. Cables shall not be pulled from the end without having intermediate pushing arrangements. Pulling tension shall not exceed the values recommended by cable manufacturer. Selection of cable drums for each run shall be so planned so as to avoid using straight through joints. Care should be taken while laying the cables so as to avoid damage to cables. If any particular cable is damaged, the same shall be repaired or changed to the satisfaction of Project Manager.

01

3.18 Two separate cable routes one on each side shall be provided for each boiler unit. Cables for one set of auxiliaries such as ID, FD, PA fan & half of the coal mills shall be routed in one route & for other set of auxiliaries through other route.

3.19 Cables shall be laid on cable trays strictly in line with cable schedule.

3.20 For road/rail crossings, buried RCC hume pipes (at a depth of minimum 1000mm) shall be used. Alternatively, RCC duct banks may also be used as per site condition.

3.21 If required the necessary modification in cable tray layout shall be made at site to suite condition i.e. to avoid fouling of cable trays with beam, columns, steel structure, pipes etc. with prior approval from project manager. Wherever accessories like bends, elbow, tees, crosses etc are required in cable trays installation a pre-fabricated type of accessories in line with technical specification requirement shall be used.

3.22 Recommended tightening torque shall be used for dowels and bolts.

4.0 Trefoil Clamps

The cable trefoil clamps shall be used for clamping of MV & LV single core cables to be routed in trefoil formation using trefoil clamps Trefoil clamps for single core cables shall be pressure die cast aluminum or fibre glass or nylon and shall include necessary fixing accessories like G.I. nuts, bolts, washers, etc.

			CUSTOMER : NTPC			PROJECT	2x800MW KARIMNAGAR STPP		SPECIFICATION :			
						TITLE	(SG ISLAND)		NUMBER :			
		QUALITY PLAN	BIDDER/ VENDOR :			QUALITY PLAN NUMBER PED-506-00-Q-006, REV-01			SPECIFICATION TITLE			
		SHEET 1 OF 2	SYSTEM			ITEM AC ELECT. MOTORS BELOW 55KW (LV)			SECTION			VOLUME III
SL. NO.	COMPONENT/OPERATION	CHARACTERISTICS CHECK	CAT.	TYPE/ METHOD OF CHECK	EXTENT OF CHECK	REFERENCE DOCUMENT	ACCEPTANCE NORM	FORMAT OF RECORD	AGENCY			REMARKS
									P	**W**	**V**	
1	**2**	**3**	**4**	**5**	**6**	**7**	**8**	**9**	**10**			**11**
1.0	ASSEMBLY	1.WORKMANSHIP	MA	VISUAL	100%	MANUF'S SPEC	MANUF'S SPEC	-DO-	2	-	-	
		2.DIMENSIONS	MA	-DO-	-DO-	MFG. DRG./ MFG. SPEC.	MFG. DRG./ MFG. SPEC.	-DO-	2	-	-	
		3.CORRECTNESS COMPLETENESS TERMINATIONS/ MARKING/COLOUR CODE	MA	VISUAL	100%	MFG.SPEC./ RELEVANT IS	MFG.SPEC. RELEVANT IS	-DO-	2	-	-	
2.0	PAINTING	1.SHADE	MA	VISUAL	SAMPLE	MANUFR'S SPEC/BHEL SPEC./RELEVANT STANDARD	BHEL SPEC. SAME AS COL.7	LOG BOOK	2	-	-	
3.0	TESTS	1.ROUTINE TEST INCLUDING SPECIAL TEST AS PER BHEL SPEC.	MA	-DO-	100%	IS-325/ BHEL SPEC./ DATA SHEET	SAME AS COL.7	TEST REPORT	2	1		NOTE -1 & NOTE-3
		2.OVERALL DIMENSIONS & ORIENTATION	MA	MEASUREMENT & VISUAL	100%	APPROVED DRG/DATA SHEET	APPROVED DRG/DATA SHEET & RELEVANT IS	INSPN. REPORT	2	1	-	NOTE -1 & NOTE-3

BHEL	**PARTICULARS**	**BIDDER/VENDOR**
	NAME	
	SIGNATURE	

		QUALITY PLAN	CUSTOMER : NTPC			PROJECT TITLE	2x800MW KARIMNAGAR STPP (SG ISLAND)		SPECIFICATION : NUMBER :			
			BIDDER/ VENDOR :			QUALITY PLAN NUMBER PED-506-00-Q-006, REV-01			SPECIFICATION : TITLE :			
		SHEET 2 OF 2	SYSTEM			ITEM AC ELECT. MOTORS BELOW 55KW (LV)			SECTION			VOLUME III
SL. NO.	COMPONENT/OPERATION	CHARACTERISTICS CHECK	CAT.	TYPE/ METHOD OF CHECK	EXTENT OF CHECK	REFERENCE DOCUMENT	ACCEPTANCE NORM	FORMAT OF RECORD	AGENCY P	W	V	REMARKS
1	2	3	4	5	6	7	8	9	10			11
		3.NAMEPLATE DETAILS	MA	VISUAL	100%	IS-325 & DATA SHEET	IS-325 & DATA SHEET	INSPN. REPORT	2	1	-	

NOTES:

1 ROUTINE TESTS ON 100% MOTORS SHALL BE DONE BY THE VENDOR. HOWEVER, BHEL SHALL WITNESS ROUTINE TESTS ON RANDOM SAMPLES. THE SAMPLING PLAN SHALL BE MUTUALLY AGREED UPON

2 WHERE EVER CUSTOMER IS INVOLVED IN INSPECTION, (1) SHALL MEAN BHEL AND CUSTOMERS BOTH TOGETHER.

3 FOR EXHAUST/VENTILATION FAN MOTORS OF RATING UPTO 1.5KW , ONLY ROUTINE TEST CERTIFICATES SHALL BE FURNISHED FOR SCRUTINY.

Legends for Inspection agency

1. BHEL/CUSTOMER
2. VENDOR (MOTOR MANUFACTURER)
3. SUB-VENDOR (RAW MATERIAL/COMPONENTS SUPPLIER)

P. PERFORM
W. WITNESS
V. VERIFY

BHEL	**PARTICULARS**	**BIDDER/VENDOR**	
	NAME		
	SIGNATURE		
	DATE		BIDDER'S/VENDORS COMPANY SEAL

SUB – SECTION – B-01

MOTORS

CLAUSE NO.	TECHNICAL REQUIREMENTS

MOTORS

1.00.00 GENERAL REQUIREMENTS

1.01.00 For the purpose of design of equipment/systems, an ambient temperature of 50 deg. Centigrade and relative humidity of 95% (at 40 deg C) shall be considered. The equipment shall operate in a highly polluted environment.

1.02.00 All equipment's shall be suitable for rated frequency of 50 Hz with a variation of +3% & -5%, and 10% combined variation of voltage and frequency unless specifically brought out in the specification.

1.03.00 Contactor shall provide fully compatible electrical system, equipment's, accessories and services.

1.04.00 All the equipment, material and systems shall, in general, conform to the latest edition of relevant National and international Codes & Standards, especially the Indian Statutory Regulations.

1.05.00 The auxiliary AC voltage supply arrangement shall have 11kV, 3.3 kV and 415V systems and DC voltage shall be 220 V. It shall be designed to limit voltage variations as given below under worst operating condition :

(a) 11kV, 3.3 kV +/- 6%

(b) 415/240V +/- 10%

(c) 220 V DC -15% to +10%. However the nominal continuous DC power supply shall be 240V.

1.06.00 The voltage level for motors shall be as follows :-

a) Upto 0.2KW : Single phase 240V AC / 3 phase 415V AC

b) Above 0.2KW and upto 200KW : 3 phase 415V AC

c) Above 200KW and upto 1500 KW: 3.3 kV

d) Above 1500 KW : 11 kV

1.07.00 A.C. motors shall be fed from bus at above specified voltage level and fault level of 50 kA RMS (Max.) for 1 second. The 415V system shall be solidly grounded and 220 VDC system shall be isolated type.

1.08.00 Paint shade shall be as per RAL 5012 (Blue) for indoor and outdoor equipment.

1.09.00 The responsibility of coordination with electrical agencies and obtaining all necessary clearances for Contactors equipment and systems shall be under the Contactor scope.

CLAUSE NO.	TECHNICAL REQUIREMENTS

1.10.00 Degree of Protection

Degree of protection for various enclosures as per IS:4691, IEC60034-05 shall be as follows :-

i)	Indoor motors	-	IP 54
ii)	Outdoor motors	-	IP 55
iii)	Cable box-indoor area	-	IP 54
iv)	Cable box-Outdoor area	-	IP 55

2.00.00 CODES AND STANDARDS

1)	Three phase induction motors	:	IS:325, IEC:60034
2)	Single phase AC motors	:	IS:996, IEC:60034
3)	Crane duty motors	:	IS:3177, IEC:60034
4)	DC motors/generators	:	IS:4722, IEC:60034
5)	Energy Efficient motors	:	IS 12615, IEC:60034-30

3.00.00 TYPE

3.01.00 **AC Motors:**

a) Squirrel cage induction motor suitable for direct-on-line starting.

b) Continuous duty LT motors upto 160 KW Output rating (at 50 deg.C ambient temperature), shall be **Premium Efficiency class-IE3**, conforming to IS 12615, or IEC:60034-30.

c) Crane duty motors shall be slip ring/ squirrel cage Induction motor as per the requirement.

3.02.00 DC Motors Shunt wound.

4.00.00 RATING

(a) Continuously rated (S1). However, crane motors shall be rated for S4 duty, 40% cyclic duration factor.

(b) Whenever the basis for motor or driven equipment ratings are not specified in the corresponding mechanical specification sub-sections, maximum continuous motor ratings shall be at least 10% above the maximum load demand of the driven equipment under entire operating range including voltage and frequency variations.

CLAUSE NO.	TECHNICAL REQUIREMENTS
5.00.00	**TEMPERATURE RISE**
	Air cooled motors
	70 deg. C by resistance method for both thermal class 130(B) & 155(F) insulation.
	Water cooled
	80 deg. C over inlet cooling water temperature mentioned elsewhere, by resistance method for both thermal class 130(B) & 155(F) insulation.
	41 deg.C over inlet cooling water maximum temperature of 39 deg.C for thermal class Y wet wound Boiler circulation pump motor.
6.00.00	**OPERATIONAL REQUIREMENTS**
6.01.00	**Starting Time**
6.01.01	For motors with starting time upto 20 secs. at minimum permissible voltage during starting, the locked rotor withstand time under hot condition at highest voltage limit shall be at least 2.5 secs. more than starting time.
6.01.02	For motors with starting time more than 20 secs. and upto 45 secs. at minimum permissible voltage during starting, the locked rotor withstand time under hot condition at highest voltage limit shall be at least 5 secs. more than starting time.
6.01.03	For motors with starting time more than 45 secs. at minimum permissible voltage during starting, the locked rotor withstand time under hot condition at highest voltage limit shall be more than starting time by at least 10% of the starting time.
6.01.04	Speed switches mounted on the motor shaft shall be provided in cases where above requirements are not met.
6.02.00	**Torque Requirements**
6.02.01	Accelerating torque at any speed with the lowest permissible starting voltage shall be at least 10% motor full load torque.
6.02.02	Pull out torque at rated voltage shall not be less than 205% of full load torque. It shall be 275% for crane duty motors.
6.03.00	**Starting voltage requirement**
	(a) Up to 85% of rated voltage for ratings below 110 KW
	(b) Up to 80% of rated voltage for ratings from 110 KW to 200 KW
	(c) Up to 85% of rated voltage for ratings from 201 KW to 1000 KW
	(d) Up to 80% of rated voltage for ratings from 1001 KW to 4000 KW

(e) Up to 75 % of rated voltage for ratings above 4000KW

Except AOP & JOP motors running on D.G emergency supply, starting voltage shall be 80%.

7.00.00 DESIGN AND CONSTRUCTIONAL FEATURES

7.01.00 Suitable single phase space heaters shall be provided on motors rated 30KW and above to maintain windings in dry condition when motor is standstill. Separate terminal box for space heaters & RTDs shall be provided. However for flame proof motors , space heater terminals inside the main terminal box may be acceptable.

7.02.00 All motors shall be either Totally enclosed fan cooled (TEFC) or totally enclosed tube ventilated (TETV) or Closed air circuit air cooled (CACA) type. However, motors rated 3000KW or above can be Closed air circuit water cooled (CACW). CW motors can be screen protected drip proof (SPDP) type. Motors and EPB located in hazardous areas shall have flame proof enclosures conforming to IS:2148 as detailed below

(a)	Fuel oil area	:	Group – IIB
(b)	Hydrogen generation	:	Group - IIC or (Group-I, Div-II as per plant area NEC) or (Class-1, Group-B, Div-II as per NEMA /IEC60034)

7.03.00 Winding and Insulation

(a)	Type	:	Non-hygroscopic, oil resistant, flame resistant
(b)	Starting duty	:	Two hot starts in succession, with motor initially at normal running temperature.
(c)	11kV & 3.3 kV AC motors	:	Thermal class 155 (F) insulation. The winding insulation process shall be total Vacuum Presure Impregnated i.e resin poor method. The lightning Impulse & interturn insulation surge withstand level shall be as per IEC-60034 part-15.
(d)	240VAC, 415V AC & 220V DC motors	:	Thermal Class (B) or better

7.04.00 Motors rated above 1000KW shall have insulated bearings to prevent flow of shaft currents.

7.05.00 Motors with heat exchangers shall have dial type thermometer with adjustable alarm contacts to indicate inlet and outlet primary air temperature.

7.06.00 Noise level for all the motors shall be limited to 85dB(A) except for BFP motor for which the maximum limit shall be 90dB(A). Vibration shall be limited within the limits prescribed in IS:12075 / IEC 60034-14 . Motors shall withstand vibrations

	produced by driven equipment. HT motor bearing housings shall have flat surfaces, in both X and Y directions, suitable for mounting 80mmX80mm vibration pads.
7.07.00	In HT motors, at least four numbers simplex / two numbers duplex platinum resistance type temperature detectors shall be provided in each phase stator winding. Each bearing of HT motor shall be provided with dial type thermometer with adjustable alarm contact and preferably 2 numbers duplex platinum resistance type temperature detectors.
7.08.00	Motor body shall have two earthing points on opposite sides.
7.09.00	11 KV motors shall be offered with Separable Insulated Connector (SIC) as per IEEE 386. The offered SIC terminations shall be provided with protective cover and trifurcating sleeves. SIC termination kit shall be suitable for fault level of 25 KA for 0.17 seconds.
7.10.00	3.3 KV motors shall be offered with dust tight phase separated double walled (metallic as well as insulated barrier) Terminal box. Employer shall provide termination kit for the offered Terminal box. The offered Terminal Box shall be suitable for fault level of 250 MVA for 0.12 sec. Removable gland plates of thickness 3 mm (hot/cold rolled sheet steel) or 4 mm (non magnetic material for single core cables) shall be provided.
7.11.00	The spacing between gland plate & centre of terminal stud shall be as per Table-I.
7.12.00	All motors shall be so designed that maximum inrush currents and locked rotor and pullout torque developed by them at extreme voltage and frequency variations do not endanger the motor and driven equipment.
7.13.00	The motors shall be suitable for bus transfer schemes provided on the 11kV, 3.3 kV /415V systems without any injurious effect on its life.
7.14.00	For motors rated 2000 KW & above, neutral current transformers of PS class shall be provided on each phase in a separate neutral terminal box.
7.15.00	The size and number of cables (for HT motors) to be intimated to the successful Contactor during detailed engineering and the Contactor shall provide terminal box suitable for the same.
8.00.00	The ratio of locked rotor KVA at rated voltage to rated KW shall not exceed the following (without any further tolerance) except for BFP motor. (a) Below 110KW : 10.0 (b) From 110 KW & upto 200 KW : 9.0 (c) Above 200 KW & upto 1000KW : 10.0 (d) From 1001KW & upto 4000KW : 9.0

(e) Above 4000KW : 6 to 6.5

10.00.00 TYPE TEST

10.01.00 **HT MOTORS**

10.01.01 The Contactor shall carry out the type tests as listed in this specification on the equipment to be supplied under this contract. The Contactor shall indicate the charges for each of these type tests separately in the relevant schedule of Section - VII- (BPS) and the same shall be considered for the evaluation of the bids. The type tests charges shall be paid only for the test(s) actually conducted successfully under this contract and upon certification by the Employer's engineer.

10.01.02 The type tests shall be carried out in presence of the Employer's representative, for which minimum 15 days notice shall be given by the Contactor. The Contactor shall obtain the Employer's approval for the type test procedure before conducting the type test. The type test procedure shall clearly specify the test set–up, instruments to be used, procedure, acceptance norms, recording of different parameters, interval of recording, precautions to be taken etc. for the type test(s) to be carried out.

10.01.03 In case the Contactor has conducted such specified type test(s) within last ten years as on the date of bid opening, he may submit during detailed engineering the type test reports to the Employer for waival of conductance of such test(s). These reports should be for the tests conducted on the equipment similar to those proposed to be supplied under this contract and test(s) should have been either conducted at an independent laboratory or should have been witnessed by a client. The Employer reserves the right to waive conducting of any or all the specified type test(s) under this contract. In case type tests are waived, the type test charges shall not be payable to the Contactor.

10.01.04 Further the Contactor shall only submit the reports of the type tests as listed in "LIST OF TESTS FOR WHICH REPORTS HAVE TO BE SUBMITTED" and carried out within last ten years from the date of bid opening. These reports should be for the test conducted on the equipment similar to those proposed to be supplied under this contract and the test(s) should have been either conducted at an independent laboratory or should have been witnessed by a client. However if the Contactor is not able to submit report of the type test(s) conducted within last ten years from the date of bid opening, or in the case of type test report(s) are not found to be meeting the specification requirements, the Contactor shall conduct all such tests under this contract at no additional cost to the Employer either at third party lab or in presence of client/Employers representative and submit the reports for approval.

CLAUSE NO.	TECHNICAL REQUIREMENTS

10.01.05 **LIST OF TYPE TESTS TO BE CONDUCTED**

The following type tests shall be conducted on each type and rating of HT motor

(a) No load saturation and loss curves upto approximately 115% of rated voltage

(b) Measurement of noise at no load.

(c) Momentary excess torque test (subject to test bed constraint).

(d) Full load test(subject to test bed constraint)

(e) Temperature rise test at rated conditions. During heat run test, bearing temp., winding temp.,coolant flow and its temp. shall also be measured. In case the temperature rise test is carried at load other than rated load,

specific approval for the test method and procedure is required to be obtained. Wherever ETD's are provided, the temperature shall be measured by ETD's also for the record purpose.

10.01.06 **LIST OF TESTS FOR WHICH REPORTS HAVE TO BE SUBMITTED**

The following type test reports shall be submitted for each type and rating of HT motor

(a) Degree of protection test for the enclosure followed by IR, HV and no load run test.

(b) Terminal box-fault level withstand test for each type of terminal box of HT motors only.

(c) Lightning Impulse withstand test on the sample coil shall be as per clause no. 4.3 IEC-60034, part-15

(d) Surge-withstand test on interturn insulation shall be as per clause no. 4.2 of IEC 60034, part-15

10.02.00 **LT Motors**

10.02.01 LT Motors supplied shall be of type tested design. During detailed engineering, the Contactor shall submit for Employer's approval the reports of all the type tests as listed in this specification and carried out within last *ten* years from the date of bid opening. These reports should be for the test conducted on the equipment similar to those proposed to be supplied under this contract and the test(s) should have been either conducted at an independent laboratory or should have been witnessed by a client.

CLAUSE NO.	TECHNICAL REQUIREMENTS
10.02.02	However if the Contactor is not able to submit report of the type test(s) conducted within last ten years from the date of bid opening, or in the case of type test report(s) are not found to be meeting the specification requirements, the Contactor shall conduct all such tests under this contract at no additional cost to the Employer either at third party lab or in presence of client/Employers representative and submit the reports for approval.
10.02.03	**LIST OF TESTS FOR WHICH REPORTS HAVE TO BE SUBMITTED** **The following type test reports shall be submitted for each type and rating of LT motor of above 50 KW only** 1. Measurement of resistance of windings of stator and wound rotor. 2. No load test at rated voltage to determine input current power and speed 3. Open circuit voltage ratio of wound rotor motors (in case of Slip ring motors) 4. Full load test to determine efficiency power factor and slip . 5. Temperature rise test . 6. Momentary excess torque test. 7. High voltage test . 8. Test for vibration severity of motor. 9. Test for noise levels of motor(Shall be limited as per clause no 7.06.00 of this section) 10. Test for degree of protection and 11. Overspeed test. 12. Type test reports for motors located in fuel oil area having flame proof enclosures as per IS 2148 / IEC 60079-1
10.03.00	All acceptance and routine tests as per the specification and relevant standards shall be carried out. Charges for these shall be deemed to be included in the equipment price.
10.04.00	The type test reports once approved for any projects shall be treated as reference. For subsequent projects of NTPC, an endorsement sheet will be furnished by the manufacturer confirming similarity and “No design Change”. Minor changes if any shall be highlighted on the endorsement sheet.

TABLE - I

DIMENSIONS OF TERMINAL BOXES FOR LV MOTORS

Motor MCR in KW	Minimum distance between centre of stud and gland plate in mm
UP to 3 KW	As per manufacturer's practice.
Above 3 KW - upto 7 KW	85
Above 7 KW - upto 13 KW	115
Above 13 KW - upto 24 KW	167
Above 24 KW - upto 37 KW	196
Above 37 KW - upto 55 KW	249
Above 55 KW - upto 90 KW	277
Above 90 KW - upto 125 KW	331
Above 125 KW-upto 200 KW	203

For HT motors the distance between gland plate and the terminal studs shall not be less than 500 mm.

PHASE TO PHASE/ PHASE TO EARTH AIR CLEARANCE:

NOTE: Minimum inter-phase and phase-earth air clearances for LT motors with lugs installed shall be as follows:

Motor MCR in KW	Clearance
UP to 110 KW	10mm
Above 110 KW and upto 150 KW	12.5mm
Above 150 KW	19mm

SECTION- IIC

GENERAL TECHNICAL REQUIREMENTS (C&I)

MEASURING INSTRUMENTS (PRIMARY & SECONDARY)

MEASURING INSTRUMENTS (PRIMARY AND SECONDARY)

Measuring instruments/equipment and subsystems offered by the Bidder shall be from reputed experienced manufacturers of specified type and range of equipment, whose guaranteed and trouble free operation has been proven. Refer Sub-section Basic Design Criteria. Further, all instruments shall be of proven reliability, accuracy, and repeatability requiring a minimum of maintenance and shall comply with the acceptable international standards and shall be subject to Employer's approval.

Every panel-mounted instrument requiring power supply shall be provided with easily replaceable glass cartridge fuses of suitable rating. Every instrument shall be provided with a grounding terminal and shall be suitably connected to the panel grounding bus.

All transmitters, sensors, switches and gauges for parameters like pressure, temperature, level, flow etc. as required for the safe and efficient operation and maintenance as well as for operator and management information (including all computation) of equipment in the system under the scope of specification shall be provided on as required basis with in quoted lump sum price.The Contractor shall furnish all Instrumentation / Control equipment & accessories under this specification as per technical specification, ranges, makes & model as approved by the Employer during detailed engineering.

The necessary root valves, impulse piping, drain cocks, gauge-zeroing cocks, valve manifolds and all the other accessories required for mounting/erection of these local instruments shall be furnished, even if not specifically asked for, on as required basis. The contacts of equipment mounted instruments, sensors, switches etc. for external connection including spare contacts shall be wired out in flexible/rigid conduits, independently to suitably located common junction boxes. The proposal shall include the necessary cables, flexible conduits, junction boxes and accessories for the above purpose. Double root valves shall be provided for all pressure tapping where the pressure exceeds 40 Kg./sq.cm.

All instruments envisaged for sea water applications, shall be provided with wetted parts made of Monel/ Hastelloy C or any other material (if provenness experience of the proposed material for such applications is established by contractor).

For coastal areas, all instruments shall be provided with durable epoxy coating for housings and all exposed surfaces of the instruments.

SPECIFICATION FOR ELECTRONIC TRANSMITTERS

SPECIFICATION FOR ELECTRONIC TRANSMITTER FOR PRESSURE, DIFF PRESS AND DP BASED FLOW / LEVEL MEASUREMENTS

Sl.No.	Features	Essential/Minimum Requirements
1.	Type of Transmitter	Microprocessor based 2 wire type, Hart protocol compatible.
2.	Accuracy	± 0.1% of calibrated span (minimum)

3.	Output signal range	4-20 mA DC (Analog) along with superimposed digital signal (based on HART protocol)
4.	Turn down ratio (minimum)	10:1 for vacuum/very low pressure applications. (i.e .pressure <=200mmWC). 5:1 for very high pressure application. (i.e. pressure >=200Kg/cm2). 30:1 for other applications.
5.	Stability	± 0.1% of calibrated span for six months for Ranges up to and including70 Kg/cm². ± 0.25% of calibrated span for six months for Ranges more than 70 Kg/cm² .
6.	Zero and span drift	+/- 0.015% per deg.C at max span. +/-0.11% per deg.C at min. Span.
7.	Load impedance	500 ohm (min.)
8.	Housing	Weather proof as per IP-65, metallic housing with durable corrosion resistant coating.
9.	Over Pressure	150% of max. Operating pressure
10.	Connection (Electrical)	Plug and socket type
11.	Process connection	1/2 inch NPT (F)
12.	Span and Zero	Continuous, tamper proof, Remote as well as manual adjustability from instrument with zero suppression and elevation facility.
13.	Accessories	-Diaphragm seal, pulsation dampeners, syphon etc. as required by service and operating condition. -2 valve manifold for absolute & Gauge pressure transmitters, 3-valve and 5 valve manifold for DP/Level/Flow applications. The valve manifold shall be non integral type (except Fuel Oil area). -For hazardous area, explosions proof enclosure as described in NEC article 500. Mounting: 2 inch pipe mounting.
14.	Diagnostics & display	Self-Indicating feature and digital display on transmitter
15.	Power supply	24V DC ± 10%.
16.	Adjustment/calibration/maintenance	From hand held calibrator/centralized PC based system (as applicable).

Notes

For primary air/ secondary air/flue gas applications, DP type transmitters shall be provided for pressure measurement.

LVDT type is not acceptable.

Where the process fluids are corrosive, viscous, solid bearing or slurry type, diaphragm seals shall be provided. Parts below the diaphragm shall be removable for cleaning. The entire volume above the diaphragm shall be completely filled with an inert liquid suitable for the application.

GUIDED WAVE RADAR TYPE LEVEL TRANSMITTER

Type	Microprocessor based 2 wire type, HART protocol compatible Guided wave radar transmitter.
Principle	TDR (Time domain reflectometry)
Probe Type & Material	(i) Coaxial probe of SS316/316L. If required, probe shall be suitable for overfill prevention. (ii) Rod probe, cable probe of SS316/SS316L can be used for applications wherever coaxial probe is not suitable.
Output signal	4-20 mA DC along with superimposed digital signal (based on HART protocol), suitable for over fill prevention.
Accuracy	+/- 0.5% of calibrated span or minimum 5mm.
Power supply	24 VDC +/- 10%.
Housing	Weather proof as per IP-65, metallic housing with durable corrosion resistance coating.
Adjustment/ calibration	Using hand held HART calibrator/ centralized PC based system (as applicable).
Zero & span adjustment	Continuous, temper proof, remote as well as manual adjustability from instrument. It should be possible to calibrate the instrument without

Notes :-

1) Where the process fluids are corrosive, viscous, solid bearing or slurry type, diaphragm seals shall be provided. Parts below the diaphragm shall be removable for cleaning. The entire volume above the diaphragm shall be completely filled with an inert liquid suitable for the application.

2) Pressure/ Diff pressure switches for very low press/ DP measurements can have sensor material other than SS316 in case of any technical limitation and the offered product is standard product of the manufacture for very low pressure applications..

3) Repeatability can be upto +/-1% of full range in case of switches with diaphragm seals or very low pressure/DP range.

4) The specifications of switches for air conditioning & ventilation system / process can be as per system manufacturer's standards. The manufacturer shall submit the adequate supporting documents for establishing their standard practice.

16.00.00 **NOT USED**

17.00.00 **SOLENOID VALVES**

Solenoid valves shall fulfil the following requirements:

a. Type 2/3/4 way SS 316/Forged Brass (depending on the application subject to Employer's approval during detailed Engg.)

b. Power supply 24 V DC ± 10%.

c. Plug and socket electrical connection.

d. Insulation : Class 'H'

18.00.00 **REVERSE ROTATION INDICATOR (RRI)**

Reverse rotation indicator comprising of proximity sensors, processing electronics with output of 4-20mA (corresponding to speed) interconnecting cables, speed display in rpm, normal, reverse indication and required channel alarm contact shall be provided. The contact rating shall be 60VDC, 6VA (or more if required by Control system). The exact details of the RRI shall be strictly as approved by Employer during detailed engineering. The power supply of RRI is to be arranged by the Bidder

19.00.00 **NOT USED**

19.05.00 **Electronic Flow-Meter**

The electronic flow meter shall include flow sensor and flow indicator cum integrator / totaliser and shall include all required accessories for satisfactory operation. The flow meter shall be based on full bore ultrasonic / electromagnetic principle and shall be electronic type of proven design, make and model acceptable to the owner.

SPECIFICATIONS FOR PR. GAUGE, D.P. GAUGE, TEMP. GAUGE AND LEVEL GAUGE.

Sl. No	FEATURES	ESSENTIAL/MINIMUM REQUIREMENTS		
		Pr. Gauge/ DP Gauge/ Draught gauges	Temperature Gauge	Level Gauge
1	Sensing Element and material	Bourdon for high pressure, Diaphragm/Bellow for low pr. Of 316 SS	Mercury in steel for below 450°C and inert gas actuated for above 450°C of SS bulb and capillary.	Tempered * toughened Borosilicate gauge glass steel armoured reflex or transparent type.
2	Body material	Die-cast aluminium	Die-cast aluminium	Forged carbon steel/304 SS
3	Dial size	150mm	150 mm	Tubular covering entire range
4	End connection	1/2 inch NPT (M)	3/4" NPT (M)	Process connection as per ASME PTC and drain/vent 15 NB
5	Accuracy	±1% of span	± 1% of span	± 2%
6	Scale	Linear, 270° arc graduated in metric units	Linear, 270° arc graduated in °C	Linear vertical
7	Range selection	Cover 125% of max. of scale	Cover 125% of max. of scale	Cover 125% of max. of scale
8	Over range test	Test pr. for the assembly shall be1.5 to the max. Design pr. at 38°C.		
9	Housing	Weather and dust proof as per IP-55	Weather and dust proof as per IP-55	CS/304 SS leak proof
10	Zero/span adjustment	Provided	Provided	--
11	Identification	Engraved with service legend or laminated phenolic name plate		

12	Accessories	Blow out disc, siphon, snubber, pulsation dampener, chemical seal (if required by process) gauge isolation valve	SS Thermowell	Gasket for all KEL-F shield for transparent type vent and drain valves of Steel/SS as per CS/Alloy process Requirement.
13	Material of Bourdon/ movement	316 SS / 304 SS	316 SS / 304 SS	

Notes:-

*Bicolour type level gauges will be provided for applications involving steam and water except for condensate and feed water services.

Length of gauge glass shall not be more than 1400 mm. If the vessel is higher, multiple gauge glasses with 50 mm overlapping shall be provided.

Where the process fluids are corrosive, viscous, solid bearing or slurry type, diaphragm seals shall be provided. Parts below the diaphragm shall be removable for cleaning. The entire volume above the diaphragm shall be completely filled with an inert liquid suitable for the application.

FORM NO. PEM-6666-0

	SPECIFICATION FOR MOTORISED VALVE ACTUATOR	SPECIFICATION NO.: PE-SS-999-145-I007
		VOLUME II B
		SECTION D
		REV. NO. 01 DATE: 09.02.17
		SHEET 1 OF 3

Data Sheet A & B

DATA SHEET-A (TO BE FILLED BY PURCHASER)			DATA SHEET-B (TO BE FILLED-UP BY BIDDER)
GENERAL*	* PROJECT	2 X 800 MW KARIMNAGAR TPP	
	OFFER REFERENCE		
	* TAG NO. SERVICE		
	* DUTY	☐ ON / OFF ☐ INCHING	
	* LINE SIZE (inlet/outlet): MATERIAL		
	* VALVE TYPE	☐ GLOBE ☐ GATE ☐ REG. GLOBE ☐ BUTTERFLY	
	* OPENING / CLOSING TIME		
	* WORKING PRESSURE		
	AMBIENT CONDITION	SHALL BE SUITABLE FOR CONTINUOUS OPERATION UNDER AN AMBIENT TEMP. OF 0-55 DEG C AND RELATIVE HUMIDITY OF 0-95%	
	VALVE SEAT TEST PRESS	BIDDER TO SPECIFY	
	REQUIRED VALVE TORQUE	BIDDER TO SPECIFY	
	ACTUATOR RATED TORQUE	BIDDER TO SPECIFY	
CONSTRUCTION AND SIZING	CONSTRUCTION	TOTALLY ENCLOSED, WEATHER PROOF, IP:55	
	MECHANICAL POSITION INDICATOR	TO BE PROVIDED FOR 0-100% TRAVEL	
	BEARINGS	DOUBLE SHIELDED, GREASE LUBRICATED ANTI-FRICTION.	
	GEAR TRAIN FOR LIMIT SWITCH/TORQUE SWITCH OPERATION	METAL (NOT FIBRE GEARS). SELF-LOCKING TO PREVENT DRIFT UNDER TORQUE SWITCH SPRING PRESSURE WHEN MOTOR IS DE-ENERGIZED.	
	SIZING	OPEN/CLOSE AT RATED SPEED AGAINST DESIGNED DIFFERENTIAL PRESSURE AT 90% OF RATED VOLTAGE. FOR ISOLATING SERVICE THREE SUCCESSIVE OPEN-CLOSE OPERATIONS OR 15 MINS. WHICHEVER IS HIGHER. **FOR INCHING SERVICE - 150 STARTS/HR MINIMUM & FOR REGULATING SERVICE - 3000 STARTS/HR MINIMUM.**	
HANDWHEEL	* REQUIRED	■ YES ☐ NO	
	* ORIENTATION	☐ TOP MOUNTED ☐ SIDE MOUNTED	
	*TO DISENGAGE AUTOMATICALLY DURING MOTOR OPERATION.		
ELECTRIC ACTUATOR	ACTUATOR MAKE/MODEL	BIDDER TO SPECIFY	
	MOTOR MAKE / MODEL / TYPE / RATING (KW)	BIDDER TO SPECIFY	
	@ MOTOR TYPE	SQUIRREL CAGE INDUCTION MOTOR, STARTING CURRENT LIMITED TO SIX TIMES THE RATED CURRENT-INCLUSIVE OF LS. TOLERANCE	
	ACTUATOR APPLICABLE WIRING DIAGRAM	■ ENCLOSED (BIDDER TO CONFIRM) A: ☐ DRG. NO. 3-V-MISC-24227 R00 B: ☐ DRG. NO. 3-V-MISC-24550 R00 C: ■ DRG. NO. 3-V-MISC-24283 R00 D: ☐ DRG. NO. 4-V-MISC-90271 R11 E: ☐ For Thyristor based Integral starter, Bidder/Vendor to furnish wiring diagram	
	COLOUR SHADE	■ BLUE (RAL 5012) ☐ …….	
	PAINT TYPE **(## Refer Notes)**	■ ENAMEL ☐ EPOXY ☐ …….	
	SHAFT RPM	BIDDER TO SPECIFY	
	OLR SET VALUE	BIDDER TO SPECIFY	
	@ STARTING / FULL LOAD CURRENT	BIDDER TO SPECIFY	
	NO. OF REV FOR FULL TRAVEL	BIDDER TO SPECIFY	
	@ PWR SUPP TO MTR / STARTER	415V,+/- 10% 3PH,3 WIR 50 HZ+/-5%	
	@ CONTROL VOLTAGE REQUIREMENT	TO BE DERIVED FROM THE POWER SUPPLY TO THE STARTER ☐ 230 V ■ 110 V AC /24V DC	

	SPECIFICATION FOR MOTORISED VALVE ACTUATOR	SPECIFICATION NO.: PE-SS-999-145-I007
		VOLUME II B
		SECTION D
		REV. NO. 01 DATE: 09.02.17
		SHEET 2 OF 3

Data Sheet A & B

DATA SHEET-A (TO BE FILLED BY PURCHASER)			DATA SHEET-B (TO BE FILLED-UP BY BIDDER)
	@ ENCLOSURE CLASS OF MOTOR	IP 67 FOR OUTDOOR & IP55 FOR INDOOR(TOTALLY ENCLOSED SELF VENTILATED)	
	@ INSULATION CLASS	CLASS-F TEMP. RISE LIMITED TO CLASS-B	
	@ WINDING TEMP PROTECTION	■ THERMOSTAT (3 Nos.,1 IN EACH PHASE) ☐ ----------	
	SINGLE PHASE / WRONG PHASE SEQUENCE PROTECTION	REQUIRED	
INTEGRAL STARTER	INTEGRAL STARTER	■ REQUIRED ☐ NOT REQUIRED	
	TYPE OF SWITCHING DEVICE	■ CONTACTORS ☐ THYRISTORS	
	TYPE	■ CONVENTIONAL ☐ SMART (NON-INTRUSIVE)	
	IF SMART	NOT APPLICABLE	
	a) SERIAL LINK INTERFACE	☐ INTEGRAL ☐ FIELD MOUNTED	
	b) SERIAL LINK PROTOCOL	☐ FOUNDATION FIELD-BUS ☐ PROFI-BUS ☐ DEVICE NET ☐……	
	c) SERIAL LINK MEDIA	☐ TWISTED PAIR Cu-CBL ☐ CO-AXIAL Cu-CBL ☐ OFC	
	d) HAND HELD PROGRAMMER	☐ REQUIRED ☐ NOT REQUIRED	
	e) TYPE OF HAND HELD PROGRAMMER	☐ BLUETOOTH ☐ INFRARED ☐.....	
	f) MASTER STATION	☐ REQUIRED ☐ NOT REQUIRED	
	g) MASTER STN INTRFACE WITH DCS	☐ MODBUS ☐ TCP/IP	
	h) DETAILS OF SPECIAL CABLE	☐ ENCLOSED ☐ NOT REQUIRED	
	STEP DOWN CONT. TRANSFORMER	■ REQUIRED	
	OPEN / CLOSE PB	■ REQUIRED ☐ NOT REQUIRED	
	STOP PB	■ REQUIRED ☐ NOT REQUIRED	
	INDICATING LAMPS	■ REQUIRED ☐ NOT REQUIRED	
	LOCAL REMOTE S/S	■REQUIRED ☐ NOT REQUIRED	
	STATUS CONTACTS FOR MONITORING	■ REQUIRED ☐ NOT REQUIRED	
	INTEGRAL STARTER DISTURBED SIGNAL	REQUIRED (O/L RELAY OPERATED, CONT./POWER SUPPLY FAILED, S/S IN LOCAL, TORQUE SWITCH OPTD. MID WAY)	
INTERPOSING RELAY/OPTO COUPLER (Applicable for integral Starter)	TYPE OF ISOLATING DEVICE	■ INTERPOSING RELAY ☐ OPTO COUPLER ☐ EITHER	Also refer note no. 8
	QUANTITY	■ 2 NOs. ☐ 3 NOs.	
	DRIVING VOLTAGE	■ 20.5 – 24V DC ☐ _____V DC	
	DRIVING CURRENT	■ 125mA MAX ☐ _____mA MAX	
	LOAD RESISTANCE	■ > 192 ohms - <25 k ohms ☐ > _____ohms - < _____ohms	
TORQUE SWITCH (Not Applicable for Smart Actuator) **($$ Refer Notes)**	MFR & MODEL NO.	BIDDER TO SPECIFY	
	OPEN / CLOSE	■1 No. ☐2Nos. / ■1 No. ☐2Nos	
	CONTACT TYPE	2 NO + 2 NC	
	RATING	5A 240V AC AND 0.5A 220V DC	
	CALIBRATED KNOBS(OPEN&CLOSE TS)	REQUIRED FOR SETTING DESIRED TORQUE	
	ACCURACY	+3% OF SET VALUE	
LIMIT SWITCH (Not Applicable for Smart Actuator) **($$ Refer Notes)**	MFR & MODEL NO.	BIDDER TO SPECIFY	
	OPEN : INT : CLOSE	■1 No ☐2 Nos. / 2 Nos. (ADJ.) / ■1 No. ☐2Nos.	
	CONTACT TYPE	2 NO + 2 NC	
	RATING (AC / DC)	5A 240V AC AND 0.5A 220V DC	

FORM NO. PEM-6666-0

	SPECIFICATION FOR MOTORISED VALVE ACTUATOR	SPECIFICATION NO.: PE-SS-999-145-I007	
		VOLUME II B	
		SECTION D	
		REV. NO. 01	DATE: 09.02.17
		SHEET 3 OF 3	

Data Sheet A & B

DATA SHEET-A (TO BE FILLED BY PURCHASER)	DATA SHEET-B (TO BE FILLED-UP BY BIDDER)

Limit switched shall be silver plated with high conductivity and non-corrosive type. Contact rating shall be sufficient to meet the requirement of control system subject to minimum of 60 V, 6 A rating .protection class shall be IP 55

POSITION TRANSMITTER	POSITION TRANSMITTER (For inching duty & other specific applications)	■ REQUIRED ☐ NOT REQUIRED	
	MFR & MODEL NO.	BIDDER TO SPECIFY	
	TYPE	☐ ELECTRONIC (2 WIRE) R/I CONVERTER ■ ELECTRONIC (2 WIRE) CONTACTLESS	
	SUPPLY	■ 24V DC ☐ ……	
	OUTPUT	■ 4-20mA	
	ACCURACY	± 1% FS	
SPACE HEATER	@SPACE HEATER	REQUIRED	
	@ POWER SUPPLY (NON INTEGRAL)	230V AC,1 PH.,50 Hz	
	@ POWER SUPPLY (INTEGRAL)	BIDDER TO SPECIFY	
	@ RATING		
TERMINAL BOX	ACTUATOR/MOTOR TERMINAL BOX	REQUIRED	
	ENCL CLASS ACTUATOR/MOTOR T.B.	@■ IP 68 @☐……	
	@ EARTHING TERMINAL	REQUIRED	
	PLUG & SOCKET(9 PIN) (FOR COMMD, LS/TS FEED BACK, PoT)	■ REQUIRED ☐ NOT REQUIRED☐ ■ 2 NOS. ☐ ----------	
CABLE GLANDS	@ POWER CABLE GLAND	SIZE:----------	
	@ SPACE HEATER CABLE GLAND	SIZE:----------	
	OTHER CONTROL CABLE GLANDS-1	☐ 1No. for BFV of CW PUMP(Cable size 2Px1.5mm2)	
	OTHER CONTROL CABLE GLANDS-2	2 nos. 4 P x .5 mm2	
WEIGHT	TOTAL WEIGHT (ACTUATOR + ACCESSORIES)	BIDDER TO SPECIFY	_____ Kg.

NOTES:

1. **SCOPE**: DESIGN, MANUFACTURE, INSPECTION, TESTING AND DELIVERY TO SITE OF ELECTRIC ACTUATOR FOR INCHING OR OPEN / CLOSE DUTY.
2. **CODES & STANDARDS**: DESIGN AND MATERIALS USED SHALL COMPLY WITH THE RELEVANT LATEST NATIONAL AND INTERNATION STANDARD. AS A MINIMUM, THE FOLLOWING STANDARDS SHALL BE COMPLIED WITH:
   IS-9334, IS-2147, IS-2148, IS-325, IS-2959, IS-4691 AND IS-4722
3. TEMPERATURE RISE SHALL BE RESTRICTED TO 70 DEG. C FOR AMBIENT TEMPERATURE OF 50 DEG C.
4. CABLE GLANDS OF DOUBLE COMPRESSION TYPE, BRASS MATERIAL SHALL BE PROVIDED.
5. THE TORQUE SWITCHES SHALL BE PROVIDED WITH MECHANICAL LATCHING DEVICE TO PREVENT OPERATION WHEN UNSEATING FROM THE END POSITIONS. THE LATCHING DEVICE SHALL UNLATCH AS SOON AS THE VALVE LEAVES THE END POSITION. IF SUCH PROVISION IS NOT POSSIBLE, THE TORQUE SWITCHES SHALL BE BYPASSED BY END-POSITION LIMIT SWITCHES WHICH OPENS ON VALVE LEAVING END POSITION.THESE LIMIT SWITCHES ARE ADDITIONAL TO THE NUMBER OF LIMIT SWITCHES SPECIFIED ELSEWHERE.
6. THE MOTOR SHALL OPERATE SATISFACTORILY UNDER THE +/- 10% SUPPLY VOLTAGE VARIATION AT RATED FREQUENCY, -5% TO +3% VARIATION IN FREQUENCY AT RATED SUPPLY VOLTAGE, SIMULTANEOUS VARIATION IN VOLTAGE & FREQUENCY THE SUM OF ABSOLUTE PERCENTAGE NOT EXCEEDING 10%.
7. THE MOTOR SHALL BE SUITABLE FOR DIRECT ON LINE STARTING.

$$ TORQUE SWITCH & LIMIT SWITCH SHALL ACT INDEPENDENT OF EACH OTHER. TANDEM OPERATION IS NOT ACCEPTABLE.
EPOXY PAINT IS RECOMMENDED FOR COASTAL AREAS.
8. In case suppliers standard control voltage for open/close contactor is 110 V AC, the same is acceptable if suitable opto isolation circuit is provided with coupling relays for 24 V DC command inputs.
9. It shall be possible to operate actuator locally. Lockable remote/local selection shall be provided on actuator.
10. Position indicator shall be provided for 0-100 % travel.
11. Wiring shall be suitable voltage grade copper wire.

	PREPARED BY	CHECKED BY	APPROVED BY	VENDOR COMPANY SEAL
NAME	ANUJ WADHWA	CHETAN MALIK	M.A.MANSOORI	NAME
SIGNATURE				SIGNATURE
DATE	20.06.2013	20.06.2013	20.06.2013	DATE

NOTES* = TO BE FILLED BY MPL (LEAD AGENCY). @= TO BE FILLED BY ES

ALL DIMENSIONS ARE IN MILLIMETRES. FOR TOLERANCES OF UNTOLERANCED DIMENSIONS DURING MANUFACTURE REFER RELEVANT QCP / QP.

DRAWING NO. 3-V-MISC-24283

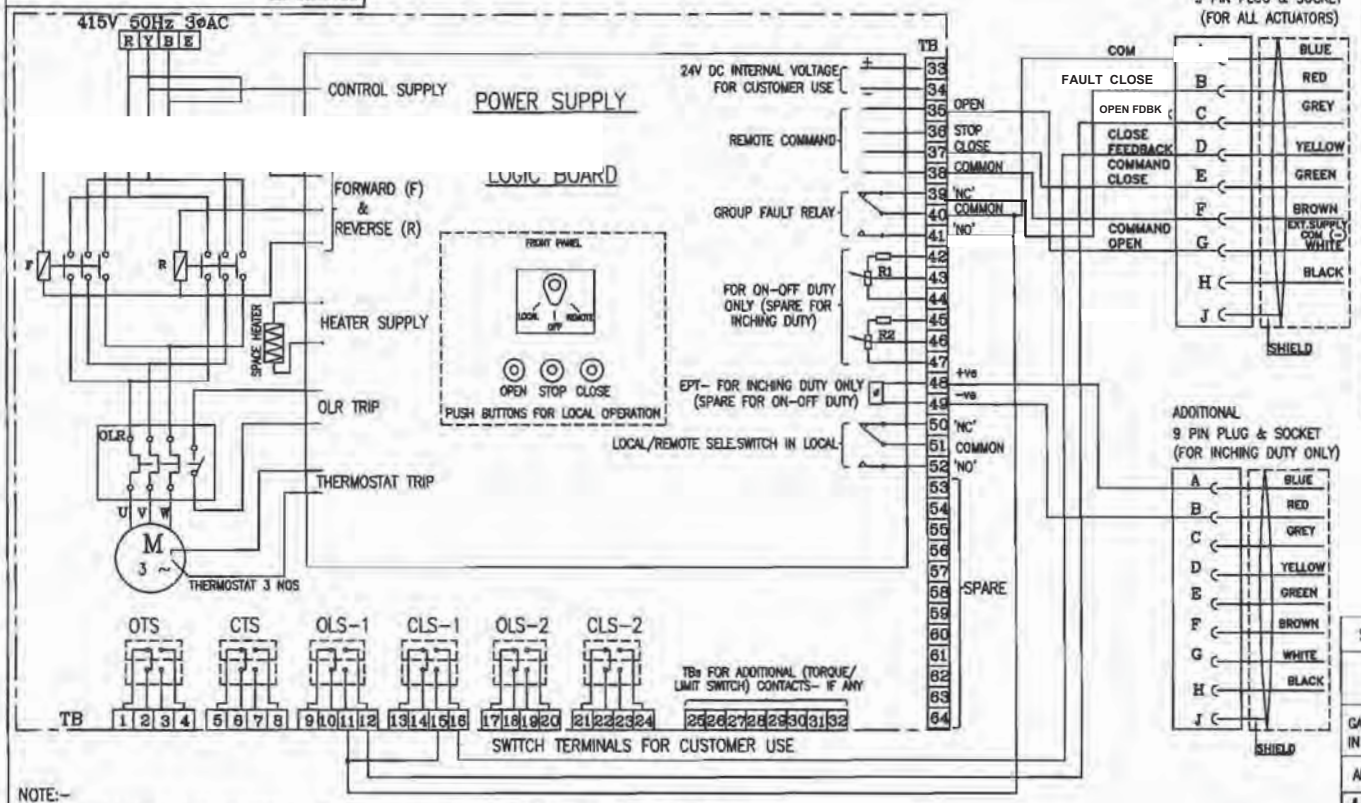

CONTACT DEVELOPMENT DIAGRAM

OTS	1-2	OPEN AT OVER TORQUE DURING OPENING TRAVEL
	3-4	CLOSE AT OVER TORQUE DURING OPENING TRAVEL
CTS	5-6	OPEN AT OVER TORQUE DURING CLOSING TRAVEL
	7-8	CLOSE AT OVER TORQUE DURING CLOSING TRAVEL
OLS-1	9-10	
	11-12	
CLS-1	13-14	
	15-16	
OLS-2	17-18	
	19-20	
CLS-2	21-22	
	23-24	

SWITCH TERMINAL NO.	FULL OPEN	a	INTERMEDIATE	b	FULL CLOSE
	VALVE POSITION				

——— INDICATES CONTACT CLOSED

- - - - - INDICATES CONTACT OPEN

CONTACT RATING: 5A AT 250V AC & 0.5A AT 220V DC

SETTING PROCEDURE OF POSITION LIMIT AND TORQUE SWITCH

VALVES	OPEN		CLOSE	
	MAIN	BACK UP	MAIN	BACK UP
GATE VALVE OF100 mm AND ABOVE IN 1500 CL AND ABOVE RATINGS	OLS	OTS *	CLS	CTS
ALL OTHER GATE & GLOBE VALVES	OLS	OTS *	CTS	#

- CLS NOT TO BE CONNECTED IN TRIP CIRCUIT

* - BYPASS OTS FOR INITIAL 5% OF TRAVEL(FOR GATE VALVES ONLY)

NOTE:-

1. ALL TORQUE AND LIMIT SWITCHES (OTS,CTS,OLS1&2, CLS1&2) ARE WITH 2NO+2NC CONTACTS '1NO+1NC' IS TERMINATED IN TBS 1-24, REMAINING CONTACTS ARE FOR INTERNAL USE. ANY SPARE CONTACTS WHICH ARE NOT USED INTERNALLY ARE TO BE TERMINATED IN TBS 25-32
2. CTS - TORQUE SWITCHES FOR CW ROTATION (CLOSE)
3. OTS - TORQUE SWITCHES FOR CCW ROTATION (OPEN)
4. OLS-1, OLS-2 - LIMITSWITCHES FOR POSITION OPEN
5. CLS-1, CLS-2 - LIMITSWITCHES FOR POSITION CLOSE
6. EPT - ELECTRONIC POSITION TRAMSMITTER (CONTACTLESS TYPE, FOR INCHING DUTY)
7. R1-R2-POTENTIOMETER 2 x 100 OHMS (FOR ON-OFF DUTY)
8. FOR COMMANDS & EPT EITHER INTERNALLY GENERATED 24 VDC OR EXTERNAL SUPPLY OF 24VDC CAN BE USED
9. M - MOTOR 3ø 415V 50 Hz AC SUPPLY
10. TORQUE SWITCH BYPASS WITH LIMITSWITCH BOTH ON OPEN & CLOSE DIRECTION TO BE DONE INTERNALLY.

REV	DATE	ALTERED
		CHD & APPD

CAUTION: The information on this document is the property of BHARAT HEAVY ELECTRICALS LTD. It must not be used directly or indirectly in any way detrimental to the interest of the company.

TYPE OF PRODUCT OR NAME OF CUSTOMER/PROJECT: ELECTRICAL VALVE ACTUATORS (AC) WITH INTEGRAL STARTERS

BHARAT HEAVY ELECTRICALS LTD., UNIT: HIGH PRESSURE BOILER PLANT. TIRUCHIRAPALLI-620014.

365-121

	NAME	SIGN	DATE	NO.OF VAR.
DRN	N.P.ESWAR	N.P	17.03.05	-
CHD	D.DINAKARAN	D.D	17.03.05	
APPD	K.ARUNACHALAM	K.A	17.03.05	

DEPT VL.	SCALE	WEIGHT (KG).	REFERENCE INFORMATIONS	NO. OF ITEMS
CODE -	NTS	-		-

TITLE: WIRING DIAGRAM (TERMINAL PLAN) FOR ACTUATOR WITH INTEGRAL STARTER WITH PLUG & SOCKET FOR NTPC PROJECTS

CARD CODE: U 01

DRAWING NO. 3-V-MISC-24283 Page 5 of 6

REV 0

Size A3

SPECIFICATION OF LCP

	SPECIFICATION FOR LOCAL PANELS	SPECIFICATION NO.: PES – 145 – 054A	
		VOLUME II B	
		SECTION D	
		REV. NO. 02	DATE : 22-02-2008
		SHEET 1 OF 5	

1.0 SCOPE

This specification covers the Design, Manufacture, Inspection and Testing at the manufacturer's works, proper packing for transportation and delivery to site of Local Panels required for control and monitoring of the Auxiliary Plant & Equipment.

2.0 CODES AND STANDARDS

2.1 All the equipments specified herein shall comply with the requirements of the latest issue of the relevant National and International standards.

2.2 As a minimum requirement, the following standards shall be complied with:

a)	IS-6005 : 1970	:	Code of practice for phosphating of iron and steel.
b)	IS-5 : 1978	:	Colours for ready mixed paints and enamels.
c)	IS-1248:1983	:	Direct Acting Indicating Instruments.
d)	IS-13947 (Part-III):1993	:	Rotary Cam Switches.
e)	IS-6875:1973	:	Auxiliary relays.
f)	IS-8828:1993	:	Circuit breaker for household and similar installations.
g)	IS-13947 (Part-I):1993	:	Low Voltage switchgear & control gear : Part-I (General Rules)
h)	NFPA-496:1974	:	Purged & Pressurised Enclosure for Electrical Equipment in Hazardous Locations.

3.0 TECHNICAL REQUIREMENTS

3.1 Panel Construction

3.1.1 The local panels shall house the secondary instruments, annunciation system, Single loop controller, Control switches / push buttons, indicating lamps, relays, timers and other devices required for operation and monitoring of the equipment locally.

3.1.2 The panels shall be of free standing type either welded construction on angle iron (minimum section of 50 x 50 x 4 mm) structure or folded construction by sheet metal formation depending upon the equipments to be mounted on it. The panels shall be robustly built and stiffners as necessary shall be provided.

3.1.3 The panel shall be suitably reinforced to ensure adequate support for all instruments mounted thereon. All welds on exposed panel surfaces shall be ground smooth.

3.1.4 The salient features of construction shall be:

Sheet material: Cold rolled sheet steel
Frame thickness: Not less than 3.0mm
Enclosure thickness: Not less than 2.5 mm for load bearing sections (Mounted with instruments), 1.6 mm for doors and Not less than 2.0 mm for others
Panel Height: Not less than 2365 mm
Gland plate thickness: 3.0mm
Base channel: ISMC 100 with anti-vibration mounting & foundation bolts.

3.1.5 The panel shall be provided with rear doors with integral lockable handle. The door when locked shall be held at minimum three places.The door width shall not be more than 550mm.The doors shall be provided with suitable stiffners to prevent buckling. The handle shall be on the right side of the door. The door shall be removable type with concealed hinges to facilitate maintenance work. Suitable pocket inside the door shall be provided for keeping the drawings / documents.

3.1.6 Suitable neoprene gasket shall be provided on all doors and removable covers. Suitable ventilation louvers shall be provided at bottom and top of the doors covered with removable wire mesh.

3.1.7 The class of protection shall be in accordance with IP-42 unless otherwise specified in the data sheet – A (No. PES-145-54A-DS1-0).

3.1.8 All steel surfaces shall be cleaned by sand / pellet blasting, treated for pickling, degreasing and phosphating etc. by seven tank method. The panel shall have a high quality finish and appearance. The panel shall be painted with two coats of primer followed by two coats of epoxy / synthetic enamel based final paint of color shade and finish as given in data sheet-A (No. PES-145-54A-DS1-0). Minimum thickness of the paint shall be 85 microns for external paint and 70 microns for internal paint.

3.1.9 The cable glands of the required size and type as given in data sheet-A (No. PES-145-54A-DS1-0) shall be supplied alongwith the Panel.

3.1.10 All operable and indicating devices shall be mounted on the front of the panel while aux. Relays / timers MCBs etc. required for realization of control logics shall be mounted on a mounting plate inside the panel. Auxiliary relays and timers etc. shall be grouped according to the control function.

No operable or indicating devices shall be mounted below 750 mm and above 1800 mm (w.r.t. finished ground level). The devices shall be located in such a way so as to ensure easy access for operation / maintenance.

3.1.11 Single / dual control power supply feeders of voltage class as specified in data sheet-A (No. PES-145-54A-DS1-0) shall be provided by the purchaser. In case redundant power supply feeders are provided then auto changeover unit shall be mounted on the panel are in the panel supplier's scope. Where DC control power supply is specified an additional 240V, 50 Hz AC supply feeder for powering of space heater and lighting shall be provided by the purchaser. Suitable arrangement shall be provided inside the panel to receive and terminate the power supply feeder(s). For this purpose MCBs of suitable current rating shall be provided by the vendor. A supervisory relay along with a pilot lamp to indicate control supply 'ON' shall be provided on the panel. Any other power supply required for the operation of the devices mounted in the panel shall be arranged by the vendor.

3.1.12 The internal wiring shall be carried out with 1100 volt grade PVC insulated copper multi strand wire / flexible of 1.5mm2 size. AC & DC wires shall be kept separate from each other. Separate coloured wires to be used for AC and DC circuits. All wires shall be properly numbered and identified with ferrules as per the Control scheme / wiring diagram. Wires shall be routed and run through PVC troughs.

3.1.13 Terminal blocks shall be clip on type, 1100 volts grade. Separate terminal blocks shall be used for AC & DC circuits. The terminals shall be suitable for terminating 0.5 mm2 to 2.5mm2 external cables. The terminal for ammeters shall be provided with removable links for shorting CTs. Each terminal strip shall be provided with identification strip. The terminal shall not be mounted below 250 mm height from finished floor. The panel shall have ten (10) percent spare terminal.

3.1.14 The interior of each panel shall be suitably illuminated through fluorescent lamps operable on 240V 50 Hz AC power supply through panel door switch. A 15 Amp. 3-pin Power receptacle shall be provided.

3.1.15 Suitable space heaters operable on 240 Volts 50 Hz AC power system shall be provided at the panel bottom. These shall be designed to maintain the panel temperature five (5) deg. C above the ambient temperature during maintenance shutdown. Suitable isolating and control devices comprising of MCB, thermostat etc. shall be provided for the space heater.

3.1.16 The panel shall be provided with a copper earth bus of 25 x 6 mm size running throughout the width of the panel. It shall be terminated internally with 10 mm bolts at extreme ends for connection to; main station earth. The panel mounted equipments / devices shall be connected to earth bus through green coloured PVC insulated stranded copper conductor of 2.5 mm2 size.

3.1.17 Local Panel shall be provided with main name plate of 150 mm x 40 mm size having inscription of 20 mm height. The individual devices on the panels shall be as provided with separate name plate with inscription of 3 mm height. The instrument / devices shall be provided with stick on label plates inside the panel. The material of the main and individual labels shall be three (3) ply 3 mm thick Traffolyte Sheet / 2 mm Anodised Aluminium Plate. The inscription shall be with white letters on black background on traffolyte sheet. The labels shall be fixed by self tapping non-rusting screws.

3.2 Hazardous Area Panel Requirement

3.2.1 The Local Panel located in hazardous area shall be pressurized as per NFPA-496 requirements to render it non-hazardous. Alarms shall be provided for local and remote annunciation when pressurisation falls below 2.5 mm of water column. Protection shall be of type Z of NFPA-496. It shall not be possible to switch ON the power of purged section unless it is purged as per the recommendation of NFPA-496. Vendor must provide a protective device on the panel to protect the panel from over pressurisation.

3.2.2 Vendor shall supply pressurisation kit consisting of valves, restriction orifices, dual filter regulation, pressure gauges, pressure switches, rotameter etc. Pressurisation kit shall be surface mounting on a metal board and located outside the local panel. Pressurisation kit shall further consist of solenoid valve flow switch, timer blow off safety device etc., so as to make purging fully automatic. However final start shall be manual. Panel protection against over pressure to be provided as per NFPA-496.

3.2.3 Pressurised local control panel pressurization kit assembly design shall provide minimum leakage flow through the Local Control Panel. Panel venting shall be as per NFPA-496.

3.2.4 All components in the local panel like indicating instruments, push buttons switches, lamps etc., which are required to be energized without panel pressurization or before completion of purge cycle shall be explosion proof as per NEMA-7 & suitable for area classification.

3.2.5 All push buttons etc. requiring frequent operation during machine running shall have good positive sealing. Weatherproof housing or cover to be provided wherever necessary. Vendor shall provide pressurisation bypass switch outside explosion proof enclosure of pressurized panel with lamp indication. This shall be used only during maintenance. All hinges, screws, other non-painted metallic parts shall be of stainless steel material.

3.2.6 Provision to switch off manually all types of power shall be provided in the panel. In addition, it shall also be possible to switch off power circuits / components which are powered from motor control centre or control room manually in case of pressurization failure. All such cables from MCC and main control room shall be terminated in explosion proof boxes (NEMA-7).

3.3 Control & Monitoring devices

3.3.1 Instruments like Indicators, recorders, single loop controllers etc. as applicable and specified elsewhere for the plant / equipment shall be supplied and mounted on the panel.

3.3.2 Alarm Annunciator System

It shall be solid state discrete facia type having a sequence of ISA-S18.1A or as specified, opaque facia windows of 70 mm x 50 mm size, having two (2) lamps per window, and hooter of 10W, and provision for repeat group alarm at remote. The annunciator shall be provided with ten (10) percent spare windows or minimum two (2) windows along with electronics.

3.3.3 Relays

The relays shall be electromagnetic type suitable for specified control supply. Its contact configuration and rating shall be suitable for the specified control function. However minimum contact rating shall be 5 Amp AC & 2 Amp DC as applicable. There shall be ten (10) percent spare contacts.

3.3.4 Timers

The timers shall be electronic type suitable for specified control supply. Its contact configuration and rating shall be suitable for the specified control function. However, minimum contact rating shall be 5 Amp AC & 2 Amp DC as applicable.

3.3.5 Control / Selector Switches

Switches shall be Rotary Cam type with minimum of 5 Amps AC & 2 Amp DC continuous current rating. Selector switches shall be stay put type while control switches shall be spring-return-to-neutral type. Contact configuration and rating shall be as per the control function requirement. The switches shall be lockable type wherever specified. Each switch shall be provided with engraved plates indicating the switch position / functions.

3.3.6 Push Buttons / Indicating Lights

The push buttons shall be momentary action self-resetting type, however stop P.B. for unidirectional drives shall be provided with manual reset facility. Its contact configuration & rating shall be as required for the control function but minimum 2 NO + 2 NC of 5 Amp. AC rating. It shall have round coloured projecting tab and engraved escutcheon plate / inscription plate. Colour coding of push buttons shall be as under:

RED	Motor OFF / Valve CLOSE	YELLOW	Alarm acknowledge.
GREEN	Motor ON / Valve OPEN	BLACK	Lamp test

Indicating lights shall be suitable for direct connections across specified power supplies. It shall be fitted with built in resistance to prevent circuit tripping on shorting of lamp filament. It shall be fitted with LED cluster type lamp replaceable from front.

GREEN	Motor OFF / Valve CLOSED condition	AMBER	Motor tripped condition.
RED	Motor ON / Valve OPEN condition	WHITE	Normal / healthy condition

3.3.7 Ammeters

Ammeter shall be 96 x 96 mm size, 90 deg. deflection, 1.5% accuracy, 1 Amp. CT operated or with 4-20mA input and Flush mounting type as called for in the data sheet-A (No. PES-145-54A-DS1-0). Ammeters for motors shall have six (6) times folded scale at upper end to enable motor starting current indication.

3.3.8 Miniature Circuit Breaker (MCB)

These shall be instantaneous magnetic trip type for short circuit in addition to current time inverse delayed thermal trip feature for over current protection. The housing of MCB shall be made of non-ignitable, high impact material. It shall have minimum short circuit rating of 9 KA for AC Voltages and 4 KA for DC Voltages.

3.3.9 Makes of various instruments / devices shall be as given below

1.	Alarm Annunciators	:	Procon / IIC
2.	Ammeters	:	AEP / IMP
3.	Control / Selector Switches	:	Alsthom / Kaycee / Siemens / L&T
4.	Push Buttons / Indicating Lamps	:	Siemens / L&T / Teknic / Alsthom
5.	Auxiliary Relays	:	Jyoti / Siemens / L&T / OEN
6.	Timers	:	L&T / Alsthom / Bhartiya Cutler Hammer
7.	MCBs	:	S&S Power Engg. / Indo Asian / MDS
8.	Terminal Blocks	:	Jyoti / Elmex

4.0 TESTING AND INSPECTION

4.1 The bidder shall adopt suitable quality assurance program to ensure that the equipments offered will meet the specification requirements in full.

4.2 BHEL's standard Quality Plan for LCP is enclosed with the specification. The bidder shall furnish his acceptance to BHEL's QP and submit the signed and stamped copy of QP along with the offer.

4.3 The vendor shall conduct the following tests as a minimum requirement:

4.3.1 Routine Tests

1. High Voltage (H.V.)
2. Insulation Resistance (I.R.)
3. Functional

4.3.2 Type Tests

1. Enclosure Class Test

5.0 SPARES AND CONSUMABLES

5.1 Commissioning Spares and consumables

The bidder shall supply all commissioning spares and consumables 'as required' during Start-up, as part of the main equipment supply.

5.2. Mandatory Spares

The bidder shall offer alongwith main offer, the Mandatory Spares as specified elsewhere in the specification. The Mandatory Spares offered shall be of the same make and type as the main equipment.

5.3. Recommended Spares

The bidder shall furnish a list of Recommended Spares indicating the normal service expectancy period and frequency of replacement; quantities recommended for 3 years operation alongwith unit rate against each item to enable BHEL/BHEL's Customer to place a separate order later, if required.

6.0 DRAWINGS AND DOCUMENTS

6.1 The bidder shall furnish the following documents in required number of copies along with the bid :

1. Data Sheet no. PES-145-54A-DS1-0
2. General Arrangement Drawing.
3. Catalogue and technical information for instruments and devices.
4. Quality Plan.

6.2 The vendor shall furnish the following documents in required number as agreed after the award of contract:

1. Data Shee No. PES-145-54A-DS2-0
2. GA Drawing indicating layout of instruments, construction details, foundation details, cable gland plate alongwith cable glands and all details mentioned in this specification.
3. Control Schematic Diagram along with grouping of different terminals for various functions.
4. Catalogue and technical information for instruments and devices with selected options clearly marked.
5. O&M Manuals.
6. "As Built" Drawing.
7. CDs.

7.0 MARKING AND PACKING

7.1 Panel with all instruments / devices mounted on it shall be suitably packed & protected for the entire period of despatch, storage and erection against impact, abrasion, corrossion, incidental damage due to vermin, sunlight, high temperature, rain moisture, humidity, dust, sea-water spray (where applicable) as well as rough handling and delays in Transit and storage in open.

8.0 APPLICABLE DATA SHEET FORMS

This document shall be read with one or more of the following data sheet forms :

- Data sheet A&B for Local Panels : Data sheet no. PES-145-54A-DS1-0
- Data sheet C for Local Panels : Data sheet no. PES-145-54A-DS2-0

INSTRUMENTATION CABLE INTERCONNECTION & TERMINATION PHILOSOPHY

5.00.00	**INSTRUMENTATION CABLE INTERCONNECTION AND TERMINATION PHILOSOPHY** The cable interconnection philosophy to be adopted shall be such that extensive grouping of signals by large scale use of field mounted Group Junction Boxes (JBs) at strategic locations (where large concentration of signals are available, e.g. valves limit & torque switches, switchgear) is done and consequently cable with higher number of pairs are extensively used. The details of termination to be followed are mentioned in the given Table A.

TABLE A: CABLE TERMINATION TO BE FOLLOWED

Application		Type Of Termination		Type Of Cable
FROM (A)	**TO (B)**	**END A**	**END B**	
Valves/dampers drives (Integral Junction box)	Marshalling / Marshalling – cum Termination Cubicle / local group JB	Plug in connector	Post mount cage clamp type.	G
Transmitters, Process Actuated switches mounted in LIE/LIR	Integral Junction box of LIE/LIR	Plug in connector	Cage clamp (Rail mount) type.	F,G
RTD heads	Local junction box	Plug in connector	Cage clamp (Rail mount) type.	F
Thermocouple	Local junction box / CJC box (if applicable)	Plug in connector	Cage clamp (Rail mount) type.	A, B, C*
Other Field mounted Instrument	Local JB / Group JB	Plug in connector	Cage clamp (Rail mount) type.	F,G
RTD	Temperature transmitter	Plug in connector	Screwed, Cage clamp type	F
Thermocouple	Temperature transmitter	Plug in connector	Screwed, Cage clamp type	A, B, C*
Local Junction box, Temperature Transmitter, Int. Junction box of LIE/ LIR/ MCC/SWGR	Group JB	Cage clamp (Rail mount) type.	Cage clamp (Rail mount) type.	F,G
Local Junction box, Temperature Transmitter, Int. Junction box of LIE/ LIR/ Group JB / MCC/SWGR	Marshalling / Marshalling – cum Termination Cubicle	Cage clamp (Rail mount) type.	Cage clamp (Post mounted) type.	F,G
Marshalling cubicle/ Termination Cabinet	Electronic system cabinet	Cage clamp (Post mounted) type.	Plug-in connector / other system as per Mfr.'s Standard	Internal wiring

Application		Type Of Termination		Type Of Cable
FROM (A)	**TO (B)**	**END A**	**END B**	
Marshalling/ Termination System Cabinets	UCD mounted equipments	Cage clamp (Post mounted) type.	Plug in connector / Cage clamp type (rail mounted).	F,G (with plug-in connect or at one end)
DDCMIS/PLC cabinets	PC, Printers etc.	Plug in connector	Plug in connector	Mfr.'s Standar d

Notes 1 Normally 10% spare cores shall be provided when the numbers of pairs of cables are more than four pairs, except for pre-fabricated cables which shall be as per manufacturer's standard.

2 For analog signals, individual pair shielding & overall shielding & for Binary signals, only overall shielding of instrumentation cables shall be provided.

3 * For high temperature applications only.

6.00.00 TERMINAL BLOCKS

6.01.00 All terminal blocks shall be rail mounted/post mounted, cage clamp type with high quality non-flammable insulating material of melamine suitable for working temperature of 105 deg. C. The terminal blocks in field mounted junction boxes, temperature transmitters, instrument enclosures/racks, etc., shall be suitable for cage clamp connections. The terminal blocks in Control Equipment Room logic/termination/marshalling cubicles shall be suitable for post mounted cage clamp connection at the field input end. The exact type of terminal blocks to be provided by the Bidder and the technical details of the same including width etc. shall be subject to Employer's approval.

6.02.00 All the terminal blocks shall be provided complete with all required accessories including assembly rail, locking pin and section, end brackets, partitions, small partitions, transparent covers, support brackets, distance sleeves, warning label, marking, etc.

6.03.00 The marking on terminal strips shall correspond to the terminal numbering on wiring diagrams. At least 20% spare unused terminals shall be provided everywhere including local junction boxes, instrument racks/enclosures, termination/marshalling cabinets, etc. All terminal blocks shall be numbered for identification and grouped according to the function. Engraved labels shall be provided on the terminal blocks.

6.04.00 For terminating each process actuated switches, drive actuators, control valves, Thermocouple, RTD, etc. in Local Junction Boxes, etc, refer Drg no. 0000-999-POI-A-065.

6.05.00 The terminal blocks shall be arranged with at least 100 mm clearance between two sets of terminal blocks and between terminal blocks and junction box walls.

INTERNAL PANELS/ SYSTEM CABINETS WIRING

Internal panel/cabinet wiring shall be of multi-stranded copper conductor with FRLS PVC insulation without shield and outer sheath meeting the requirements of VDE 0815.

All internal wires shall be provided with tag and identification nos. etched on tightly fitted ferules at both ends. All wires directly connected to trip devices shall be distinguished by one additional red colour ferrule.

All external connection shall be made with one wire per termination point. Wires shall not be tapped or spliced between terminal points.

All floor slots of desk/panels/cabinets used for cable entrance shall be provided with removable gasketed gland plates and sealing material. Split type grommets shall be used for prefabricated cables.

All the special tools as may be required for solder less connections shall be provided by Bidder.

Wire sizes to be utilised for internal wiring.

(i)	Current (4-20 mA), low voltage signals (48V); Ammeter/Voltmeter circuit, control switches etc. for electrical system.	0.5 Sq.mm.
(ii)	Power supply and internal illumination.	2.5Sq.mm. minimum (shall be as per load requirement.)

INSTRUMENTATION CABLE INSTALLATION AND ROUTING

All cables assigned to a particular duct/conduit shall be grouped and pulled in simultaneously using cable grips and suitable lubricants. Cables removed from one duct/conduit shall not be reused without approval of Employer.

Cables shall be segregated as per IEEE Std.-422. In vertically stacked trays, the higher voltage cable shall be in higher position and instrumentation cable shall be in bottom tier of the tray stack. The distance between instrumentation cables and those of other system shall be as follows:

From 11 kV/6.6 kV/3.3 kV tray system	-	914 mm
From 415V tray system	-	610 mm
From control cable tray system	-	305 mm

Cables shall terminate in the enclosure through cable glands. All cable glands shall be properly gasketed. Sealing (to prevent ingress of dust entry and propagation of fire) shall be provided for all floor slots used for cable entrance. Compression cable glands (double for armoured and single for other cables) shall be provided.

Not in use

The cables emanating from redundant equipment/devices shall be routed through different paths. The above segregation of cables & wiring for redundant equipments/devices shall be in accordance with IEEE-Std-422.

CABLE LAYING AND ACCESSORIES

CABLE LAYING

1 Cables shall be laid strictly in line with cable schedule.

2 Identification tags for cables.

Indelible tags to be provided at all terminations, on both sides of wall or floor crossing, on each conduit/duct/pipe entry/exit, and at every 20 m in cable trench/tray.

3 Cable tray numbering and marking.

To be provided at every 10m and at each end of cable way & branch connection.

4 No jointing is permissible for Instrumentation cables. For other cables Jointing for more than 250 Meters run of cable shall be permitted.

5 Buried cable protection

With concrete slabs; Route markers at every 20 Meters along the route & at every bend.

6 Road Crossings

Cables to pass through buried high density PE pipes encased in PCC. At least 300 mm clearance shall be provided between

- HT power & LT power cables,
- LT power & LT control/instrumentation cables,

Spacing between cables of same voltage grade shall be in accordance with the derating criteria adopted for cable sizing.

7 Segregation (physical isolation to prevent fire jumping)

a All cable associated with the unit shall be segregated from cables of other Units.

b Interplant cables of station auxiliaries and unit critical drives shall be segregated in such a way that not more than half of the drives are lost in case of single incident of fire.

8 Cable clamping

All cables laid on trays shall be neatly dressed up & suitably clamped/tied to the tray. For cables in trefoil formation, trefoil clamps shall be provided.

9 Optical fiber cables (OFCs) :

Outside Building Area - to be laid necessarily inside GI conduit with support from cable tray/Trestle structure

Inside Building Area – to be laid on separate cable sub-trays

While buried- in separate buried trench approx.1.0 meter depth, to be laid in 2" rodent proof HDPE conduits covered with sand, brick, laid breadth-wise and soil along the pipe line route by contractor;

While crossing roads - to be laid in GI/rodent proof HDPE conduits with sand filling at bottom and sand, soil filling at top with cement concrete;

While crossing canals/river- to be laid in rodent proof HDPE conduits within hume pipe.

10 **Laying of Network Cable (UTP/STP) :**

Out side Building Area- to be laid necessarily inside GI conduits with support from cable tray / Tressle structure.

Inside Building Area- to be laid necessarily inside GI conduits on separate cable sub-trays.

Bidder shall supply and install all cable accessories and fittings like Light Interface Units, Surge suppressors, Opto isolators, Interface Converters, Fiber Optic Card Cage, Fiber Optic Line Driver, Repeater / Modem (for Optical Fiber Cables), cable glands, grommets, lugs, termination kits etc. on as required basis.

Bidder shall furnish two completely new sets of cable termination kits like Crimping tools, etc., which are required for maintenance of the system as per the type of termination used.

Cables, which terminate in cabinets of draw out sections shall have sufficient cable coiled in the bottom of the cabinet to permit full withdrawal of draw out sections without disconnecting the cables. When prefabricated cables with factory connectors on both ends are longer than required, the excess cable shall be coiled in the bottom of one or both termination cabinets.

No splices shall be made in conductors for instrument and control circuits except where required at connections to devices equipped with factory installed pigtails. Such splices shall be made only in approved splicing boxes of fitting with removable cover. The splices shall be made with sufficient slack left in the wires to permit withdrawal of the splice from the splicing box for ease of future disconnection of the splices. All exposed conductor or connector surfaces shall be covered with a minimum of three half-lapped layers of all-weather vinyl plastic electrical tape. Taping shall extend a minimum of two cable diameters over the cable jacket and a similar distance over the other insulation or connections requiring insulation.

The Bidder shall be responsible for proper grounding of all equipment under this package. Further, proper termination of cable shields shall be verified and the grounding of the same shall be coordinated so as to achieve grounding of all instrumentation cable shields at same potential. This shall be completed prior to system tests. All the cables etc. required for grounding of all equipments supplied under this package are to be supplied by the Bidder.

The Contractor shall take full care while laying / installing cables as recommended by cable manufacturers regarding pulling tensions and cable bends. Cables damaged in any way during installation shall be replaced at the expense of the Contractor.

FIELD MOUNTED LOCAL JUNCTION BOXES

(i)	No. of ways	12/24/36/48/64/72/96/128 with 20% spares terminals.
(ii)	Material & Thickness	4mm thick Fiberglass Reinforced Polyester (FRP).
(iii)	Type	Screwed at all four corners for door. Door gasket shall be of synthetic rubber.
(iv)	Mounting clamps and accessories	Suitable for mounting on walls, columns, structures etc. The brackets, bolts, nuts, screws, glands required for erection shall be of SS, included in Bidders scope of supply.
(v)	Type of terminal blocks	Rail mounted cage-clamp type suitable for conductor size upto 2.5 mm^2. An M6 earthing stud shall be provided.
(vi)	Protection Class	IP-55 minimum for indoor & IP-65 minimum for outdoor applications.
(vii)	Grounding	To be provided.
(viii)	Color	7035

CONDUITS

Conduits shall be generally used for interconnecting cables from field instruments to Local JB's. All rigid conduits, couplings and elbows shall be hot dipped galvanized rigid mild steel in accordance with IS: 9537 Part-I (1980) and Part-II (1981). The conduit interior and exterior surfaces shall have continuous zinc coating with an overcoat of transparent enamel lacker or zinc chromate. Flexible conduit shall be heat resistant lead coated steel, The temperature rating of flexible conduit shall be suitable for the following areas:

(i) Mills
(ii) Drum
(iii) Main steam, RH steam
(iv) Air Heaters
(v) Furnace, BFPDTs

For the remaining applications, water leak, fire and rust proof flexible GI conduits shall be provided.
And for remaining applications, water leak, fire and rust proof flexible GI conduits shall be provided. The temperature rating of flexible conduit shall be suitable for actual application.

The Bidder shall install conduits according to the general routing as approved by Employer and shall coordinate conduit locations with other works.

All grounding bushings within all enclosures shall be wired together and connected internally to the enclosure grounding lug or grounding bus with 8 AWG bare copper conductor. Conduit runs to individually mounted equipment shall be grounded to the Employer's cable tray grounding conductor with 12 AEG bare copper conductor. All grounding bushings, clamps and connectors shall be subject to approval of the Employer.

All rigid conduit fittings shall conform to the requirements of IS: 2667, 1976. Galvanized steel fitting shall be used with steel conduit. All flexible conduit fittings shall be liquid tight, galvanized steel. The end fittings shall be compatible with the flexible conduit supplied.

All individually mounted equipment and devices shall be connected to the supply conduit, using not more than one meter of flexible conduit adjacent to the equipment or device. Flexible conduit shall be installed in all conduit runs, which are supported by both building steel and structures subject to vibration or thermal expansion. This shall include locations where conduit supported by building steel enters or becomes supported by the turbine generator foundation and where conduit supported by building steel or foundation becomes supported by steam generator framing.

Special areas, such as control rooms in which external noise is to be minimized, shall have flexible conduit in conduit runs where the runs cross from the main building framing to the control room framing.

Conduit supports shall be furnished and installed in accordance with these specifications. Support material shall comply with the following requirements.

i) Hanger rods shall be 12 mm diameter galvanized threaded steel rods.

ii) Single conduit supports shall be one-hole cast metal straps and clamp backs unless other types are acceptable to the Employer. Multiple conduit bank supports shall be constructed of special galvanized support channels with associated conduit clips.

Conduit sealing, explosion proof, dust proof and other types of special fittings shall be provided as required by these specifications and shall be consistent with the area and equipment with which they are installed. Fittings installed outdoors and in damp locations shall be sealed and gasketed. Hazardous area fittings and conduits sealing shall conform to NEC requirements for the area classification.

Contractor shall provide double locknuts on all conduit terminations not provided with threaded hubs and couplings. Water tight conduit unions and rain tight conduit hubs shall be utilized for all the application which shall be exposed to weather. Moisture pockets shall be eliminated from conduits.

Conduits shall be securely fastened to all boxes and cabinets.

CABLE SUB-TRAY & SUPPORT

The cable sub-trays and the supporting system, to be generally used between Local/Group JBs and the main cable trays and the same shall be furnished and installed by the Contractor. It is the assembly of sections and associated fittings forming a rigid structural system used to support the cable from the equipment or instrument enclosure upto the main cable trays (trunk route).

The covers on the cable sub-trays shall be used for protection of cables in areas where damage may occur from falling objects, welding spark, corrosive environment, etc. & shall be electrically continuous and solidly grounded. The cable trays shall not have sharp edges, burrs or projections injurious to the insulation or outer sheath of the cables.

The supporting arrangement of cable tray system shall be able to withstand the weight of the cable and cable tray system. The supporting interval shall not be more than the recommended span for the above loading for the type of cable tray selected. The tray shall not overhang by more than one meter from the support at the dead end. As far as practicable

the cable sub-tray system shall be supported from one side only, in order to facilitate installation and maintenance of cables.

The Bidder shall furnish and install the estimated quantities and sizes of sub trays/troughs including all required fittings and adaptors on as required basis.

STANDARD BLOCK DIAGRAM OF LP DOSING SYSTEM

STANDARD BLOCK INTERFACE DIAGRAM FOR LP DOSING SYSTEM (TYPICAL)

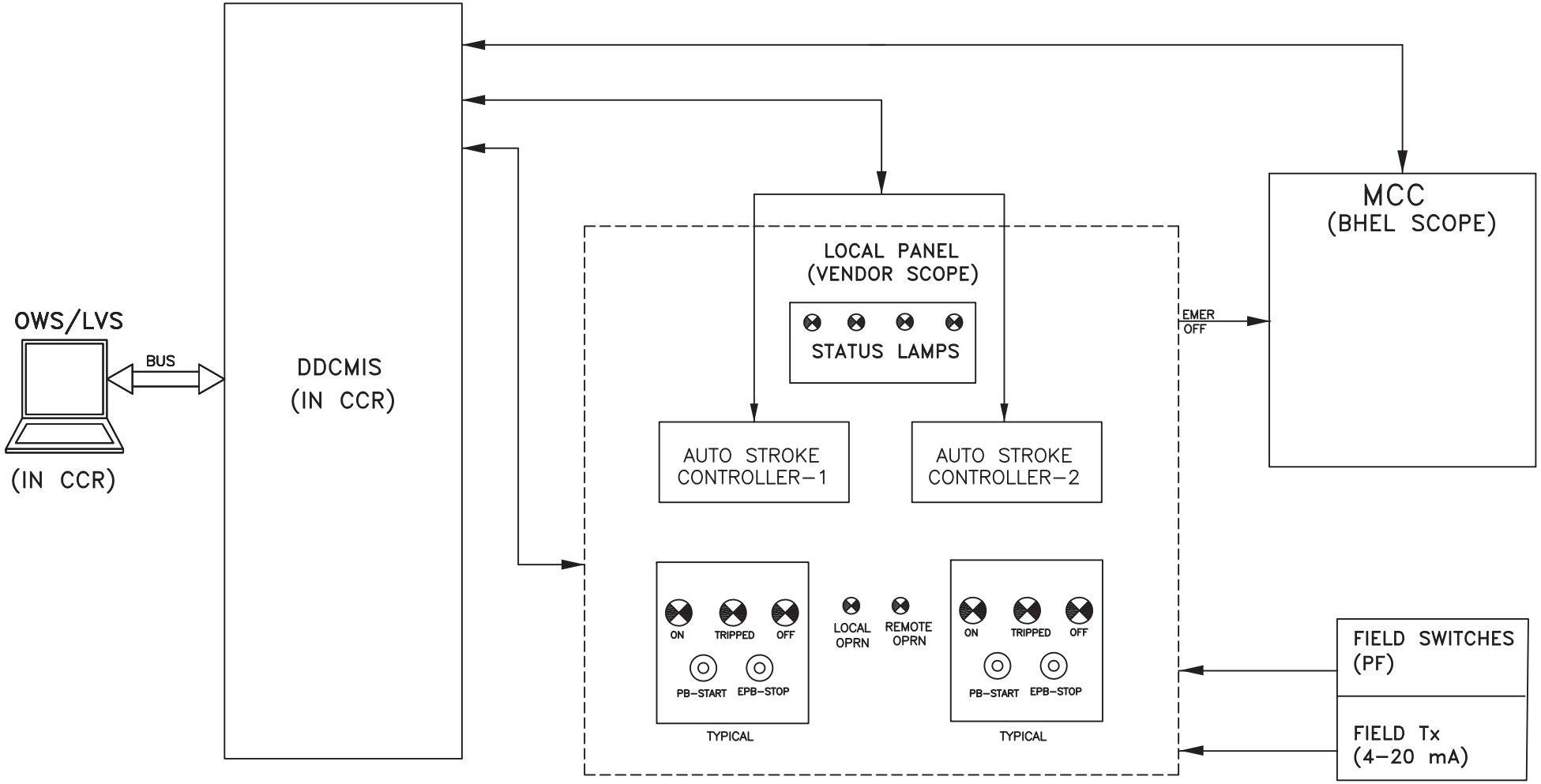

NOTES:

1. SIGNAL EXCHANGE BETWEEN DDCMIS & LP DOSING LOCAL PANEL SHALL BE AS PER CONTROL PHILOSOPHY.
2. FIELD INSTRUMENT SHALL BE TERMINATED IN LOCAL PANEL.
3. SIGNALS FOR INTERFACE TO/FROM DDCMIS ARE ALSO TERMINATED IN LOCAL PANEL.
4. THE LOCAL PANEL IS TYPICAL. SIMILAR PANELS SHALL BE APPLICABLE FOR
   A. HYDRAZINE DOSING SYSTEM
   B. AMMONIA DOSING SYSTEM
   C. NAOH DOSING SYSTEM.

TITLE: STANDARD BLOCK INTERFACE DIAGRAM FOR LP DOSING SYSTEM	DRG.NO.	PE–DG–999–145–I273A
	DATE	30.10.2009
	REV.NO.	01
	SHT	3 OF 3

QUALITY PLAN

ELECTRICAL ACTUATOR WITH INTEGRAL STARTER

Test/Attributes Characteristics / ITEM/ COPONENT/ SUB SYSTEM ASSEMBLY/ TESTING	RPM ®	No Load Current ®	IR & HV Test®	Mounting Dimension®	All routine Test as per Standard & Specification®	Correct Phase Sequence®	Operation & Setting of limit Switch/Torque Switch®	Stall Torque/Current (A)	Hand Wheel operation/ Auto de clutch function (A)	Function of Aux. like Potentiometer, space heater, position indicator ®	EPT output ®	Grease leakage ®	Local/ Remote (Open-Stop-Close) Operation® Safety check (Single phasing, Phase correction, Tripping etc.) (A)
ELECTRICAL ACTUATOR WITH INTEGRAL STARTER(IS_9334)													
Motor	Y	Y	Y	Y	Y								
Final Testing	Y	Y	Y	Y	Y	Y	Y	Y	Y	Y	Y	Y	Y

Note: 1) Detailed procedure of Environmental Stress Screening test shall be as per Quality Assurance Programme in General Technical Conditions

2) This is an indicative list of tests/checks. The manufacturer is to furnish a detailed quality plan indicating the practices and procedure adopted along with relevant supporting documents.

® - Routine Test (A) - Acceptance Test Y - Test applicable

MEASURING INSTRUMENTS (PRIMARY AND SECONDARY)

TESTS / ITEMS	Dimensions (R)	Make, Model, Type, Rating (R)	Process / Electrical connection (R)	Calibration (R)	Test as per standard(R)	Insulation Resistance (R)	IBR Certification (if applicable)(R)	Hydro Test(R)	Material Test certificate ®
1. PR Gauge (IS-3624)	Y	Y	Y	Y	Y				
2. Temp. Gauge (BS-5235)	Y	Y	Y	Y	Y				
3. Pr./D.P.Switch(BS-6134)	Y	Y	Y	Y	Y	Y			
4. Electronic Transmitter(IEC-770)	Y	Y	Y	Y	Y	Y			
5. Temp. Switch	Y	Y	Y	Y	Y	Y			
6. Recorder(IS-9319/ANSI C-39.4)	Y	Y	Y	Y	Y	Y			
7. Vertical indicators	Y	Y	Y	Y		Y			
8. Digital Indicators	Y	Y	Y	Y		Y			
9. Integrators	Y	Y	Y	Y					
10. Electrical Metering Instrument (IS-1248)	Y	Y	Y	Y	Y	Y			
11. Transducer (IEC-688)	Y	Y	Y	Y	Y	Y			
12. Thermocouples (IEC – 754 / ANSI-MC-96.1)	Y	Y	Y	Y	Y	Y			
13. RTD(IEC-751)	Y	Y	Y	Y	Y	Y			
14. Thermowell	Y		Y				Y	Y	Y

R-Routine Test A- Acceptance Test Y – Test applicable

: Note: **1) Detailed procedure of Environmental Stress Screening shall be as per Quality Assurance Programme in General Technical Conditions. Requirement of test and procedure (if required) finalized during QP finalization**

2) This is an indicative list of tests/checks. The manufacturer is to furnish a detailed quality plan indicating the Practices and Procedure adopted alongwith relevant supporting documents.

TESTS / ITEMS	Dimensions (R)	Make, Model, Type, Rating (R)	Process / Electrical connection (R)	Calibration (R)	Requirement as per standard (R)	WPS approval (A)	Non-destructive testing (R)	Calculation for accuracy (R)	Insulation Resistance (R)	IBR Certification as applicable (R)	Hydro test (R)	Material test certificate (A)
15. Cold junction compensation box	Y	Y	Y	Y					Y			
16. Orifice plate(BS-1042)	Y	Y	Y	Y *	Y	Y **	Y **			Y	Y **	Y
17. Flow nozzle(BS-1042)	Y	Y	Y	Y *	Y	Y	Y			Y	Y	Y
18. Impact head type element	Y	Y	Y					Y				Y
19. Level transmitter/float type switch	Y	Y	Y	Y					Y	Y	Y	Y
20. Flue Gas analyser	Y	Y	Y	Y								
21. Dust emission monitors	Y	Y	Y	Y								
*Calibration to be carried out on one flow element of each type and size if calibration carried out as type test same shall not be repeated.												
** If applicable												

R-Routine Test A- Acceptance Test Y – Test applicable

Note: 1) Detailed procedure of Environmental Stress screening test shall be as per Quality Assurance Programme in General Technical Conditions. Requirement of test and procedure (if required) finalized during QP finalization

2) This is an indicative list of tests/checks. The manufacturer is to furnish a detailed quality plan indicating the Practices and Procedure adopted alongwith relevant supporting documents.

CLAUSE NO.	QUALITY ASSURANCE

CONTROL PANEL SQE_25

Attributes Characteristics / Item Components Sub System Assembly	Electrical Properties	Mechanical Properties	Chemical Properties	Dimensions / Finish	Type/ Rating/Functional check	HV/IR	Routine test as per relevant std.	Constructional Features	IS:6005 ,Seven tank process	Paint finish/ shade/thickness	Mountings / BOM/ Make, Completeness	Interlock Functional & Operation Testing / Simulation check	Degree of Protection Test	Specification requirement
Sheet Steel (IS-513)		Y	Y	Y										
Aluminum / Copper Bus-bar(IS-5082/IS-613/IS-1987)	Y	Y	Y	Y										
Support Insulator (BS-2782/IEC-660/IS-10912)	Y	Y	Y	Y										
Control / Selector Switch(IS-6875)					Y	Y	Y							
Contractor/ MCB(IS-13947)					Y	Y	Y							
O/L Protection relays(IS-3231)					Y		Y							
C.T /V.T/ Indicating Meter(IS-2705/3156/1248)					Y	Y	Y							
Fuse/ Fuse carrier(IS-13703)					Y	Y	Y							
Terminals/lugs/pvc wires(IS-13947//IS-694)	Y			Y	Y	Y	Y							
Timers(IS-3231)					Y	Y	Y							
LVS, Mosaics														Y
Push Button/ Lamp/ (IS-6875)					Y	Y	Y							
Control Transformer (IS-12021)					Y	Y	Y							
Mimic, Annunciater					Y		Y							
GASKET(IS-11149)		Y	Y	Y	Y		Y							
Fabrication								Y						
Pretreatment & Painting									Y	Y				
Control panel										Y	Y	Y	Y	Y

NOTE:

1. This is an indicative list of Test/ Checks. The manufacturer to furnish a detailed Quality Plan indicating the practice and procedure along with relevant supporting documents.
2. All major Bought Out Items will be subject to NTPC approval.

DIAGRAM OF INTERFACING WITH FIELD INSTRUMENTS

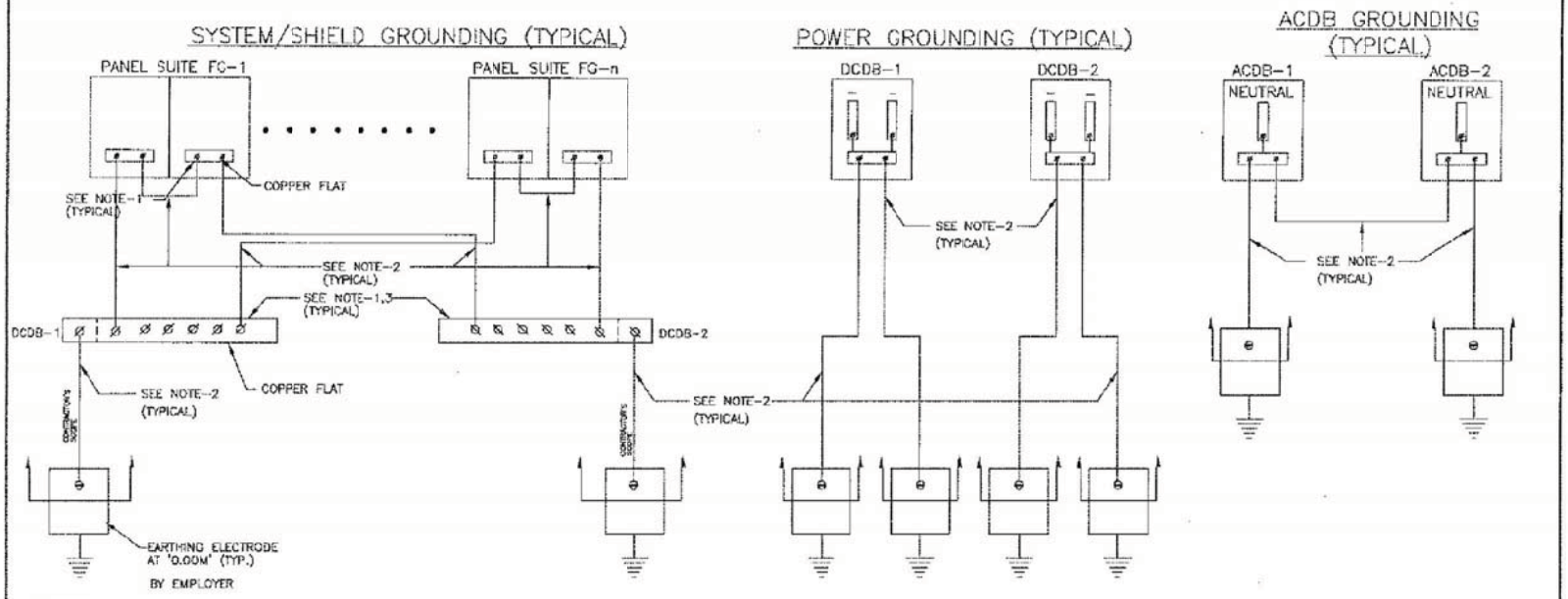

NOTES:—

1. SUPPLY, ERECTION, TERMINATION OF CABLES, FLATS ETC. REQUIRED FOR PROPER GROUNDING OF CONTRACTOR's CONTROL SYSTEM, SYSTEM CABINETS, POWER SUPPLY CABINETS ETC. ARE IN THE SCOPE OF CONTRACTOR.
2. CABLE IN CONTRACTOR'S SCOPE.
3. TO BE LOCATED IN DCDB.
4. EXACT LOCATION, ARRANGEMENTS OF FLATS ETC. SHALL BE AS FINALISED WITH CONTRACTOR. DURING DETAILED ENGINEERING.
5. CABINET BODY, CABINET BOTTOM PLATE, CABINET DOORS ARE TO BE CONNECTED TO PANEL EARTH FLAT COPPER CABLE BY CONTRACTOR.

FOR TENDER PURPOSE ONLY

This document is the property of NATIONAL THERMAL POWER CORPORATION LTD. No part of this document will be reproduced by any means without the written permission.

एन टी पी सी NTPC

N T P C LIMITED
(A GOVERNMENT OF INDIA ENTERPRISE)
ENGINEERING DIVISION

PROJECT: TYPICAL THERMAL POWER PROJECT

TITLE: INSTRUMENTATION CABLING DIAGRAM
GROUNDING SCHEME FOR CABINETS / PANELS / POWER SUPPLY

REV.NO.	DESCRIPTION	DRAWN	DESIGN	CHKD.	M	E	C	C&I	ARCH.	APPD	DATE
A	FIRST ISSUE										21.08.12

CLEARED BY

SIZE	SCALE	DRG. NO.	REV. NO.
A3	N.T.S.	0000-999-POI-A-019A SH-1 OF 2	A

This document is the property of NATIONAL THERMAL POWER CORPORATION LTD.
No part of this document will be reproduced by any means without the written permission.

GROUNDING FOR EACH ROW OF PANELS (TYPICAL)

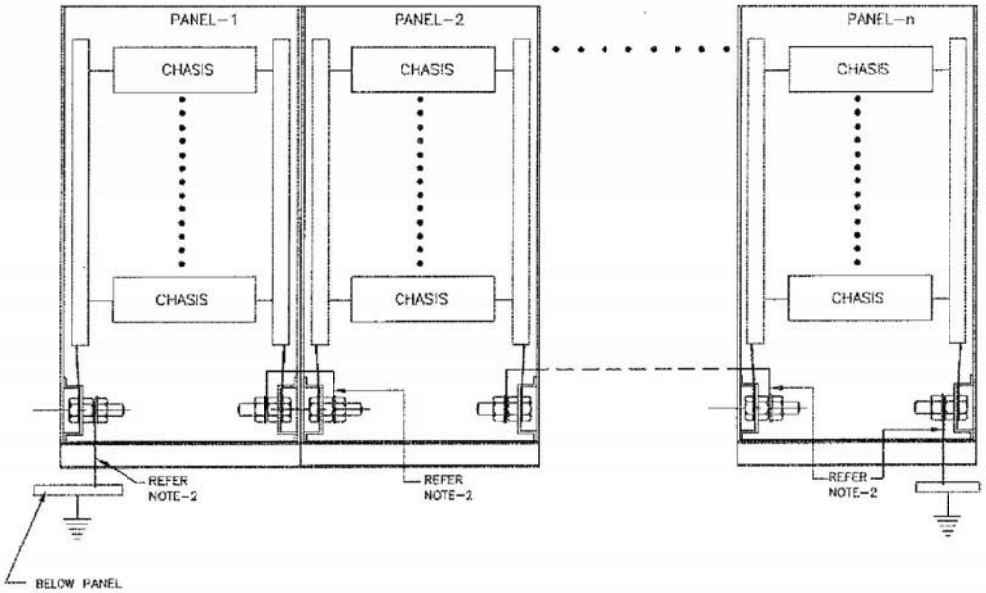

NOTES:-

1. SUPPLY, ERECTION, TERMINATION OF CABLES, FLATS ETC. REQUIRED FOR PROPER GROUNDING OF CONTRACTOR's CONTROL SYSTEM, SYSTEM CABINETS, POWER SUPPLY CABINETS ETC. ARE IN THE SCOPE OF CONTRACTOR.
2. CABLE IN CONTRACTOR'S SCOPE.
3. TO BE LOCATED IN DCDB.
4. EXACT LOCATION, ARRANGEMENTS OF FLATS ETC. SHALL BE AS FINALISED WITH CONTRACTOR. DURING DETAILED ENGINEERING.
5. CABINET BODY, CABINET BOTTOM PLATE, CABINET DOORS ARE TO BE CONNECTED TO PANEL EARTH FLAT COPPER CABLE BY CONTRACTOR.

FOR TENDER PURPOSE ONLY

एन टी पी सी NTPC

N T P C LIMITED
(A GOVERNMENT OF INDIA ENTERPRISE)
ENGINEERING DIVISION

REV.NO.	DESCRIPTION	DRAWN	DESIGN	CHKD.	M	E	C	C&I	ARCH.	APPD	DATE
A	FIRST ISSUE										21.08.12

CLEARED BY

PROJECT: TYPICAL THERMAL POWER PROJECT

TITLE: INSTRUMENTATION CABLING DIAGRAM
GROUNDING SCHEME FOR CABINETS / PANELS / POWER SUPPLY

SIZE	SCALE	DRG. NO.	REV. NO.
A3	N.T.S.	0000-999-POI-A-019A SH-2 OF 2	A

This document is the property of NATIONAL THERMAL POWER CORPORATION LTD.
No part of this document will be reproduced by any means without the written permission.

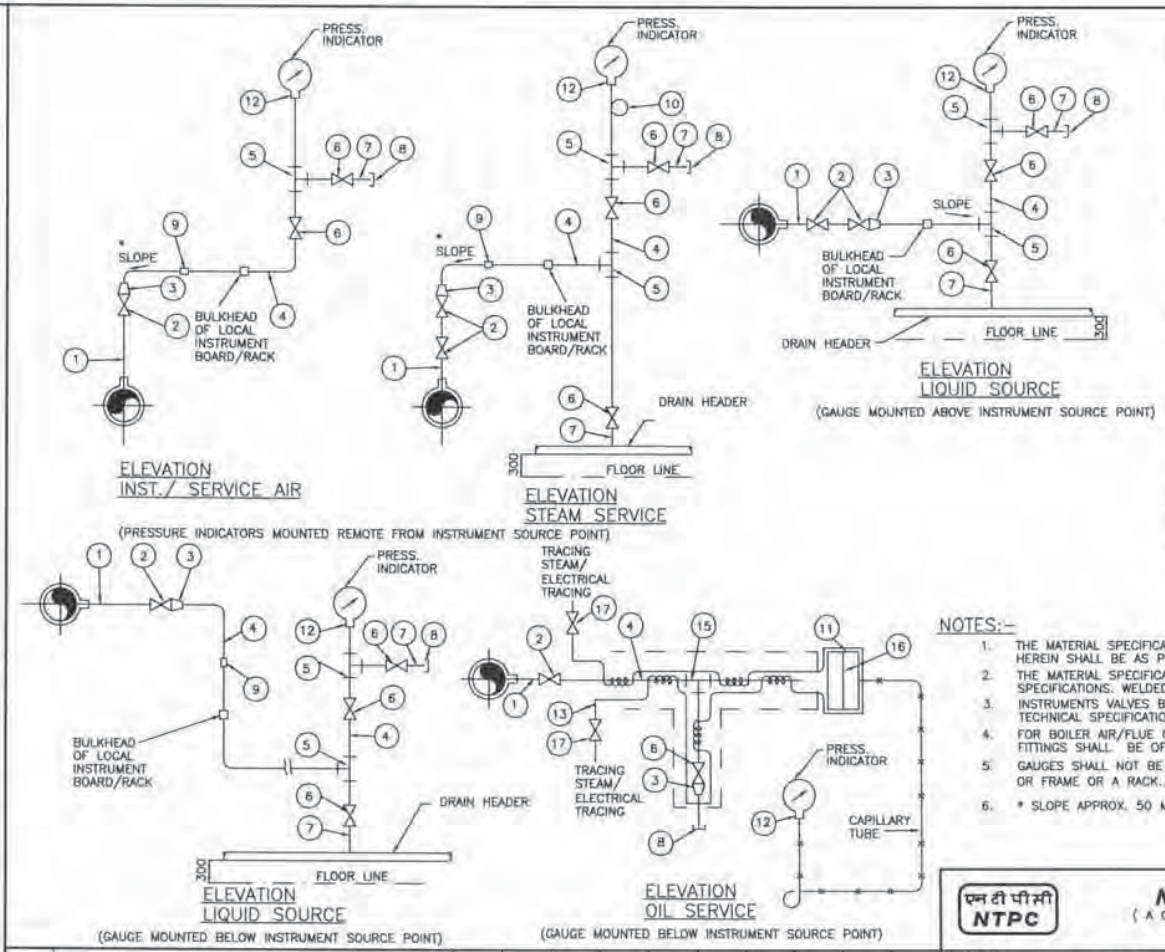

LIST OF MATERIALS

ITEM NO.	DESCRIPTION
1.	1/2" , 3/4" , 1" NPS SCH 40/80/160/XXS/P91 (AS PER PROCESS REQUIREMENT) NIPPLE OF MATERIAL SAME AS THAT OF MAIN PIPE.
2.	1/2"/3/4"/1' SW GLOBE VALVE/GATE VALVE
3.	3/4" / 1" x 1/2" SW REDUCING INSERT
4.	1/2" / 3/4" PIPE
5.	1/2" / 3/4" SW EQUAL TEE
6.	1/2" / 3/4" SW GLOBE VALVE.
7.	1/2" / 3/4" NPS SW x 1/2" / 3/4" NPT(M) CARBON/ALLOY STEEL NIPPLE.
8.	1/2" / 3/4" NPT(F) CAP.
9.	1/2" / 3/4" PIPE UNION.
10.	8" SS SYPHON
11.	1/2" BLIND 300lbs RF ANSI FLANGE DRILLED AND TAPED FOR 1" NPT PIPE.
12.	SUITABLE ADAPTER.
13.	1/4" CHROME MOLY STEEL TUBE.
14.	
15.	1"/3/4" SW EQUAL TEE.
16.	DIAPHRAGM(WAFER ELEMENT)
17.	ISOLATION VALVE 316 SS,1/4"SW

NOTES:-

1. THE MATERIAL SPECIFICATION AND SCHEDULE NO. OF IMPULSE PIPE & NIPPLE AS LISTED HEREIN SHALL BE AS PER TECHNICAL SPECIFICATIONS.
2. THE MATERIAL SPECIFICATION AND RATING OF FITTINGS AS LISTED SHALL BE AS PER SPECIFICATIONS. WELDED/THREADED FITTINGS SHALL CONFIRM TO ANSI-B.16-11.
3. INSTRUMENTS VALVES BODY STEM MATERIAL AND PRESSURE CLASS SHALL BE AS PER TECHNICAL SPECIFICATIONS.
4. FOR BOILER AIR/FLUE GAS SERVICES SOURCE CONNECTIONS IMPULSE PIPING AND ALL FITTINGS SHALL BE OF 3/4" NB SIZE.
5. GAUGES SHALL NOT BE MOUNTED ON THE PIPE. IT WILL BE MOUNTED ON A CHANNEL OR FRAME OR A RACK.
6. * SLOPE APPROX. 50 MM / METRE.

FOR TENDER PURPOSE ONLY

एन टी पी सी NTPC

N T P C LIMITED
(A GOVERNMENT OF INDIA ENTERPRISE)
ENGINEERING DIVISION

PROJECT: TYPICAL THERMAL POWER PROJECT

TITLE: INSTRUMENT INSTALLATION DIAGRAM (FOR PRESSURE GAUGE)

REV.NO.	DESCRIPTION	DRAWN	DESIGN	CHKD.	M	E	C	C&I	ARCH.	APPD	DATE
A	FIRST ISSUE							T.G.			21.08.12

CLEARED BY

SIZE	SCALE	DRG. NO.	REV. NO.
A3	N.T.S.	0000-999-POI-A-022	A

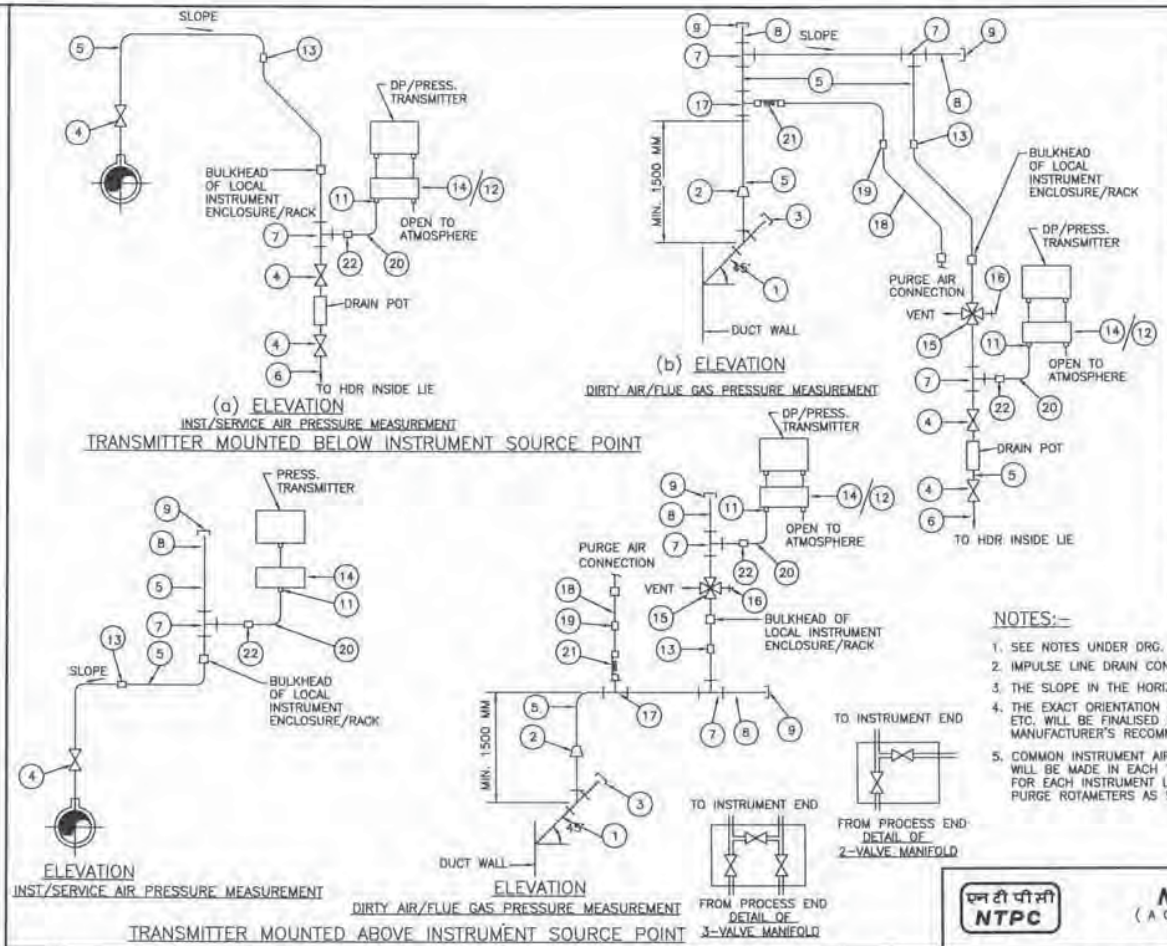

LIST OF MATERIALS

ITEM NO.	DESCRIPTION
1.	42 X 405 MM M.S. BLACK PIPE
2.	M42x2 TO 3/4" REDUCING INSERT
3.	M42x2(F) M.S.CAP
4.	3/4" SW GLOBE VALVE/GATE VALVE
5.	3/4" NPS PIPE
6.	3/4" NPS SW 3/4" NPT(M) CS/AS NIPPLE
7.	3/4" SW EQUAL TEE
8.	3/4" NPS SCH 80 CARBON/ALLOY STEEL NIPPLE
9.	3/4" NPT(F) CS/AS CAP
10.	3/4" SW CS/AS EQUAL CROSS
11.	1/2" TUBE ADOPTER
12.	3 VALVE MANIFOLD
13.	3/4" PIPE UNION
14.	2 VALVE MANIFOLD
15.	3/4" SW 4 WAY VALVE
16.	QUICK DISCONECT FITTING
17.	3/4"SWx1/2"SW BRANCH TEE
18.	1/2" NB SEAMLESS GI PIPE
19.	1/2" NPT (F) GI FITTING
20.	SS TUBE
21.	FLEXIBLE HOSE WITH ONE END SOCKET WELDED (PIPE SIDE) & OTHER END WITH SUITABLE FITTINGS.
22.	3/4" x 1/2" S.S. TUBE UNION

NOTES:-

1. SEE NOTES UNDER DRG. NO.0000-999-POI-A-022.
2. IMPULSE LINE DRAIN CONNECTIONS SHALL BE DONE AS PER TECHNICAL SPECIFICATIONS
3. THE SLOPE IN THE HORIZONTAL OF THE IMPULSE PIPE SHALL BE APPROX. 50 mm/mtr.
4. THE EXACT ORIENTATION OF THE TRANSMITTERS WITH RESPECT TO VALVE MANIFOLDS ETC. WILL BE FINALISED DURING DETAILED ENGINEERING KEEPING IN VIEW THE MANUFACTURER'S RECOMMENDATIONS.
5. COMMON INSTRUMENT AIR HEADER (1"NB) USING REDUNDANT AIR FILTER REGULATORS WILL BE MADE IN EACH TRANSMITTER ENCLOSURE REQUIRING PURGE AIR. PURGE AIR FOR EACH INSTRUMENT LINE SHALL BE TAPPED FROM THIS HEADER USING INDIVIDUAL PURGE ROTAMETERS AS SHOWN IN DRG. NO. 0000-999-POI-A-034 TYPICALLY.

FOR TENDER PURPOSE ONLY

एन टी पी सी NTPC

N T P C LIMITED
(A GOVERNMENT OF INDIA ENTERPRISE)
ENGINEERING DIVISION

PROJECT: TYPICAL THERMAL POWER PROJECT

TITLE: INSTRUMENT INSTALLATION DIAGRAM (PRESSURE MEASUREMENT USING PRESS / DP TRANSMITTERS (INST./SERVICE, DIRTY AIR/FLUE GAS)

REV.NO.	DESCRIPTION	DRAWN	DESIGN	CHKD.	M	E	C	C&I	ARCH.	APPD	DATE
A	FIRST ISSUE							T.G.			21.08.12

CLEARED BY

SIZE	SCALE	DRG. NO.	REV. NO.
A3	N.T.S.	0000-999-POI-A-023	A

This document is the property of NATIONAL THERMAL POWER CORPORATION LTD. No part of this document will be reproduced by any means without the written permission.

This document is the property of NATIONAL THERMAL POWER CORPORATION LTD.
No part of this document will be reproduced by any means without the written permission.

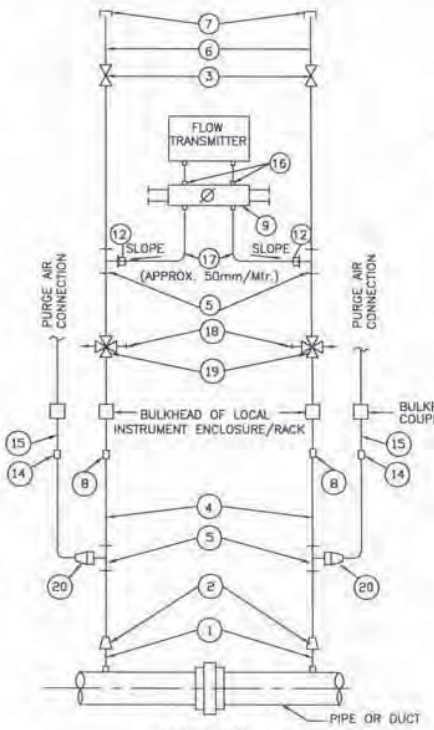

ELEVATION

TRANSMITTER MOUNTED ABOVE INSTRUMENT SOURCE POINT

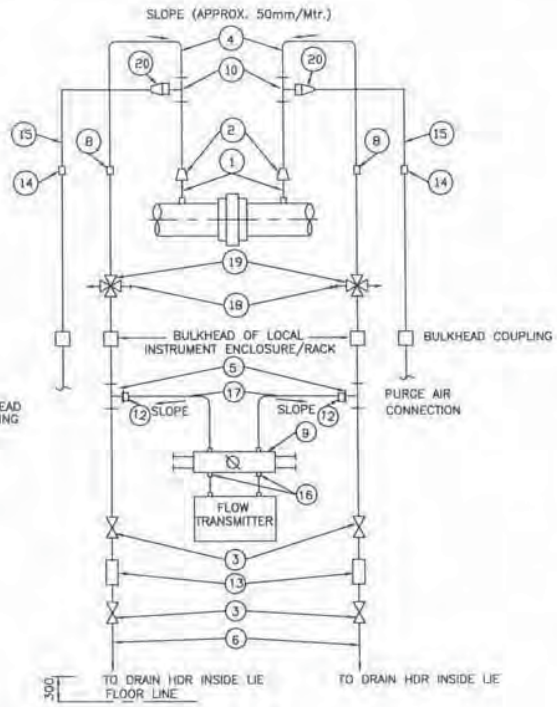

ELEVATION

TRANSMITTER MOUNTED BELOW INSTRUMENT SOURCE POINT

LIST OF MATERIALS

ITEM NO.	DESCRIPTION
1.	42x4.05mm M.S. BLACK PIPE.
2.	M 42x2 TO 3/4"SW REDUCING INSERT.
3.	3/4" SW GLOBE VALVE.
4.	3/4" PIPE.
5.	3/4" SW EQUAL TEE.
6.	3/4" SCH. 80 SWx3/4" NPT (M) CS/AS NIPPLE
7.	3/4" NPT (F) CAP.
8.	3/4" PIPE UNION.
9.	5 VALVE MANIFOLD FOR DETAIL REFER DRAWING NO.0000-102-POI-A-026.
10.	3/4" SW EQUAL TEE.
11.	3/4" SW GATE VALVE.
12.	3/4" PIPE x 1/2" TUBE UNION
13.	DRAIN POT.
14.	1/2" GI FITTING
15.	1/2" NB GI PIPE
16.	SUITABLE ADAPTER
17.	SS TUBE
18.	QUICK DISCONNECT FITTINGS.
19.	3/4" SW 4 WAY VALVE.
20.	3/4" x1/2" REDUCER.

NOTES:-

1. SAME NOTES AS UNDER DRG. NO. 0000-999-POI-A-023.

AIR/GAS FLOW MEASUREMENT USING HEAD TYPE PRIMARY ELEMENT

FOR TENDER PURPOSE ONLY

एन टी पी सी NTPC

N T P C LIMITED
(A GOVERNMENT OF INDIA ENTERPRISE)
ENGINEERING DIVISION

PROJECT: TYPICAL THERMAL POWER PROJECT

TITLE: INSTRUMENT INSTALLATION DIAGRAM (FLOW MEASUREMENT AIR/GAS)

REV.NO.	DESCRIPTION	DRAWN	DESIGN	CHKD.	M	E	C	C&I	ARCH.	APPD	DATE
A	FIRST ISSUE							T.G.			21.08.12

CLEARED BY

SIZE	SCALE	DRG. NO.	REV. NO.
A3	N.T.S.	0000-999-POI-A-028	B

This document is the property of NATIONAL THERMAL POWER CORPORATION LTD.
No part of this document will be reproduced by any means without the written permission.

PRESS. MEASUREMENT

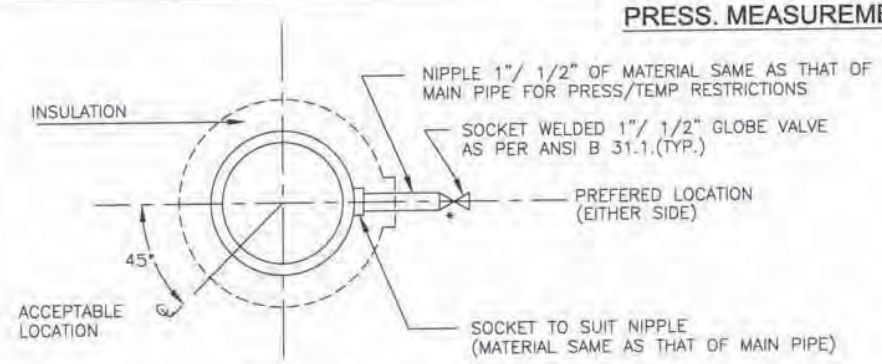

ELEVATION
LIQUID SERVICE

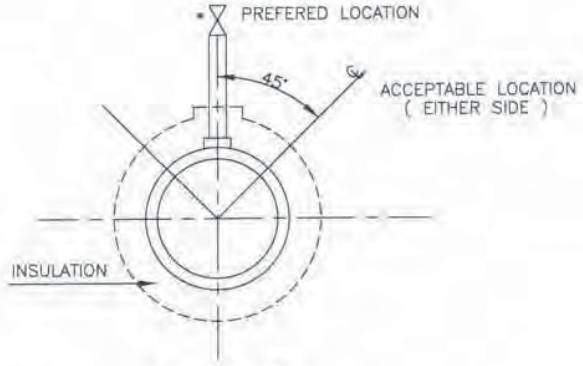

ELEVATION
STEAM SERVICE

PRESSURE CONNECTION ON HORIZONTAL PIPE

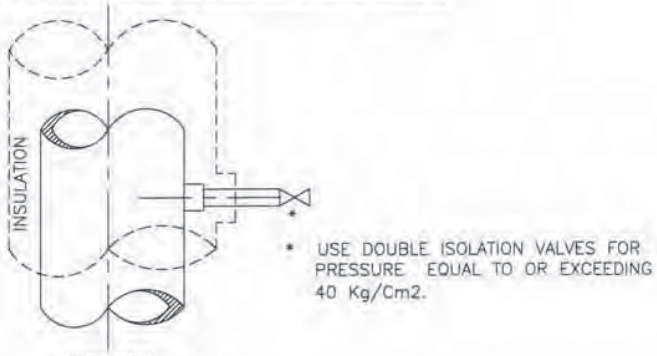

ELEVATION
LIQUID OR STEAM SERVICE

PRESSURE CONNECTIONS ON VERTICAL PIPES

FOR TENDER PURPOSE ONLY

REV. NO.	DESCRIPTION	DRAWN	DESIGN	CHKD.	M	E	C	T.G.	C&I	ARCH.	APPD.	DATE
A	FIRST ISSUE											

CLEARED BY

NTPC — N T P C LIMITED (A GOVERNMENT OF INDIA ENTERPRISE) ENGINEERING DIVISION

PROJECT	TYPICALTHERMAL POWER PROJECT
TITLE	INSTRUMENT SOURCE CONNECTION DETAILS

SIZE	SCALE	DRG. NO.	REV. NO.
A4	N.T.S.	0000-999-POI-A-035 Sh-1 OF 14	A

This document is the property of NATIONAL THERMAL POWER CORPORATION LTD.
No part of this document will be reproduced by any means without the written permission.

PRESSURE MEASUREMENT

(SYSTEM PR.>40Kg/Sq Cm CL 9000)

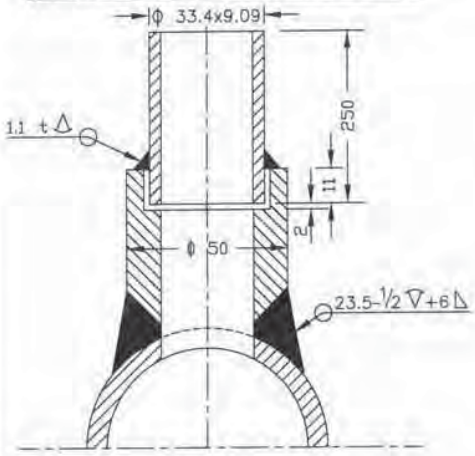

(SYSTEM PR.>40Kg/Sq Cm CL 6000)

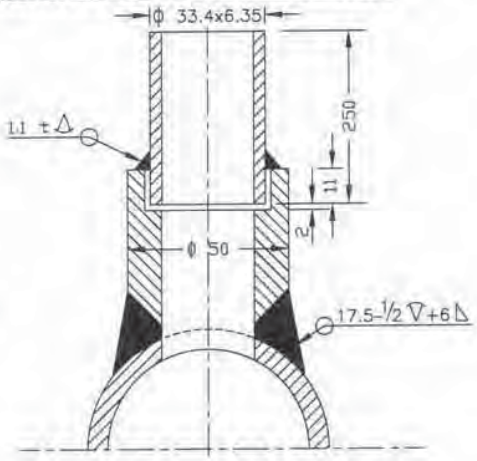

(SYSTEM PR. <40Kg/Sq cm Nb 25 CL 3000)

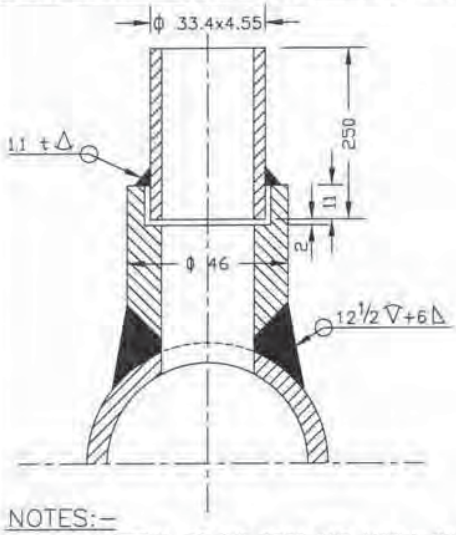

(SYSTEM PR. <40Kg/Sq cm Nb 15 CL 3000)

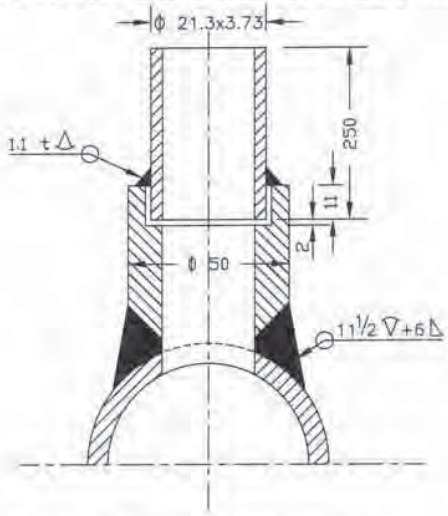

NOTES:-

1. MATERIAL OF THE BOSS AND NIPPLE SHALL BE THE SAME AS THE PIPE INTO WHICH IT IS WELDED AND CONFIRM TO ANSI B 16.11.
2. THE LENGTH OF THE NIPPLE SHOULD BE 250mm.
3. THE OTHER END OF THE NIPPLE SHALL BE SOCKET WELDED WITH 1" GLOBE VALVE OF MATERIAL AS PER ANSI B 16.1.
4. TWO ISOLATED VALVES ARE TO BE USED FOR PRESSURE = >40 Kg/Cm2.
5. EDGE HOLE MUST BE CLEAN AND SQUARE OR ROUNDED SLIGHTLY (1/64" RADIUS) FREE FROM BURRS, WIRE EDGES OR OTHER IRREGULARITIES.
6. ORIENTATION OF TAP WILL BE VARY WITH TYPE OF PROCESS FLUID AND NATURE OF RUN OF THE PIPE.
7. ACTIVITIES TO BE COMPLETED AT THE SHOP, WELD THE COUPLING (OR BOSS) ON THE PIPE AND DRILL PRESSURE CONNECTION HOLE (SAME AS I D OF NIPPLE) IN THE PIPE IN ALLIGNMENT WITH HOLE IN THE COUPLING.
8. ALL DIMENSIONS ARE IN mm UNLESS OTHERWISE STATED.

FOR TENDER PURPOSE ONLY

REV. NO.	DESCRIPTION	DRAWN	DESIGN	CHKD.	M	E	C	C&I	ARCH.	APPD.	DATE
A	FIRST ISSUE							T.G.			

CLEARED BY

NTPC — N T P C LIMITED (A GOVERNMENT OF INDIA ENTERPRISE) ENGINEERING DIVISION

PROJECT: TYPICALTHERMAL POWER PROJECT

TITLE: INSTRUMENT SOURCE CONNECTION DETAILS

SIZE	SCALE	DRG. NO.	REV. NO.
A4	N.T.S.	0000-999-POI-A-035 Sh-2 OF 14	A

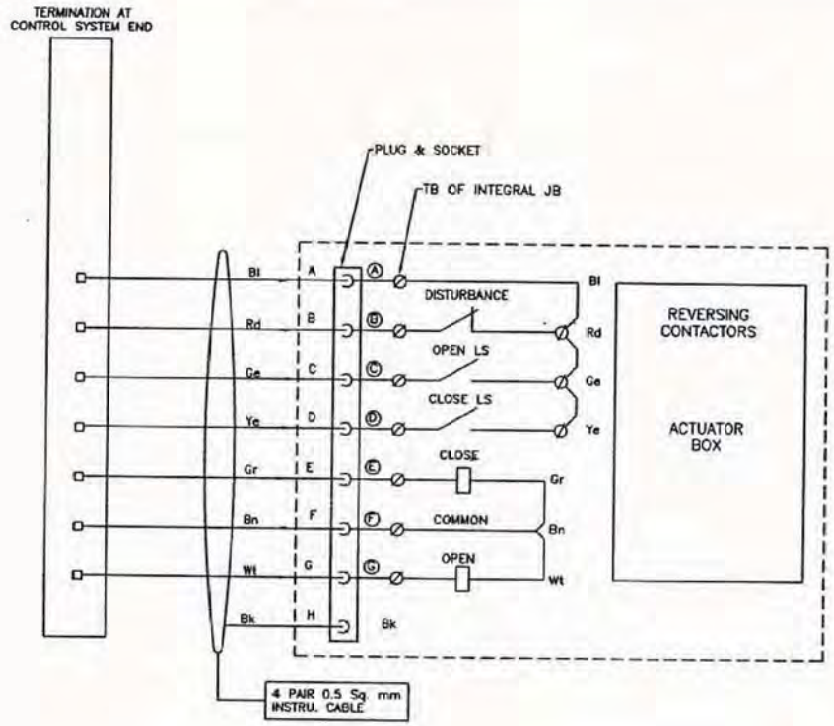

This document is the property of NATIONAL THERMAL POWER CORPORATION LTD.
No part of this document will be reproduced by any means without the written permission.

FOR TENDER PURPOSE ONLY

एन टी पी सी लिमिटेड
NTPC LIMITED
(A GOVERNMENT OF INDIA ENTERPRISE)
ENGINEERING DIVISION

PROJECT: TYPICAL THERMAL POWER PROJECT

TITLE: INTERFACING OF ACTUATORS

REV.NO.	DESCRIPTION	DRAWN	DESIGN	CHKD.	M	E	C	C&I	ARCH.	APPD	DATE
A	FIRST ISSUE										22.04.06

CLEARED BY

SIZE	SCALE	DRG. NO.	REV. NO.
A3	N.T.S.	0000-999-POI-A-063	A

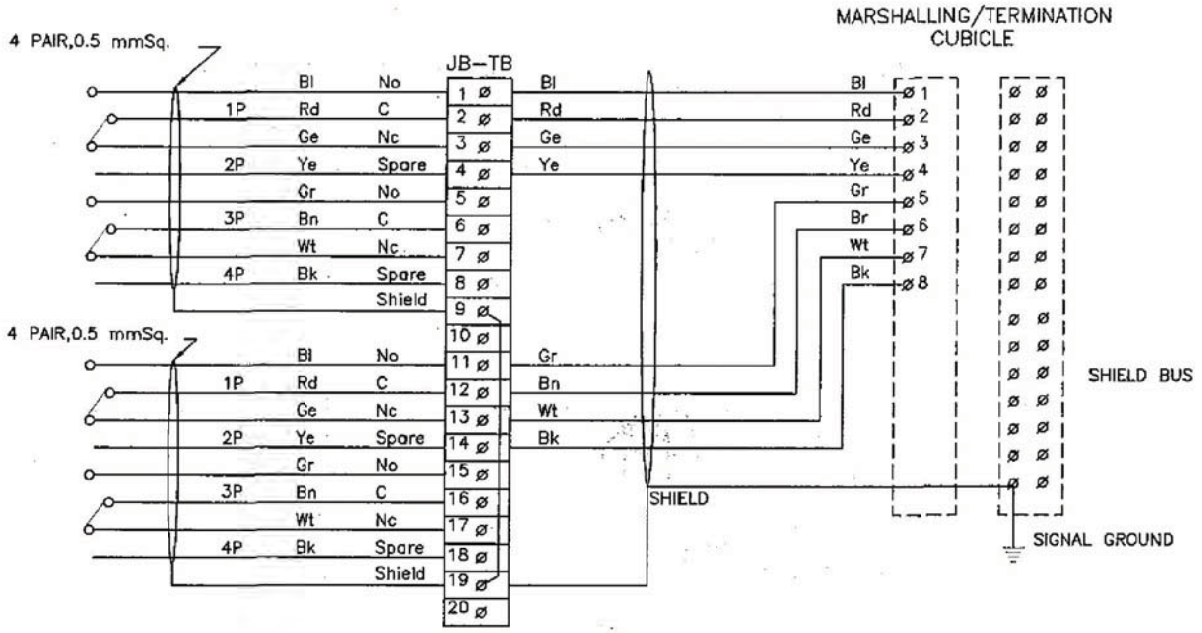

FOR TENDER PURPOSE ONLY

एन टी पी सी लिमिटेड
NTPC LIMITED
(A GOVERNMENT OF INDIA ENTERPRISE)
ENGINEERING DIVISION

PROJECT: TYPICAL THERMAL POWER PROJECT

TITLE: INTERFACING OF FIELD INSTRUMENTS/ SWGR SWITCH (COC) TERMINATION DETAILS

REV.NO.	DESCRIPTION	DRAWN	DESIGN	CHKD.	M	E	C	C&I	ARCH.	APPD	DATE
A	FIRST ISSUE										29.04.06

CLEARED BY

SIZE	SCALE	DRG. NO.	REV. NO.
A3	NTS	0000-999-POI-A-065 SH 01 OF 14	A

This document is the property of NATIONAL THERMAL POWER CORPORATION LTD.
No part of this document will be reproduced by any means without the written permission.

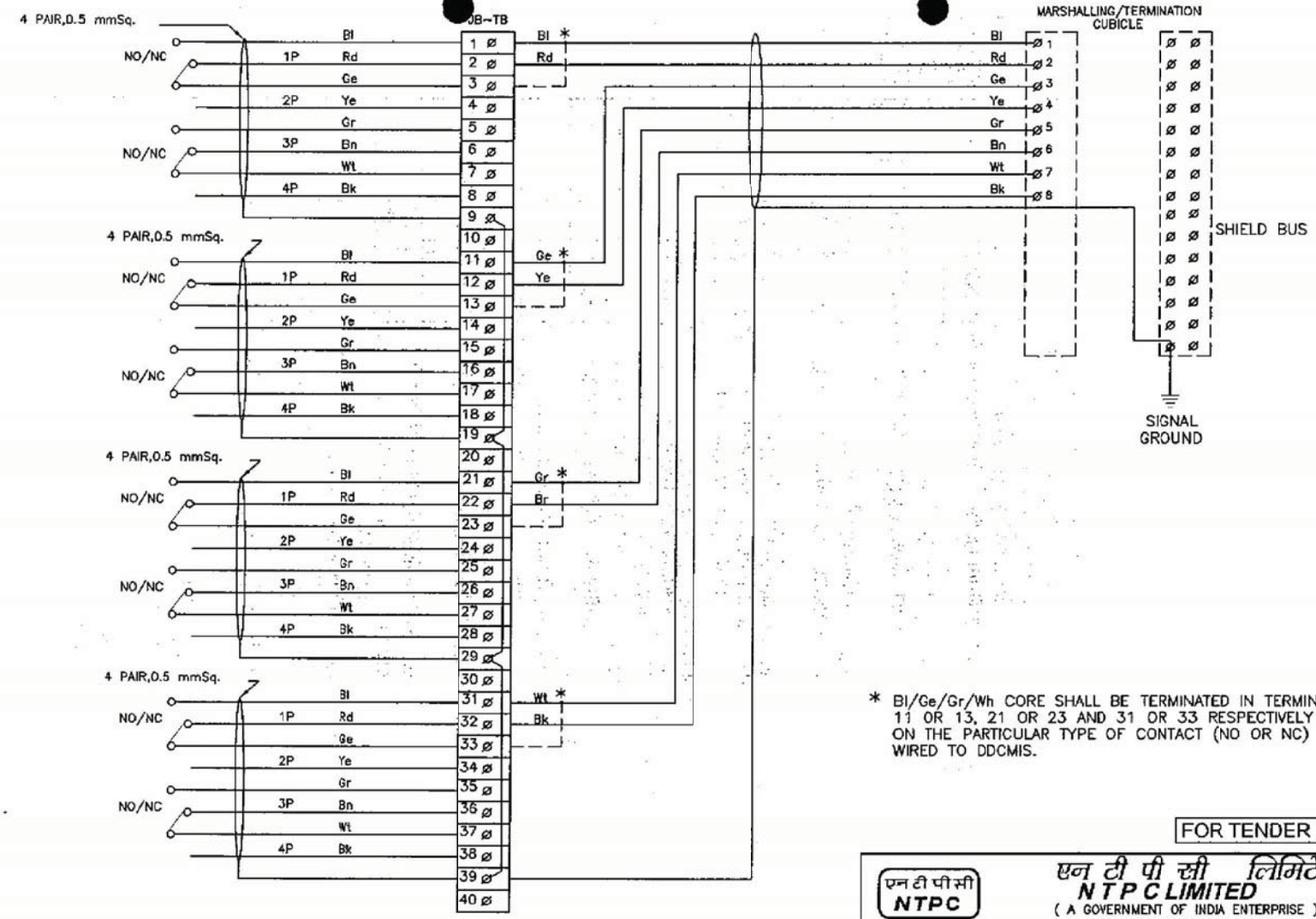

FOR TENDER PURPOSE ONLY

एन टी पी सी लिमिटेड
NTPC LIMITED
(A GOVERNMENT OF INDIA ENTERPRISE)
ENGINEERING DIVISION

PROJECT: TYPICAL THERMAL POWER PROJECT

TITLE: INTERFACING OF FIELD INSTRUMENTS SWITCH TERMINATION DETAILS NO/NC

REV.NO.	DESCRIPTION	DRAWN	DESIGN	CHKD.	M	E	C	C&I	ARCH.	APPD	DATE
A	FIRST ISSUE										29.04.08

CLEARED BY.

SIZE	SCALE	DRG. NO.	REV. NO.
A3	NTS	0000-999-POI-A-065 SH 02 OF 14	A

This document is the property of NATIONAL THERMAL POWER CORPORATION LTD.
No part of this document will be reproduced by any means without the written permission.

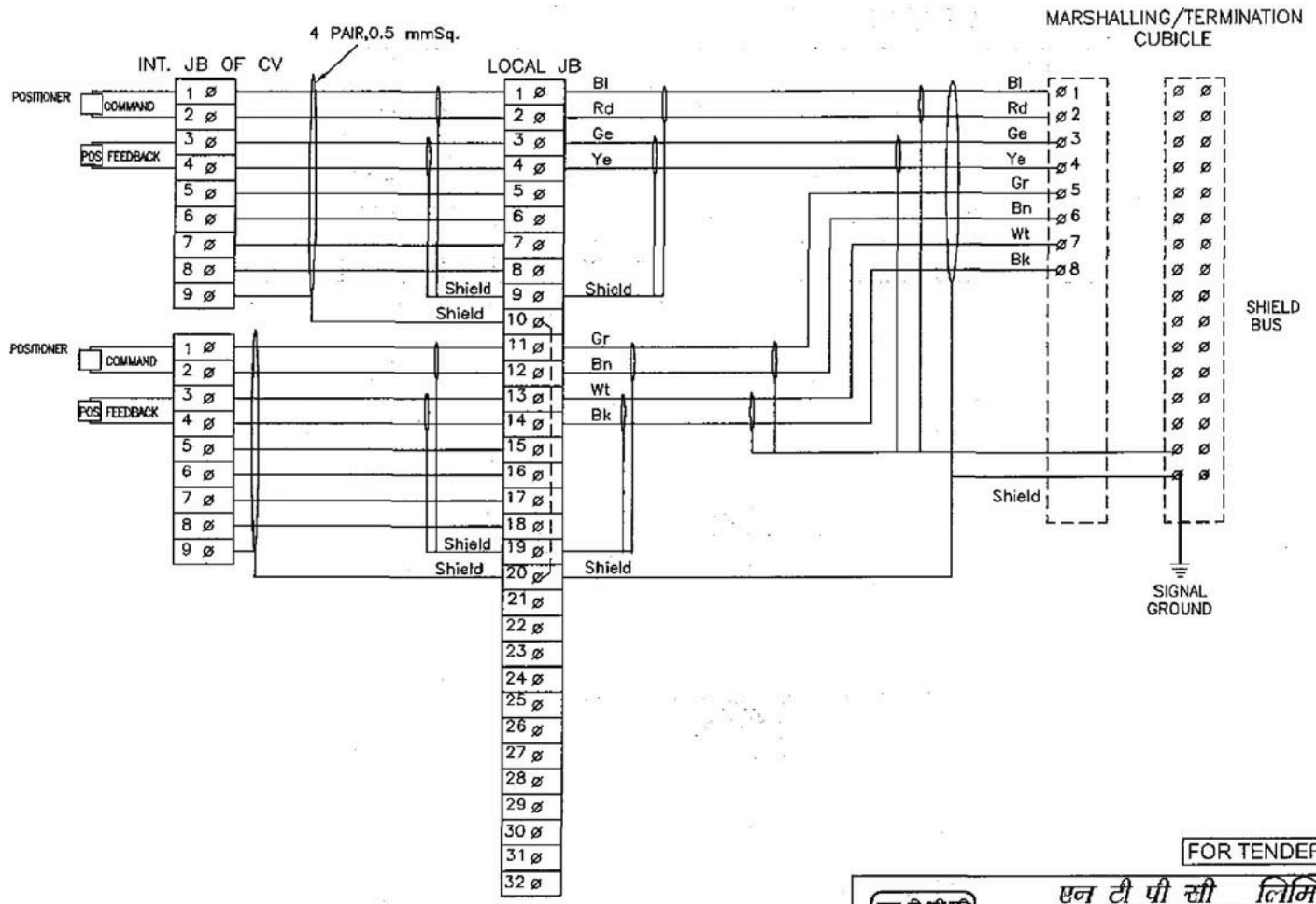

This document is the property of NATIONAL THERMAL POWER CORPORATION LTD.
No part of this document will be reproduced by any means without the written permission.

FOR TENDER PURPOSE ONLY

एन टी पी सी लिमिटेड
NTPC LIMITED
(A GOVERNMENT OF INDIA ENTERPRISE)
ENGINEERING DIVISION

PROJECT: TYPICAL THERMAL POWER PROJECT

TITLE: INTERFACING OF FIELD INSTRUMENTS CONTROL VALVE

REV.NO.	DESCRIPTION	DRAWN	DESIGN	CHKD	M	E	C	C&I	ARCH.	APPD	DATE
A	FIRST ISSUE										29.04.06

CLEARED BY

SIZE	SCALE	DRG. NO.	REV. NO.
A3	NTS	0000-999-POI-A-065 SH 03 OF 14	A

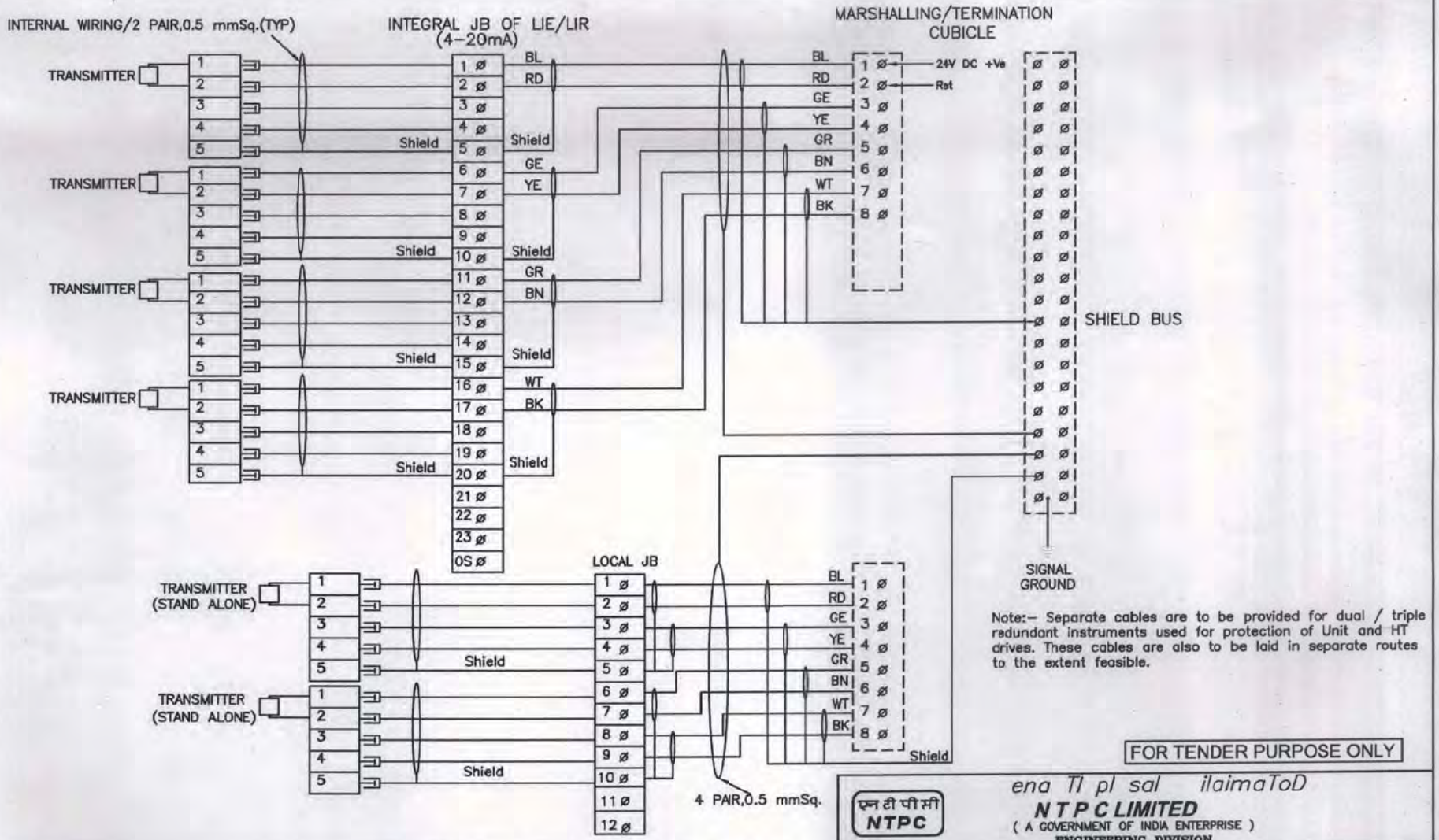

Note:– Separate cables are to be provided for dual / triple redundant instruments used for protection of Unit and HT drives. These cables are also to be laid in separate routes to the extent feasible.

FOR TENDER PURPOSE ONLY

This document is the property of NATIONAL THERMAL POWER CORPORATION LTD. No part of this document will be reproduced by any means without the written permission.

एन टी पी सी NTPC

ena Tl pl sal ilaimaToD

NTPC LIMITED

(A GOVERNMENT OF INDIA ENTERPRISE)

ENGINEERING DIVISION

REV.NO.	DESCRIPTION	DRAWN	DESIGN	CHKD.	M	E	C	C&I	ARCH.	APPD	DATE
C	NOTE REGARDING CABLE IS ADDED.										10.12.13
B	INTERNAL WIRING FOR LIE/LIR MOUNTED SHOWN WIRING OF STAND ALONE TXTR SHOWN										10.12.06
A	FIRST ISSUE										12.1.05

CLEARED BY

PROJECT: TYPICAL THERMAL POWER PROJECT

TITLE: INTERFACING OF FIELD INSTRUMENTS 4-20mA

SIZE	SCALE	DRG. NO.	REV. NO.
A3	NTS	0000-999-POI-A-065 SH 04 OF 14	C

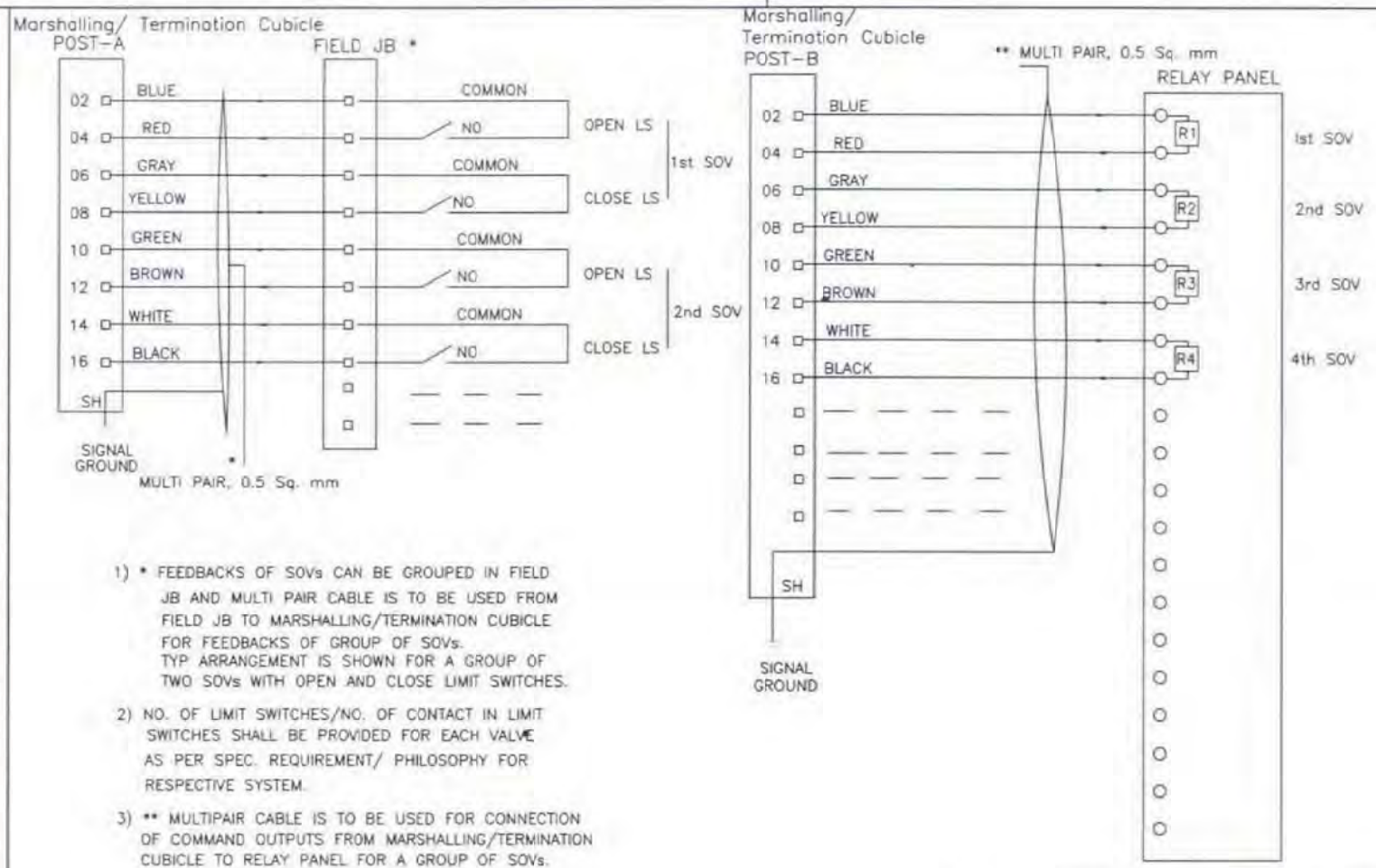

1) * FEEDBACKS OF SOVs CAN BE GROUPED IN FIELD JB AND MULTI PAIR CABLE IS TO BE USED FROM FIELD JB TO MARSHALLING/TERMINATION CUBICLE FOR FEEDBACKS OF GROUP OF SOVs. TYP ARRANGEMENT IS SHOWN FOR A GROUP OF TWO SOVs WITH OPEN AND CLOSE LIMIT SWITCHES.

2) NO. OF LIMIT SWITCHES/NO. OF CONTACT IN LIMIT SWITCHES SHALL BE PROVIDED FOR EACH VALVE AS PER SPEC. REQUIREMENT/ PHILOSOPHY FOR RESPECTIVE SYSTEM.

3) ** MULTIPAIR CABLE IS TO BE USED FOR CONNECTION OF COMMAND OUTPUTS FROM MARSHALLING/TERMINATION CUBICLE TO RELAY PANEL FOR A GROUP OF SOVs.

This document is the property of NATIONAL THERMAL POWER CORPORATION LTD. No part of this document will be reproduced by any means without the written permission.

एन टी पी सी NTPC
नैशनल थर्मल पावर कारपोरेशन लिमिटेड
National Thermal Power Corporation Ltd.
(A GOVERNMENT OF INDIA ENTERPRISE)
ENGINEERING DIVISION

PROJECT: TYPICAL THERMAL POWER PROJECT

TITLE: INTERFACING OF FIELD INSTRUMENTS
INTERFACE OF DDCMIS WITH MCC/SWGR/ACTUATOR
(SINGLE COIL SOLENOID)

REV.NO.	DESCRIPTION	DRAWN	DESIGN	CHKD.	M	E	C	C&I	ARCH.	APPD	DATE
B	FIRST ISSUE										30.10.02

CLEARED BY

SIZE	SCALE	DRG. NO.	REV. NO.
A3	NTS	0000-999-POI-A-065 SH 08 OF 14	C

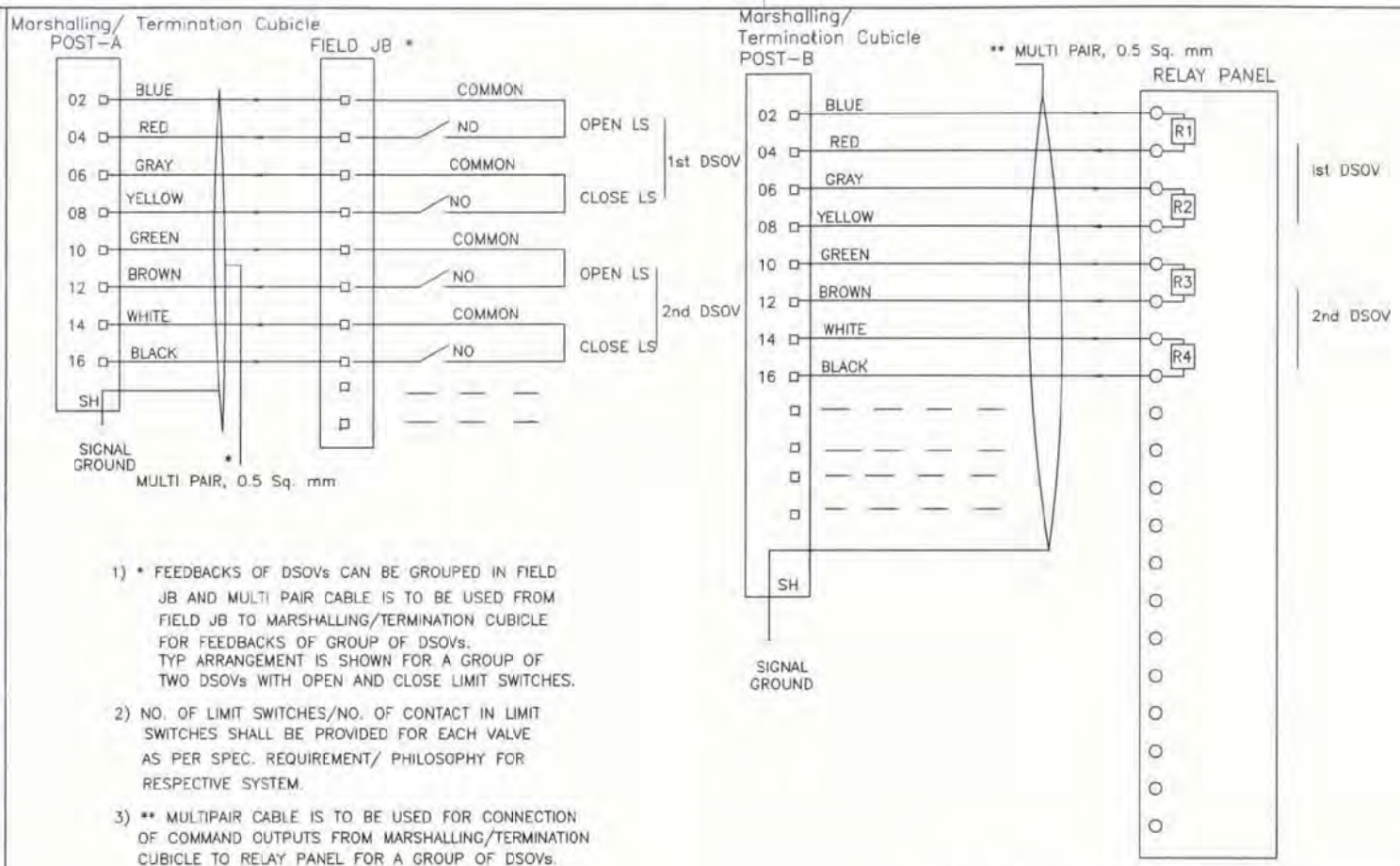

1) * FEEDBACKS OF DSOVs CAN BE GROUPED IN FIELD JB AND MULTI PAIR CABLE IS TO BE USED FROM FIELD JB TO MARSHALLING/TERMINATION CUBICLE FOR FEEDBACKS OF GROUP OF DSOVs. TYP ARRANGEMENT IS SHOWN FOR A GROUP OF TWO DSOVs WITH OPEN AND CLOSE LIMIT SWITCHES.

2) NO. OF LIMIT SWITCHES/NO. OF CONTACT IN LIMIT SWITCHES SHALL BE PROVIDED FOR EACH VALVE AS PER SPEC. REQUIREMENT/ PHILOSOPHY FOR RESPECTIVE SYSTEM.

3) ** MULTIPAIR CABLE IS TO BE USED FOR CONNECTION OF COMMAND OUTPUTS FROM MARSHALLING/TERMINATION CUBICLE TO RELAY PANEL FOR A GROUP OF DSOVs.

This document is the property of NATIONAL THERMAL POWER CORPORATION LTD.
No part of this document will be reproduced by any means without the written permission

एन टी पी सी NTPC
नैशनल थर्मल पावर कारपोरेशन लिमिटेड
National Thermal Power Corporation Ltd.
(A GOVERNMENT OF INDIA ENTERPRISE)
ENGINEERING DIVISION

PROJECT: TYPICAL THERMAL POWER PROJECT

TITLE: INTERFACING OF FIELD INSTRUMENTS
INTERFACE OF DDCMIS WITH MCC/SWGR/ACTUATOR
(DOUBLE COIL SOLENOID)

REV.NO.	DESCRIPTION	DRAWN	DESIGN	CHKD.	M	E	C	C&I	ARCH.	APPD	DATE
B	FIRST ISSUE										30.10.02

CLEARED BY

SIZE	SCALE	DRG. NO.	REV. NO.
A3	NTS	0000-999-POI-A-065 SH 09 OF 14	C

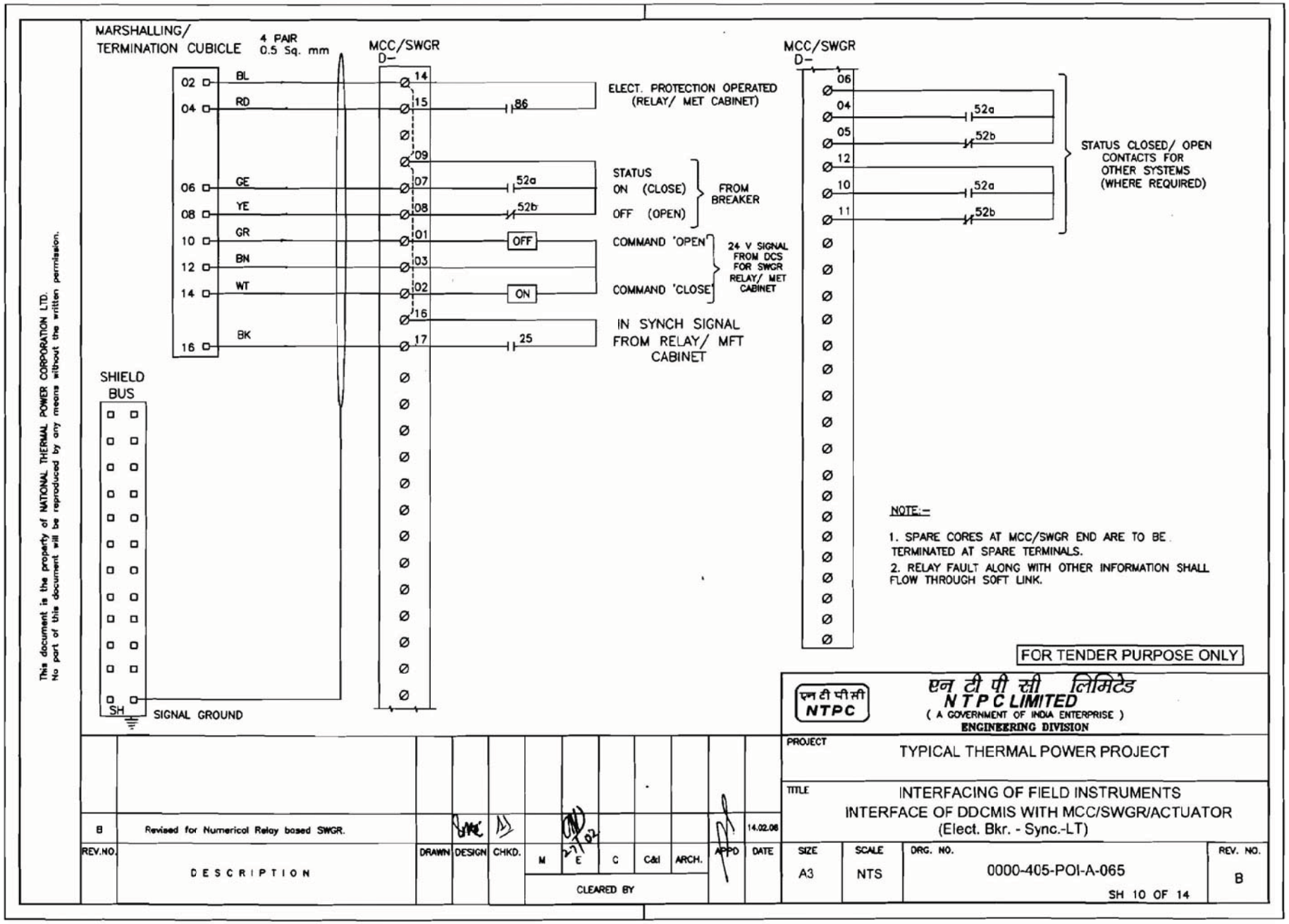
MARSHALLING/
TERMINATION CUBICLE
4 PAIR
0.5 Sq. mm
MCC/SWGR
D-
02 BL
04 RD
06 GE
08 YE
10 GR
12 BN
14 WT
16 BK
14
15
09
07
08
01
03
02
16
17
86
52a
52b
OFF
ON
25
ELECT. PROTECTION OPERATED
(RELAY/ MET CABINET)
STATUS
ON (CLOSE)
OFF (OPEN)
FROM
BREAKER
COMMAND 'OPEN'
COMMAND 'CLOSE'
24 V SIGNAL
FROM DCS
FOR SWGR
RELAY/ MET
CABINET
IN SYNCH SIGNAL
FROM RELAY/ MFT
CABINET
MCC/SWGR
D-
06
04
05
12
10
11
52a
52b
52a
52b
STATUS CLOSED/ OPEN
CONTACTS FOR
OTHER SYSTEMS
(WHERE REQUIRED)
SHIELD
BUS
SH
SIGNAL GROUND
NOTE:-
1. SPARE CORES AT MCC/SWGR END ARE TO BE TERMINATED AT SPARE TERMINALS.
2. RELAY FAULT ALONG WITH OTHER INFORMATION SHALL FLOW THROUGH SOFT LINK.
FOR TENDER PURPOSE ONLY
एन टी पी सी लिमिटेड
NTPC LIMITED
(A GOVERNMENT OF INDIA ENTERPRISE)
ENGINEERING DIVISION
PROJECT
TYPICAL THERMAL POWER PROJECT
TITLE
INTERFACING OF FIELD INSTRUMENTS
INTERFACE OF DDCMIS WITH MCC/SWGR/ACTUATOR
(Elect. Bkr. - Sync.-LT)
B
Revised for Numerical Relay based SWGR.
14.02.08
REV.NO.
DESCRIPTION
DRAWN
DESIGN
CHKD.
M
E
C
C&I
ARCH.
APPD
DATE
CLEARED BY
SIZE
A3
SCALE
NTS
DRG. NO.
0000-405-POI-A-065
SH 10 OF 14
REV. NO.
B
This document is the property of NATIONAL THERMAL POWER CORPORATION LTD.
No part of this document will be reproduced by any means without the written permission.

TYPE TEST REQUIREMENTS

1.00.00 TYPE TEST REQUIREMENTS

1.01.00 General Requirements

1.01.01 The Contractor shall furnish the type test reports of all type tests as per relevant standards and codes as well as other specific tests indicated in this specification. If the bidder proposes a different standard/code from that indicated at table 3.00.00, same is acceptable provided the equivalence of the proposed standard is established by the bidder. A list of such tests are given for various equipment in table titled 'TYPE TEST REQUIREMENT FOR C&I SYSTEMS' at the end of this chapter and under the item Special Requirement for Solid State Equipments/Systems. For the balance equipment instrument, type tests may be conducted as per manufactures standard or if required by relevant standard.

(a) Out of the tests listed, the Bidder/ sub-vendor/ manufacturer is required to conduct certain type tests specifically for this contract (and witnessed by Employer or his authorized representative) even if the same had been conducted earlier, as clearly indicated subsequently against such tests.

(b) For the rest, submission of type test results and certificate shall be acceptable provided.

i. The same has been carried out by the Bidder/ sub-vendor on exactly the same model /rating of equipment.

ii. There has been no change in the components from the offered equipment & tested equipment.

iii. The test has been carried out as per the latest standards alongwith amendments as on the date of Bid opening.

(c) In case the approved equipment is different from the one on which the type test had been conducted earlier or any of the above grounds, then the tests have to be repeated and the cost of such tests shall be borne by the Bidder/ sub-vendor within the quoted price and no extra cost will be payable by the Employer on this account.

1.01.02 As mentioned against certain items, the test certificates for some of the items shall be reviewed and approved by the main Bidder or his authorized representative and the balance have to be approved by the Employer.

1.01.03 The schedule of conduction of type tests/ submission of reports shall be submitted and finalized during pre-award discussion.

1.01.04 For the type tests to be conducted, Contractor shall submit detailed test procedure for approval by Employer. This shall clearly specify test setup, instruments to be used, procedure, acceptance norms (wherever applicable), recording of different parameters, interval of recording precautions to be taken etc. for the tests to be carried out.

1.01.05 The Bidder shall indicate in the relevant BPS schedule, the cost of the type test for each item only for which type tests are to be conducted specifically for this project. The cost shall only be payable after conduction of the respective type test in presence of authorize representative of Employer. If a test is waived off, then the cost shall not be payable.

2.00.00 **SPECIAL REQUIREMENT FOR SOLID STATE EQUIPMENTS/ SYSTEMS**

2.01.00 The minimum type test reports, over and above the requirements of above clause, which are to be submitted for each of the major C&I systems shall be as indicated below:

i) Surge Withstand Capability (SWC) for Solid State Equipments/ Systems

All solid state systems/ equipments shall be able to withstand the electrical noise and surges as encountered in actual service conditions and inherent in a power plant. All the solid state systems/ equipments shall be provided with all required protections that needs the surge withstand capability as defined in ANSI 37.90.1/ IEEE-472. Hence, all front end cards which receive external signals like Analog input & output modules, Binary input & output modules etc. including power supply, data highway, data links shall be provided with protections that meets the surge withstand capability as defined in ANSI 37.90.1/ IEEE-472. Complete details of the features incorporated in electronics systems to meet this requirement, the relevant tests carried out, the test certificates etc. shall be submitted along with the proposal. As an alternative to above, suitable class of EN 61000-4-12 which is equivalent to ANSI 37.90.1/ IEEE-472 may also be adopted for SWC test.

ii) Dry Heat test as per IEC-68-2-2 or equivalent.

iii) Damp Heat test as per IEC-68-2-3 or equivalent.

iv) Vibration test as per IEC-68-2-6 or equivalent.

v) Electrostatic discharge tests as per EN 61000-4-2 or equivalent.

vi) Radio frequency immunity test as per EN 61000-4-6 or equivalent.

vii) Electromagnetic Field immunity as per EN 61000-4-3 or equivalent.

Test listed at item no. v, vi, vii, above are applicable for electronic cards only as defined under item (i) above.

3.00.00 **TYPE TEST REQUIREMENT FOR C&I SYSTEMS**

Sl. No	Item	Test Requirement	Standard	Test To Be Specifically Conducted	NTPC's Approval Req. On Test Certificate
Col 1	Col 2	Col 3	Col 4	Col 5	Col 6
1	Elect. Metering instruments	As per standard (col 4)	IS-1248	No	Yes
2	Transducers	As per standard (col 4)	IEC-60688,IS12784	No	Yes
3	Thermocouple	Degree of protection test	IS-13947	No	No
4	RTD	As per standard (col 4)	IEC-60751	No	No
5	Electronic transmitter	As per standard (col 4)	BS-6447 / IEC-60770	No	Yes
6	E/P converter	As per standard (col 4)	Mfr. standard	No	Yes
7	Dust emission monitor	Degree of protection test	IS-13947	No	Yes
8	Instrumentation Cables Twisted & Shielded*				
	-Conductor	Resistance test	VDE-0815	No	Yes
		Diameter test	IS-10810	No	Yes
		Tin Coating test (Persul-phate test)	IS-8130	No	Yes
	-Insulation	Loss of mass	VDE 0472	No	Yes
		Ageing in air ovens**	VDE 0472	No	Yes

		Short Circuit current capability	IEC 60146-2	No	Yes
13	Voltage Stabilisers	Over Load Test	Approved procedure	No	Yes
		Temp rise test without redundant fans	Approved procedure	No	Yes
14	Public Address System				
	- Amplifiers	As per standard (col 4)	IS 9302, Part-II	No	Yes
	Microphones	As per standard (col 4)	IS 9302, Part-III IS 15482:2004/ IEC 61842(2002)	No	Yes
	Loudspeaker	As per standard (col 4)	IS 9302, Part-IV	No	Yes
15	LIE / LIR	Degree of protection test	IS-13947	No	Yes
16	Flue gas analyzers	Degree of protection test	IS-13947	No	Yes
17	Master Clock	Functional test	As per approved procedure	No	Yes
18	CJC Box	Degree Of protection test	IS-13947	No	Yes
19	Junction Box	Degree Of protection Test	IS-13947	No	Yes

20	OPC Data Access Server, Data Exchange Server & Historical Data Access Server	OPC Compliance Testing		No	Yes (Self certification is also acceptable)
	Conductivity Type Level Switch	Degree of protection test	IS-2147	No	No
	Local Gauges	Degree of protection test	IS-2147	No	No
	Process actuated Switches	Degree of protection test	IS-2147	No	No
	Control Valves	CV test	ISA 75.02	No	Yes
	PLCs	As per standard (Col 4)	IEC 1131	No	No
	Flow Nozzle Orifice plates	Calibration	ASME PTC BS 1042/ ISO 5167	No	Yes

The contractor shall submit for Employers approval the reports of all the type test as per latest IS-10918 **for Nickel Cadmium Batteries, IS-1652 for Lead Acid Plante Batteries** carried out within last ten years from the date of Bid opening and the test(s) should have been either conducted at an independent laboratory or in presence / owners representative. The complete type test reports shall be for any rating of Battery in a particular group based on plate dimensions being manufactured by supplier.

Note:

Type Tests are to be conducted only for the items, which are being supplied as a part of this Package.

SECTION III

SCHEDULE OF PRE-BID CLARIFICATION

All clarification from the Technical Specification shall be filled in by the BIDDER clause by clause in this format only.

VOLUME	SECTION	CLAUSE NO.	PAGE NO.	SPECIFICATION REQUIREMENT	CLARIFICATION	REASONS FOR CLARIFICATION

Note: Bidder to furnish all the pre bid in the above indicated pre bid clarification format only. General Pre bid clarification will not be considered.

COMPLIANCE CUM CONFIRMATION SCHEDULE

The bidder shall confirm compliance with following by signing/ stamping this compliance certificate and furnishing same with the offer:

a.) The scope of supply, technical details, construction features, design parameters etc. shall be as per technical specification & there are no exclusions/ deviations with regard to same.

b.) QP/ test procedures shall be submitted in the event of order based on the guidelines given in the specification & QP enclosed therein. QP will be subject to BHEL/Customer approval in the event of order & customer hold points for inspection/ testing shall be marked in the QP at the contract stage. Inspection/ testing shall be witnessed as per same apart from review of various test certificates/ Inspection records etc.The charges for 3rd party inspection (Lloyds, TUV or equivalent) for imported components shall be included in the base price of the equipment by the bidder.

c.) All drawings/data – sheets etc. to be submitted during contract shall be subject to BHEL/Customer review/ approval. GA drawings, as submitted with offer at tender stage are for reference purpose only and shall be subject to approval during contract stage.

d.) There are no other deviations with respect to specification other than those furnished in the 'Schedule of Deviations'.

e.) The offered materials shall be either equivalent or superior to those specified. Also for components where material is not specified it shall be suitable for intended duty, materials shall be subject to approval in the event of order.

f.) The commissioning spares (if any) are supplied on 'As Required Basis' & prices for same included in the base price (If bidders reply to this is "No commissioning spares are required" and if some spares are actually required during commissioning same shall be supplied by bidder without any cost to BHEL).

g.) All sub vendors shall be subject to BHEL/CUSTOMER approval.

h.) Any special tools & tackles, if required, shall be in bidder's scope.

i.) Demonstration parameters shall stand valid till the satisfactory completion of demonstration test and its acceptance by BHEL/Customer.

DECLARATIONS

I……..……certify that all the technical data and information pertaining to this specification are correct and are true representation of the equipment/ system covered by our format proposal number Dated ……and there is no deviation to the specification.

I hereby certify that I am duly authorized representative of the Bidder's company whose name appears above my signature.

Bidders Company Name …….

Authorized representative's Signature ……..

Name:

Bidder's Name:

The bidder hereby agrees to fully comply with the requirements and intent of this specification for the price indicated.

SCHEDULE OF DEVIATIONS WITH COST OF WITHDRAWL

PROJECT:- TELANGANA SUPER THERMAL POWER PROJECT PHASE-I (2 X 800 MW) SG PKG.

PACKAGE:- CHEMICAL DOSING SYSTEM

TENDER ENQUIRY REFERENCE:-

NAME OF VENDOR:-

SL NO	VOULME/ SECTION	PAGE NO.	CLAUSE NO.	TECHNICAL SPECIFICATION/ TENDER DOCUMENT	COMPLETE DESCRIPTION OF DEVIATION	COST OF WITHDRAWL OF DEVIATION	REFERENCE OF PRICE SCHEDULE ON WHICH COST OF WITHDRAWL OF DEVIATION IS APPLICABLE	NATURE OF COST OF WITHDRAWL OF DEVIATION (POSITIVE/ NEGATIVE)	REASON FOR QUOTING DEVIATION
TECHNICAL DEVIATIONS									
COMMERCIAL DEVIATIONS									

PARTICULARS OF BIDDERS/ AUTHORISED REPRESENTATIVE

NAME	**DESIGNATIONS**	**SIGN & DATE**	

NOTES:

1. For self manufactured items of bidder, cost of withdrawl of deviation will be applicable on the basic price (i.e. excluding taxes, duties & freight) only.
2. For directly dispatchable items, cost of withdrawl of deviation will be applicable on the basic price including taxes, duties & freight.
3. All the bidders have to list out all their Technical & Commercial Deviations (if any) in detail in the above format.
4. Any deviation not mentioned above and shown separately or found hidden in offer, will not be taken cognizance of.
5. Bidder shall submit duly filled unpriced copy of above format indicating "quoted" in "cost of withdrawl of deviation" column of the schedule above along with their Techno-commercial offer, wherever applicable.
6. Bidder shall furnish price copy of above format along with price bid.
7. The final decision of acceptance/ rejection of the deviations quoted by the bidder shall be at discretion of the Purchaser.
8. Bidders to note that any deviation (technical/commercial) not listed in above and asked after Part-I opening shall not be considered.
9. For deviations w.r.t. Payment terms, Liquidated damages, Firm prices and submission of E1/ E2 forms before claiming 10% payment, if a bidder chooses not to give any cost of withdrawl of deviation loading as per Annexure-VIII of GCC, Rev-06 will apply. For any other deviation mentioned in un-priced copy of this format submitted with Part-I bid but not mentioned in priced copy of this format submitted with Priced bid, the cost of withdrawl of deviation shall be taken as NIL.
10. Any deviation mentioned in priced copy of this format, but not mentioned in the un-priced copy, shall not be accepted.
11. All techno-commercial terms and conditions of NIT shall be deemed to have been accepted by the bidder, other than those listed in unpriced copy of this format.
12. Cost of withdrawl is to be given seperately for each deviation. In no event bidder should club cost of withdrawl of more than one deviation else cost of withdrawl of such deviations which have been clubbed together shall be considered as NIL.
13. In case nature of cost of withdrawl (positive/negative) is not specified it shall be assumed as positive.
14. In case of descrepancy in the nature of impact (positive/ negative), positive will be considered for evaluation and negative for ordering.