FIRST ANGLE PROJECTION

(ALL DIMENSIONS ARE IN mm)

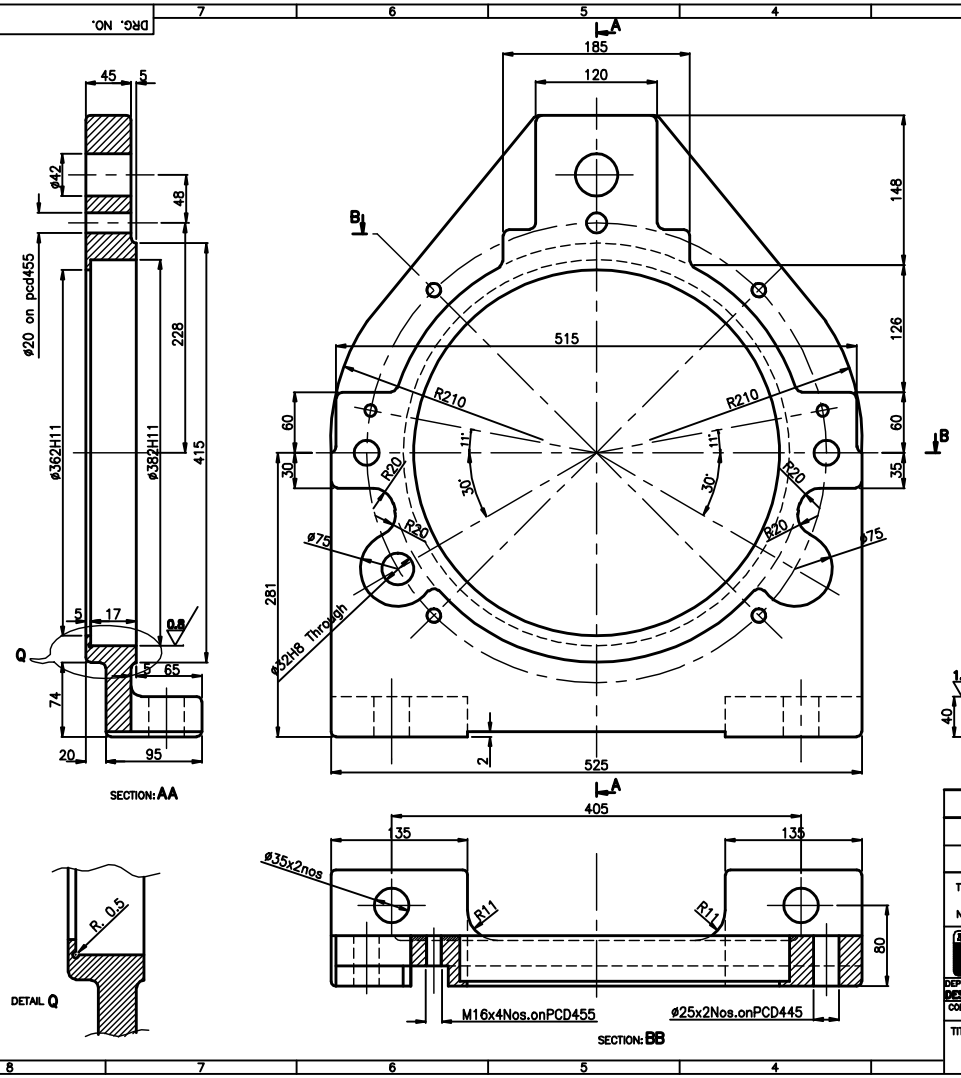

DESCRIPTION	STEEL CASTING CS 120 Mn 12	AA 195 03 IS:276, Gr:1	1	
	DRAWING NO.	MATL. CODE / MATL. SPEC.	Gr. Wt. / QTY.	Net Wt.

TYPE OF PRODUCT: 140 Ton winch assly. impregnation plant — INV. No: 02-1676

NAME OF CUSTOMER/PROJECT: sling bearing Drum — FILE No.:998

BHARAT HEAVY ELECTRICALS LTD. HYDERABAD

	NAME	SIGN.	DATE	NO.OF VAR.
DRN.	K.SRINIVASULU		06.07.08	
CHD.	R.VISHWAL		06.07.08	
APPD.	G.S.MURTHY		06.07.08	

DEPT. M.&S DESIGNS CODE 335	GRADE OF TOL.DIM. C/M/F	SCALE NTS	WEIGHT (KG)	REF. TO ASSY DRG.	ITEM NO.	NO.OF ITEMS

TITLE: SIDE COVER

CARD CODE

DRAWING NO. 2-RS-2126 — REV. 00

SHEET No. 1 — NO OF SHEETS 1

THE INFORMATION ON THIS DOCUMENT IS THE PROPERTY OF BHARAT HEAVY ELECTRICALS LIMITED. IT MUST NOT BE USED DIRECTLY OR INDIRECTLY IN ANY DETRIMENTAL TO THE INTEREST OF THE COMPANY

INVENTORY NO | SIGN. AND DATE | REF. DWG. NO.