DRAWING NO: 2-93-170-05335

ALL DIMENSIONS ARE IN MILLIMETERS

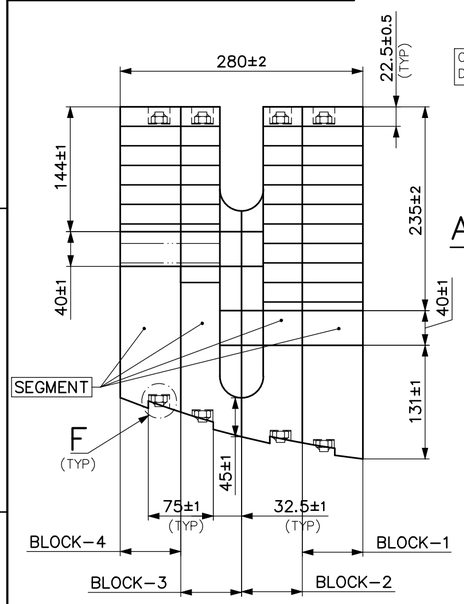

VIEW-C
(SEE NOTE-9)

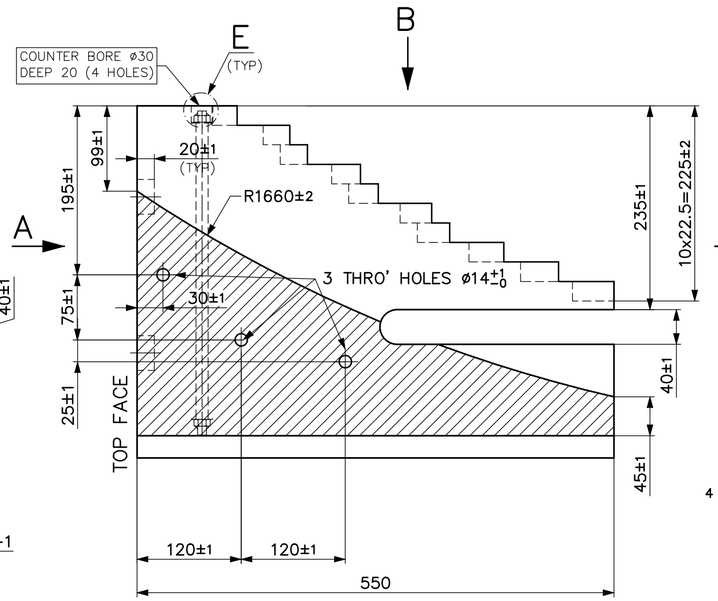

SECTION-DD

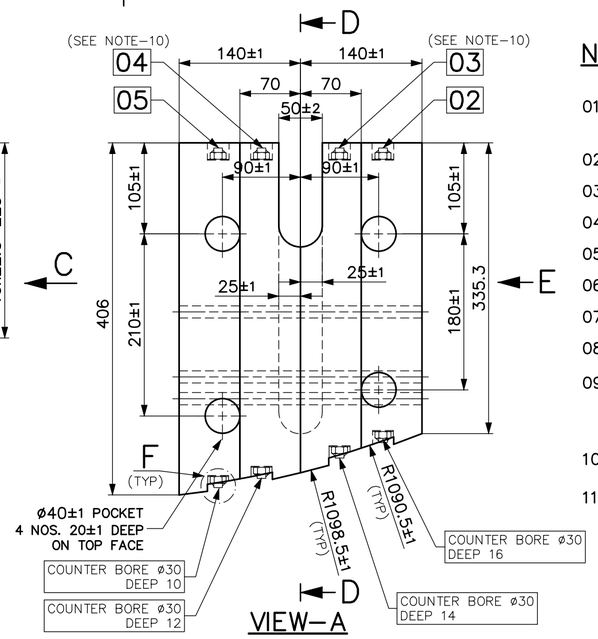

VIEW-A

NOTES:-

01. CONTOUR INCREASED BY 5 MM OVER TUBE OD TO TAKE CARE OF LENGTH VARIATION DURING TUBE ASSEMBLY.
02. AFTER INSTALLATION OF SG AT SITE, THE WOODEN BLOCK WILL BE TAKEN-OUT OF SG.
03. MATERIAL FOR THE WOODEN BLOCK SHALL BE SEASONED TEAK WOOD.
04. QUANTITY REQUIRED : 2 NOS/SG
05. WOODEN BLOCK (2 OR 4 PIECES) SHALL BE MACHINED TOGETHER.
06. EACH WOODEN BLOCK SEGMENT SHALL BE MADE OUT OF A SINGLE PIECE ONLY.
07. USAGE OF METALLIC NAILS IS STRICTLY PROHIBITED.
08. NAILING OF WOODEN STRIPS OR LOOSE WOODEN PIECES IS STRICTLY PROHIBITED.
09. PASTING OF BLOCK-1&2 AND BLOCK-3&4 IS PERMITTED. HOWEVER PASTING OF BLOCK-2&3 IS NOT PERMITTED. THE PASTING MATERIAL SHALL BE USED AFTER APPROVAL FROM CUSTOMER.
10. M10 STUD & NUTS SHALL BE TACK WELDED AT 3 PLACES WITH SUITABLE CARE.
11. THE STUD SHOULD BE 2 mm INSIDE FROM WOOD OUTER FACE.

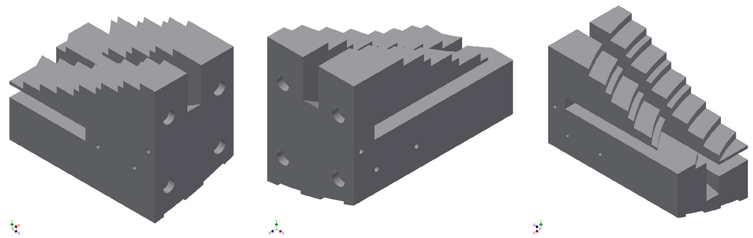

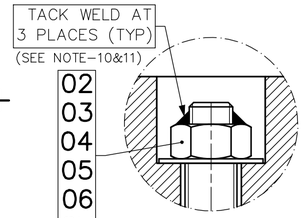

DETAIL-E

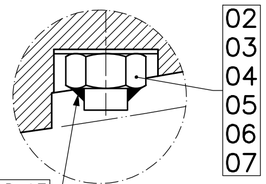

DETAIL-F

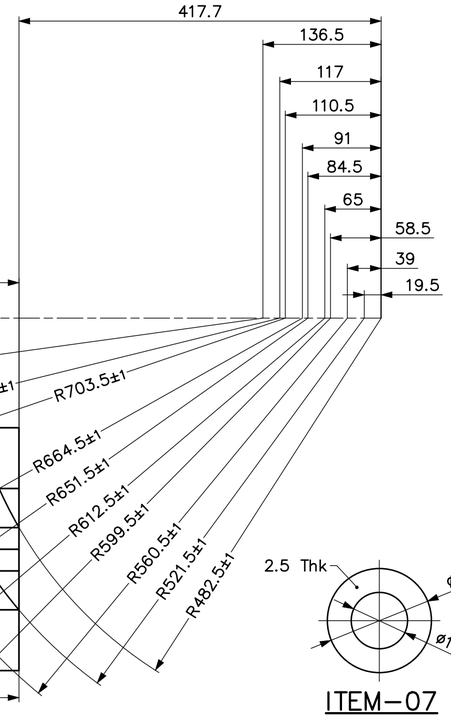

VIEW-B

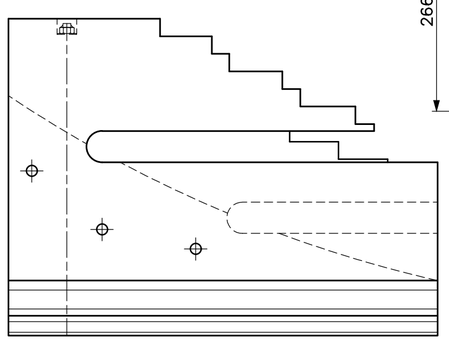

VIEW-E

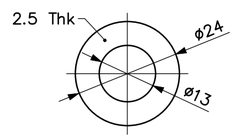

ITEM-07

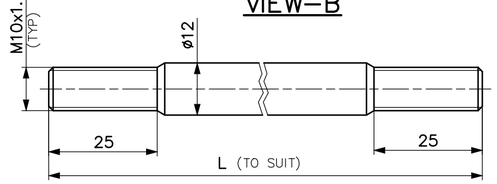

STUD

VARIANT NUMBER	ITEM NUMBER	DESCRIPTION	STD	DRAWING NUMBER/SIZE	ITEM NO / VAR NO	MATERIAL CODE / MATERIAL SPECN	A/C	UNIT / D1	UNIT WEIGHT / QUANTITY	GS	ZONE
	07	WASHER-10				CS			0.003 / 8		
	06	NUT-M10				CS			0.010 / 8		
	05	STUD-4		ROD ø12...395 LG		CS			0.350 / 1		
	04	STUD-3		ROD ø12...385 LG		CS			0.340 / 1		
	03	STUD-2		ROD ø12...360 LG		CS			0.320 / 1		
	02	STUD-1		ROD ø12...340 LG		CS			0.300 / 1		
	01	WOODEN BLOCK-2				TEAK WOOD			23.200		

TOLERANCE IF NOT SPECIFIED SHALL BE AS BELOW (REFER IS:2102-m)

LINEAR				ANGULAR	
0.5 TO 3	±0.1	400 TO 1000	±0.8	0 TO 10	± 1°
3 TO 6	±0.1	1000 TO 2000	±1.2	10 TO 50	±30'
6 TO 30	±0.2	2000 TO 4000	±2.0	50 TO 120	±20'
30 TO 120	±0.3	—	—	120 TO 400	±10'
120 TO 400	±0.5	—	—	OVER 400	±5'

REV	DATE	ALTERED :
01		CHD&APPD :

CAUTION: The information on this document is the property of BHARAT HEAVY ELECTRICALS LTD. It must not be used directly or indirectly in any way detrimental to the interest of the company.

TYPE OF PRODUCT OR NAME OF CUSTOMER/PROJECT: 700MWe-Steam Generator

W.O.D137 TO D138-001-1-93-170-RAPP-7

Bharat Heavy Electricals Ltd
UNIT: HIGH PRESSURE BOILER PLANT
TIRUCHIRAPALLI - 620014
05-228/D

	NAME	SIGNATURE	DATE	NO. OF VAR
DRN	K.R.		090618	
CHD	RRV		090618	
APPD	A.S.		090618	

DEPT	GRADE OF UNTOL. DIM		SCALE	WEIGHT (Kg)	REF TO ASSY / OLD DWG	ITEM NO	No OF ITEMS
NC	C/M/F			23.200	0-93-170-05125		
CODE 150							

TITLE: OUTER WOODEN BLOCK-2

CARD CODE: U 01

DRAWING NO : 2-93-170-05335

REV: 00

Size A2