FIRST ANGLE PROJECTION

(ALL DIMENSIONS ARE IN mm)

DRG. NO. 1-61-310-01848

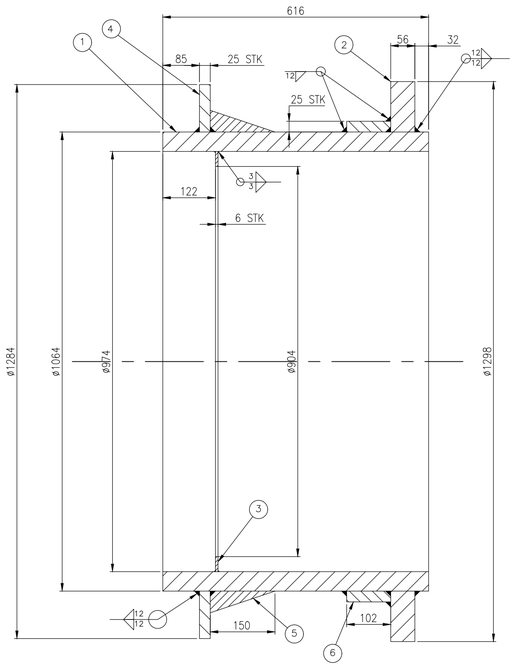

SECTION A–A

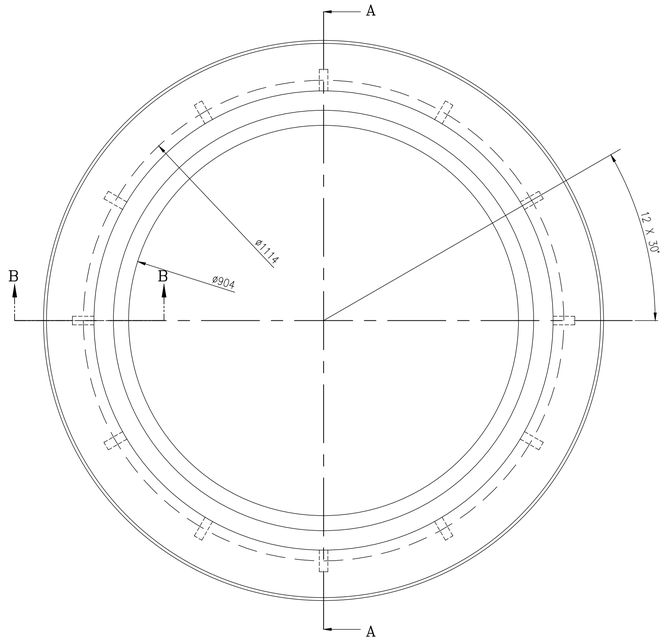

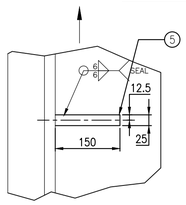

FABRICATION

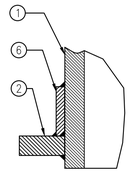

SECTION B–B

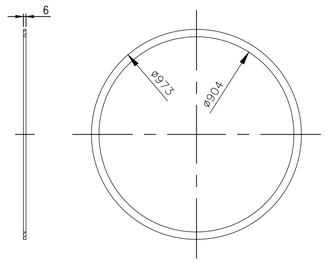

ITEM–03
SCALE 1:2

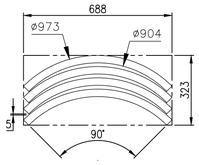

ITEM–03
CUTTING PLAN
SCALE 1:2

WPS WE:001
WPS WE:006

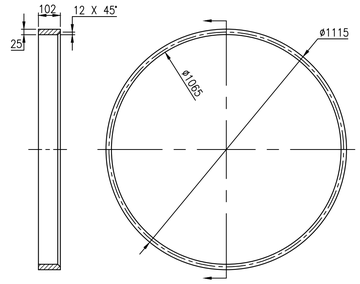

ITEM–06
SCALE 1:2

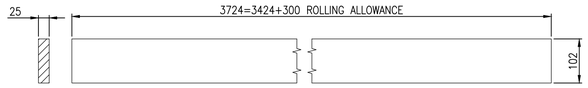

DEVELOPED LENGTH OF ITEM–06

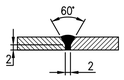

WELDING DETAILS
OF ITEM NO–3

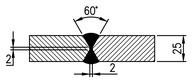

WELDING DETAILS OF
ITEM NO 6

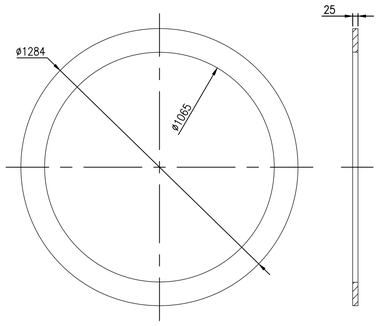

ITEM–04
SCALE 1:2

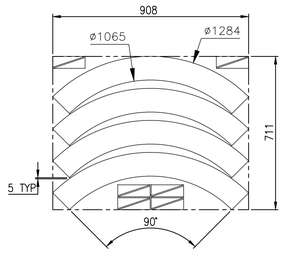

CUTTING PLAN FOR
ITEMS: 04 & 05 (12 PIECES)
SCALE 1:2

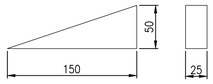

ITEM–05
12 PIECES

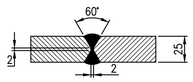

WELDING DETAILS OF
ITEM NO 4

NOTE:–

1. ALL BUTT WELDS TO BE FULL PENETRATION ' X ' WELDS.
2. CARRY OUT LPI AFTER BACK CHIPPING OF ALL BUTT WELDS ASPER AA0850131
3. ALL BUTT WELDS TO BE 10% SPOT RT TESTED AS PER HY0850170 ACCEPTANCE AS PER HY0850170
4. CARRY OUT LPI OF ALL FINISHED WELDS.
5. AFTER COMPLETE FABRICATION, THE HOUSING IS TO BE STRESS RELIEVED

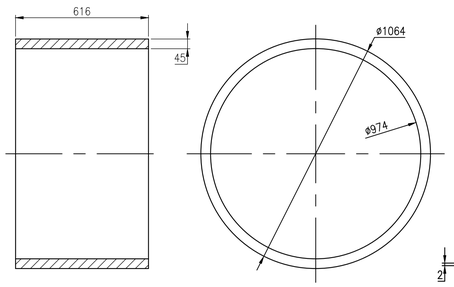

ITEM–01
SCALE 1:2

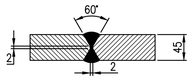

WELDING DETAILS OF
ITEM NO 1

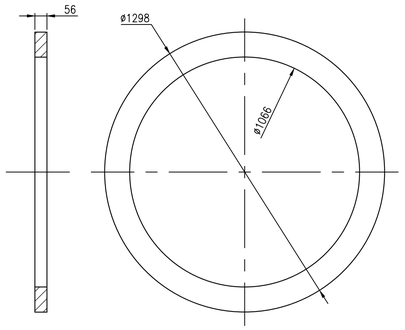

ITEM–02
SCALE 1:2

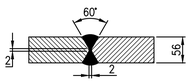

WELDING DETAILS OF
ITEM NO 2

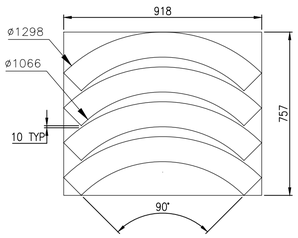

ITEM–02
CUTTING PLAN
SCALE 1:2

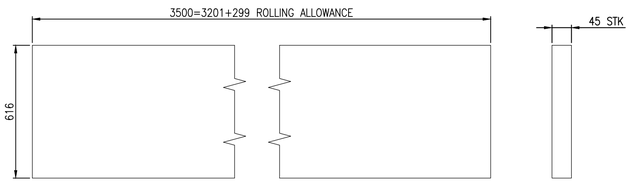

DEVELOPED LENGTH OF ITEM–01

TOTAL GROSS WT: 1034.08 KG

ITEM NO	DESCRIPTION	DRAWING NO.	VAR. NO.	RAW MATERIAL SIZE OR CASTING DRG.NO. OR FORGING DRG.NO.	MATERIAL CODE / MATERIAL SPECN.	NET WT.	GROSS WT. / QUANTITY
6.	PLATE–6			PL. 25 X 107 X 3724	AA1011819155	68.55	78.20
					AA10119	1	
5.	PLATE–5			RAW MATL. SHOWN AT ITEM–04	AA1011819155	8.83	–
					AA10119	1	
4.	PLATE–4			PL. 25 X 716 X 913	AA1011819155	79.29	128.29
					AA10119	1	
3.	PLATE–3			PL. 6 X 328 X 693	AA1011808030	4.79	10.71
					AA10108	1	
2.	PLATE–2			PL. 56 X 767 X 928	AA1011819228	189.36	312.90
					AA10119	1	
1.	PLATE–1			PL. 45 X 626 X 3500	AA1011819201	696.61	773.97
					AA10119	1	

THE FOLLOWING CONDITIONS APPLY EXCEPT OTHERWISE STATED...

1. REF.TO HY0230261 FOR UNSPECIFIED TOLERANCES.
2. CHAMFER M/CD SHARP EDGES 1.2 TO 1.0 AT 45°.
3. INTERNAL M/CD CORNER RADII 1 TO 0.7.
4. THE SURFACE ROUGHNESS WHEREVER NOT SHOWN SHALL BE TAKEN FROM THE SURFACE ROUGHNESS SHOWN OUT SIDE BACK SLASHES GIVEN AT THE TOP MOST RIGHT CORNER OF THE DRG.

TYPE OF PRODUCT OR NAME OF CUSTOMER/PROJECT

भारत हेवी इलेक्ट्रिकल्स लिमिटेड हैदराबाद
BHARAT HEAVY ELECTRICALS LTD. HYDERABAD

	NAME	SIGN.	DATE	NO.OF VAR.
DRN.	ASHOK REDDY		09.11.12	
CHD.	AMAN		09.11.12	–NA–
APPD.	S.G		09.11.12	

DEPT.	SCALE	WEIGHT (KG)	REF. TO ASSY DRG.	ITEM NO.	NO.OF ITEMS
PULV	1:6	1047.44	1–61–310–01843	01	03

CODE 446

TITLE: BEARING HOUSING OUTER (FABRICATION)

DRAWING NO. 1–61–310–01848 REV. 03

SHEET NO. 01 NO OF SHEETS 01

REV.	DATE	ALTERED	CHECKED	APPD.
03	20.6.19	SHARP	AMAN	APPD.S.GHATGE
02	31.07.14	SHARP	AMAN	APPD.S.GHATGE
01	10.04.13	SHARP	AMAN	APPD.S.GHATGE

ITEM 7,TIMMING BAR REMOVED.

RT REQUIREMENT WAS 100% FOR BUTT WELDS.

DIM 122 ADDED (SEE SECTION:A–A)

THE INFORMATION ON THIS DOCUMENT IS THE PROPERTY OF BHARAT HEAVY ELECTRICALS LIMITED. IT MUST NOT BE USED DIRECTLY OR INDIRECTLY IN ANY WAY DETRIMENTAL TO THE INTREST OF THE COMPANY.

COMPUTER FILE NAME : | REF. DRG. NO. D–PLVD–3860–01 | SIGN. AND DATE | INVENTORY NO