DRAWING NO. 0-62-411-00018

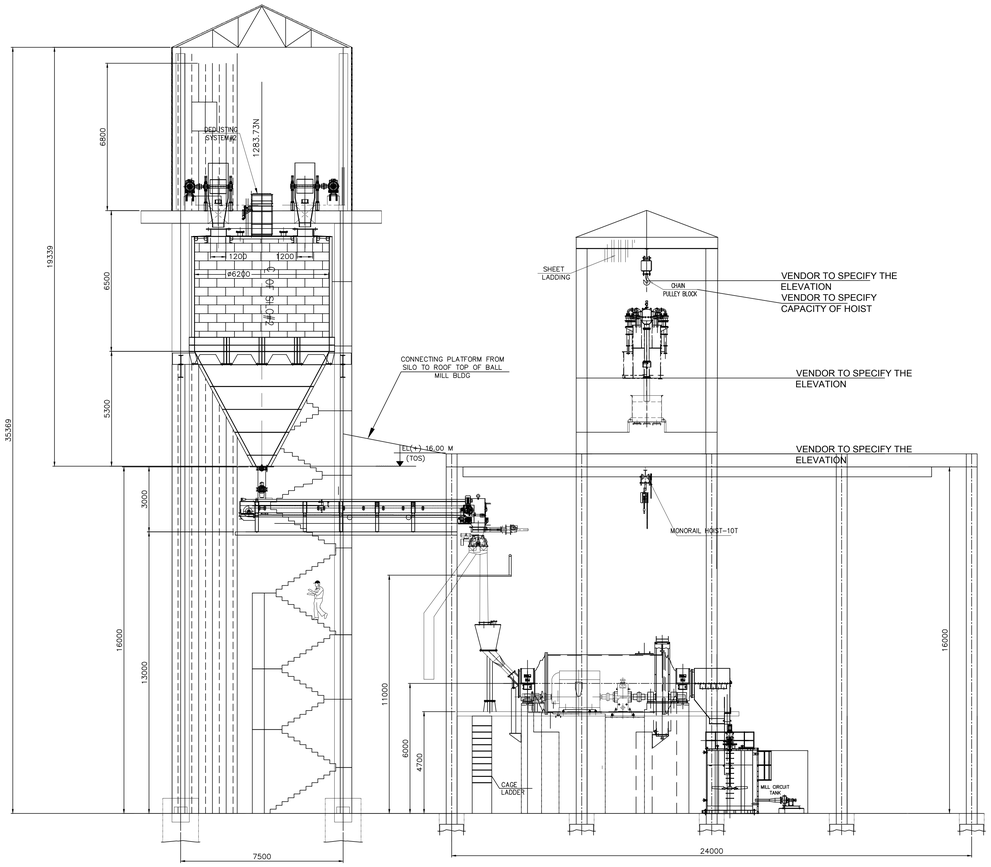

VIEW B-B

SECTION C-C

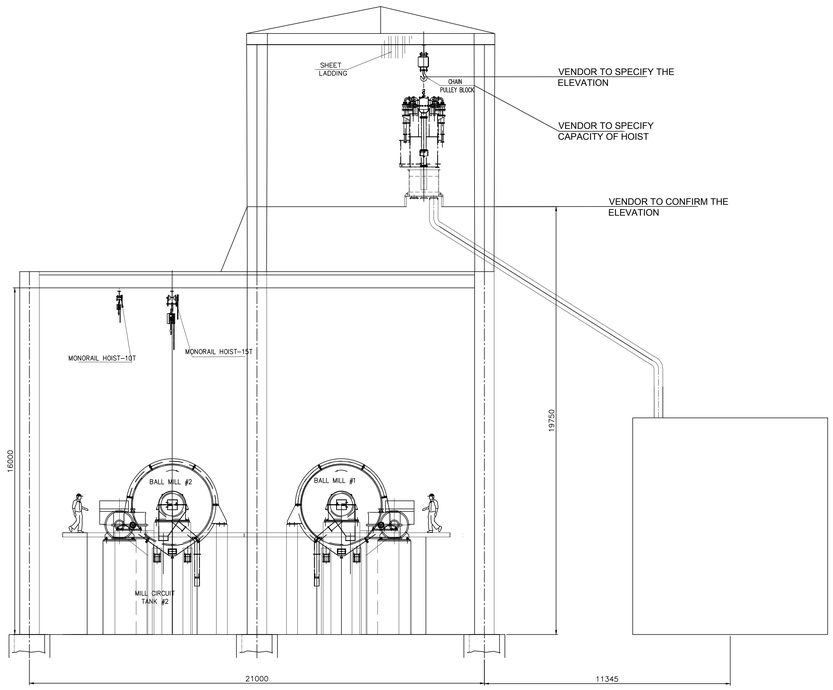

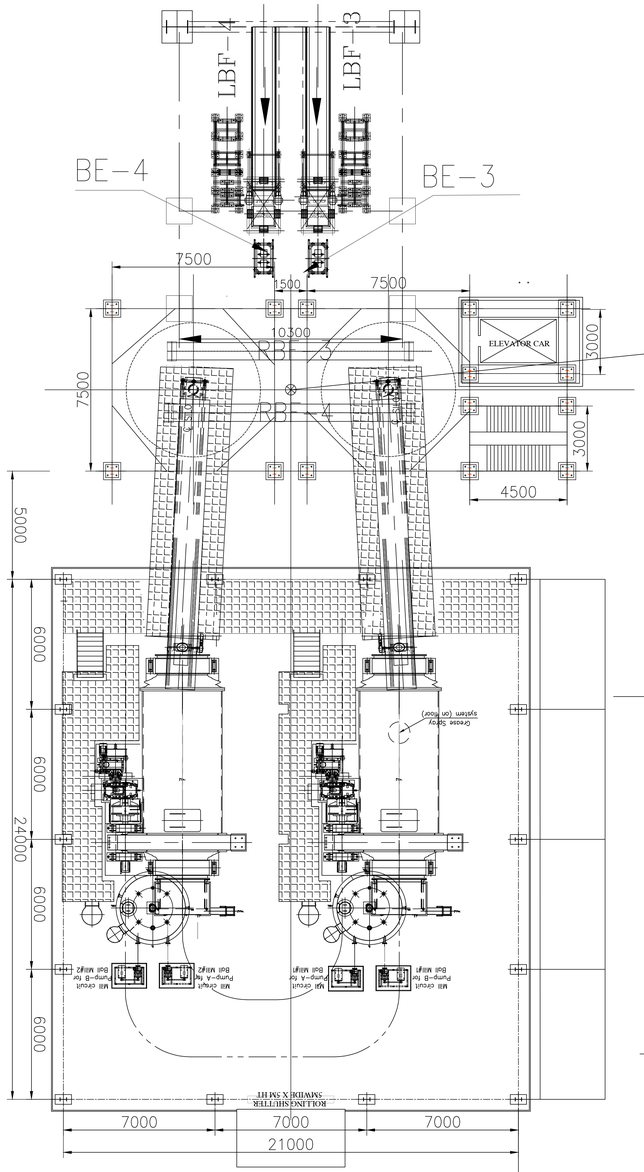

E 9108.213
N 1775.805

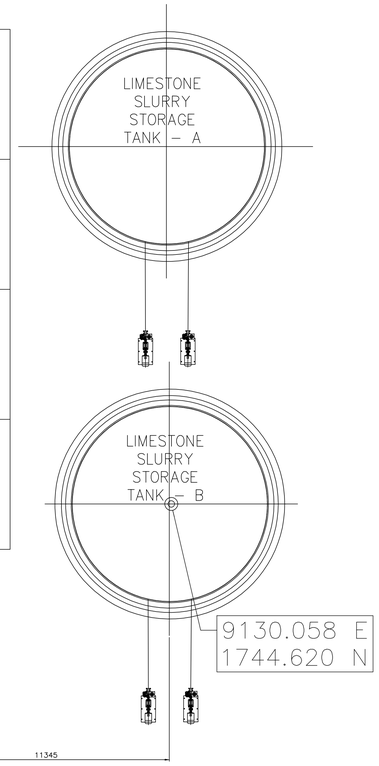

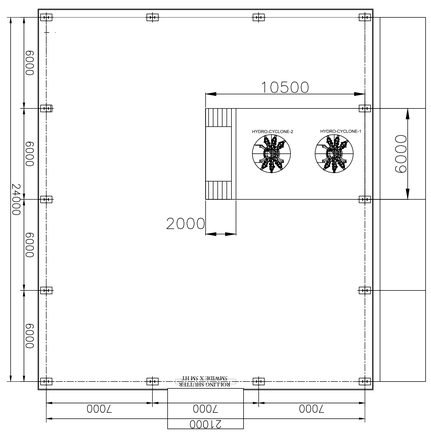

CUST NO. R4R3 R4S3 R4S4

NTPC DRG NO: 9993-109-PVM-B-021

NSPCL LTD.
NSPCL BHILAI EXPANSION POWER PROJECT (2X250MW)

BHARAT HEAVY ELECTRICALS LIMITED
UNIT: HEAVY POWER EQUIPMENT PLANT
RAMACHANDRAPURAM, HYDERABAD-500032

	DEPT CODE	NAME	SIGN	DATE
DRN	M	SHARIFF/UDAY		03.09.2020
CHD		AMAN SURIN		03.09.2020
APPD		SATISH GHATGE		03.09.2020

TITLE: GENERAL ARRANGEMENT OF LIMESTONE DAY SILO AND WET BALL MILL BUILDING

DRAWING NO. 0-62-411-00018 | SCALE : NTS | SHEET 1 OF 2 | REV 00

Size A0

CAUTION: THIS DRAWING IS THE PROPERTY OF BHARAT HEAVY ELECTRICALS LTD.,AND IS NOT TO BE REPRODUCED OR COPIED OR MADE USE OF FOR ANY PURPOSE OTHER THAN THAT FOR WHICH IT IS LOANED.