DRAWING NO. 0-FW-000-01084

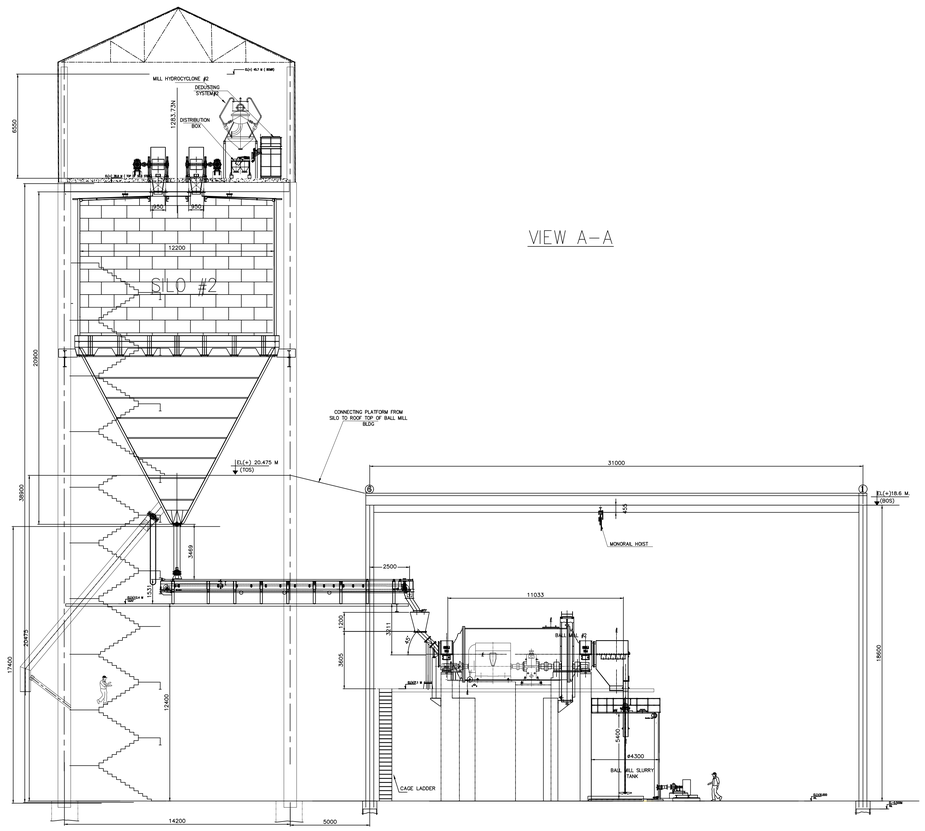


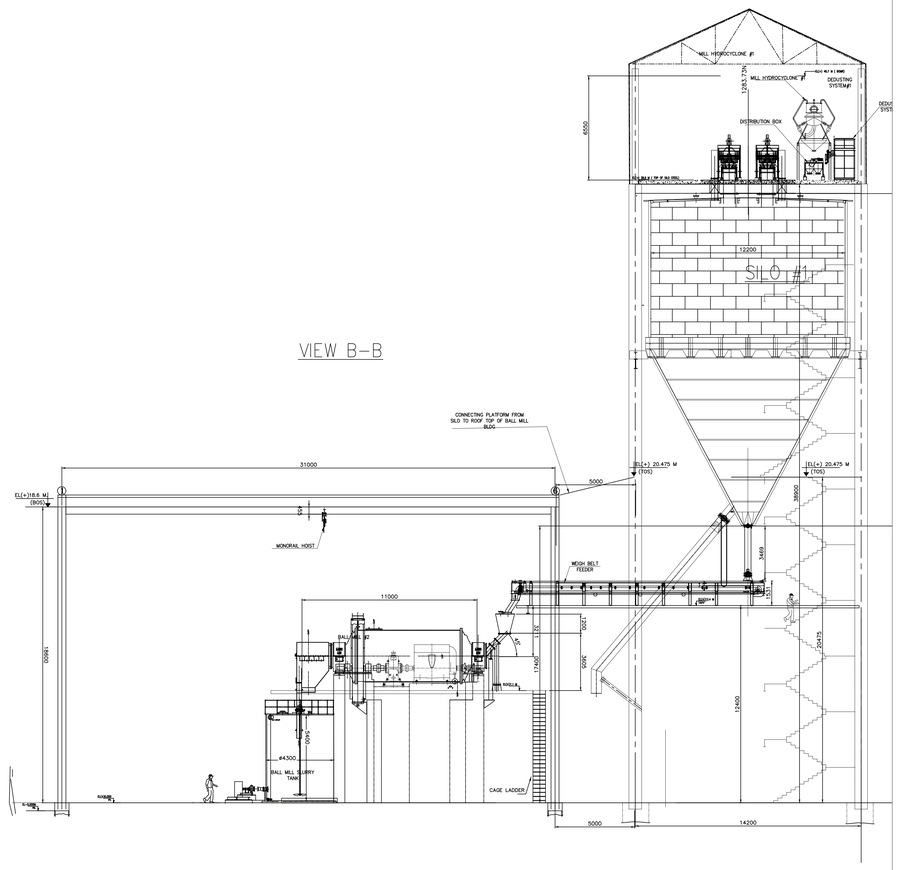


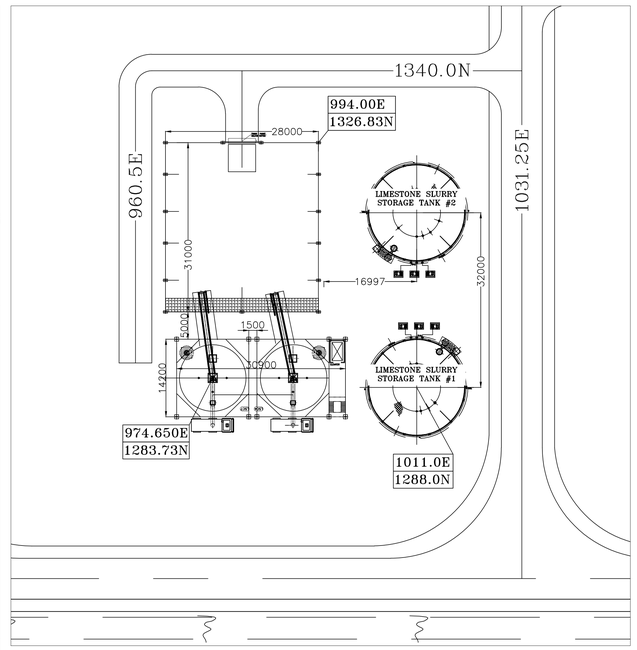


# KEY PLAN

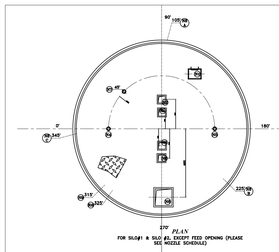

PLAN
FOR SILO#1 & SILO #2, EXCEPT FEED OPENING (PLEASE SEE NOZZLE SCHEDULE)

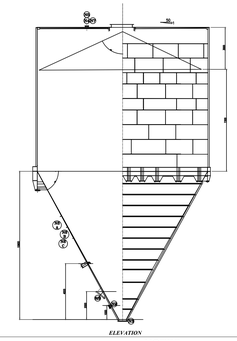

ELEVATION

| ◄ NOZZLE SCHEDULE ► PER SILO SILO | | | | | | |
|---|---|---|---|---|---|---|
| Nozzle. No. | Opening Size | Nos | Flange | Service | Projection | Remarks |
| N1 | 600x600 | 01 | 750x950 | ACCESS HATCH FRAME | 150 | |
| N2, N2A | 1500x900 & 1200x900 | 01 | | LIMESTONE FEED | - | NOR TO SPONGE 10° LE. SILO-2 |
| N3 | 500NB | 01 | ANSI B16.5#150 WELDNECK FLANGE | DISCHARGE | - | |
| N4 | 150NB | 01 | ANSI B16.5#150 | LEVEL TRANSMITTER | 150 | |
| N5 | 150NB | 01 | ANSI B16.5#150 | LEVEL TRANSMITTER | 150 | |
| N6 | 1200x1200 | 01 | 1400x1400 | BAG FILTER MOUNTING | 200 | |
| N7 | 150NB | 01 | ANSI B16.5#150 | SPARE NOZZLE | 150 | |
| N8A,B,C | 150NB | 03 | ANSI B16.5#150 | AIR CANON | 150 | SKEW 90° EE PER DRAWN VIEW |
| N9 | 150NB | 01 | ANSI B16.5#150 | FOGGING NOZZLE | 150 | |
| N10 | 500NB | 01 | ANSI B16.5#150 | EVACUATION NOZZLE | 200 | INCLINED 45° TO VERTICAL |

| DESIGN DATA | | |
|---|---|---|
| DESIGN CODE | - | IS:9178 (PART 1 TO PART 3) |
| STORAGE PRODUCT | - | CRUSHED LIMESTONE (1 INCH SIZE) |
| SILO CAPACITY | M3 | 1374.81 |
| ROOF SLOPE | - | 1 IN 50 |
| BULK DENSITY (VOLUME CALCULATION) | KG/CUM | 1400 |
| BULK DENSITY (WEIGHT CALCULATION) | KG/CUM | 1700 |
| WIND CODE | - | AS PER CONTRACT SPECIFICATION |
| SEISMIC CODE | - | AS PER CONTRACT SPECIFICATION |
| NO. OF SILOS | NO. | 02 |
| DIAMETER (I.D) | MM | 12200 |
| CYLINDRICAL HEIGHT | MM | 12200 |
| CONICAL HOPPER HEIGHT | MM | 12600 |
| ROOF PLATE THICKNESS | MM | 8 |
| SHELL PLATE THICKNESS | MM | 10 |
| CONICAL HOPPER THICKNESS | MM | 12 |
| INSULATION | - | NOT APPLICABLE |
| INSIDE LINING | - | 25,50A 4MM THICK IN CONICAL PORTION ONLY |

| MATERIAL SPECIFICATION | |
|---|---|
| ITEM | MATERIAL |
| SHELL, ROOF, BASE AND SWITCH PLATE | IS:2062 E250 GRADE BR |
| STRUCTURES | IS:2062 E250 GRADE A/BR |
| STAIRWAYS & PLATFORMS | IS:2062 E250 GRADE A/BR |
| MANHOLE | IS:2062 E250 GRADE BR |
| NOZZLE | A106 Gr B |
| NOZZLE FLANGES | IS:2062 E250 GRADE BR |
| NOZZLE REINFORCEMENT | IS:2062 E250 GRADE BR |
| HAND RAILING | IS:1161 |
| BOLT | IS: 1367 CLASS 4.4 |
| FITTINGS | A-105 |
| ANCHOR BOLT | IS:2062 E250 GRADE BR |

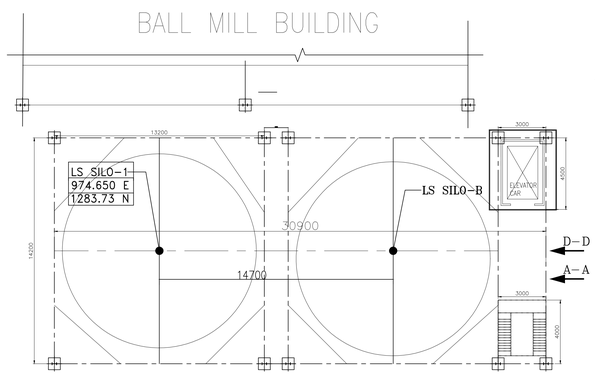


RCC FLOOR PLAN AT EL+0.00M

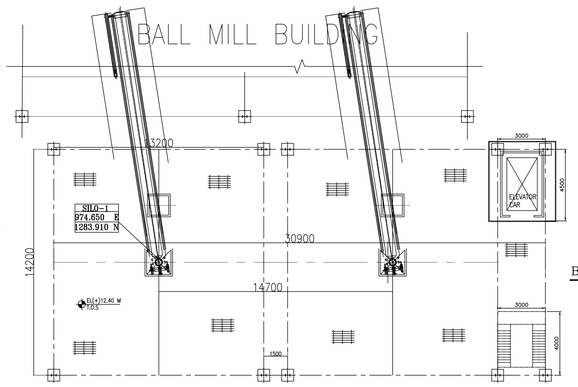


PLAN @ EL(+)12.40M

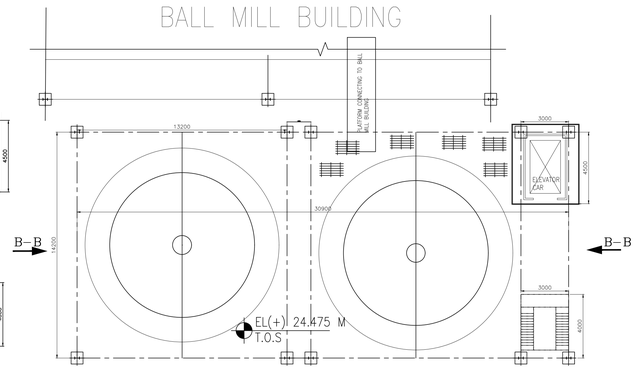


RCC FLOOR PLAN AT EL+20.475M

**LEGEND:-**

| | |
|---|---|
| FGL | - FINISHED GROUND LEVEL |
| FFL | - FINISHED FLOOR LEVEL |
| T.O.PF | - TOP OF PLATFORM |
| TOS/T.O.S | - TOP OF STEEL SECTION |
| B.O.S | - BOTTOM OF STEEL |
| TOC | - TOP OF CONCRETE |
| BOB | - BOTTOM OF BASE PLATE |
| OPENG. | - OPENING |
| TYP | - TYPICAL |
| LS SILO | - LIMESTONE STORAGE SILO |
| BMB | - BALL MILL BUILDING |
| BOMR | - BOTTOM OF MONORAIL |
| T.O.G | - TOP OF GRATING |

NOTES:

1. ALL DIMENSIONS ARE IN MILLIMETRES AND ELEVATIONS IN METRES
2. FINISH FLOOR LEVEL = EL (+)975.50 M,CORRESPONDS TO PLANT EL 0.0M (GROUND FLOOR OF STG BUILDING) FINISHED GROUND LEVEL OF BOP AREAS AS MARKED.
3. THE EQUIPMENT / MACHINERY SIZES SHOWN IN THE DRAWING IS INDICATIVE ONLY AND WILL BE CONFIRMED AFTER VENDOR DATA. THE MAXIMUM ANTICIPATED SIZE AND LOADING IS PROVIDED IN THE DRAWING
4. FLOOR OPENINGS, PIPE CROSSINGS SHALL BE CONFIRMED DURING DETAIL ENGINEERING.
5. DETAILS OF STAIRCASE, SUITABLE DOORS, WINDOWS AND VENTILATORS SHALL BE CONSIDERED BY CIVIL DESIGNER FOR BALL MILL BUILDING.
6. IT IS TO BE NOTED THAT ONE MONORAIL HOIST WILL BE OPERATED WITH FULL LOAD AT A TIME
7. Drg to be read in conjunction with BHEL ISG mech. GA drg 9585-001-155-PVM-B-033

| SL.No. | EQUIPMENTS | QUANTITY |
|---|---|---|
| 01 | SILO | 02 |
| 02 | BALL MILL | 02 |
| 03 | MILLCIRCUIT TANK | 02 |
| 04 | WEIGHT BELT FEEDER | 02 |
| 05 | MOTOR | 02 |
| 06 | MILL HYDRO CYCLONE | 02 |
| 07 | DEDUSTING SYSTEM | 02 |

CUST NO. R4R3 R4S3 R4S4

NTPC DRG NO: 9585-001-109-PVM-B-047

NTPC LTD.
PROJECT: PATRATU SUPER THERMAL POWER STATION
EXPANSION PHASE - I ( 3X 800MW)

BHARAT HEAVY ELECTRICALS LIMITED,
UNIT: HEAVY POWER EQUIPMENT PLANT
RAMACHANDRAPURAM, HYDERABAD-502032

| DEPT CODE | | NAME | SIGN | DATE |
|---|---|---|---|---|
| M | DRN | ABUL/UDAY | | 11.05.2020 |
| | CKD | AMAN SURIN | | 11.05.2020 |
| | APPD | SATISH GHATGE | | 11.05.2020 |

TITLE: LAYOUT AND ELEVATION DETAILS OF BALL MILL BUILDING AND LIMESTONE SLURRY PREPARATION SYSTEM

| REV. | DATE | ALTD. | CKD. | APPD. | REV. | DATE | ALTD. | CKD. | APPD. |
|---|---|---|---|---|---|---|---|---|---|
| -- | - | --- | --- | --- | 02 | 11.05.2020 | ABUL KALAM | AMAN SURIN | S. GHATGE |

DRG IS REVISED AS PER NTPC COMMENTS VIDE TRANSMITTAL No- null109:6288 DATED 21.11.2019.

CAUTION: THIS DRAWING IS THE PROPERTY OF BHARAT HEAVY ELECTRICALS LTD.,IT MUST NOT BE REPRODUCED OR COPIED OR LENT NOR ITS CONTENTS DISCLOSED TO THIRD PARTIES WITHOUT THE PRIOR WRITTEN CONSENT OF BHARHEE OF APPLICATION EXCEPT WHERE PROVIDED FOR AGREEMENT WITH SAID COMPANY.

DRAWING NO. 0-FW-000-01084 | SCALE : NTS | SHEET 1 OF 2 | REV 01

Size A0

DRAWING NO. 0-FW-000-01084

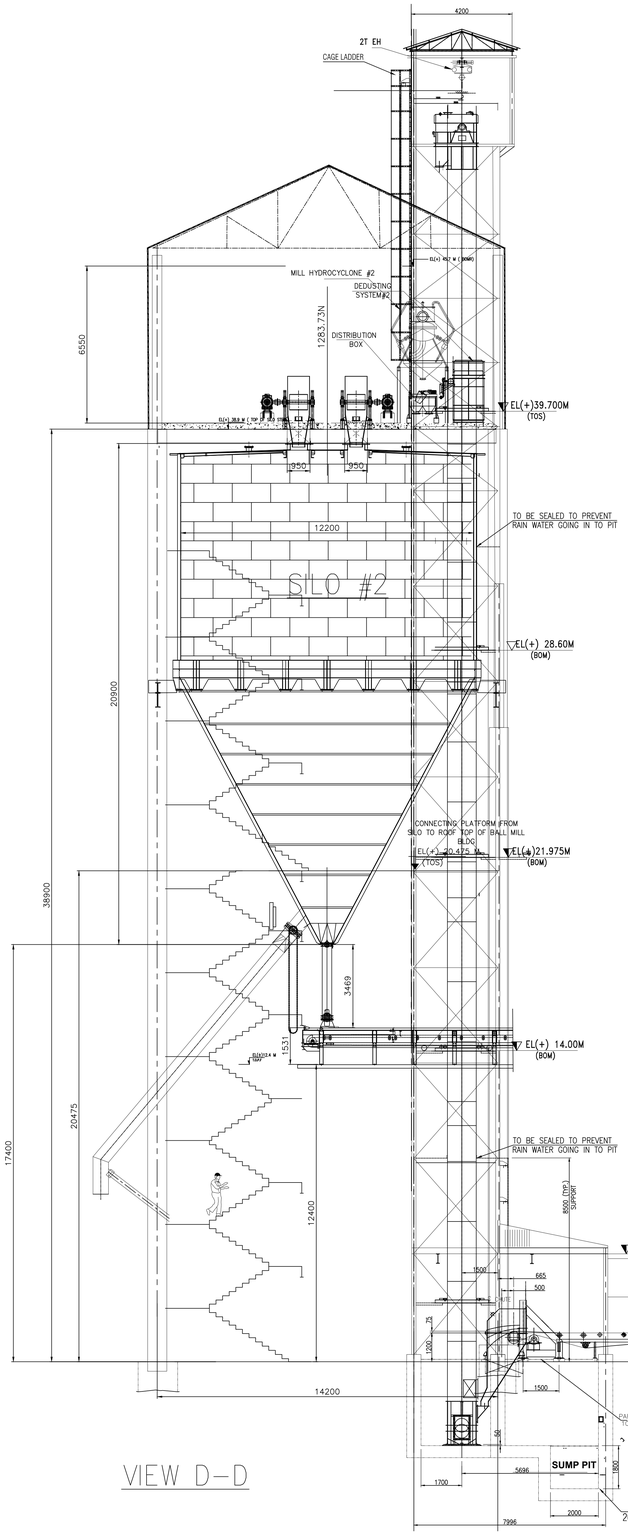


VIEW D-D

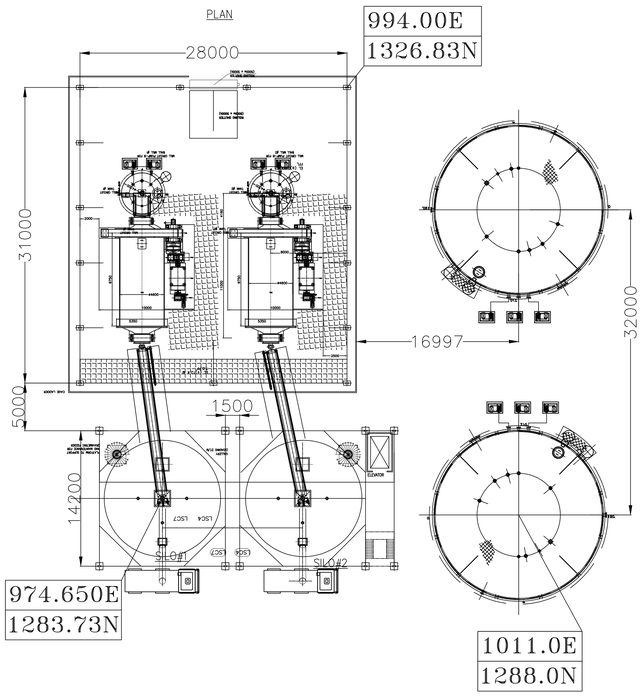


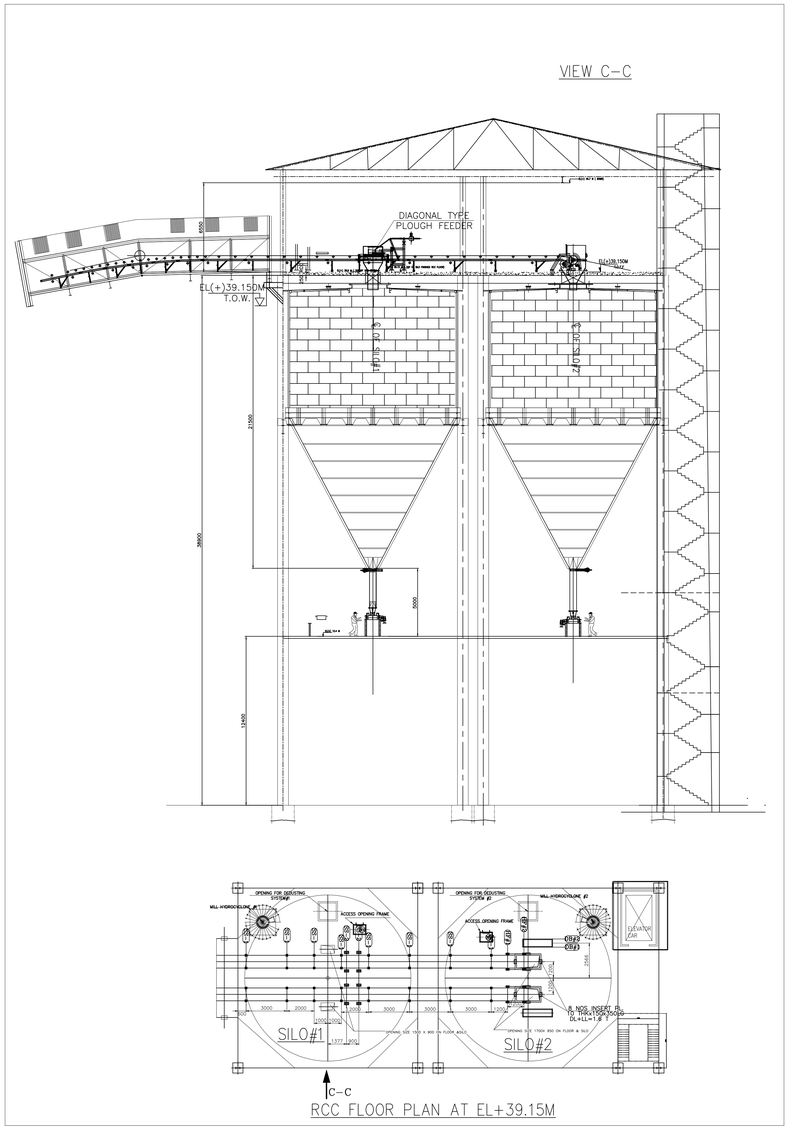


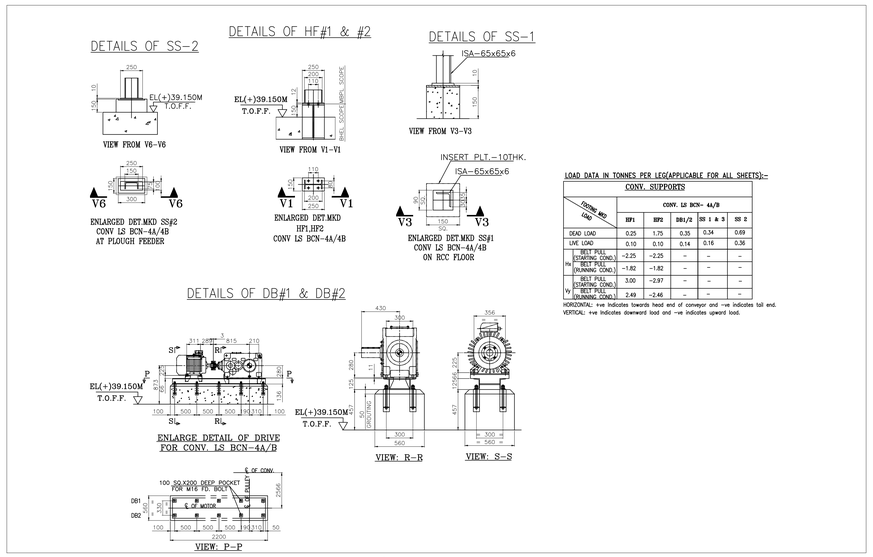


LOAD DATA IN TONNES PER LEG(APPLICABLE FOR ALL SHEETS):-

CONV. SUPPORTS

| | FOOTING MKD / LOAD | CONV. LS BCN- 4A/B | | | | |
|---|---|---|---|---|---|---|
| | | HF1 | HF2 | DB1/2 | SS 1 & 3 | SS 2 |
| | DEAD LOAD | 0.25 | 1.75 | 0.35 | 0.34 | 0.69 |
| | LIVE LOAD | 0.10 | 0.10 | 0.14 | 0.16 | 0.36 |
| H | BELT PULL (STARTING CONDI.) | -2.25 | -2.25 | – | – | – |
| | BELT PULL (RUNNING CONDI.) | -1.82 | -1.82 | – | – | – |
| V | BELT PULL (STARTING CONDI.) | 3.00 | -2.97 | – | – | – |
| | BELT PULL (RUNNING CONDI.) | 2.49 | -2.46 | – | – | – |

HORIZONTAL: +ve indicates towards head end of conveyor and -ve indicates tail end.
VERTICAL: +ve indicates downward load and -ve indicates upward load.

| REV. | DATE | ALTD. | CKD. | APPD. |
|---|---|---|---|---|
| -- | - | --- | --- | --- |
| 02 | 11.05.2020 | ABUL KALAM | AMAN SURIN | S. GHATGE |

DRG IS REVISED AS PER NTPC COMMENTS VIDE TRANSMITTAL No- null109:6288 DATED 21.11.2019.

CUST NO. R4R3 R4S3 R4S4

NTPC DRG NO: 9585-001-109-PVM-B-047

NTPC LTD.
PROJECT: PATRATU SUPER THERMAL POWER STATION
EXPANSION PHASE - I ( 3X 800MW)

BHARAT HEAVY ELECTRICALS LIMITED.
UNIT: HEAVY POWER EQUIPMENT PLANT
RAMACHANDRAPURAM, HYDERABAD-502032

| | DEPT CODE | NAME | SIGN | DATE |
|---|---|---|---|---|
| M | DRN | ABUL/UDAY | | 11.05.2020 |
| | CHD | AMAN SURIN | | 11.05.2020 |
| | APPD | SATISH GHATGE | | 11.05.2020 |

TITLE: LAYOUT AND ELEVATION DETAILS OF BALL MILL BUILDING AND LIMESTONE SLURRY PREPARATION SYSTEM

DRAWING NO. 0-FW-000-01084 | SCALE : NTS | SHEET 2 OF 2 | REV 02

Size A0

THIS DRAWING IS THE PROPERTY OF BHARAT HEAVY ELECTRICALS LTD.,& IS NOT TO BE REPRODUCED OR COPIED OR LENT NOR ITS CONTENTS TO BE DISCLOSED OR DISPATCHED EXCEPT WHERE PROVIDED FOR AGREEMENT WITH BHEL COMPANY.