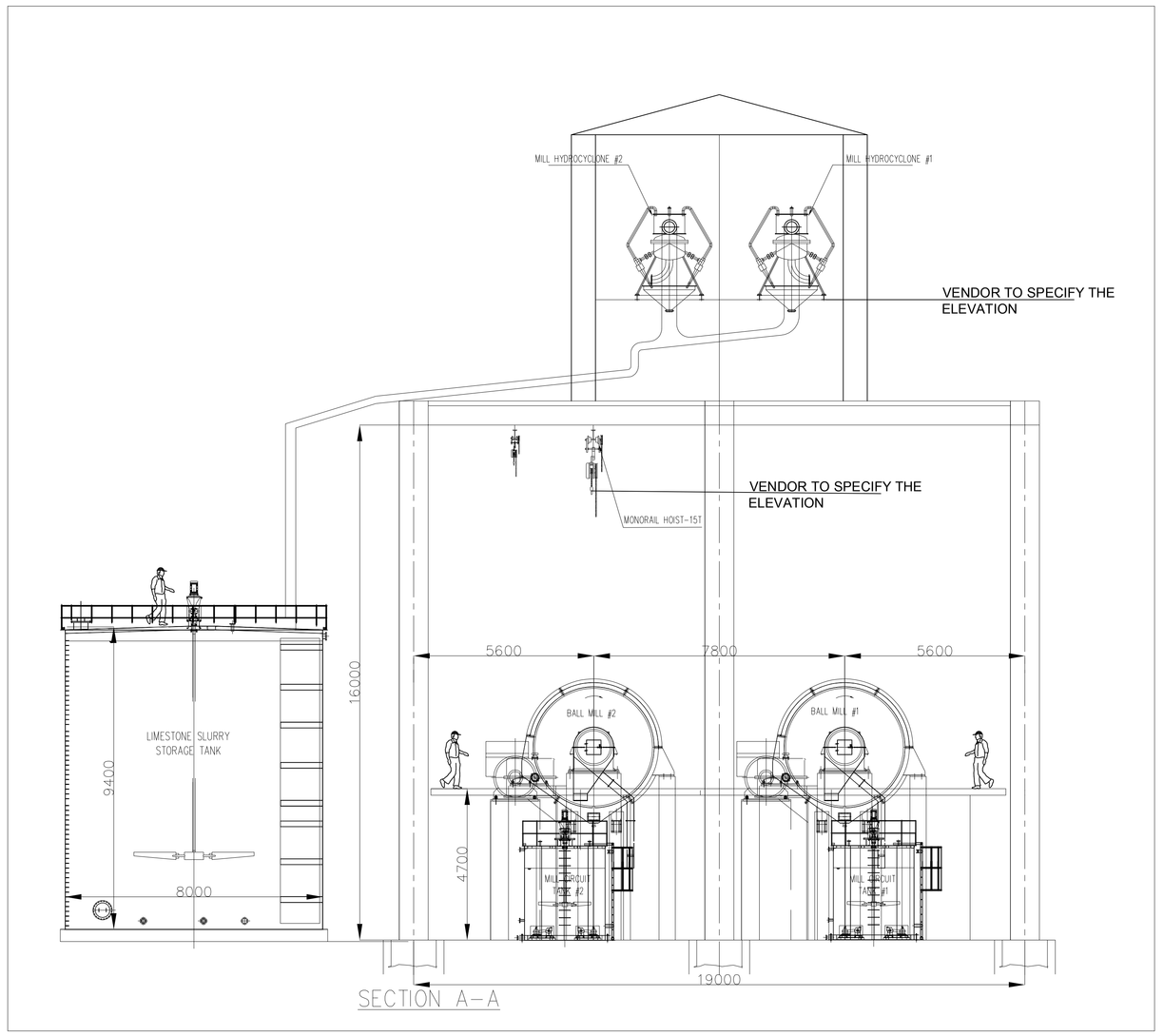

SECTION A–A

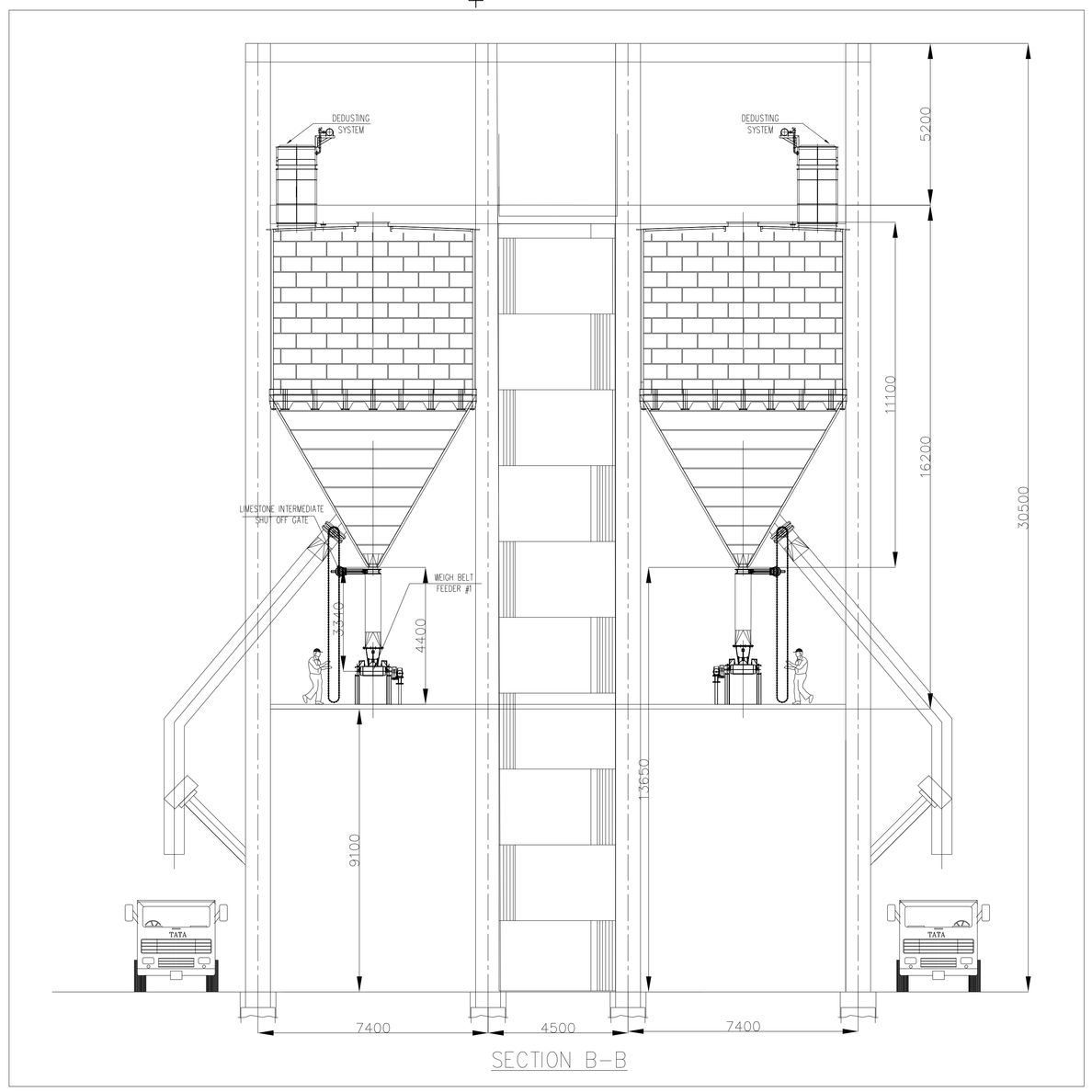

SECTION B–B

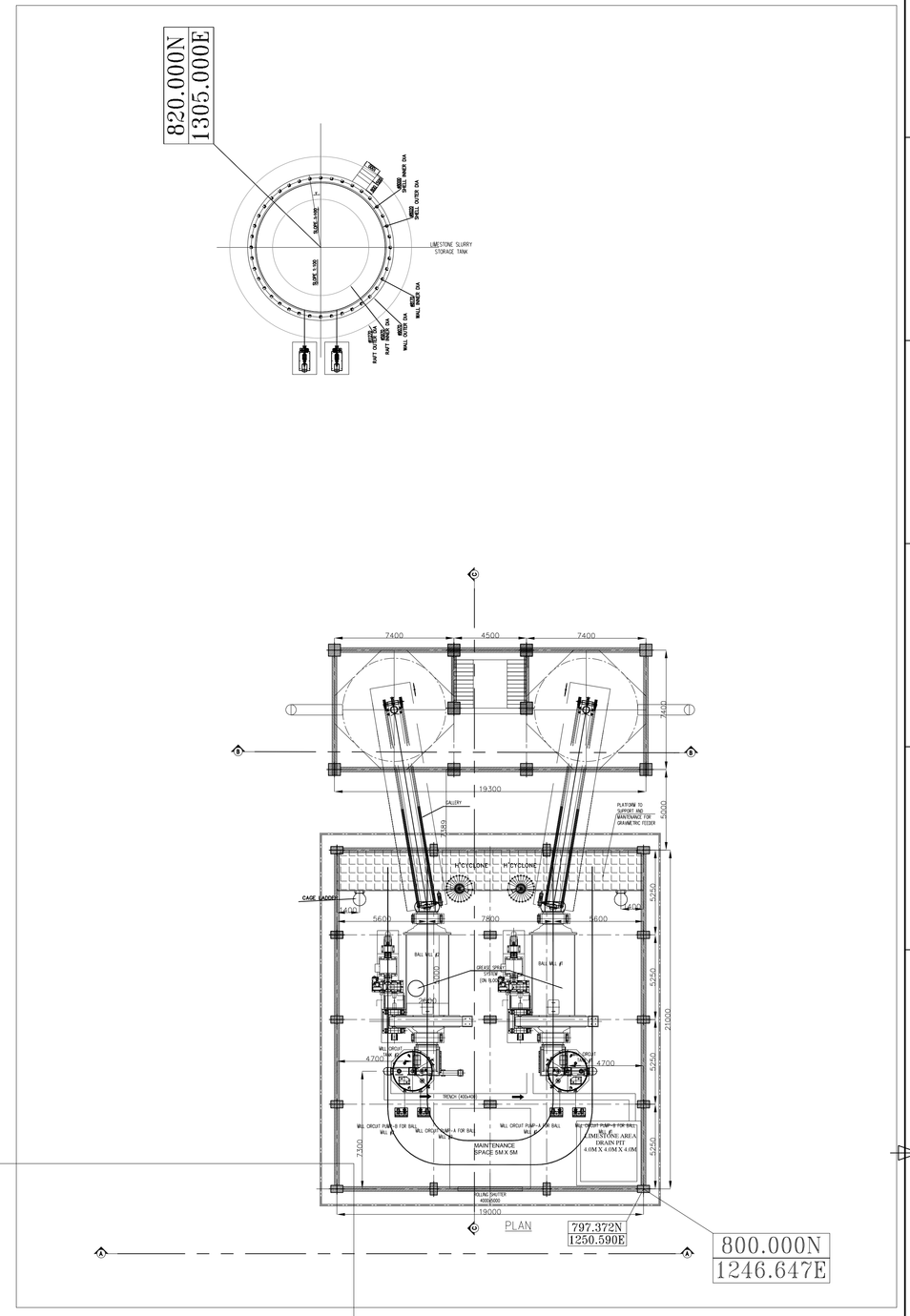

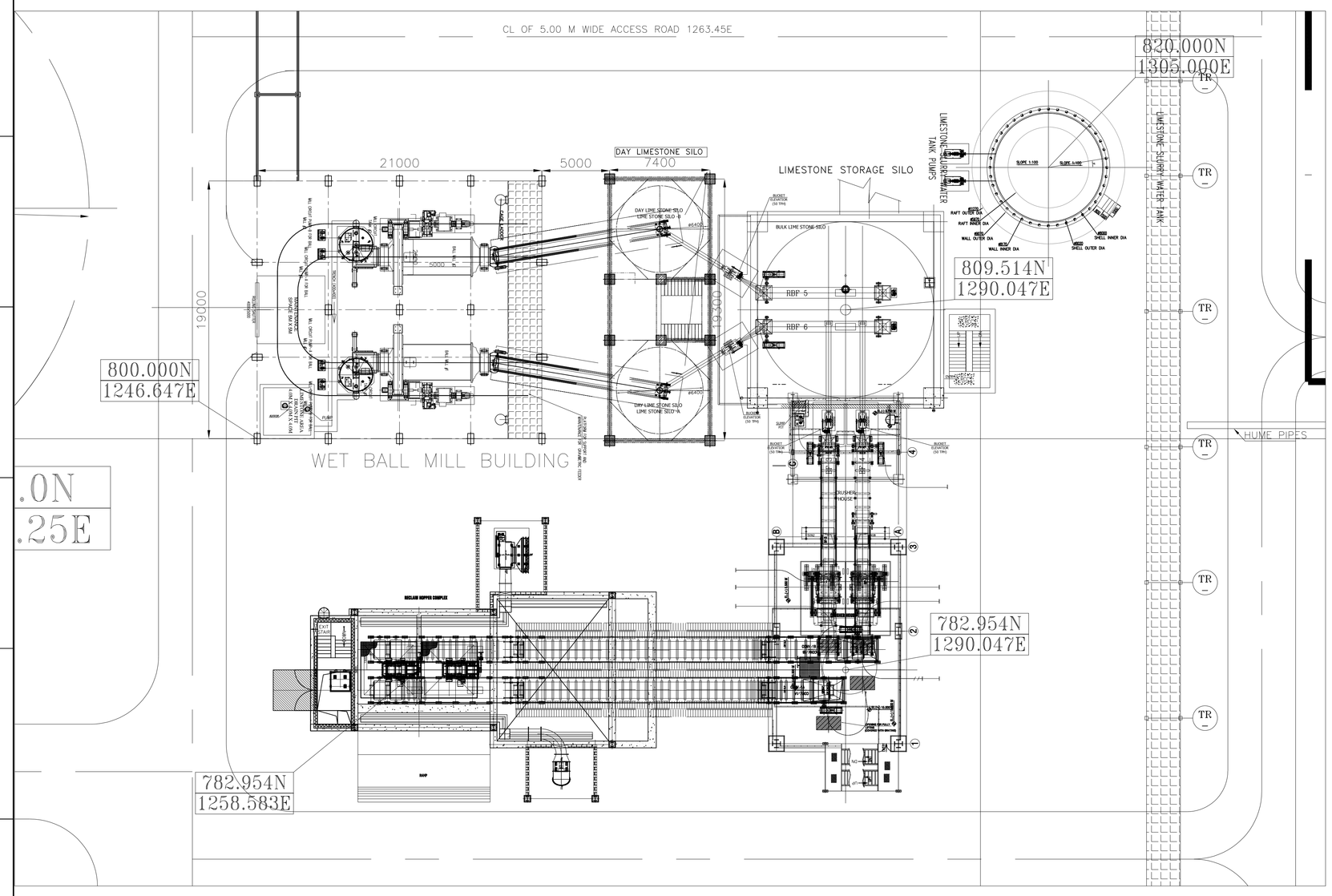

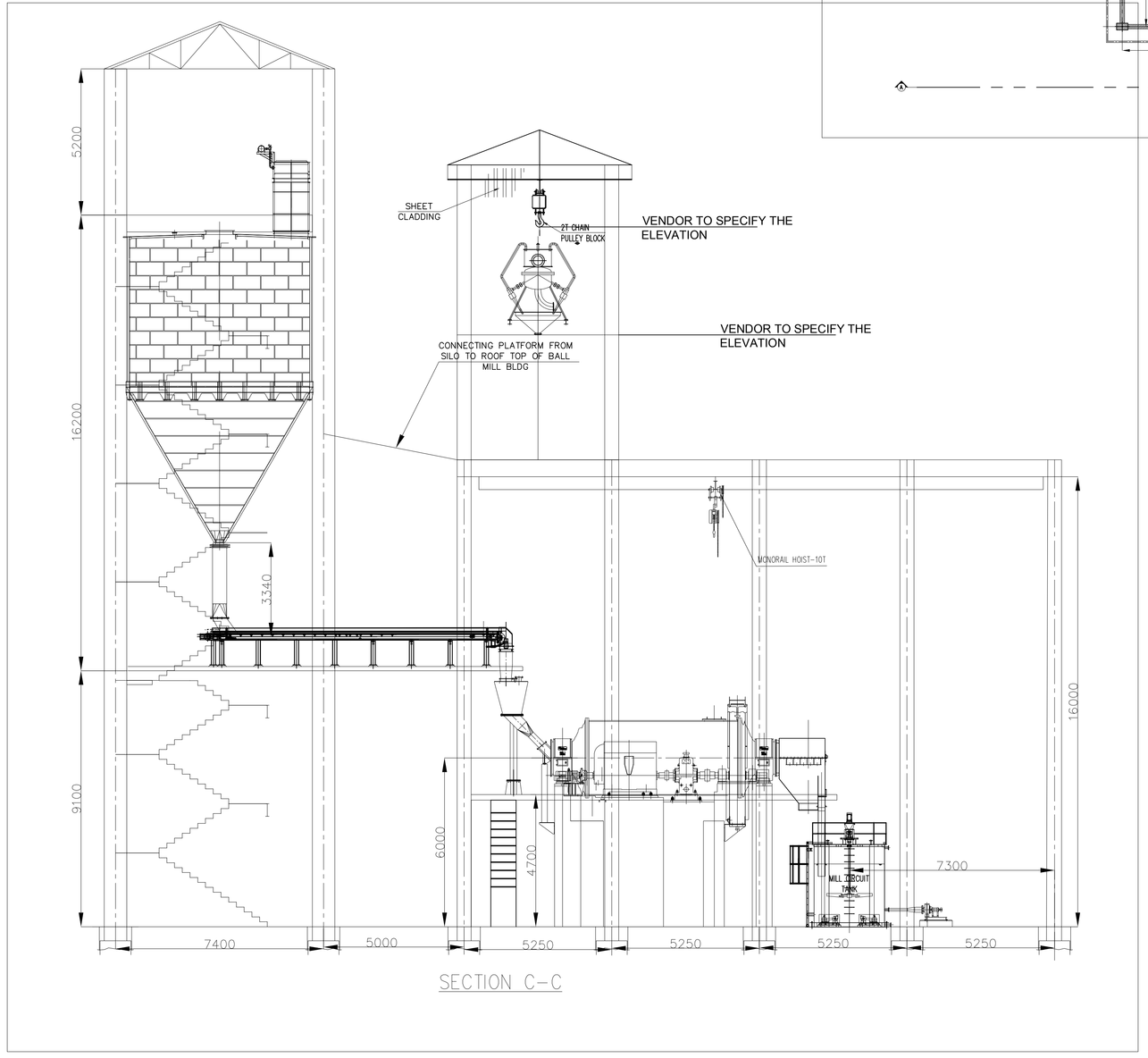

SECTION C–C

NOTES:

1. ALL DIMENSIONS ARE IN MILLIMETRES AND ELEVATIONS IN METRES
2. EL (±)0.00M IS FFL OF POWER HOUSE BUILDING WHICH CORRESPONDS TO RL (+)209.00M
3. FGL IN BALL MILL BUILDING AREA IS RL (+)208.50M
4. THE EQUIPMENT / MACHINERY SIZES SHOWN IN THE DRAWING IS INDICATIVE ONLY AND WILL BE CONFIRMED AFTER VENDOR DATA. THE MAXIMUM ANTICIPATED SIZE AND LOADING IS PROVIDED IN THE DRAWING.
5. FLOOR OPENINGS, PIPE CROSSINGS SHALL BE CONFIRMED DURING DETAIL ENGINEERING.
6. DETAILS OF STAIRCASE, SUITABLE DOORS, WINDOWS AND VENTILATORS SHALL BE CONSIDERED BY CIVIL DESIGNER FOR BALL MILL BUILDING.
7. IT IS TO BE NOTED THAT ONE MONORAIL HOIST WILL BE OPERATED WITH FULL LOAD AT A TIME.

REF. DWGS

1. 0–FW–000–00785 : PLANT LAYOUT OF FGD SYSTEM

CUSTOMER NOS: R4U8

CUSTOMER: MAHARASTRA STATE POWER GENERATION CORPORATION.LTD

PROJECT: BHUSAWAL 1x800MW FGD SYSTEM PACKAGE

BHARAT HEAVY ELECTRICALS LIMITED, UNIT: BOILER AUXILIARIES PLANT, RANIPET-632 406.

DEPT CODE		NAME	SIGN	DATE
M	DRN	MANIKANDAN		19.06.19
	CHD	LOGANATHAN		19.06.19
	APPD	R.S BALAJI		19.06.19

TITLE: LAYOUT AND ELEVATION DETAILS OF BALL MILL BUILDING AND LIMESTONE SLURRY PREPARATION SYSTEM

SCALE : NTS

DRAWING NO. 0–FW–000–00786

REV. 00

Size A0

CAUTION: THIS DRAWING IS THE PROPERTY OF BHARAT HEAVY ELECTRICALS LIMITED. IT MUST NOT BE COPIED OR USED TO WORKS ANY INFORMATION FOR MAKING OF ANY PRODUCT NOT ORDERED BY BHEL.
THIS DRAWING IS APPROVED WITH BHEL FORWARD FOR ASSESSMENT WITH BHEL FORWARD.