BHARAT HEAVY ELECTRICALS LIMITED
HEEP HARIDWAR INDIA-PIN 249403
FAX NO: 0091 1334 226462/223948
PHONE NO: 0091 1334 285451

Enq. No.: BHEL-HEEP/OPEN-TENDER (TG Forgings)/2009 **Date of issue : 07.11.2009**

Sub: BHEL-HEEP/OPEN-TENDER (TG Forgings)/2009

Dear Sir,

The Heavy Electricals Equipment Plant (HEEP) located in Haridwar, India is one of the major manufacturing plants of Bharat Heavy Electricals Ltd. The core business of HEEP includes design and manufacture of large steam and gas turbines, turbo generators and so on. Government of India has a plan to add 70,000 MW in Five Year Plan (2007-2012) and more than 1,20,000 MW in next five year plan (2012-2017).

Sealed tenders with the Tender No. and opening date clearly super scribed on the cover are invited from the manufacturers (registered as well as unregistered) for the supply of the following items:-

The tender documents can be down loaded from our web site www.bhel.com or www.bhelhwr.co.in or www.tenders.gov.in submitted with requisite EMD and tender fee. **Only those vendors who fulfill the Minimum Qualifying Requirements (as per Annexures) will be considered for further technical evaluation.**

This notification shall be published in Indian as well as International News paper. **The last date for taking tender documents shall be 19.12.09 & opening of each tender shall be 21.12.09.** Tenders will be received up to 1.45 P.M. on **21.12.09** and opened on the same day at 2.00 P.M. in the Tender Room**. Please note that tender received after due date & time (1.45PM on 21.12.09) shall not be REPEAT shall not be opened.** BHEL will not be responsible for any type of postal / courier delay.

Intending vendors must remit the tender fee of Rs. 2,000/- for indigenous vendors (equivalent foreign currency $ 50 / € 40 from foreign vendors) against each tender along with the requisite EMD Rs 100000/- (Rupees One Hundred Thousand) per tender in the form of bank draft while submitting the tender documents as detailed in "Instruction to Bidders", after down loading from this web site.

Specifications & Drawing of the above items are available on our above website with links provided for all Specifications, Drawings & Annexure (At the end of this document). Other cross referred documents can either be physically collected from BHEL, Haridwar or can be obtained by email guptark@bhelhwr.co.in against proof of draft of the tender fee in favour of BHEL, Haridwar. This draft is to be submitted along with offer. Amendments/Corrigendum, if any, will be hosted on our web site only. Other terms and conditions will be as per tender documents.

No.	Tender No.	Description of Equipment	Quantity		Total Qty. (Nos.)
			NTPC	Non NTPC	
1	EE203/2009/1409N	Rotor Shaft Forging As per Spec.HW19476–THW210MW Mat.Gr.26NiCrMoV14-5, Weight 43.73 MT	-	1	1
2	EE211/2009/1480N	Rotor Forging As per Spec.HW19476–660/600MW Mat.Gr.26NiCrMoV14-5, Weight 71.08 MT	2	7	9
3	EE211/2009/1997N	Rotor Forging As per Spec. HW19476–500MW Mat.Gr.26NiCrMoV14-5, Weight 63.43 MT	1	-	1
4	EE211/2009/1484N	Forging for Rotor Shaft As per Spec.HW19476–800MW Mat.Gr.26NiCrMoV14-5, Weight 85.15 MT	-	2	2
5	EE211/2009/3847N	Rotor Shaft M/C As per TDC-F-91360101000–500MW Mat.Gr.26NiCrMoV14-5, Weight 49.78 MT	-	2	2
6	EE211/2009/5661N	Forging for Rotor Shaft As per Spec.HW19476–250MW Gr.26NiCrMoV14-5, Weight 41.61 MT	-	1	1

The total quantity, quantity for NTPC/Non NTPC may undergo change at the time of ordering.

The details of each item with required delivery are given in **Annexure-1 (Details of Items)**

Please submit your Techno-Commercial offer only for the above requirement subject to our terms and conditions.

BIDS SHALL BE OPENED OF THOSE VENDORS ONLY WHO SHALL SUBMIT EMD AND TENDER FEE. [PLEASE SUBMIT SEPARATE DRAFTS FOR EMD AND TENDER FEE DRAWN IN FAVOUR OF BHEL, HARIDWAR IN ANOTHER ENVELOPE SUPERSCRIBED WITH BOLD LETTERS "EMD & TENDER FEE". THOSE VENDORS WHO ARE QUOTING FOR MORE THAN ONE TENDER ARE REQUIRED TO SUBMIT TENDER FEE FOR EACH TENDER BUT EMD SHALL BE LIMITED TO Rs. 200000/- (RUPEES TWO HUNDERD THOUSAND ONLY) at 2 PM on the due date in the presence of authorized representative of the bidders who may like to be present. The authorized representative should bring authority letter from their parent company (Manufacturer) for attending the bid opening.

PRE BID CLARIFICATION CONFERENCE SHALL BE HELD ON 05.12.09 AT BHEL, HARIDWAR, INDIA FROM 1000 HRS TO 1700 HRS (IST) IN THE CONFERENCE HALL, FIRST FLOOR, OLD ENGINEERING BUILDING, HEEP, HARIDWAR. SENIOR EXECUTIVES FROM ENGINEERING, QUALITY & PURCHASE SHALL BE AVAILABLE. ALL PARTICIPATING VENDORS ARE REQUESTED TO ATTEND TO SEEK THE CLARIFICATION ON TECHNICAL, QUALITY & COMMERCIAL ISSUES IF THEY SO DESIRE. VENDORS CAN ALSO SEND THEIR QUESTIONS BEFORE IN WRITING. ALL THE QUESTIONS ASKED IN CONFERENCE & IN WRITING BEFORE & AFTER THE CONFERENCE SHALL BE HOSTED ON OUR WEB SITE ALONGWITH THEIR REPLIES.

KINDLY READ "INSTRUCTIONS TO BIDDERS." QUOTATION NOT IN ACCORDANCE WITH THE INSTRUCTIONS ARE LIABLE TO BE DISQUALIFIED AND IGNORED.

INSTRUCTIONS TO BIDDERS FOR OPEN TENDER

DEFINITION

Registered Vendors - Are those who are registered with BHEL, Haridwar for Size/Weight of tendered forgings in respective steel grade.

Un-registered Vendors - Are those who are not registered with BHEL, Haridwar for Size/Weight of tendered forgings in respective steel grade.

Un-registered vendors shall be considered, if and only if, they meet the minimum qualification requirement as given below.

MINIMUM QUALIFICATION REQUIREMENT
(APPLICABLE FOR VENDORS NOT REGISTERED AT BHEL, HARIDWAR)

FORGING FOR TG ROTOR SHAFT FORGING

1. **Following is the mandatory requirement. Offer of Vendors not meeting these requirements will not be considered.**

For Forgings

Sl.no.	Description	Requirement
1	Melting practice	Vacuum degassed steel with low silicon content (e.g. VCD steel) or Electro slag remelted (ESR) steel shall be used.
2	Heat Treatment	Vertical/Horizontal furnace
3	RSM	KWU-Ring-Core method (AA0850150) / ASTM E837
4	Facility for blind axial bore trepanning	Extraction of axial core sample of dia 60mm minimum as per AA0850155
5	NDT of axial bore	MPI of bore As per AA0850106
6	Surface finish of axial bore	As per drawing
7	Concentricity, cylindricity and parallility	As per drawing
8	Magnetic Property Test	Test rod to be taken from tangential sample

Vendors must fill up Annexure – 2 in confirmation to above Minimum Qualifying Requirements.

2. The vendor should have minimum 3 years experience of manufacturing TG rotor shaft forging of same or equivalent steel grade and same or higher weight range.

   OR

   have manufactured & supplied at least three numbers of forgings of same or equivalent steel grade and same or higher weight range till tender opening date.

   - Experience list of shaft forgings manufactured and supplied in last three years. - **Please fill up the enclosed format – Annuxure-3 For Forging**

3. Furnish actual test certificate supplied for forging(s) of same or similar grade in line with point no.2 (must have been manufactured and supplied till tender opening date). Following certificates must be furnished.
   a. Chemical Analysis
   b. Mechanical Analysis
   c. UT
   d. RSM
   e. FATT
   f. Magnetic Property

ESSENTIAL INSTRUCTIONS

1. **Only those bids will be opened which have been submitted with requisite EMD & tender fee. Those vendors who are quoting for more than one tender are required to submit tender fee for each tender but EMD shall be limited to Rs. 200000/- (Rupees two hundred thousand only). In such cases vendor must furnish a draft of EMD in one tender & furnish statement giving details of draft with all tender numbers being quoted in each tender envelop.**
2. **All un-registered vendors shall be approved by BHEL, if found suitable, on the basis of data furnished by them in Supplier Registration Form (SRF) either Annexure-7 for Foreign Vendors or Annexure– 8 for Indigenous Vendors. Vendor (s) shall not be considered for ordering if not approved by BHEL.**
3. **For NTPC projects, order shall be placed on NTPC approved vendors only. Vendors to submit data in NTPC sub-contractor questionnaire enclosed (Annexure-11) along with experience for BHEL/NTPC review.**
4. **BHEL team may visit the vendor (s) works for verification of capability and capacity claimed in tender documents/offer (s).**

5. The tenders shall be submitted in three parts
   i. Part I - Techno -Commercial Bid,
   ii. part II - price Bid &
   iii. part III - Vendor Registration Form

as described below on or before the due date. Vendor Registration Form shall be submitted by unregistered vendors only.

6. **The Quotation should be from the Principal / Original Manufacturer, failing which the quotation is likely to be ignored. In Case the quotation is submitted through agent, the quotation must accompany original authorization letter.**
7. Any corrections / amendments shall be properly & fully authenticated with signature. No overwriting is acceptable.
8. In case of ordering, manufacturing plan should be submitted for BHEL approval.
9. Forging shall be inspected as per quality plan enclosed in this notice by BHEL or its nominated inspection agency.
10. Part-I containing techno-Commercial bid and part-III containing Vendor Registration Form will be opened on the date and time specified in the tender notice in the presence of those tenders who wish to attend.
11. Part-II (Price Bids) along with supplementary price bids, if necessary, will be opened at a later date of only those bidders whose techno-commercial bid has been found acceptable.
12. Suitability of delivery shall be the important criteria for evaluation of techno commercial bid and the bids falling within the delivery period and meeting the last delivery requirement with delay of 4 weeks (Grace Period) shall be considered. Any offers beyond the grace period may be rejected. All offers which do not conform to the last required delivery date but are within the grace period shall be loaded per week as per late delivery clause "g" of Price Bid (Part II).
13. Currency exchange rate will be applicable on the date of opening of Part-II (Price Bid) for evaluation purpose.
14. **Depending upon the delivery suitability, BHEL reserves the right to split order on more than one vendor.**
15. **Evaluation of Bid: - The bid shall be evaluated**
    a. **Cost to BHEL basis. (Basic Cost + Insurance + Transportation + Duty)**
    b. **The loading, if any, on account of LD penalty, payment terms or any other cost determined at later stage, which shall be communicated to the vendor.**
    c. **Upper cap in case of PVC formula .**
16. Tenders when finalized shall be in the name of the bidder only and change of name during tender evaluation (without certificate from registrar of company) and after submission of the tender is liable to make the offer ineligible for participation.
17. All test certificates / Guarantee certificates to be submitted in TRIPLICATE along with dispatch documents.
18. BHEL reserves the right to open the price bid (part-II) along with the opening of techno-commercial offer at its option and in that case vendor will be informed accordingly.
19. **BHEL reserves the right to go for reverse auction. Vendors are requested to give their best price. In case of failure of reverse auction the paper bid shall be processed. Bidder**

should clearly indicate their acceptance for reverse auctioning in Annexure-4. The bids of those vendors who do not agree for reverse auction may not be considered. The Terms & Condition for Reverse Auctioning is given below.

20. Total weight -- /Gross / Net in Kg. & also package size essentially should be indicated if not exact then approximate.
21. BHEL will evaluate the technical bids against essential criteria/requirements. BHEL may seek clarifications, if required, from the qualified bidders only. These clarifications will be communicated to the eligible vendors and they will be asked to attend techno-commercial discussions on specified dates. The bidders will be given 15 days notice to come prepared with the required documents/ clarifications. No extension will be given. **The offers of those bidders, who are unable to respond in this time frame, are likely to be ignored.**
22. RISK PURCHASE

    In case of delays in supplies/defective supplies or non-fulfillment of any other terms & conditions given in the purchase order, the purchaser may cancel the purchase order in full or part thereof and may also make the purchase of such material from else where/alternative Source at the risk and cost of the supplier.
23. SETTLEMENT OF DISPUTES

- Indigenous Vendors: In all cases of dispute the matter shall be referred for arbitration to any arbitrator to be appointed by the Executive Director or any officer who is the administrative head of Bharat Heavy Electricals Ltd., at Haridwar. The venue of arbitration shall invariably be Ranipur Haridwar. The award of the arbitrator shall be final and binding on both the parties. The arbitrator shall have the power to extend, from time to time, the time for making his award with the consent of the parties.
- Foreign Vendors: In the event of any dispute or difference arising between the parties to this contract regarding execution of same or their respective rights and liabilities there under, the same shall except as otherwise expressly provided therein, be referred to the arbitration of the two arbitrators, one to be appointed by each party; or in the case of the said arbitrators not agreeing then an umpire to be appointed by the two arbitrators in writing before entering on that reference and provisions of the Indian Arbitration Act ,1940 or any statutory notification, or re-enactment therefore and rules framed there under from time to time shall apply to such arbitration . If the two arbitrators do not agree on the appointment of umpire, the nomination of the umpire shall be done by the International Chamber of Commerce, Paris(France).The decision of arbitrators, or in case of their not agreeing, that of the said umpire shall be binding both on seller and purchaser. The venue of the arbitration invariably be New Delhi.

24. JURISDICTION

All question, dispute or differences arising under, out of or in connection with the purchase order shall be subject to the exclusive jurisdiction of Haridwar courts.

25. OVER RIDING CLAUSE

All stipulations made in any correspondence other than those exchanged in regards to "instruction" in our tender documents / enquiry for submission of your offer, if at all shall be void to the extent they are repugnant to the conditions contained herein above and in the purchase order.

26. FINALITY OF MANAGEMENT DECISION

At all places in the preceding clauses BHEL Management's decision shall be final.

IN CASE YOU ARE NOT MAKING AN OFFER AGAINST THIS ENQUIRY, THEN PLEASE ARRANGE TO SEND A LETTER OF REGRET IF YOU HAVE COLLECTED THE TENDER DOCUMENTS FROM BHEL.

DETAILS OF COMPOSITION OF PART-I (TECHNO-COMMERCIAL BID), PART-II (PRICE BID) & PART-III (VENDOR REGISTRATION FORM)

PART-I (TECHNO-COMMERCIAL BID) shall comprise of following documents:

a. Confirmation to Minimum Qualification Requirement as per Annexure-2 (For unregistered vendors only)
b. Annexure-3– Experience List for Forging, (For unregistered vendors only)
c. Complete technical offer as per specification, drawings, technical requirement along with un-priced bid giving FOB, C&F rate and Lloyds inspection charges separately and delivery schedule.
d. Validity of offer to be indicated.
e. **Annexure - 4** - Compliance sheet for technical/commercial terms and conditions for two part tender.
f. Deviation with reference to specification/drawing, if any, should be clearly indicated on a separate sheet.
g. Details of activity outsourced.
h. Copy of enclosed Quality Plans –

Annexure – 5 :

QP should be submitted as accepted along with offer.

i. Please also furnish company profile as per Annexure-6 (MTE-FS-0006) for Forging Manufacturers. These formats are mandatory for unregistered vendors only.
j. Any additional documents (Please specify).

PART –II (Price Bid)

a. Price bid with prices to be submitted as part-II of the tender.
b. Prices should remain firm till the execution of the order. However, in case vendor prefers to maintain their own PVC formula, they can do so. Vendors must give upper & lower cap. This is **must** for evaluation purpose. **Upper price limit** will be considered for evaluation purpose.
c. In case of foreign vendors, prices to be quoted on FOB & C&F Mumbai (India) basis separately. In case of FOB, Loading port must be mentioned. Please note that **Ex-Works** price are **not** acceptable & offer shall not be considered. In case of Indigenous vendor, prices must be quoted on FOR- Destination- CPS-HEEP-BHEL basis.
d. Insurance – Marine in case of foreign vendor & inland in case of Indigenous vendor shall be taken care by BHEL.
e. Third party inspection (LRS) charges to be quoted separately.
f. **Prices are to be written in both Figures & Words. In case of any difference between the two, the figure written in words shall be considered for evaluation. No over writing in this is acceptable.**
g. LD Penalty shall be applicable at the rate of ½ % (half percent) per week or part thereof subject to a maximum of 10% of the value of unexecuted portion of the order. Incase of any variation in LD penalty, your prices shall be loaded to the extent LD penalty not accepted by you.
h. Payment term shall be "100% payment against dispatch documents, through irrevocable LC or Cash against Documents (for foreign vendors) and through bank (for indigenous vendors)" and bank charges shall be either side. **BHEL as a rule do not agree to release advance payment. However, if any vendor insists for Advance Payment, BHEL may consider releasing it on the following conditions. However, releasing advance payment shall be on the sole discretion of BHEL Management and mere fulfilling the conditions as laid down can not be binding on BHEL to release advance payment.**
   - **The advance payment shall be released against Bank Guarantee (BG) of equal amount.**
   - **The BG has to be furnished in format provided by BHEL (Annexure-9) & essentially to be given by the any of one of the consortium banks of BHEL (Annexure-10). In case of foreign bank issuing the BG, it has to be confirmed by any one consortium bank of BHEL.**
   - **The BG has to be valid upto two months after the scheduled delivery.**

- **Vendor is required to pay interest at the prevailing rate of interest notified by our bank from time to time on the amount advanced. Present rate of interest is 13.75 % per annum. Without interest, advance payment can not be released.**
- **Difference, if any, in cost in payment terms with respect to BHEL Payment terms ("100% payment against dispatch documents, through irrevocable LC (for foreign vendors) and through bank (for indigenous vendors)" <u>shall be loaded</u> in prices of vendor.**

i. Irrevocable LC is opened for one quarter (3 months) & is established 45 days prior to delivery schedule. The charges of establishing the LC are on either side i.e. charges in India to be borne by BHEL and charges outside of India to be borne by vendor. If any vendor insists for LC for more than one quarter, vendor has to essentially bear all charges (Within & Out side India) for the period exceeding one quarter.

j. **BHEL does not open confirmed LC even if vendor agrees to bear the confirmation charges.**

<u>Part-III - Vendor Registration Form (SRF)</u>
(Annexure -7 for Foreign Vendors or Annexure– 8 for Indigenous Vendors)

a. The SRF (Annexure 7 or Annexure 8) duly filled up will be assessed for manufacturing capability quality systems being followed, organizational soundness and financial worthiness. The same shall be submitted with Part-I (Techno-Commercial Bid) by un-registered vendor only with BHEL, HEEP, Haridwar.

MARKING OF ENVELOPE:

- Each envelop is to be super scribed as "TENDER FOR (ITEM NAME) AGAINST TENDER NO.---------- DUE ON ----------

- Drafts for Tender Fee & EMD to be kept in one envelop – Envelop –A. On the Top of the envelop, please write Draft No., Issuing Bank Details & Amount. Those vendors who are quoting for more than one tender must submit a statement in the envelops of all those tenders giving details of all the tenders being quoted. However, the draft of each tender should be kept in individual tender envelop.
- Techno-Commercial - Part-I to be kept in another envelop – Envelop-B & to be marked as Techno-Commercial Offer.
- Vendor Registration Form - Part –III to be kept in another envelop – Envelop – C & to be marked as Vendor Registration Form.
- Price Bid – Part-II to be kept in another envelop – Envelop-D & to be marked as Price Bid.
- Envelop-A, Envelop-B, Envelop-C & Envelop-D are to be kept in one envelop super scribed as above

Envelopes not marked as above are liable to be ignored and will not be opened.

TERMS AND CONDITIONS OF REVERSE AUCTIONING

Against this enquiry for the subject item /system with detailed scope of supply as per enquiry specifications, BHEL may resort to "REVERSE AUCTION PROCEDURE" i.e., ON LINE BIDDING ON INTERNET.

- For the proposed reverse auction, technically and commercially acceptable bidders only shall be eligible to participate.
- BHEL will engage the services of a service provider who will provide all necessary training and assistance before commencement of on line bidding on internet.
- BHEL will inform the vendor in writing in case of reverse auction, the details of Service Provider to enable them to contact & get trained.
- Business rules like event date, time, start price, bid decrement, extensions etc. also will be communicated through service provider for compliance.
- Vendors have to fax the Compliance form in the prescribed format (provided by Service provider) before start of Reverse auction. Without this, the vendor will not be eligible to participate in the event.
- BHEL will provide the calculation sheet (e.g., EXCEL sheet) which will help to arrive at "Total Cost to BHEL" like Packing & forwarding charges, Taxes and Duties, Freight charges, Insurance, Service Tax for Services and loading factors (for non-compliance to BHEL standard Commercial terms & conditions) for each of the vendor to enable them to fill-in the price and keep it ready for keying in during the Auction.
- Reverse auction will be conducted on scheduled date & time.
- At the end of Reverse Auction event, the lowest bidder value will be known on the network.
- The lowest bidder has to Fax the duly signed Filled-in prescribed format as provided on case-to-case basis to BHEL through Service provider within 24 hours of Auction without fail.
- Any variation between the on-line bid value and the signed document will be considered as sabotaging the tender process and will invite disqualification of vendor to conduct business with BHEL as per prevailing procedure.
- In case BHEL decides not to go for Reverse Auction procedure for this tender enquiry, the Price bids and price impacts, if any, already submitted and available with BHEL shall be opened as per BHEL's standard practice.

ANNEXURE-1

SL .No.	TENDER NO.	MATERIAL CODE	DRG NO.	DESCRIPTION	QTY.	DELIVERY
1.	EE203/2009/1409N (THW-210 MW TG)	W95413600453	11360100032 REV(03)	ROTOR SHAFT FORGING SPEC:HW19476 REV(04)	1 NO	30/04/2012
2.	EE211/2009/1480N (600/660 MW TG)	W95413600844	11360100051 REV(02)	ROTOR FORGING SPEC:HW19476 REV(04)	9 NOS	31/07/2011 31/08/2011 30/09/2011 30/09/2011 31/10/2011 30/11/2011 31/12/2011 31/07/2012 31/08/2012
3.	EE211/2009/1997N (500 MW TG)	W95413600038	11360100001 REV(12)	ROTOR FORGING SPEC:HW19476 REV(04)	1 NO	31/07/2012
4.	EE211/2009/1484N (800 MW TG)	W95413600933	11360100053 REV(00)	FORGING FOR ROTOR SHAFT SPEC:HW19476 REV(04)	2 NOS	30/04/2012 30/06/2012
5.	EE211/2009/3847N (500 MW TG M/C)	W95413600674	91360101000 REV(24)	ROTOR SHAFT M/C AS PER TDC-F-91360101000	2 NOS	30/06/2011 30/06/2011
6.	EE211/2009/5661N (250 MW TG)	W95413600720	21360100046 Rev. 01	FORGING FOR ROTOR SHAFT SPEC:HW19476 REV(04)	1	30/11/2010

NOTE: THE QUANTITY INDICATED ABOVE CAN BE INCREASED/DECREASED.

ANNEXURE 2

MINIMUM QUALIFICATION REQUIREMENT FOR FORGING

Sl. No.	Description	Requirement
01	Melting practice	Vacuum degassed steel with low silicon content (e.g. VCD steel) or Electro slag re-melted (ESR) steel shall be used.
02	Heat Treatment	Vertical / horizontal furnace
03	RSM	KWU-Ring-Core method (AA0850150) / ASTM E837
04	Facility for blind axial bore Trepanning	Extraction of axial core sample of dia 60mm minimum as per AA0850155
05	NDT of axial bore	MPI of bore As per AA0850106
06	Surface finish of axial bore	As per drawing
07	Concentricity, Cylindricity and Parallility	As per drawing
08	Magnetic Property Test	Test rod to be taken from tangential sample

We confirm that we meet the minimum qualification requirements as stated above.
We also confirm that all facilities are available in house.

Signature with stamp
Name:
Name of Firm:
Designation:
Date:

EXPERIENCE LIST FOR FORGINGS – ANNEXURE 3

SL. NO.	DESCRIPTION	MATERIAL GRADE	WEIGHT	DIMENSION (MAX BARREL DIA X LENGTH)	MW RATING	CUSTOMER	YEAR of SUPPLY

ANNEXURE-4

COMPLIANCE SHEET FOR TECHNICAL/COMMERCIAL TERMS AND CONDITIONS FOR TWO PART TENDER

PLEASE FILL THIS ANNEXURE & ATTACH WITH YOUR TECHNO-COMMERCIAL BID.

Offer must be sent in two separate sealed envelopes containing techno-commercial offer in one envelope marked "TECHNO-COMMERCIAL BID" and prices in second envelope marked "PRICE-BID". Both the envelopes must be contained in the main envelope. Tender name and due date to be marked on all the envelopes.

You are requested to kindly confirm /clarify the following:-

S.No.	Description	Vendor's Confirmation
1.	Vendor to confirm that they meet each & every clause of our specifications/Drawings.	YES / NO
2.	If "No" to serial number 1, vendor to specify each deviated clause & submit in a separate sheet.	
3.	Vendor to list out on a separate sheet any activity which is outsourced. Please furnish details of out sourced vendor.	
4.	Validity: confirm that validity of the offer shall be 90 days from the date of tender opening	YES / NO
5.	Confirm that un-priced part of price bid is enclosed with technical commercial offer	YES / NO
6.	Confirm that prices have been quoted on FOB as well as C & F basis (For Foreign vendors)	YES / NO
7.	Confirm that Loading Port has been mentioned.	YES / NO
8.	Confirm that prices have been quoted on FOR as well Ex-works basis. (For Indigeneous vendor)	YES / NO
9.	Confirm that prices shall be firm and fixed throughout delivery period.	YES / NO
10.	Confirm that payment term shall be "100% payment against dispatch documents, through irrevocable LC (for foreign vendors) and through bank (for indigenous vendors)" and bank charges shall be either side.	YES / NO
11.	LD Penalty shall be applicable at the rate of ½ % (half percent) per week or part thereof subject to a maximum of 10% of the value of unexecuted portion of the order. Incase of any variation in LD penalty, your prices shall be loaded to the extend LD penalty not accepted by you.	YES / NO
12.	Confirm that all test certificates / Guarantee certificates to be submitted as per BHEL specification. in TRIPLICATE along with despatch documents	YES / NO
13.	Confirm that Accepted Quality plan has been submitted along with offer.	YES / NO
14.	Right of acceptance – BHEL reserves the right to reject any or all quotations without assigning any reasons thereof. BHEL also reserves the right to increase or decrease the tendered quantities. Vendors should be prepared to accept order for reduced quantities without any extra charges. Vendor should also be prepared for giving discount in case of increase in quantity.	YES / NO
15.	Confirm specifically that material shall be supplied as per tender documents.	YES / NO
16.	Ink signed order acceptance shall be furnished within 15 days of order placement.	YES / NO
17.	Confirm if there is Indian agency commission.	YES / NO

18.	Please quote material cost and third party inspection (Lloyds) charges separately. BHEL may place the order with / without third party inspection charges. The comparative shall be prepared on material cost only without taking into account third party inspection charges.	
19.	Please confirm your acceptance for Reverse Auctioning of these items.	YES / NO
20.	Bank Guarantee to be submitted on the prescribed format through BHEL consortium Bank & shall have to be submitted before release of payment. The format & List of BHEL consortium Bank is available at our website www.bhel.com or www.bhelhwr.co.in.	
21.	Confirm to send original ink signed copy of offer, if offer has been sent through email or FAX or photocopy has been submitted.	YES / NO
22.	Confirm acceptance of risk purchase clause.	YES / NO

QUALITY PLAN

BHEL							
	QP NO.	SQP/ TGS	REV.	0	DESCRIPTION	LEGENDS	
	SPEC. NO.	HW19476	REV.	AS PER PO	TG SHAFT	P- PERFORMED BY	1- LLOYDS
	DRG. NO.	AS PER PO	REV.	AS PER PO		W- WITNESSED BY	2- VENDOR
						V- VERIFIED BY	3- SUBVENDOR

SL. NO.	COMPONENT OPERATION	CHARACTERISTICS	CLASSIFI-CATION	TYPE OF CHECK	QUANTUM	REFERENCE DOCUMENT	ACCEPTANCE NORMS	FORMAT OF RECORDS	AGENCY			REMARKS
									P	W	V	
1.	MELTING	CHEMICAL COMPOSITION	CRITICAL	CHEMICAL	100%	VENDOR'S STD.	HW19476	TC	2	-	1	
2.	FORGING	FORGING STEPS	MAJOR	VISUAL	100%	-DO-	VENDOR'S STD	TC	2	-	1	
3.	PRELIMINARY HEAT TREATMENT	TIME TEMP CONTROL	MAJOR	MEASURE	100%	-DO-	-DO-	IR	2	-	1	
4.	MARKING OF CLOCKING SYMBOLS		MAJOR		100%		HW19476		2	1	-	
5.	MACHINING FOR QUALITY HT	DIMENSIONS	MAJOR	MEASURE	100%	DRAWING	DRAWING	IR	2	-	-	
6.	INTERNAL UT	ULTRASONIC TEST	MAJOR	UT	100%	HW19476	HW19476	IR	2	-	-	
7.	QUALITY HEAT TREATMENT	TIME TEMP CONTROL	MAJOR	MEASURE	100%	HW19476	HW19476 APPROVED HT PROCEDURE	TC	2	-	1	
8.	UT	ULTRASONIC TEST	MAJOR	UT	100%	HW19476	HW19476 PA 14/24.51	TC	2	1	-	
9.	RESIDUAL STRESS MEASUREMENT	RESIDUAL STRESS TESTING	MAJOR	RST	100%	HW19476	HW19476	TC	2	1		
10.	SAMPLING FOR MECHANICAL TESTING		MAJOR		T1 & T2	BHEL DRWING & SPEC	BHEL DRWING & SPEC		2	1	-	
11.	MECHANICAL TESTING & METALLOGRAPHY	TENSILE / IMPACT TEST HARDNESS MICROSTRUCTURE	MAJOR	MECHANICAL METALOGRAPH	100% T1 & T2	HW19476	HW19476	TC	2	1	-	HARDNESS & MICROSTRUCURE FOR INF.
12.	TREPANNING OF AXIAL CORE		MAJOR			BHEL DRWING & SPEC	BHEL DRWING & SPEC		2	-	-	
13.	AXIAL MECHANICAL TEST	TENSILE TEST IMPACT TEST / FATT	MAJOR	MECHANICAL	100%	HW19476	HW19476	TC	2	1	-	
14.	FINISH MACHINING	DIMENSIONS	MAJOR	MEASURE	100%	DRAWING	DRAWING	TC	2	1	-	
15.	MAGNETIC TEST	MAGNETIC PROPERTIES	MAJOR	MAGNETIC TEST	100%	HW19476	HW19476	TC	2	1	-	
16.	BOROSCOPIC & MPI OF AXIAL BORE	BOROSCOPIC & MAGNETIC PARTICLE TEST	MAJOR	BOROSCOPIC & MPI	100%	HW19476	HW19476	TC	2	1	-	
17.	PLUGGING OF AXIAL BORE					BHEL DRWING & SPEC	BHEL DRWING & SPEC		2	-	-	
18.	MARKING PRESERVATION & PACKING	MARKING PRESERVATION & PACKING	MAJOR	VISUAL	100%	BHEL DRWING & SPEC	BHEL DRWING & SPEC		2	-	1	

NOTE: TCS ARE REQUIRED IN 3 NO. HARD COPIES AND THREE NO. CD-ROMs

N. K. MANWANI DGM (QA)

ANNEXURE-6 -MTE- FS-0006

Company profile for Forgings Supplier

1.0 Scope of Application

The suppliers are required to furnish following information. It serves as an overview about the supplier's manufacturing practices.

2.0 Company Profile

Supplier's Name : _____

Address	
Company Owner	
Contact Person: Tel No. Email: Contact Person for Quality Assurance: Tel No. Email:	Product Range:

I. General Data

Production per year in MT • % share for power utilities	
Turn over (financial) • % share for power utilities	
Number of employees • Technical • Others	
Remarks	

II. Equipment

a. Steel making

Own melting shop	Yes/No
Separate melting shop in group of the company	Yes/No
Buying ingots from outside	Yes/No
If yes, supplier for ingots	
Size of electro furnaces	

1. Ladle(s) refining (MT)	
Maximum ingot size - diameter [mm] - length [mm] - weight [MT]	
2. Size of ESR- facilities max weight [MT]	
Maximum ESR-ingot size - diameter [mm] - length [mm] - weight [MT]	
Remarks:	

b. Forging Process

Press capacity in MT	
Max. forging weight in MT	
Remarks :	

c. Heat Treatment Facilities

Dimensions of horizontal furnaces • Length X width X height [m m] • Max. temperature in °C • Max. weight of forging (MT)	
Dimensions of vertical furnace • Diameter : • Height : Max. temperature in °C Max weight of forging (MT)	
Quenching medium • Water / oil / Air	
Quenching type • Immersion/ spraying	
Maximum weights of forgings in MT/ Dimensions of quenching facilities in [m]: Oil tank Water tank Spraying equipment	Vertical horizontal Weight of forg. : Length of tank : Diameter of tank: Weight of forg.: Length of tank: Diameter of tank: Weight of forg. : Length of equip.: Diameter of equip.:
remarks :	

d. Machining Facilities:

Horizontal center lathes	Number : Max. Weight : Max. Length : Max. Diameter :
Trepanning machine for extraction of axial core	Yes / No
Trepanning of radial cores	Yes / No
Trepanning of tangential cores	Yes / No
Removal of tangential / outside test pieces	Segment Ring Core
Remarks	

e. Testing Equipment (Details to be mentioned)

- **Testing Equipment for Analysis and Technologies Properties**

Chemical analysis	
Tensile testing facilities Temperature range	
Impact energy testing facilities Temperature range	
Hardness testing facilities	
Creep rupture testing facilities	
Metallographic examinations	
Equipment for testing of magnetic properties	
Remarks :	

- **NDT**

UT-inspection	
Bore Inspection Facilities Boroscopic MPI Surface finish	
Number of inspectors with • level 2 • level 3 (as per ASNT)	
Remarks :	

- Heat Stability Testing Facilities

Max. Diameter of forging Max. Length of forging Max. Weight of forging	

- **Residual Stress Measurement :**

Applied method	

III. Maximum Delivery Dimensions and Weigths

IP-rotors: • Max dia. • Max length • Max weight	
LP-rotors: • Max dia. • Max length • Max weight	
Generator -shafts: • Max dia. • Max length • Max weight	

IV. Certifications

ISO 9000	
Additional qualifications	
Remarks	

Date: _____

Signature with seal : _____

BHARAT HEAVY ELECTRICALS LIMITED, INDIA

GUIDELINES TO FOREIGN SUPPLIERS FOR FILLING UP

SUPPLIER REGISTRATION FORM

01. Registration Form no. VRG AA01 may be obtained from Source Development Cell of the respective BHEL Unit or downloaded from BHEL website www.bhel.com.

02. Any clarification with respect to procedure for registration may be obtained from the Source Development Cell of respective BHEL unit.

03. All sheets of above form are to be filled up and signed by the authorized signatory.

04. Please attach separate sheet if the space provided is insufficient. For any other information also, separate sheet may be attached.

05. Any information/clarification required by BHEL during processing of registration must be given expeditiously.

06. Please ensure that all required enclosures are attached with the filled up Supplier Registration Form and list of enclosures is given as required.

07. Please fill up the check-list given on next page and send along with the Supplier Registration Form to BHEL.

You are visiting a PDF on www.bhel.com

BHARAT HEAVY ELECTRICALS LIMITED, INDIA

CHECK-LIST FOR FOREIGN SUPPLIERS REGISTRATION FORM

Sl. No	Check-Point	Yes/No
1.0	Information against all points in the Supplier Registration Form has been given.	
2.0	Authorization letter has been enclosed (in case of Indian agent)	
3.0	Banker's certificate has been enclosed	
4.0	Are you an ISO:9001-2000 accredited supplier?	
4.1	If yes, have you enclosed copy of ISO:9001-2000 accreditation certificate & "Table of Contents" of your Quality Manual?	
4.2	If no, have you enclosed written down procedure / manual of Quality Management System?	
5.0	Have you enclosed experience list (as per Sl.4.0 of the form VRG AA01)	
6.0	List of enclosures has been furnished (as per Sl.6.0 of the form VRG AA01)	
7.0	All the pages of the form & enclosures have been signed by Authorized Signatory.	

You are visiting a PDF on www.bhel.com

BHARAT HEAVY ELECTRICALS LIMITED, INDIA

FORM NO. VRGAA01 (FOREIGN SUPPLIER)

ALL COLUMNS SHOULD BE PROPERLY FILLED IN THE SPACE PROVIDED FOR. WHEREVER IT IS NOT APPLICABLE PLEASE WRITE "NOT APPLICABLE". INCOMPLETE OR INCORRECT FORMS MAY NOT BE CONSIDERED. PLEASE ATTACH SEPARATE SHEETS, IF SPACE AVAILABLE IS INADEQUATE.

SUPPLIER REGISTRATION FORM

	FOR BHEL USE
1.0 **GENERAL INFORMATION:** 1.1 NAME OF COMPANY : 1.2 DETAILS OF HEAD OFFICE : ADDRESS : TELEPHONE : FAX : E-MAIL : WEB SITE : 1.3 DETAILS OF FACTORY / WORKS : ADDRESS : TELEPHONE : FAX : E-MAIL : 1.4 DETAILS OF MARKETING AGENT (OUT SIDE INDIA , IF ANY) ADDRESS : TELEPHONE : FAX : E-MAIL : 1.5 DETAILS OF INDIAN AGENT, IF ANY (**ATTACH AUTHORIZATION LETTER**) ADDRESS : TELEPHONE : FAX : E-MAIL : 1.6 CHIEF EXECUTIVE :	
SUPPLIER'S AUTHORISED SIGNATORY	**BHEL CERTIFIED ASSESSOR**

You are visiting a PDF on www.bhel.com

BHARAT HEAVY ELECTRICALS LIMITED, INDIA

SUPPLIER REGISTRATION FORM

1.7 CONTACT PERSON(S) FOR PRODUCT OFFERED: NAME(S) : OFFICIAL CAPACITY : ADDRESS : TELEPHONE : FAX : E-MAIL : 1.8 YEAR OF ESTABLISHMENT : 1.9 PRODUCTION CAPACITY PER ANNUM : 1.10 PARTICULARS OF PRODUCT INCLUDING SPECIFICATION AND RANGE OFFERED FOR REGISTRATION: (**ATTACH BROCHURES AND CATALOGUES**) 1.11 NAME(S) OF BANKERS : 1.12 BANKER'S CERTIFICATE AS TO CREDITWORTHINESS OF THE CLIENT (ENCLOSE CERTIFICATE) : 1.13 PORT OF LOADING : 1.14 NEAREST AIRPORT : 1.15 D&B D-U-N-S NUMBER : (DUN & BRADSTREET NINE DIGIT IDENTIFICATION NUMBER, NOT MANDATORY) 1.16 ANY OTHER INFORMATION :	FOR BHEL USE
SUPPLIER'S AUTHORISED SIGNATORY	**BHEL CERTIFIED ASSESSOR**

You are visiting a PDF on www.bhel.com

BHARAT HEAVY ELECTRICALS LIMITED, INDIA

SUPPLIER REGISTRATION FORM

FOR BHEL USE

2.0. **FINANCIAL INFORMATION:**

ANNUAL TURN OVER AND PROFIT AFTER TAX FOR LAST 3 YEARS :

YEAR -1:

YEAR -2:

YEAR -3:
(COPY OF AUDITED ANNUAL ACCOUNTS FOR LAST 3 YEARS TO BE ENCLOSED)

3.0. **QUALITY MANAGEMENT SYSTEM:**

3.1. IS THE COMPANY ISO:9001:2000 CERTIFIED : YES / NO

3.1.1. IF YES, **ENCLOSE** COPY OF CERTIFICATE & TABLE OF CONTENTS OF QUALITY MANUAL.

3.1.2. IF NO, FORMATS VQS AA01 (QUALITY SYSTEM) ARE TO BE FILLED UP.

4.0. **EXPERIENCE LIST** FOR OFFERED/SIMILAR ITEMS :

(ATTACH LIST OF PRESENT CUSTOMERS WITH NAME AND ADDRESS FOR OFFERED/SIMILAR TYPE & SIZE OF ITEM/EQUIPMENT FOR WHICH REGISTRATION HAS BEEN SOUGHT AND WITH WHOM YOU HAVE CONTINUOUS BUSINESS SINCE LAST THREE YEARS)

5.0 **LIST OF ENCLOSURES** :

(BROCHURES, CATALOGUES, TECHNICAL LITERATURE, ETC.)

6.0 **ANY OTHER INFORMATION** :

SIGNATURE OF SUPPLIER :

NAME :

DESIGNATION :

DATE :

OFFICIAL SEAL

SUPPLIER'S AUTHORISED SIGNATORY

BHEL CERTIFIED ASSESSOR

You are visiting a PDF on www.bhel.com

BHARAT HEAVY ELECTRICALS LIMITED

Supplier Registration Form (Indian Supplier)

GUIDELINES TO INDIAN SUPPLIERS FOR FILLING UP

SUPPLIER REGISTRATION FORM

1. Registration Form may be obtained from Supplier Development Cell of respective BHEL Unit or downloaded from BHEL website www.bhel.com.
2. Any clarification with respect to procedure for registration may be obtained from the Supplier Development Cell of respective BHEL unit.
3. The Supplier Registration Form has four parts:

Part A	Organizational Information	Form no. VOR AA01
Part B	Quality System	Form no. VQS AA01
Part C	Technical Competence	Form no. VTC AA01
Part D	Score Sheet	Form no. VSS AA01

The set of formats to be filled by different category of suppliers is as follows:

Sl. No	Supplier Category	Formats
1.	Indian Suppliers (manufacturers)	- Organizational Information - Quality System - Technical Competence - Score sheet
2.	Agents / stockists / distributors / dealers	- Organizational Information - Score sheet

4. All sheets of above forms are to be filled up and signed by the authorized signatory.
5. Please attach separate sheet if the space provided is insufficient.
6. For any other information also, separate sheet may be attached.
7. Any information / clarification required by BHEL during evaluation must be given expeditiously.
8. Please ensure that all required enclosures are attached with the filled up Supplier Registration Form and list of enclosures is given as required.
9. The scoring of marks by Suppliers for self- assessment must be done as required against each information in all the above parts. Incomplete forms and forms without self assessment are likely to be rejected. If any question is not applicable or relevant to your organization, please mention accordingly. Questions left unanswered will get zero marks...
10. Scoring for questions on Quality System (Part B) is to done on 0-3 scale as follows:
    - 0 For non-compliance
    - 1 System exists in rudimentary stage
    - 2 System exists with minimal discrepancies
    - 3 System is in mature stage (i.e. meets all requirements)

The question with asterisk (*) mark is mandatory where supplier must achieve a minimum score of 2 marks.

You are visiting a PDF on www.bhel.com

11 Part-B of the form on Quality System need not be filled by ISO 9000-2000 accredited suppliers. Instead, the Table of Contents of Quality Manual may be submitted with the Registration Form.

12 Scoring for question on Technical competence is to be done on 0-3 scale as follows:

- 0 No capability
- 1 Requires continuous technical support of BHEL during execution of job.
- 2 Occasional technical support from BHEL
- 3 Can handle job without any technical support from BHEL.

The question with asterisk (*) mark is mandatory where supplier must achieve a minimum score of 2 marks.

13 Assessment Criteria shall be as follows:

Organizational Soundness:
- OS 1 : 85% and more
- OS 2 : 70% to less than 85%
- OS 3 : Less than 70%

Quality System:
- Q 1 - Overall system rating above 90%, rated 2 or better on all mandatory requirements and a rating of 70% or better in each section.
- Q 2 - Overall system rating 80 to 90%, rated 2 or better in all mandatory requirements and a rating of 60% or better in each section.
- Q 3 - Overall system rating above 70% and less than 80%, rated 2 or better on all mandatory requirements and a rating of 55% or better in each section.

Technical Competence:
- TC 1 - Above 90% and rated 2 or better in all mandatory reqts.
- TC 2 - 80 to less than 90% and rated 2 or better in all mandatory requirements.
- TC 3 - Above 70% and less than 80% and rated 2 or better in all mandatory requirements.

15 Please fill up the check-list given on next page and send along with the Supplier Registration Forms to BHEL.

You are visiting a PDF on www.bhel.com

BHARAT HEAVY ELECTRICALS LIMITED

Supplier Registration Form (Indian Supplier)

CHECK-LIST FOR INDIAN SUPPLIERS REGISTRATION FORM

Sl. No.	Check-Point	Yes/No
1.	Information against all points under "Organizational Information" (Part-A) has been given.	
2.	All enclosures and supporting documents have been enclosed.	
3.	Summary list of enclosures has been furnished as per S.N. 9.9 of Organizational Information form.	
4.	Are you an ISO 9001 -2000 accredited supplier?	
5.	If yes, have you enclosed "Table of Contents" of your Quality Manual and copy of ISO 9001 -2000 accreditation certificate?	
6.	If no, have you filled up Quality System formats given in Part B?	
7.	Technical requirements, specifications, drawings, standards have been obtained from BHEL before filling up Technical Competence, Part C.	
8.	All the pages of the form & enclosures have been signed by Authorized Signatory.	
9.	Scoring has been done in Part A, B and C.	
10	Total scoring has been done in score sheet Part D.	

Signature & seal

Date:

(**Authorized Signatory**)

Note: This check list is to be attached with the filled up Supplier Registration Form.

You are visiting a PDF on www.bhel.com

BHARAT HEAVY ELECTRICALS LIMITED

Supplier Registration Form (Indian Supplier)

Part A:

ALL COLUMNS SHOULD BE PROPERLY FILLED IN THE SPACE PROVIDED FOR. WHEREVER IT IS NOT APPLICABLE, PLEASE WRITE "NOT APPLICABLE". INCOMPLETE OR INCORRECT FORMS MAY NOT BE CONSIDERED. PLEASE ATTACH SEPARATE SHEET, IF SPACE AVAILABLE IS INADEQUATE.

SUPPLIERS HAVE TO ALLOT MARKS IN THE RELEVANT COLUMNS.

ORGANISATIONAL INFORMATION						
NAME OF THE APPLICANT SUPPLIER SEEKINGG REGISTRATION:- D&B D-U-N-S NUMBER: (DUN & BRADSTREET NINE DIGIT IDENTIFICATION NUMBER, NOT MANDATORY						
1.0 PRODUCTS / SYSTEM / SERVICES FOR WHICH REGISTRATION IS APPLIED FOR:				MARKS	MARKS BY SUPPLIER	MARKS BY BHEL
SL. NO.	DESCRIPTION	SIZE & RANGE	MFG.STD / IS / DIN / BS, ETC.			
				1		
TOTAL MARKS				1		
SUPPLIERS AUTHORISED SIGNATORY					BHEL CERTIFIED ASSESSOR	

You are visiting a PDF on www.bhel.com

ORGANISATIONAL INFORMATION

2.0 GENERAL INFORMATION :	Marks	Marks by Suppliers	Marks by BHEL
2.1 NAME OF APPLICANT SUPPLIER SEEKING REGISTRATION : HEAD OFFICE ADDRESS : TELEPHONE : FAX : E-MAIL : WEB SITE :	1		
2.2 NAME OF THE WORKS/DIVISION : ADDRESS : TELEPHONE : FAX : E-MAIL : WEB SITE :	1		
2.3 BRANCH OFFICE ADDRESS (IF ANY): TELEPHONE : FAX : E-MAIL :	1		
2.4 NAME OF CHIEF EXECUTIVE / PROPRIETOR / PARTNER & ADDRESS:	1		
2.5 OFFICIAL TO BE CONTACTED FOR CLARIFICATON : NAME : DESIGNATION: ADDRESS: TELEPHONE : FAX : E-MAIL : WEB SITE :	1		
TOTAL MARKS	5		

SUPPLIER'S AUTHORISED SIGNATORY **BHEL CERTIFIED ASSESSOR**

You are visiting a PDF on www.bhel.com

ORGANISATIONAL INFORMATION

3.0 OWNERSHIP INFORMATION :	MARKS	MARKS BY SUPPLIER	MARKS BY BHEL
DOCUMENTS TO BE FURNISHED 3.1 GOVT. OF INDIA UNDERTAKING : OR STATE GOVT. UNDERTAKING : OR LIMITED COMPANY, : MEMORANDUM AND ARTICLES OF ASSOCIATION OR PRIVATE COMPANY, : MEMORANDUM AND ARTICLES OF ASSOCIATION OR CO-OPERATIVE SOCIETY, : SOCIETY RULES AND BYE LAWS OR PARTNERSHIP FIRM , : PARTNERSHIP DEED OR PROPRIETORSHIP, : PROFESSION TAX REGN. AND MUNICIPAL REGN. ANY OTHER (SPECIFY) :	1		
3.2. NATURE OF BUSINESS : (MANUFACTURING UNIT/AGENTS/ DISTRIBUTORS/STOCKISTS)	1		
3.3. YEAR OF ESTABLISHMENT :	1		
TOTAL MARKS	3		

SUPPLIER'S AUTHORISED SIGNATORY **BHEL CERTIFIED ASSESSOR**

ORGANISATIONAL INFORMATION FOR THE PREVIOUS FOUR YEARS						Marks by Supplier $ (See below)	Marks by BHEL $ (See below)
4.0	**FINANCIAL INFORMATION**	Year 1	Year 2	Year 3	Year 4		
		(Years in ascending order, Money value in Rs. Lakhs)					
4.1	NET WORTH (Share Capital +Reserves)						
	Growth over previous year (%)						
4.2	LONG TERM DEBT / LOAN						
4.3	DEBT EQUITY RATIO Long term Debt (4.2) Net worth (4.1)						
4.4	INVESTMENT IN: Land & Building						
	Plant & Machinery						
	Other Fixed Assets						
4.5	1 NET CURRENT ASSETS a) Cash on hand						
	b) Account receivable						
	c) Inventories						
	Total						
	2 CURRENT LIABILITY a) Sundry creditors						
	b) Interest accrued but not due						
	c) Credit balance in sundry debtors						
	d) Other liabilities						
	Total						
	3 CURRENT RATIO Current assets {4.5 (1)} Current liability {4.5 (2)}						
4.6	SALES						
	Growth over previous year (%)						
4.7	PROFIT BEFORE TAX						
	Growth over previous year (%)						
4.8	PROFIT AFTER TAX						
	Growth over previous year (%)						
4.9	Whether the supplier has been referred to BIFR/NCLT. (If YES, **enclose details**)				YES / NO		
4.10	Whether the supplier is a potential sick company. (If YES, **enclose details**)				YES / NO		
Copies of annual accounts (Balance Sheet) for last four years along with Audit Report is to be submitted. Above details shall be highlighted in Balance Sheet.					Total Marks (out of 10)		

SUPPLIER'S AUTHORISED SIGNATORY **BHEL CERTIFIED ASSESSOR**

$: ONE MARKS EACH TO BE GIVEN FOR COMPLETE REPLY AGAINST SL. Nos. 4.1 to 4.10 (Total 10 marks)

You are visiting a PDF on www.bhel.com

ORGANISATIONAL INFORMATION

		MARKS	MARKS BY SUPPLIER	MARKS BY BHEL
5.0	**REGISTRATION PARTICULARS**			
5.1	INCOME TAX PERMANENT ACCOUNT NO. : (ENCLOSE COPY OF CERTIFICATE)	1		
5.2	CENTRAL SALES TAX REGISTRATION NUMBER : (ENCLOSE COPY OF CERTIFICATE)	1		
5.3	STATE SALES TAX REGISTRATION NUMBER : (ENCLOSE COPY OF CERTIFICATE)	1		
5.4	EXCISE DUTY REGISTRATION NUMBER : (ENCLOSE COPY OF CERTIFICATE)	1		
5.5	SERVICE TAX REGISTRATION NUMBER : (ENCLOSE COPY OF CERTIFICATE)			
5.6	EXCISE CONTROL CODE NUMBER : (ENCLOSE COPY OF CERTIFICATE)	1		
5.7	NATIONAL SMALL SCALE INDUSTRIES REGISTRATION NO. : (VALIDITY UPTO.....) (ENCLOSE COPY OF CERTIFICATE)	1		
5.8	SMALL SCALE INDUSTRIES REGISTRATION NO. : (VALIDITY UPTO .....) (ENCLOSE COPY OF CERTIFICATE)	1		
5.9	ANCILLARY STATUS RECOGNISED BY	1		
	TOTAL MARKS	9		
	SUPPLIER'S AUTHORISED SIGNATORY		BHEL CERTIFIED ASSESSOR	

ORGANISATIONAL INFORMATION

	MARKS	MARKS BY SUPPLIER	MARKS BY BHEL
6.1 TOTAL ORGANISATIONAL STRENGTH : **(ATTACH ORGANISATION CHART)** **GRADUATES DIPLOMA SKILLED NON-SKILLED** **ADMN &** **COMMERCIAL :** **ENGINEERING :** **TECHNOLOGY :** **MANUFACTURING :** **QUALITY :** **MAINTENANCE :** **SITE MANAGEMENT :** **OTHERS :** **TOTAL :**	1		
6.2 STANDBY ARRANGEMENT FOR POWER : **(GIVE DETAILS)**	1		
6.3 DOES THE COMPANY SELL ITS PRODUCT DIRECTLY : **YES / NO**	1		
6.4 IF NO, FURNISH NAME, ADDRESS : **OF AUTHORISED DEALER/STOCKIST** **WHOSE COMMITMENTS WILL BE** **HONOURED BY THE COMPANY.**	1		
TOTAL MARKS	4		

SUPPLIER'S AUTHORISED SIGNATORY **BHEL CERTIFIED ASSESSOR**

You are visiting a PDF on www.bhel.com

ORGANISATIONAL INFORMATION

7.0 LIST OF MANUFACTURING FACILITIES : (INCLUDING MATERIAL HANDLING FACILITY)					MARKS	MARKS BY SUPPLIER	MARKS BY BHEL
SL. NO.	DESCRIPTION & SPECIFICATION OF MACHINE & ITS MAKE YEAR OF MAKE & YEAR OF INSTALLATION	ACCURACY & FINISH ATTAINABLE	NO. OF MACHINES INSTALLED	REMARKS			
	IN-HOUSE FACILITIES ---------- OUT-SOURCED FACILITIES, IF ANY ----------				1		
TOTAL MARKS					1		

SUPPLIER'S AUTHORISED SIGNATORY BHEL CERTIFIED ASSESSOR

You are visiting a PDF on www.bhel.com

ORGANISATIONAL INFORMATION

8.0. LIST OF MEASURING FACILITIES, TESTING–EQUIPMENT AND INSPECTION FACILITIES :						MARKS	MARKS BY SUPPLIER	MARKS BY BHEL
SL. NO.	DESCRIPTION OF EQUIPMENT	SIZE, RANGE, CAPACITY & ACCURACY	MODE AND MAKE	LAST DATE OF CALIBRATION	QUANTITY			
	IN-HOUSE FACILITIES ---------- OUT-SOURCED FACILITIES, IF ANY ----------					1		
TOTAL MARKS						1		

SUPPLIER'S AUTHORISED SIGNATORY BHEL CERTIFIED ASSESSOR

You are visiting a PDF on www.bhel.com

ORGANISATIONAL INFORMATION

9.0 OTHER PARTICULARS :	MARKS	MARKS BY SUPPLIER	MARKS BY BHEL
9.1 IF THE COMPANY IS ALREADY IN BUSINESS WITH ANY OF BHEL UNITS, GIVE : 9.1.1 BHEL UNIT'S NAME : 9.1.2 SUPPLIER REGISTRATION NO. : 9.1.3 ITEMS FOR WHICH REGISTERED & THEIR SPECIFICATION : (ENCLOSE PROOF OF SUCCESSFUL EXECUTION OF ATLEAST 3 PURCHASE ORDERS)	1		
9.2 IS THE COMPANY APPROVED BY ASME / NTPC / NPC / EIL / DGS&D / RAILWAYS / IBR / LLOYDS ETC? : YES/NO (ENCLOSE DOCUMENTARY EVIDENCE)	1		
9.3 IS THE COMPANY AN ISO 9001-2000 APPROVED?: YESS/NO (ENCLOSE CERTIFICATE)	1		
9.4 IS THE COMPANY AN ISO:14000 APPROVED?: YES/NO (ENCLOSE CERTIFICATE)	1		
9.5 IS THE COMPANY OHSAS-18000 APPROVED? : YES/NO (ENCLOSE CERTIFICATE)	1		
9.6 TECHNICAL COLLABORATOR : (FOREIGN OR INDIGENOUS) (ENCLOSE DOCUMENTARY EVIDENCE)	1		
9.7 NAME & ADDRESS OF CONCERN(S) HAVING SUBSTANTIAL INTEREST IN : (NAME OF THE OTHER COMPANY, COMMON DIRECTOR, PARTNER, OWNER ETC.)	1		
TOTAL MARKS	1		

SUPPLIER'S AUTHORISED SIGNATORY BHEL CERTIFIED ASSESSOR

You are visiting a PDF on www.bhel.com

ORGANISATIONAL INFORMATION

	MARKS	MARKS BY SUPPLIER	MARKS BY BHEL
9.8 DIRECTORS / PARTNERS, IF RELATED TO ANY BHEL EMPLOYEE. NAME : STAFF NO. : DESIGNATION : DEPARTMENT : RELATIONSHIP :	1		
9.9 IF ANY EX-BHEL PERSONNEL IS EMPLOYED BY THE COMPANY, MENTION HIS / HER DETAILS OF LAST POSTING. NAME : STAFF NO. : DESIGNATION : DEPARTMENT :	1		
DATE OF LEAVING SERVICE :	1		
9.10 COMPANY'S WEEKLY HOLIDAYS : WORKS OFFICE			
9.11 EXPERIENCE LIST: (ATTACH LIST OF PRESENT CUSTOMERS WITH NAME & ADDRESS FOR OFFERED/SIMILAR TYPE & SIZE OF ITEM / EQUIPMENT FOR WHICH REGISTRATION HAS BEEN SOUGHT AND WITH WHOM YOU HAVE CONTINUOUS BUSINESS SINCE LAST THREE YEARS)	1		
9.12 LIST OF ENCLOSURES : ATTACH LIST OF ENCLOSURES	1		
10 I/WE GIVE THE UNDERTAKING THAT BHEL DRAWINGS & SPECIFICATIONS SHALL NOT BE USED IN ANY WAY DETRIMENTAL TO THE INTEREST OF BHEL AND / OR FOR SUPPLY OF ANY MATERIAL, PRODUCT OR SERVICES DIRECTLY OR INDIRECTLY TO ANY OTHER CUSTOMER.	--	--	--
TOTAL MARKS	5		

SUPPLIERS AUTHORISED SIGNATORY BHEL CERTIFIED ASSESSOR

You are visiting a PDF on www.bhel.com

I. INCOMING MATERIAL CONTROL	PROCEDURE 0-3		SYSTEM IN EFFECT 0-3		RECORDS 0-3	
	MARKS BY SUPPLIER	MARKS BY BHEL	MARKS BY SUPPLIER	MARKS BY BHEL	MARKS BY SUPPLIER	MARKS BY BHEL
1. A FORMALIZED SUPPLIER RATING, EVALUATION, CERTIFICATION PROGRAMME HAS BEEN ESTABLISHED WHEREIN QUALITY PERFORMANCE IS ONE OF THE CRITERIA.						
***2. INCOMING SHIPMENT IS VERIFIED PRIOR TO STORAGE OR USE.**						
TOTAL MARKS						

II. PROCESS CONTROL	PROCEDURE 0-3		SYSTEM EFFECT 0-3		RECORDS 0-3	
	MARKS BY SUPPLIER	MARKS BY BHEL	MARKS BY SUPPLIER	MARKS BY BHEL	MARKS BY SUPPLIER	MARKS BY BHEL
*1.WORK INSTRUCTIONS ARE DOCUMENTED, UPDATED & FOLLOWED BY WORKERS.						
*2.REQUIRED TOOLS, JIGS, FIXTURES ARE IDENTIFIED AND USED.						
3. PROCEDURE FOR QUALIFICATION, IF APPLICABLE, AND REVALIDATION OF QUALIFICATION OF WORKERS. EXIST SUCH AS: ▪ WELDERS ▪ NDT PERSONNEL						
4. PREVENTIVE MAINTENANCE ACTIVITIES ARE PERFORMED ON CRITICAL MACHINES & RECORDS KEPT.						
5. MATERIAL IDENTIFICATION AND ACCEPTANCE STATUS IS MAINTAINED THROUGHOUT THE MANUFACTURING PROCESS & DURING STORAGE						
*6.AVAILABILITY OF UPDATED DRAWING/ SPECIFICATION AT WORKPLACE.						
7. PRESERVATION, PAINTING & PACKING PROCEDURE EXISTS.						
TOTAL MARKS						

Scoring for questions on Quality System (Part B) is to be done on 0-3 scale as follows:-

0- Non Compliance; 1- System exists in Rudimentary Stage; 2- System exists with minimal discrepancies

3- System is in Mature Stage i.e. meets all requirements

The question win asterisk (*) mark is mandatory where supplier must achieve a minimum score of 2-marks.

SUPPLIERS AUTHORISED SIGNATORY **BHEL CERTIFIED ASSESSOR**

You are visiting a PDF on www.bhel.com

III.	CONTROL OF NON-CONFORMANCE	PROCEDURE 0-3		SYSTEM IN EFFECT 0-3		RECORDS 0-3	
		MARKS BY SUPPLIER	MARKS BY BHEL	MARKS BY SUPPLIER	MARKS BY BHEL	MARKS BY SUPPLIER	MARKS BY BHEL
*1.	RECORD OF REWORK/ RECTIFICATION IS KEPT.						
2.	SYSTEM OF REVIEW AND ANALYSIS OF REPEATED FAILURES AND THEIR PREVENTION IN FUTURE.						
	TOTAL MARKS						

IV.	CONTROL OF MEASURING & MONITORING DEVICES	PROCEDURE 0-3		SYSTEM IN EFFECT 0-3		RECORDS 0-3	
		MARKS BY SUPPLIER	MARKS BY BHEL	MARKS BY SUPPLIER	MARKS BY BHEL	MARKS BY SUPPLIER	MARKS BY BHEL
1.	SYSTEM OF CALIBRATION OF GAUGES, FIXTURES & INSTRUMENTS EXISTS						
*2.	MASTER GAUGES / STANDARDS ARE TRACEABLE TO RECOGNIZED NATIONAL STANDARDS.						
	TOTAL MARKS						
VI	CONFORMANCE TO SAFETY REQUIREMENTS :	PROCEDURE 0-3		SYSTEM IN EFFECT 0-3		RECORDS 0-3	
		MARKS BY SUPPLIER	MARKS BY BHEL	MARKS BY SUPPLIER	MARKS BY BHEL	MARKS BY SUPPLIER	MARKS BY BHEL
*1.	ADEQUATE SAFETY PRECAUTIONS ARE BEING TAKEN IN PLANT FOR ALL PERSONNEL.						
	TOTAL MARKS						

SUPPLIERS AUTHORISED SIGNATORY BHEL CERTIFIED ASSESSOR

You are visiting a PDF on www.bhel.com

v. CUSTOMER SUPPLIER COMMUNICATION	PROCEDURE 0-3		SYSTEM IN EFFECT 0-3		RECORDS 0-3	
	MARKS BY SUPPLIER	MARKS BY BHEL	MARKS BY SUPPLIER	MARKS BY BHEL	MARKS BY SUPPLIER	MARKS BY BHEL
*1. TENDER DOCUMENTS ARE REVIEWED WITH REFERENCE TO CUSTOMER REQUIREMENT BOTH TECHNICALLY & FROM DELIVERY POINT OF VIEW. IN CASE OF DEVIATION, IN TECHNICAL SPECIFICATIONS AND DELIVERY CONDITIONS, THE DEVIATIONS ARE IDENTIFIED AND CLEARLY SPELT OUT IN OFFER.						
2. SYSTEM OF SUBMISSION OF DOCUMENTS LIKE: (A) INVOICE. (B) PACKING LIST. (C) TEST CERTIFICATE. (D) INSPECTION DATA.						
3. ORGANIZATION OF AFTER SALES SERVICE AND RESPONSE TIME FOR ATTENDING COMPLAINTS.						
TOTAL MARKS						

SUPPLIERS AUTHORISED SIGNATORY BHEL CERTIFIED ASSESSOR

You are visiting a PDF on www.bhel.com

Part C:

TECHNICAL COMPETENCE

TECHNICAL COMPETENCE (WHERE DESIGN SPECIFICATION IS GIVEN BY BHEL)	MARKS 0-3	
	MARKS BY SUPPLIER	MARKS BY BHEL
*1. SUPPLIER UNDERSTANDS THE PRODUCT SPECIFICATION.		
2. SUPPLIER UNDERSTANDS THE INSPECTION REQUIREMENTS.		
*3. SUPPLIER HAS PROCESS CAPABILITY TO ACHIEVE THE PRODUCT SPECIFICATION/DIMENSIONAL REQUIREMENT.		
4. SUPPLIER HAS EXPERIENCED MANPOWER TO CARRY OUT THE JOB.		
TOTAL MARKS OUT OF POSSIBLE (12) = ------- %		

OR

TECHNICAL COMPETENCE (WHERE PERFORMANCE SPECIFICATION IS GIVEN BY BHEL)	PROCEDURE 0-3		SYSTEM IN EFFECT 0-3		RECORDS 0-3	
	MARKS BY SUPPLIER	MARKS BY BHEL	MARKS BY SUPPLIER	MARKS BY BHEL	MARKS BY SUPPLIER	MARKS BY BHEL
1. DESIGN CAPABILITY						
2. ADEQUACY OF QUALITY ASSURANCE PLAN						
*3. PROCESS CAPABILITY FOR COMPONENTS						
*4. ADEQUATE OF TESTING						
TOTAL MARKS OUT OF POSSIBLE (36) = --------- %						

Here:

Score of 0 indicates "No capability"
Score of 1 indicates "Requires continuous technical support of BHEL during Execution of job"
Score of 2 indicates "Occasional technical support from BHEL"
Score of 3 indicates "Can handle BHEL's job without any Technical Assistance."

The question with asterisk (*) mark is mandatory where supplier must achieve a minimum score of 2 marks.

SUPPLIER'S AUTHORISED SIGNATORY **BHEL CERTIFIED ASSESSOR**

Part D: **SCORE SHEET**

1. ORGANISATIONAL SOUNDNESS :

Each question should be answered. No question is to be left unanswered. If any of the questions is not relevant to your organization, please mention so against that question (but do not leave the question unanswered). Each question answered carries (1) mark. Questions left unanswered will get (0) score.

SL NO	PARAMETER	CRITERIA	RANGE	MARKS	MARKS BY SUPPLIER	MARKS BY BHEL
1.	**NET WORTH** REFER SL.NO.4.1 OF SUPPLIER REGISTRATION FORM PAGE 4/17, PART A. AVERAGE OF THREE YEARS TO BE WORKED OUT	GROWTH OVER THE PREVIOUS YEAR	MORE THAN 10%	4		
			5 – 10 %	3		
			LESS THAN 5%	1		
2.	**SALES FOR CURRENT YEAR** SL. NO.4.6 OF PAGE 4/17, PART A	GROWTH OVER THE PREVIOUS YEAR	MORE THAN 10%	4		
			5 - 10%	3		
			> 0 < 5%	1		
			0% & BELOW	0		
3.	**DEBT EQUITY RATIO** I.E. LONG TERM DEBT / SHARE CAPITAL (SL.NO.4.3 OF PAGE 4/17, PART A)	1 : 1		4		
		1.1 UP TO 1.5:1		3		
		1.6 & ABOVE :1		1		
4.	**CURRENT RATIO** I.E. CURRENT ASSETS/CURRENT LIABILITY (SL. NO.4.5 OF PAGE 4/17, PART A)	2 : 1		4		
		LESS THAN 2 UPTO 1.1:1		3		
		1:1		1		
5.	**PROFIT BEFORE TAX** SL. NO.4.7 OF PAGE 4/17 , PART A	GROWTH OVER THE PREVIOUS YEAR	MORE THAN 10%	4		
			5 – 10%	3		
			LESS THAN 5%	1		
6.	**PROFIT AFTER TAX** SL. NO. 4.8 OF PAGE 4/17 , PART A	GROWTH OVER THE PREVIOUS YEAR	MORE THAN 10%	4		
			5 - 10%	3		
			LESS THEN 5%	1		

SUPPLIER'S AUTHORISED SIGNATORY **BHEL CERTIFIED ASSESSOR**

Part D: **SCORE SHEET**

SL. NO.	PARAMETER	MARKS	MARKS BY SUPPLIER	MARKS BY BHEL
7.	SL. NO. 4.9 OF PAGE 4/17 , PART A – IF REFERRED TO BIFR / NCLT	(-) 24		
8.	SL. NO. 4.10 OF PAGE 4/17 , PART A – IF POTENTIALLY SICK	(-) 12		
9.	FOR SUPPLIER HAVING STANDBY ARRANGEMENT OF POWER. (SL. NO. 6.2 OF PAGE 6/17 , PART A)	3		
10.	SUPPLIER HAVING CONTINUOUS BUSINESS FOR MARE THAN 3 YEARS. (SL. NO. 9.8 OF PAGE 10 /17 , PART A) BEYOND 3 CUSTOMERS UPTO 3 CUSTOMERS NO CUSTOMER	 4 3 0		
11.	MANUFACTURING FACILITIES : (SL. NO. 7.0 OF PAGE 7/17 , PART A) SUPPLIER HAVING ADEQUATE FACILITIES SUPPLIER HAVING SUBSTANTIAL FACILITY SUPPLIER HAVING INADEQUATE FACILITIES	 3 2 0		
12.	MEASURING AND TESTING FACILITIES : (SL. NO. 8.0 , PAGE 8/17 , PART A) ADEQUATE MEASUREMENT FACILITIES SUBSTANTIAL MEASURING FACILITIES INADEQUATE FACILITIES	 3 2 0		
13. If answer to Question 9.3 of page 9/17, part A is yes i.e. ISO 9001 company If answer to Question 9.4 of page 9/17, part A is yes i.e. ISO 14000 company If answer to Question 9.5 OF PAGE 9/17, part A is yes i.e. ISO 18000 company		 3 1 1		
	TOTAL MARKS SCORED (SL. 01 TO 13 ABOVE)	42		
	TOTAL MARKS SCORED (PAGE 01 TO 10)	46		
	TOTAL MARKS (ORGANISATIONAL SOUNDNESS)	88		
	TOTAL MARKS (ORGANISATIONAL SOUNDNESS) : PERCENTAGE (%) CATEGORY OF SUPPLIER : OS 1 (85 % & MORE) OS 2 (70 % TO LESS THAN 85 %) OS 3 (LESS THAN 70 %)	Mention Category		

SUPPLIER'S AUTHORISED SIGNATORY BHEL CERTIFIED ASSESSOR

You are visiting a PDF on www.bhel.com

Part D: **SCORE SHEET**

FORM NO. VSSAA01 (INDIAN SUPPLIER)

QUALITY SYSTEM (SCORING CRITERIA):

	SUMMARY:	MARKS SCORED / OUT OF POSSIBLE (BY SUPPLIER)		MARKS ASSESSED / OUT OF POSSIBLE(BY BHEL)	
I.	Incoming Material Control	---------- / 18	------%	---------- / 18	------%
II.	Process Control	---------- / 63	--------%	---------- / 63	--------%
III.	Control of Non-Conformance	---------- / 18	--------%	---------- / 18	--------%
IV	Control of measuring & monitoring	---------- / 18	--------%	---------- / 18	--------%
V.	Conformance to Safety Requirements	---------- / 09	--------%	---------- / 09	--------%
VI.	Customer-Supplier Communication	----------/ 27	--------%	---------- / 27	--------%
	TOTAL =	----------/ 153	--------%	----------/ 153	--------%
	Category of Supplier Q1 (Tick category)	- Overall system rating above 90%, rated 2 or better on all mandatory requirement and a rating of 70% or better in each section or supplier is ISO 9001:2000 certified (subject to verification).			
	Q 2	- Overall system rating 80 to 90%, rated 2 or better in all mandatory requirement and a rating of 60% or better in each section.			
	Q 3	- Overall system rating above 70% and less than 80%, rated 2 or better on all mandatory requirements and a rating of 55% or better in each section.			

TECHNICAL COMPETENCE:

Tick category as per score on page 14.

SUMMARY:	MARKS SCORED / OUT OF POSSIBLE 12 OR 36 MARKS (BY SUPPLIER)		MARKS ASSESSED / OUT OF POSSIBLE 12 OR 36 MARKS (BY BHEL)	
Technical competence or	---------- / 12	------%	---------- / 12	------%
Technical competence	---------- / 36	--------%	---------- / 36	--------%
Category of Supplier TC 1 – TC 2 – TC 3 –	 Above 90 % and rated 2 or better in all mandatory requirements. 80 to less than 90% and rated 2 or better in all mandatory requirements. Above 70% and less than 80% and rated 2 or better in all mandatory requirements.			

SUPPLIER'S AUTHORISED SIGNATORY **BHEL CERTIFIED ASSESSOR**

You are visiting a PDF on www.bhel.com

BANK GUARANTEE BOND

WAM 28

(Paragraph 4.9.6 of – Works Accounts Manual)

1. In consideration of the Bharat Heavy Electricals Limited, Siri Fort, New Delhi through HEEP Hardwar Division (hereinafter called 'the Company') having agreed to exempt_____(hereafter called 'the said Contractor' which term includes 'Suppliers' for the purpose of this Bond) from the demand under the terms and conditions of an Agreement dt. _____ made between _____ and _____ for (hereafter called 'the said Agreement') of Security Deposit for the due fulfillment by the said Contractor of the terms and conditions contained in the said Agreement, on production of a Bank Guarantee for Rs. _____ (Rupees _____ only) we, _____

(Indicate the name of the Bank)

(hereinafter referred to as 'the Bank') at the request of _____ _____

Contractor(s) do hereby undertake to pay to the Company an amount not exceeding Rs. _____ against any loss or damage caused to or suffered or would be caused to or suffered by the Company by reason of any breach by the said Contractor(s) of any of the terms and conditions contained in the said Agreement.

2. We, _____ do hereby undertake

(indicate the name of the Bank)

to pay the amounts due and payable under this guarantee without any demur, merely on a demand from the Company stating that the amount claimed is due by way of loss or damage caused to or would be caused to or suffered by the Company by reason of breach by the said Contractor(s), of any of the terms or conditions contained in the said Agreement or by reason of the contractor(s), failure to perform the said Agreement. Any such demand made on the Bank shall be conclusive as regards the amount due and payable by the Bank under this guarantee. However, our liability under this guarantee shall be restricted to an amount not exceeding Rs. _____ .

3. We undertake to pay to the Company any money so demanded notwithstanding any dispute or disputes raised by the Contractor(s) in any suit or proceeding pending before any Court or Tribunal relating thereto our liability under this present being absolute and unequivocal.

The payment so made by us under this bond shall be valid discharge of our liability for payment thereunder and the Contractor(s) shall have no claim against us for making such payment.

4. We _____further agree that the Guarantee
(Indicate the name of the bank)
herein contained shall remain in full force and effect during the period that would be taken for the performance of the said Agreement and that it shall continue to be enforceable till all the duce of the Company under or by virtue of the said Agreement have been fully paid and its claims satisfied or discharged or till _____Office / Department / Division of Bharat Heavy Electricals Limited certifies that the terms and conditions of the said Agreement have been fully and property carried out by the said contractor(s) and accordingly discharges this guarantee. Unless a demand or claim under this guarantee is made on us in writing on or before the _____, we shall be discharged from all the liability under this guarantee there after.

5. We, _____, further agree with the company that
(Indicate the name of the bank)
the Company shall have the fullest liberty without our consent and without affecting in any manner our obligations hereunder to vary any of the terms and conditions of the said Agreement or to extend time to performance by the said contractor(s) from time to time or to postpone for any time or from time to time any of the powers exercisable by the company against the said contractor(s) and to forbear or enforce any of the terms and conditions relating to the said Agreement and we shall not be relieved from our liability by any reason of any such variation or extension being granted to the said contractor(s) or for any forbearance, act or omission on the part of the company or any indulgence by the company to the said contractor(s) or by any such matter or thing whatsoever which under the law relating to sureties would but for this provision have effect of so relieving us.

6. This guarantee will not be discharged due to the change in the constitution of the Bank or the contractor(s)

7. We_____ lastly undertake not to revoke
(Indicate the name of the bank)
this guarantee during its currency except with the pervious consent of the Company in writing.

Dated the_____ day of _____

For _____
(Indicate the name of the Bank)

LIST OF THE MEMBER BANK

State Bank of India CAG Branch, 10th Floor, Vijaya Building Barakhamba Road New Delhi-110 001	Deutsche Bank Tolstoy Marg New Delhi-110 001
CANARA BANK 74, Janpath New Delhi-110 001	HDFC Bank Ltd. 5th Floor, HT House K G Marge New Delhi-110 001
Punjab National Bank 74, Janpath New Delhi-110 001	CITI Bank N A Jeevan Vihar Building Sansad Marg New Delhi-110 001
Bank of Baroda Corporate Banking Branch 11th Floor, BOB Building Sansad Marg New Delhi-110 001	STANDARD CHARTERED BANK H2 Block, Connaught Place New Delhi - 110 001
State Bank of Hyderabad Surya Kiran Building, K G Marge New Delhi-110 001	ICICI Bank Ltd ICICI Tower, Bisham Pitamah Marg, Pragti vihar, New Delhi – 110 003
State Bank of Mysore Antriksh Bhawan, KG Marg New Delhi – 110 001	IDBI Bank Ltd. 19, KG Marg, Surya Kiran Building New Delhi – 110 003
State Bank of Mysore Industrial Finance Branch Ramanashree Arcade MG Road, Bangalore – 560 001	HSBC Ltd. ECE House 28, KG Marg New Delhi – 110 001
State Bank of Travancore Travancore House, 1 F Branch, KG Marg New Delhi – 110 001	

NTPC

ANNEXURE-11

SUB-CONTRACTOR QUESTIONNAIRE

(To be filled in by the Contractor/Sub contractor)

Approval Desired for process/item(Rating/Size/Type)

_____

_____

1. Name of Company :
   (Sub- Contractor)

2. Address of Regd. Office

_____	Tel _____
_____	Fax _____
_____	Gram _____
_____	TLX _____

3. Address of Factory

_____	Tel _____
_____	Fax _____
_____	Gram _____
_____	TLX _____

4. Branch/Liaison Office in Delhi:

_____	Tel _____
_____	Fax _____
_____	Gram _____
_____	TLX _____

NTPC

5. Person'(S) to be Contacted

Place	Name(S)	Official Capacity	Telephone No(s)
Regd. Off			
Factory			
Branch/ Liaison Off.			

6. Nature of Company :Proprietary/Partnership/Pv. Ltd. Public Ltd.

Works Details:

7. Year of Factory Establishment :

8. Year of Commencement of Manufacture :

9. Floor Area-Total Area :
   Covered Area

10. Electric Power-Connected Load :
    Electric Power-Standby Argmt :

11. Fiancé-Total Capital
    -Annual Turnover For pat three years.
    -Limit of Credit Facility available From the Banks. :

12. Do you have in-house Department for :
    a) Design Yes/No
    b) Research & Development Yes/No
    c) Manufacturing/Production Yes/No

NTPC

13. Shift works per day One/Two/Three

14. Details regarding employees :

Status Division	Graduate		Diploma	Skilled	Un-Skilled	Remarks
	Technical	Non-Tech.				
Production						
Quality Control						
Admn & other Supporting Activities						

15. Please enclose a copy of company's organisation chart. :

16. Trade Name of Product(if any) :

17. Manufacturing capacity details :

Sl No.	Product	Licensed Capacity	Installed Capacity

18. Brief details of items manufactured :

Sl.No	Item & Material	Description(type/Size/Rating)	Annual Production for last three years		
			I	II	III

NTPC

19. Details of foreign collaboration,

Sl. No.	Product	Name & Address of Collaborator	Collaboration		
			Scope	Year	Valid upto

20. Have your product been type tested by any external agency ? If so, give details

Sl. No	Product	Test (Size Type & Class)	Test Report No.	Next Due Date

21. Indicate Approval/Certification by National/International standard/agencies applicable subject product.

Sl. No.	product	Code/Standard	License No & Date

NTPC

22. Have you been approved by any third party/statutory agency? If so, indiente detail and enclose copies of approval letters.

Sl. No	Item/ Material	Description Size/Type/Class	Agency	Date of Approval	Next due Date

23. Reference list(Experience in the particular type of equipment).

Sl. No	Item/ Material	Type & Capacity	Customer(End user) With Address	Qty.Price Delivery date	Operating since Month/Year

NTPC

24. (a) Specific to process & product facilities :

Sl. No	Description Of machine	Capacity Nos.	Location Shop	Make	Year of Manufg.

NTPC

24. (b) Other/General facilities :

Sl. No.	Description Of machines	Capacity Nos.	Location (Shop)	Make	Year of Manufg.
1)	Material Handling Mobile Crane Fork Lift Over Head Cranes				
2)	Metal Cutting & Bending				
3)	Casting				
4)	Forging				
5)	Fabrication				
6)	Welding				
7)	Machining				
8)	Heat Treatment				
9)	Sheet Metal				
10)	Fettling & Cleaning Sand Blasting Shot Blasting Pickling				
11)	Painting				
12)	Metal Coating				
13)	Protection before packing				
14)	Packing				
15)	Other				

NTPC

25. (a) Facilities for Testing & Inspection :

Sl. No.	Description	Capacity Nos.	Nos.	Year of Manufg.	Make	Approval Qualification

25. (b) If In-house testing facilities are not available, indicate source (a) of testing with relevant details :

Sl. No.	Source of Testing	Description	Capacity	Nos.	Year of Manufg.	Make	Approval Qualification

25. (c) Details of any other laboratory :

26. (a) Details of any Govt. laboratory facilities available in area :

NTPC

26. (b) Product related testing facilities(Type/Performance/Routine/Acceptance Tests):

27. Source of Row Materials (including imported raw materials) :

a) Type Source

b) Raw material storage & identification :

28. QUALITY MANAGEMENT

28.1 General

28.1.1 Organisation Chart of Quality Management : Attached : (Y/N)

28.1.2 Head of QC Department reports to :

28.1.3 Do you have a written Quality Control

28.1.4 Are written Quality Control Instruction sheets prepared and properly used ?

28.1.5 Are records generated during inspection maintained & available for review ?

28.1.6 Are final inspection areas clean, adequately lighted & of suitable size ?

28.1.7 Are written procedure defining stage wise operations and functions on shop floor established and followed ?

28.1.8 Are Quality Control checks adequate to maintain desired quality right from incoming stage to final operation ?

28.1.9 In 100% of adequate sampling inspection used ?

28.1.10 Are statistical quality control techniques used ?

28.2 **Corrective Action**

28.2.1 Dose the system provide for proper detection of inferior quality and correction of its assignable causes ?

28.2.2 Is adequate action taken to correct the causes of defects in product ?

28.2.3 Are analysis made to identify trends to wards product deficiencies ?

28.2.4 Dose corrective extend to products ?

28.3 **Documentation control**

28.3.1 Dose the system for clear and precise stipulation of responsibilities for documentation issue & change control ?

28.3.2 Re change made in writing ?

28.4 **Control of inspection, measuring & Testing equipment's**

28.4.1 Are necessary gauges,testing and measuring equipment's. available and used ?

28.4.2 Are testing and measuring equipment's properly maintained ?

28.4.3 Is there recorded control on calibration of equipment's ?

28.5 **Control of procured supplies & services**

28.5.1 Do the vendor sub-contractor's purchasing document refer to specific design manufacturing and testing requirements ?

28.5.2 Do purchasing documents also contain special requirements ?

28.5.3 Are requirements for necessary tests and inspection of row material specified in purchasing document ?

29. CONSISTENCY IN SUPPLY

29.1 Has the vendor/sub-contractor produced items of similar nature in past ?

29.2 Has the vendor/sub-contractor maintained delivery commitments in past ?

29.3 Has there been frequent labour trouble in past?

29.4 Has there been major upset due to fault material management ?

NTPC

29.5 In the system of planing & scheduling resilient enough to overcome temporary setbacks and make up lost time?

29.6 Can the vendor/sub-contractor quickly off load the work to other reliable sub-vendors:
If Yes, the name of sub-vendor:

30. Order booking position as on date in terms of:

a) Value
b) Time

31. Any special information

32. I CERTIFY THAT THE INFORMATION SUPPLIED HEREIN (INCLUDING ALL PAGE ATTACHED) IS CORRECT TO THE BEST OF MY KNOWLEDGE.

SEAL

SIGNATURE…….

NAME ……

DESIGNATION …….

M/S …….

PLACE ……

DATE …….

LIST OF ENCLOSER

1.

2.

3.

4.

FIRST ANGLE PROJECTION

(ALL DIMENSIONS ARE IN mm)

DRG. NO. 11360100051

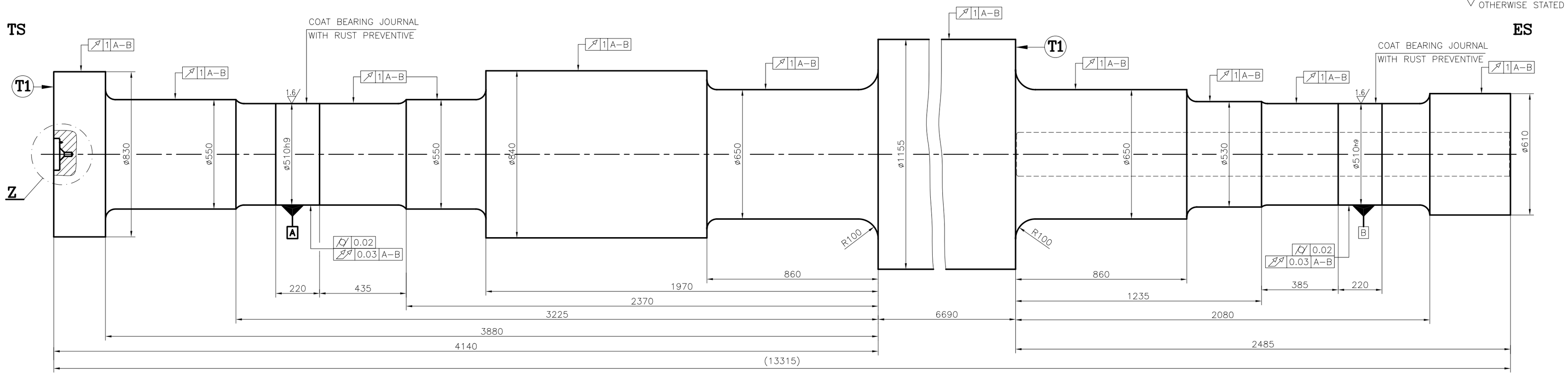

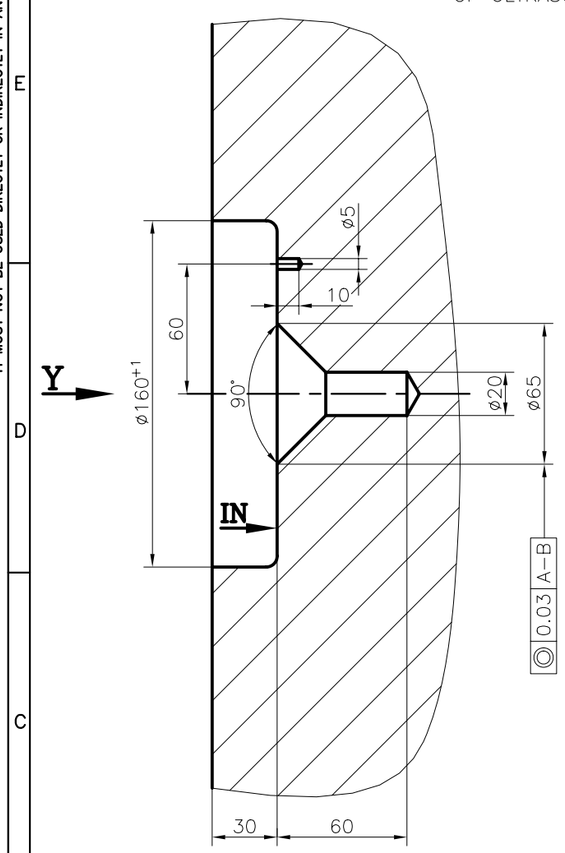

DETAIL–Z

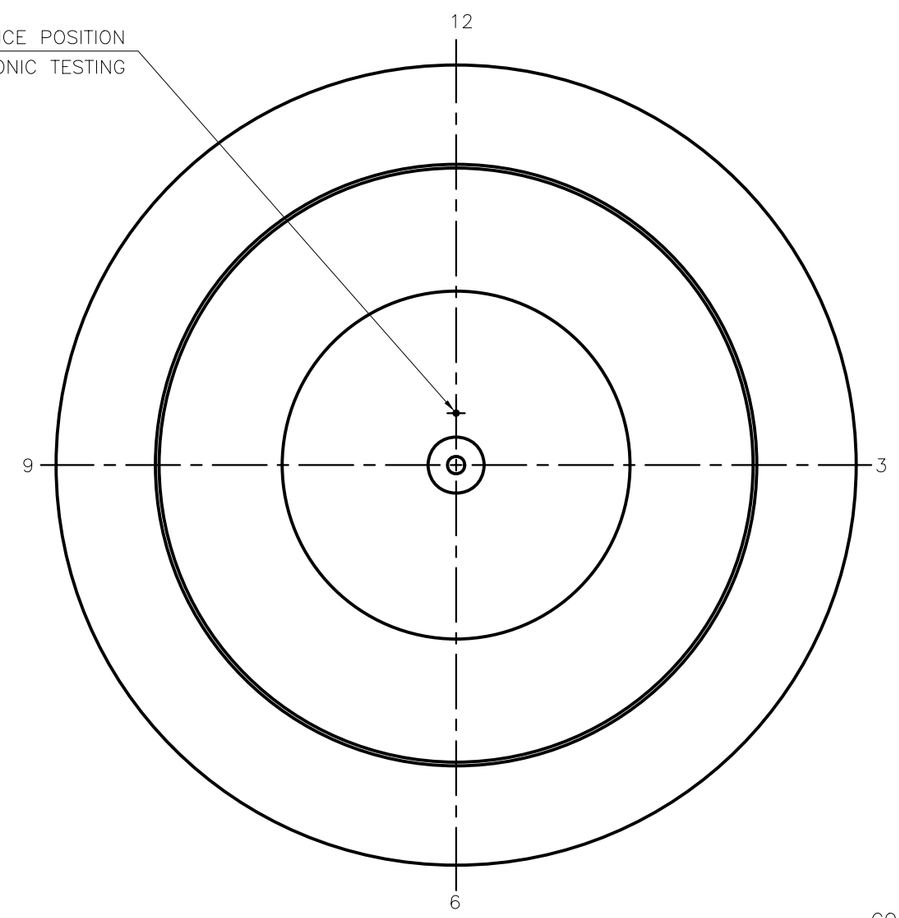

VIEW–X

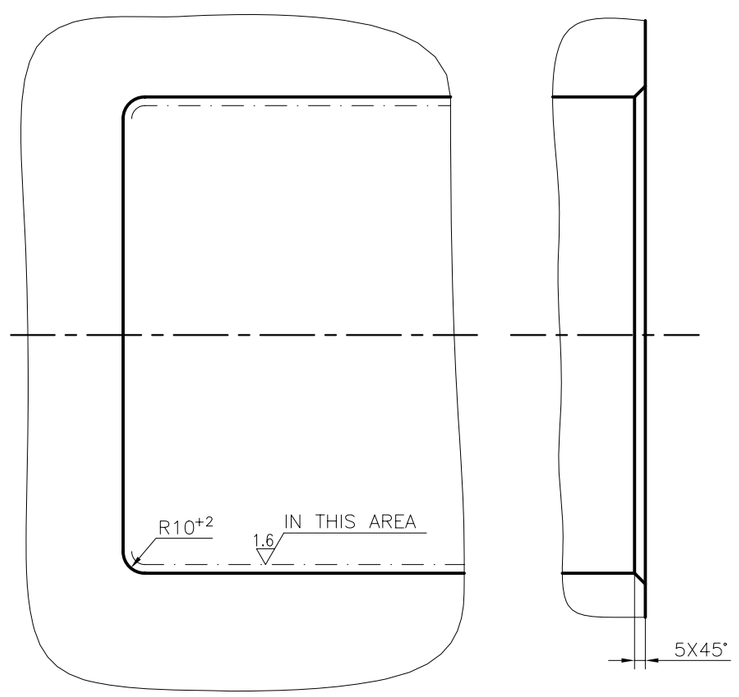

DETAIL–Y

DETAIL–W

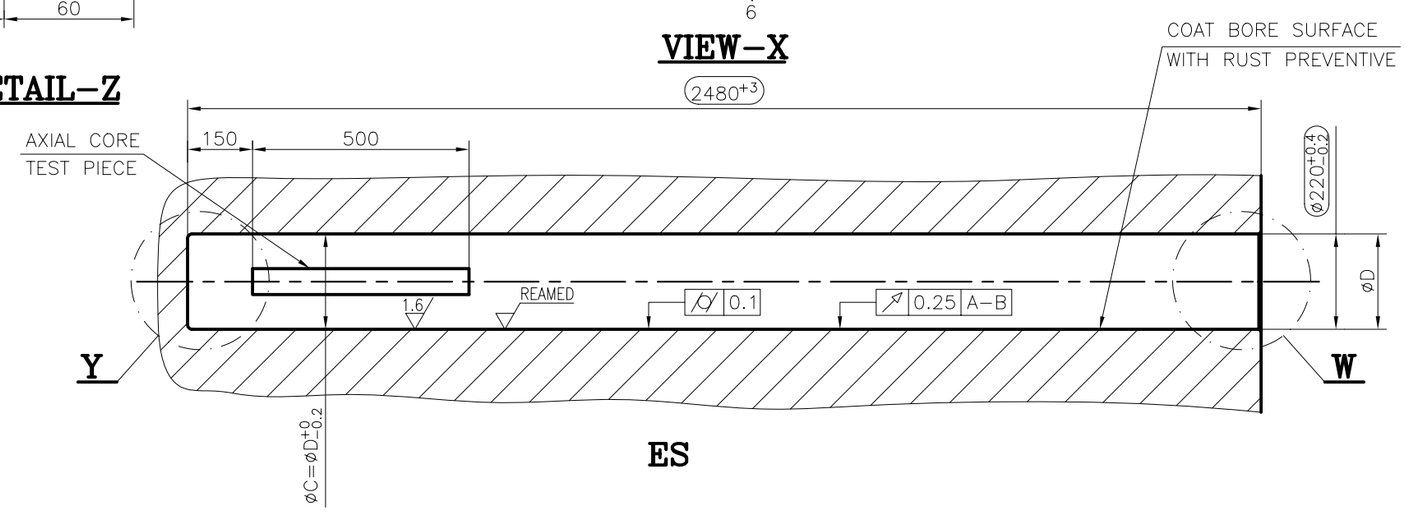

ES

TECHNICAL REQUIREMENTS

1. FORGING SHALL BE SUPPLIED AS PER SPECIFICATION NO. HW19476.
2. ALLOWABLE TOLERANCES ON DIMENSIONS HAVING NO TOLERANCES: OUTSIDE: +1mm. INSIDE: −1mm.
3. THE SUPPLIER TO TAKE OUT TANGENTIAL SPECIMEN FROM THE LOCATIONS MARKED AS T1 AND T2 FOR MECHANICAL TESTING. PART OF TEST SAMPLE SHALL BE LEFT INTEGRAL WITH SHAFT FOR RETESTING AT BHEL WORKS. (IF REQUIRED)
4. THE SUPPLIER SHALL TREPAN THE AXIAL CORE AFTER TAKING PERMISSION FROM BHEL. THE PERMISSION SHALL BE BASED ON THE TEST RESULTS OF T1, T2, ULTRASONIC TEST AND RESIDUAL STRESS.
5. AXIAL CORE TESTING SHALL BE DONE AS PER SPECIFICATION NO. HW19476. BALANCE CORE DULY MARKED WITH IDENTIFICATION NO SHALL BE SENT TO BHEL ALONGWITH THE FORGING. INNER & OUTER ZONES OF THE CORE SHALL BE DULY MARKED FOR IDENTIFICATION.
6. THE RESULTS OF AXIAL CORE TESTING SHALL BE SENT TO BHEL.
7. THE AXIAL BORE SHALL BE COATED WITH RUST PREVENTIVE TECTYL–858 C AND PLUGGED WITH POLY–CARBONATE PLUGS.
8. STAMP IDENTIFICATION NO AT SURFACE MARKED WITH IN ⟶ ACCORDING TO TG00005 AND FRAME WITH RED COLOUR.
9. UNSPECIFIED RADII SHALL BE TAKEN AS R50.

VAR 00	REMARKS	ITEM No.	DESCRIPTION	STD	DRAWING No.	MATERIAL CODE / MATERIAL SPECN.	UNIT	UNIT WEIGHT	GS ZONE
			FORGING FOR ROTOR SHAFT (ROUGH MACHINED)		11360100051	W95413600844 / HW19476		71084 00	

CARD TYPE–3 28 → 28 → CARD TYPE–1 → 28 → CARD TYPE–2

GMS No./ C.B.O.M.– NO. 01360101026

	AGREED DEPT	NAME	SIGN	DATE
TGE		RKSHARMA	Sd–	03.08.09
EMT		SKKOHLI	Sd–	03.08.09

STATUS OF DRG

TYPE OF PRODUCT OR NAME OF CUSTOMER/PROJECT: 660 MW THDF 115/67

GRADE OF UNTOL.DIM
M/CG.–~~C/M/F~~ AA0230208
WELDING–~~A/B/C/D~~ AA0621104
GAS CUTTING–'T3'AA0621101

BHARAT HEAVY ELECTRICALS LTD. RANIPUR, HARDWAR

	NAME	SIGN	DATE
DRN	RAJPAL	–sd/	24.11.07
CHD	ASHISH	–sd/	26.11.07
APPD	J.P.MEENA	–sd/	21.12.07

NO. OF VAR 73 74

REV	DATE	ALTERED / CHECKED
02	05.08.09	ALTERED ASHOK –sd– / CHECKED JP MEENA–sd–

SUPERSEDES THE OLD DRG. UNDER THE SAME NO.
CA/NO. MTE–09–F0102

DEPT MTE
CODE 4300

SCALE 1:10

WEIGHT (KG) 71084.00

REF. TO ASSY. DRG. 01360101026

ITEM No. –

NO. OF ITEMS – 75 77

TITLE : FORGING FOR ROTOR SHAFT (ROUGH MACHINED)

CARD CODE

DRAWING NO. 11360100051 – 7 22 23 24

SHEET No. 01 No. OF SHEETS 01

A1 SIZE

THE INFORMATION ON THIS DOCUMENT IS THE PROPERTY OF BHARAT HEAVY ELECTRICALS LIMITED.
IT MUST NOT BE USED DIRECTLY OR INDIRECTLY IN ANY WAY DETRIMENTAL TO THE INTREST OF THE COMPAY

INVENTORY NO | SIGN. AND DATE | REF. DRG. NO. DSPPC/00448329 DSPPC/00448329

REV	DATE	ALTERED / CHECKED	REV	DATE	ALTERED / CHECKED

संस्थान क्रय विनिर्देश (हीप – हरिद्वार)		HW 19476
PLANT PURCHASE SPECIFICATION (HEEP - HARIDWAR)		मुख पृष्ठ PREFACE SHEET

TURBOGENERATOR SHAFT FORGING WITH DIAMETER ≤ 1300MM (Gr : 26NiCrMoV14-5)

केवल आंतरिक प्रयोग हेतु

प्रदायक को देने से पूर्व इस मुखपृष्ठ को निकाल दें ।

FOR INTERNAL USE ONLY

REMOVE THIS PREFACE BEFORE ISSUE TO SUPPLIERS.

समतुल्य मानक/सूची आदि
COMPARABLE STANDARDS / CATALOGUES ETC. : **NIL**

सुझाए/सम्भावित प्रदायक एवं श्रेणी
SUGGESTED / PROBABLE SUPPLIERS AND GRADES. : AS PER PMD

कोई अन्य जानकारी
ANY OTHER INFORMATIONS : **BASED ON TLV 9123 15 04/2007**

COPYRIGHT AND CONFIDENTIAL
The information on this documents is the property of Bharat Heavy Electrical Limited.It must not be used directly or indirectly in any way detrimental to the interest of the company

स्वत्वाधिकार एवं गोपनीय
इस प्रलेख में दी गई सूचना भारत हेवी इलेक्ट्रिकल्स की सम्पत्ति है इसका प्रत्यक्ष एवं अप्रत्यक्ष रूप से किसी भी तरह प्रयोग, जो कि कंपनी के हित में हानिकारक हो न किया जाए ।

स्वीकृति : संस्थान मानक समिति APPROVED : PLANT STANDARDS COMMITTEE			GR No 2.60
REV 04 03.11.2008	निर्माण PREPARED : MTE	जारी : मानक विभाग ISSUED : STANDARDS DIVISION	दिनांक : DATE :

जारीकर्ता एवं हस्ताक्षर SIGN & DATE

सामग्री सूची संख्या को अधिक्रमित करता है SUPERSEDES INVENTORY NO.

हस्ताक्षर एवं दिनांक SIGN & DATE 6/11/08

सामग्री सूची संख्या INVENTORY NO. P-35555

TURBOGENERATOR SHAFT FORGING WITH DAIMETER ≤ 1300MM
(Grade : 26NiCrMoV14-5)

Based on TLV 9123 15 04/2007

1.0 GENERAL:

This specification governs the quality of T.G. shaft forging of steel grade 26NiCrMoV14-5 (Material no. 1.6957).

2.0 APPLICATION:

For T.G. shafts with diameter < 1300MM.

3.0 CONDITION OF DELIVERY:

Heat-treated and machined condition as per the ordering drawing.

4.0 DIMENSION AND TOLERANCES:

Forging shall be supplied to the dimensions and tolerances as per the ordering drawing.

5.0 MANUFACTURING:

5.1 GENERAL REQUIREMENTS:

Before starting the production the manufacturer shall submit a Manufacturing and Inspection Plan (MIP) for BHEL approval.

Manufacturing and inspection sequencing plan (MIP) for forging shall constitute details of:

- Steel melting, Steel treatment, Ingot pouring
- Forging process
- Preliminary Heat-treatment
- Internal tests and inspections before Quality Heat-treatment
- Quality Heat-treatment
- Tests and Inspections after Heat-treatment
- Test certificate requirements
- Marking, Preservation and dispatch
- Test instructions for NDE examinations in detail preferably with sketches

5.2 MELTING AND FORGING:

Vacuum degassed steel with low silicon content (e.g. VCD steel) or Electro slag re-melted steel shall be used and shall be thoroughly forged. The use of any other melting method and secondary steel treatment (e.g. CAB) shall be agreed upon in advance with BHEL in each individual case.

Before heat-treatment, clocking symbols 3-6-9-12 shall be stamped on the ends of the rotor.

COPYRIGHT AND CONFIDENTIAL
The information on this documents is the property of Bharat Heavy Electrical Limited It must not be used directly or indirectly in any way detrimental to the interest of the company
स्वत्वाधिकार एवं गोपनीय
इस प्रलेख में दी गई सूचना भारत हेवी इलेक्ट्रिकल्स की सम्पत्ति है इसका प्रत्यक्ष एवं अप्रत्यक्ष रूप से किसी भी तरह प्रयोग, जो कि कंपनी के हित में हानिकारक हो न किया जाए।

				नाम NAME	दिनांक एवं हस्ताक्षर SIGNATURE & DATE
TSX	B. CHOUDHARY	6.11.08			
TGE	R.C. BAJPAI	27.10.08	अनुवादक TRANSLATED BY		
DAX	N.K. Manwani	1.11.08	निर्माणकर्ता WORKED BY	ASHISH	27/10/08
IPSC	S.K. SONKAR	01/11/08	जांचकर्ता CHECKED BY	P NATH	27/10/08
सहमत विभाग AGREED DEPTT	नाम NAME	दिनांक एवं हस्ताक्षर DATE & SIGNATURE	पर्यवेक्षणकर्ता SUPERVISED BY	JP MEENA	27/10/08

स्वीकृति : संस्थान मानक समिति
APPROVED : PLANT STANDARDS COMMITTEE

GR NO 2.60

REV 04
03.11.08

निर्माण : PREPARED : MTE
जारी : मानक विभाग ISSUED : STANDARDS DIVISION
दिनांक : DATE :

हस्ताक्षर एवं दिनांक SIGN & DATE 03/11/08
सामग्री सूची संख्या INVENTORY NO. P-3555
SUPERSEDES INVENTORY NO.
दिनांक एवं हस्ताक्षर SIGN & DATE

The clocking symbol shall be used for reference purpose in recording the position of the defect, bore eccentricity etc.

5.3 HEAT TREATMENT:

Before starting the quality heat treatment, the supplier shall submit a sketch with dimensions of heat treatment for BHEL approval. Surplus material shall be left at the transition area from body part to the journals at the location of axial core trepanning. The surplus material at transition between the body and journals at the locations of axial trepan core shall only be machined after quality heat treatment.

The rotor shaft forging shall be subjected to water quenching or water spraying. The cooling shall be continued till a temperature less than 80°C is achieved in the center of the rotor body. The duration of quenching as well as actual temperature at the end of cooling to be measured at rotor body and bearing journal and shall be recorded in test certificate. The tempering temperature shall be selected to achieve the prescribed 0.2% yield strength at the best possible toughness. However it shall not be less than 600°C. The duration of tempering as well as the controlled cooling rate are to be chosen to achieve minimum residual stresses.

Residual stresses measurement shall be carried out as per specification no. AA0850150. by a qualified measuring method (KWU-Ring Core method / ASTM E837). The residual stresses shall not exceed 60 N/mm^2 at any point on the surface. The requirement of residual stress measurement on the rotor of a particular drawing can be waived off after agreement with the purchaser if the supplier has already carried out the measurement by above method on the rotor of that drawing and results are satisfactory and manufacturing plan is established.

BHEL reserves the right to check the residual stresses of the rotor.

6.0 PROPERTIES AND TESTS:

6.1 CHEMICAL COMPOSITION IN %:

C	0.28 max	Si	0.25 max	Mn	0.40 max	P	0.010 max
S	0.010 max	Cr	1.40 – 1.80	Mo	0.30 – 0.45	Ni	3.40 – 3.80
V	0.15 max	Al total	0.025 max				

The content of trace elements such as Sn, Sb, As and Cu shall be reported in test certificate for information. Check analysis shall be carried out according to AA0850155 and recorded. Slight deviation in chemical composition is permissible only after agreement with BHEL, provided service properties are not affected.

6.2 MECHANICAL PROPERTIES

6.1.1 Tangential Specimens:

The manufacturer shall test Tangential test specimens taken from locations indicated on the drawing. The individual values of 0.2% Yield strength and tensile strength may only differ by 50 N/mm² maximum. The test rings shall not be cut free before quality heat treatment. The location of tensile and impact specimens shall be in a distance of at least 40mm from the heat-treated surfaces.

COPYRIGHT AND CONFIDENTIAL
The information on this documents is the property of Bharat Heavy Electrical Limited.It must not be used directly or indirectly in any way detrimental to the interest of the company
स्वत्वाधिकार एवं गोपनीय
इस प्रलेख में दी गई सूचना भारत हैवी इलेक्ट्रिकल्स की सम्पत्ति है इसका प्रत्यक्ष एवं अप्रत्यक्ष रूप से किसी भी तरह प्रयोग, जो कि कंपनी के हित में हानिकारक हो न किया जाए।
SUPERSEDES INVENTORY NO. सामग्री सूची संख्या को अधिक्रमित करता है
दिनांक एवं हस्ताक्षर SIGN & DATE
हस्ताक्षर एवं दिनांक SIGN & DATE 27/11/08
सामग्री सूची संख्या INVENTORY NO. P-3555

The following properties shall be achieved at room temperature:

0.2% Yield strength	730 – 830 N/mm^2
Tensile strength	1000 N/mm^2 max
% Elongation (l_o = 5d)	15% min.
% Reduction in Area	50 % min.
Impact Strength	100 J min.
(Average of 3 Charpy V-notch specimens)	

6.2.2 Axial Core:

On the bottom end (exciter end) an axial core of diameter ≥ 60 mm is to be taken out from the journal area of the shaft. The location of the axial core is shown in the order drawing. Release for boring will be authorized by BHEL after review of the test results like T1 & T2 mechanical tests, including UT & residual stress values, submitted by the manufacturer. Position and number of specimens, test temperature shall be as per latest issue of AA0850155. Following properties shall be achieved in radial direction:

0.2% Yield Strength	:	730 N/mm^2 min.
FATT	:	≤ -10 °c
Impact Strength (at +20°c)	:	100 J min.
(Avg. of 3 Charpy V-notch specimens)		

BHEL reserves the right to extend the axial core below the barrel, if required. In this case it will be based on a revised drawing.

The following properties shall be achieved in the barrel area in radial direction:

0.2% Yield Strength	:	730 N/mm^2 min.
FATT	:	≤ +10 °c
Impact Strength (at +20°c)	:	70 J min.
(Avg. of 3 Charpy V-notch specimens)		

The axial core shall be clearly marked, so that its original position can be easily identified with respect to the shaft. The stamp of the manufacturer's authorized inspector close to the identification number shall confirm traceability of the trepanned core to the forging.

For any reason, if the axial core is to be taken from the input end i.e. top end (turbine end), the drawing will no longer be valid. The sampling of trepanned core then will be carried out according to new drawing.

6.2.3 Radial Cores:

BHEL reserves the right to take one or more radial cores in special cases in lieu of the axial core or in addition. The position of the cores will be determined individually.

6.2.4 Reduced Fracture Deformations:

If reduced values of the fracture deformations are achieved, the manufacturer has to prove that these are caused by local impurities only.

COPYRIGHT AND CONFIDENTIAL
The information on this documents is the property of Bharat Heavy Electrical Limited.It must not be used directly or indirectly in any way detrimental to the interest of the company
स्वत्वाधिकार एवं गोपनीय
इस प्रलेख में दी गई सूचना भारत हेवी इलेक्ट्रिकल्स की सम्पत्ति है इसका प्रयोग एवं अप्रत्यक्ष रूप से किसी भी तरह प्रयोग, जो कि कंपनी के हित में हानिकारक हो न किया जाए।
SUPERSEDES INVENTORY NO.
सामग्री सूची संख्या को अधिक्रमित करता है
दिनांक एवं हस्ताक्षर SIGN & DATE
हस्ताक्षर एवं दिनांक SIGN & DATE
सामग्री सूची संख्या INVENTORY NO.
P-3555

दिनांक एवं हस्ताक्षर SIGN & DATE
सामग्री सूची संख्या को अधिक्रमित करता है SUPERSEDES INVENTORY NO.
COPYRIGHT AND CONFIDENTIAL
The information on this documents is the property of Bharat Heavy Electrical Limited.It must not be used directly or indirectly in any way detrimental to the interest of the company
स्वत्वाधिकार एवं गोपनीय
इस प्रलेख में दी गई सूचना भारत हेवी इलेक्ट्रिकल्स की सम्पत्ति है इसका प्रत्यक्ष एवं अप्रत्यक्ष रूप से किसी भी तरह प्रयोग, जो कि कंपनी के हित में हानिकारक हो न किया जाए।

6.2.5 Release for Further Manufacturing:

On receipt of all test results, BHEL will decide further course of action for the shaft.

6.3 NON DESTRUCTIVE EXAMINATION (Outer & Inner Quality):

6.3.1 SCOPE OF INSPECTION

6.3.1.1 Ultrasonic Test :

Ultrasonic testing and acceptance criteria shall be as per the specification No. AA0850106

6.3.1.2 Magnetic Particle inspection:

Magnetic particle inspection of the axial bore and of radial bore, if any, shall be carried out. Magnetic particle test results shall be evaluated as per AA0850106.

6.4 DIMENSIONAL MEASUREMENT:

The dimensions and tolerances given in the ordering drawing shall be applicable. The supplier shall carry out the following dimensional inspection in delivery condition:

- All outer diameters and outer length of the rotor, surface roughness of the journal area with limited reference value and actual value are to be provided.
- Length, diameter and surface roughness of the axial bore is to be measured according to Annexure -01 at 100mm intervals.

6.5 MAGNETIC PROPERTIES:

The magnetic properties shall be determined by the supplier. The rod to be tested shall be taken from one of the tangential rings. The following values shall be achieved:

Field Strength	10,000	20,000	30,000	A/m
Minimum	1.78	1.92	1.97	Tesla

7.0 MARKING:

The supplier shall mark each shaft with the identification number. This is to be punched on the front face of the shaft end (as marked in the respective drawing), at reference clock position no. 12 and is to be bordered with oil paint. This shall be confirmed with authorized work inspector's stamp next to the identification number. .

8.0 DOCUMENTATION:

The supplier shall furnish 4 copies of test certificates 3.1B according to EN10204, unless and otherwise stated on the order. The test certificates shall bear the following information:

BHEL Reference:

a) Identification number

b) Purchase Order No.

c) Drawing number

d) Specification number

Supplier's Reference :

a) Name of supplier

b) Material Identification

c) Melt Number & melting process

d) Details of steel ingot & forging process:
Number of forgings in the ingot, Dimension of ingot , ingot weight, forging process and forging reduction ratio (F_{max}/F_{end} at the largest diameter)

e) Details of heat treatment, method of cooling, actual time and temperature sequence, soaking time, heating and cooling rate including all reheat treatment are to be quoted.

Test Results:

a) Melt analysis along with tramp elements.

b) Mechanical test results (all individual values & test piece locations are to be indicated).

c) Ultrasonic examination results according to AA 0850106.

d) Results of the MPI of axial and if applicable radial bores according to AA0850106.

e) Result of residual stress measurement, if carried out.

f) Result of magnetic properties

g) Dimension report

h) Deviation reports with approval of purchaser , if applicable

9.0 CLEARANCE FOR DELIVERY :

The entire results of test performed are deciding factors for the clearance of the delivery. BHEL shall evaluate the total results with respect to intended operational requirements for the forging and judge accordingly the permissibility of deviations (if any) of the properties of the item required.

The clearance does not relieve the manufacturer from the responsibility for hidden impermissible defects, which may be found later on.

10.0 DEVIATIONS :

Deviations from this Purchase Specification, which arise during manufacturing, may be submitted to BHEL in writing, giving full details of the deviation. Acceptance of concession request will be at the sole discretion of BHEL.

11.0 PACKING & DISPATCH:

Before dispatch, the forging shall be suitably packed to prevent corrosion and damage during transit.

Steady rest portions shall be properly protected with anticorrosive compound. The axial and/or radial bores shall be plugged at supplier end as per the ordering drawing requirement of BHEL

12.0 CROSS REFERRED STANDARDS:

1. AA0850150 2. AA0850155 3. AA0850106 4. ASTM E837 5. EN10204.

COPYRIGHT AND CONFIDENTIAL
The information on this documents is the property of Bharat Heavy Electrical Limited.It must not be used directly or indirectly in any way detrimental to the interest of the company
स्वत्वाधिकार एवं गोपनीय
इस प्रलेख में दी गई सूचना भारत हेवी इलेक्ट्रिकल्स की सम्पत्ति है इसका प्रत्यक्ष एवं अप्रत्यक्ष रूप से किसी भी तरह प्रयोग, जो कि कंपनी के हित में हानिकारक हो न किया जाए।
दिनांक एवं हस्ताक्षर SIGN & DATE
SUPERSEDES INVENTORY NO.
सामग्री सूची संख्या को अधिक्रमित करता है
हस्ताक्षर एवं दिनांक SIGN & DATE 6/11/08
सामग्री सूची संख्या INVENTORY NO. P-3555

ANNEXURE-01

Steam Turbines/Turbogenerators
Test Record

Rotor body
Axial hole

Kennwort: / Job Name:	Auftrags-Nr.: / Order-No.:	T/G-Nr.: / T/G-No.:	Blatt-Nr.: / Page-No.:
Material-Nr.: / Material-No.:	Baugr.-Nr.: / Des.Gr.-No.:	Id.-Nr.: / Id.-No.:	
Zeichn.-Nr.: / DWG-No.:	Index: / Issue: Position: / Position:	Typ: / Type:	

☐ ES/EE ☐ TS/TE

Maß Dim.	Sollmaß Nom.	Istmaß Act. Dimension
L_1		
L_2		
R		
B		
Rz		

A = 100 / ____

$Z = \frac{L_1}{A} = ____ = ____$

Maß Dim.	Sollmaß Nom.	Istmaß Act. Dimension
Ø Da		
Ø D1		
Ø D2		
Ø D3		
Ø D4		
Ø D5		
Ø D6		
Ø D7		
Ø D8		
Ø D9		
Ø D10		
Ø D11		
Ø D12		
Ø D13		
Ø D14		
Ø D15		
Ø D16		
Ø D17		
Ø D18		
Ø D19		
Ø D20		
Ø D21		
Ø D22		
Ø D23		
Ø D24		
Ø D25		
Ø De		

Axialbohrungsanfang
Axial hole begin

Ausf. 1 ☐
Type 1

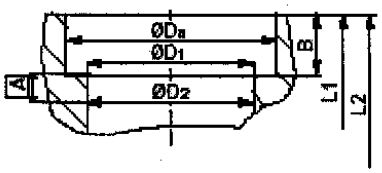

Ausf. 2 ☐
Type 2

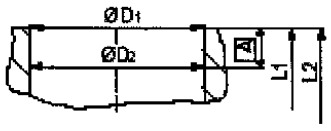

Axialbohrungsende
Axial hole end

Ausf. 1 ☐
Type 1

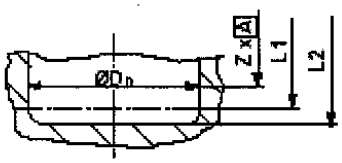

Ausf. 2 ☐
Type 2

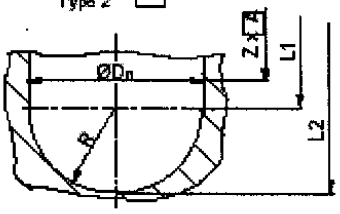

Ausf. 3 ☐
Type 3

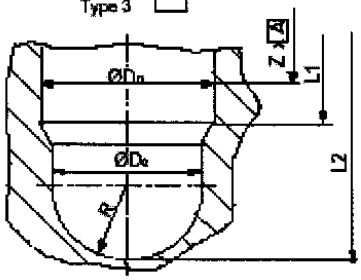

Ausf. 4 ☐
Type 4

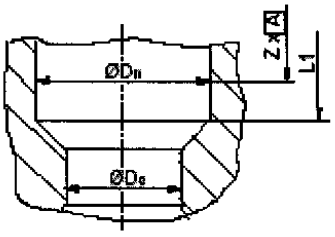

Legende:
Legende

L_1 = Länge Axialbohrung bis Anfand Auslauf/ Length axial hole up to outflow
L_2 = Ges. Länge der Axialbohrung/ Total length axial hole
B = Tiefe Flachbodenbohrung/ Deepness flat- bottom hole
Ø Da = Durchmesser Flachbodenbohrung/ Diameter flat- bottom hole
Ø D1 - Ø Da =Meßstelle Durchm. der Axialb./ Gage points of dia. of the axial hole
Ø Dn =Letzte Meßstelle Durchm. der Axialb./ Last gage point of dia. of the axial hole
Z = Anzahl der Meßstellen/ Number of gage points
A =Abstand der Meßstellen/ Distance of gage points
(Im Bedarfsfall erhöhen und eintragen!/ In case of need increase and enter!)
Rz = Rauhtiefe/Roughness

COPYRIGHT AND CONFIDENTIAL
The information on this document is the property of Bharat Heavy Electrical Limited.It must not be used directly or indirectly in any way detrimental to the interest of the company

स्वत्वाधिकार एवं गोपनीय
इस प्रलेख में दी गई सूचना भारत हैवी इलेक्ट्रिकल्स की सम्पत्ति है इसका प्रत्यक्ष एवं अप्रत्यक्ष रूप से किसी भी तरह प्रयोग, जो कि कंपनी के हित में हानिकारक हो न किया जाए।

हस्ताक्षर एवं दिनांक SIGN & DATE

सामग्री सूची संख्या INVENTORY NO. P-3555

ANNEXURE-02

Plugs for trepanning bores in turbine and generator rotors.

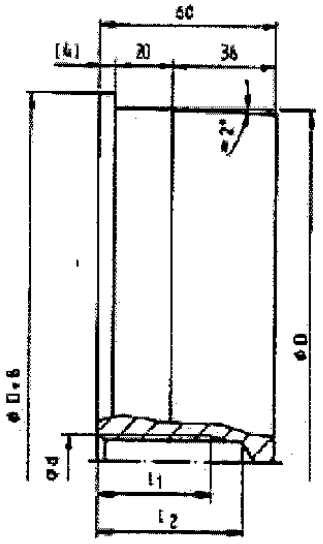

⌀ D (Paßmaß Stopfen) = Bohrungsdurchmesser Welle + 0,25 Tol. + 0,05
⌀ D (fit of plug) = bore diameter of rotor + 0,25 tolerance + 0,05

Gewindemaße thread dimensions	⌀ d	l_1	l_2
⌀ D ≤ 60 mm	M 16	31	40 +1
⌀ D > 60 - ≤ 130 mm	M 20	31	42 +1
⌀ D > 130 mm	M 27	31	44 +2

COPYRIGHT AND CONFIDENTIAL
The information on this documents is the property of Bharat Heavy Electrical Limited.It must not be used directly or indirectly in any way detrimental to the interest of the company

स्वत्वाधिकार एवं गोपनीय
इस प्रलेख में दी गई सूचना भारत हेवी इलेक्ट्रिकल्स की सम्पत्ति है इसका प्रयोग एवं अप्रत्यक्ष रूप से किसी भी तरह प्रयोग, जो कि कंपनी के हित में हानिकारक हो न किया जाए।

Residual Stress Measurement on Turbine and Generator shafts

1. Residual Stress Condition

In the Course of heat treatment processes of turbine and generator shafts compressive residual stresses are induced in near surface areas. They are matched by tensile residual stresses in the interior. As turbine and generator shafts always undergo operational tensile stress, the residual stresses remaining after the heat treatment process are unfavorable. Therefore try to reduce residual Stresses as far as possible.

BHEL delivery specifications do not define the cooling down rates from tempering temperature conditions. Instead of this it has been specified that the compressive residual stresses must not exceed 60 N/mm^2 at any place on the surface. This has to be proved by Residual Stress Measurements performed by the manufacturer.

2. Residual Stress measurements

2.1 Residual Stress measurements are to be performed by the ring-core-method. To assure a conforming assessment of the results by the manufacturer and BHEL, the residual Stresses have to be calculated for the depth region from 2 to 4 mm using following formulas:

$$\sigma^{tan} = \frac{\varepsilon^{tan}(2mm) - \varepsilon^{tan}(4mm)}{2.36} + \frac{\varepsilon^{ax}(2mm) - \varepsilon^{ax}(4mm)}{11.2}$$

$$\sigma^{ax} = \frac{\varepsilon^{ax}(2mm) - \varepsilon^{ax}(4mm)}{2.36} + \frac{\varepsilon^{tan}(2mm) - \varepsilon^{tan}(4mm)}{11.2}$$

These formulas are valid for 26NiCrMoV *145* **and** ring core of 14 mm in diameter. Stresses **(σ)** are given in N/mm^2, strains **(ε)** in $\mu m/m$.

2.2 Stress measurements have to be performed after the last tempering treatment on the contour as tempered. The appropriate location of the three measuring Points are marked in annex 1 and 2. Measurements have to be performed at the Points specified, being offset by 120° on circumference.

COPYRIGHT AND CONFIDENTIAL
The Information on this document is the property of BHARAT HEAVY ELECTRICALS LIMITED
It must not be used directly or Indirectly in any way detrimental to the Interest of the company.

2.3 If measurements are to be performed on the contour as delivered, contact BHEL in any case *to* ensure that the cutting allowance available will suffice. Should the occasion arise, certain locations can be specified by BHEL.

2.4 Repeat the Stress measurernents, if re-heat treatment or re-tempering is required.

2.5 In case, the relevant Stress condition cannot be determined unambiguously, BHEL reserves the right to define additional measuring Points.

2.6 An immediate and close exchange of experience regarding the measured values between manufacturer and BHEL is necessary.

Annexure-1

Customer **Drawing no.**

Order no. **Identification no:**

Subject **Material:**

Heat treatment

Residual stress measurement
Test method: ring-core-method

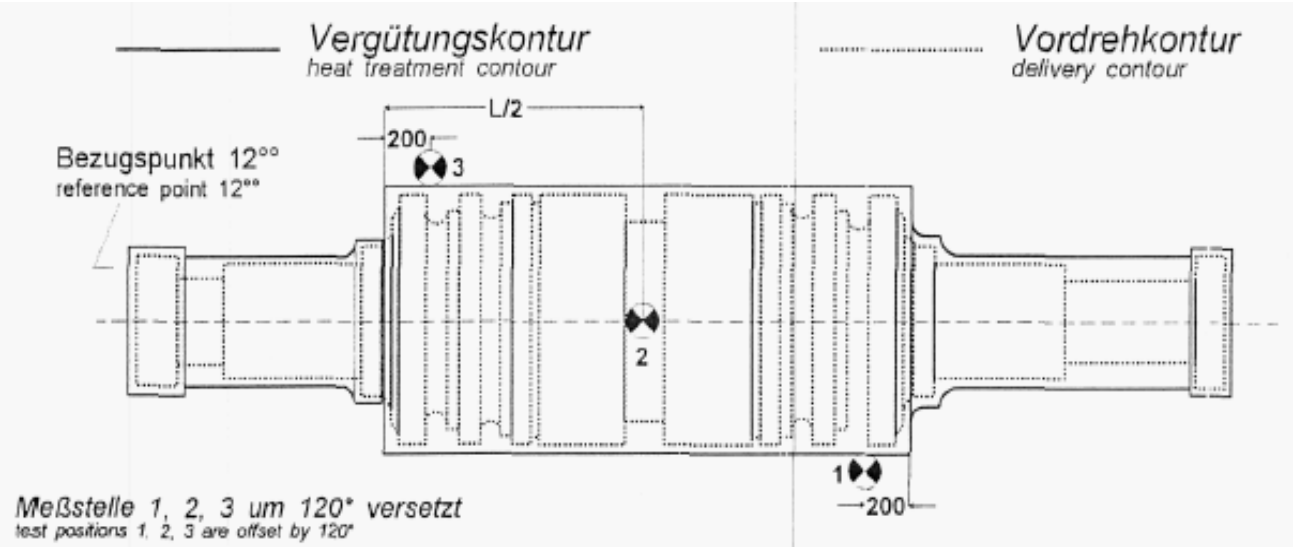

	Heat treatment contour			Delivery contour			
Test position	**1**	**2**	**3**	**1**	**2**	**3**	
Reference point							**Time pos.**
specification							**N/mm²**
S_{tg}							**N/mm²**
S_{ax}							**N/mm²**

Date **Company**
Dept.

CORPORATE STANDARD

Annexure-2

Customer **Drawing no.**

Order no. **Identification no:**

Subject **Material:**

Heat treatment

Residual stress measurement
Test method: ring-core-method

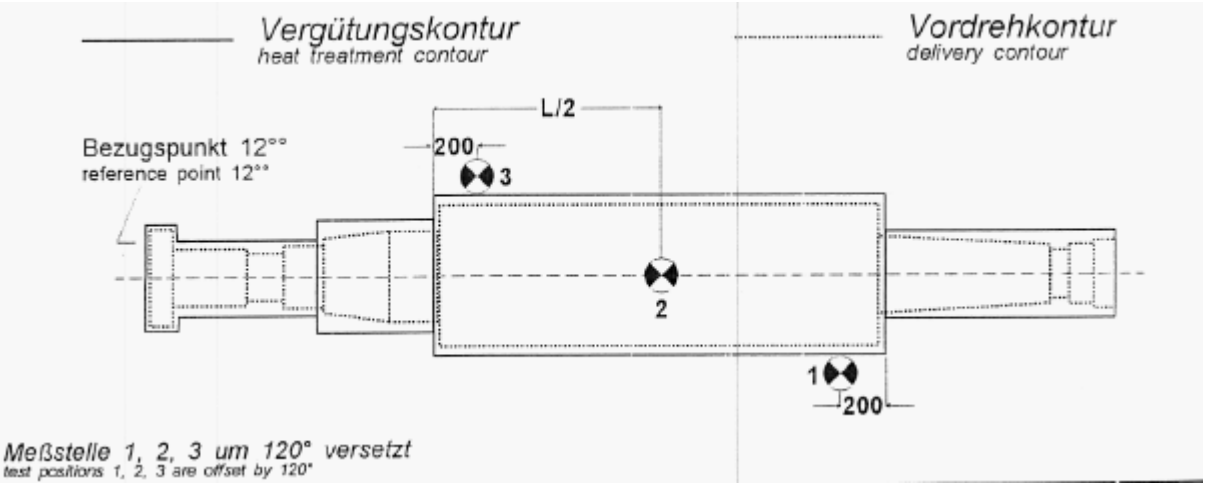

	Heat treatment contour			Delivery contour			
Test position	**1**	**2**	**3**	**1**	**2**	**3**	
Reference point							**Time pos.**
specification							**N/mm²**
S_{tg}							**N/mm²**
S_{ax}							**N/mm²**

Date **Company**
Dept.

TESTING OF THE AXIAL AND TANGENTIAL CORES FROM SHAFTS AT THE SUPPLIER

1. Scope

This testing procedure is valid for all generator and turbine shafts with axial / tangential cores.

2. Referenced documents

DIN 50125, DIN EN 10045-1

3. Inspection personnel

Inspections and correction of the punching is only allowed for qualified and named personnel.

4. Axial core

4.1 Time for taking

If there are during the internal UT at the supplier after quality heat treatment in the area of axial cores no indications and other deviations the tangential core can be taken.
At shafts with before tested tangential cores the fulfilment of the requiremnets is an additional for taking.

4.2 Taking

The location of the axial core in the shaft and the diameter or the length is given in the order drawing. At E- turbines the axial cores are to be taken from the HP- and LP- part.
The diameter of the core has to be min. 60 mm to realize a radial specimen location.

4.3 Splitting up

The splitting up of the axial core and the location of the specimens are given in attachment 1. The splitting up at shafts without an over forging (e.g. generator shafts, LP- shafts) begins 200 mm from the body end, applied to the heat treatment contour. Shafts with an over forging (e.g. HP-, MP- shafts) will be splitted up directly from the body end.

The location of the axial core in the shaft applied to the heat treatment dimensions, the distance to the body end and the beginning of the splitting up are to be confirmed in the dimension sketch.

4.4 Inspections and tests

COPYRIGHT AND CONFIDENTIAL
The Information on this document is the property of BHARAT HEAVY ELECTRICALS LIMITED
It must not be used directly or Indirectly in any way detrimental to the Interest of the company.

4.4.1 Tensile test

At a tensile test specimen acc. to *DIN 50125, type B* (B6 x 30) shall be tested at room temperature: RP 0.2 [N/mm²], Rm [N/mm²], A5 [%], Z [%].

4.4.2 Notched-bar impact test

The notched-bar impact test is to be carried out at Charpy-V specimens acc. to *DIN EN 10045- 1.* With the 8 Charpy-V-specimens will be determined the FATT at 50% ductile crack and the FATT at 100% ductile crack.

The testing temperatures are given in attachment 2. One temperature can be choosen free for better confirmation of the upper shelf or the FATT. The single results are to be shown in an AV-T diagramm.

4.4.3 Chemical composition

At the specimens to be taken for analysis, the elements required in the material specification, including the trace elements, are determined quantitatively.

4.4.4 Approval with the purchaser

The purchaser carries out a reduced approval. After the testing of the supplier specimens one tensile specimen and two Charpy-V specimens (attachment 1) are to be prepared for testing in the connection with the UT- approval. The testing temperatures of the both Charpy-V specimens are given in attachment 2.

4.4.5 Storage/ Saving

The remainder of the axial core and of the tested specimens are to be clearly marked (to the body side) and are to be stored at the supplier for one year.

5. Tangential core

5.1 Time for taking

If there are during the internal UT at the supplier after quality heat treatment in the area of the tangential core no indications and other deviations the tangential core can be taken.

5.2 Taking

The location of the tangential core is given in the order drawing. The diameter of the core has to be min. 26 mm for taking two Charpy- V specimens lying one on top of the other.

5.3 Splitting up

The splitting up of the tangential core and the location of the specimens are given in attachment 3.

5.4 Inspections and tests

5.4.1 Tensile test

At a tensile test specimen acc. to *DIN 50125, type B4* (B6 x 30) shall be tested at room temperature: RP 0.2 [N/mm²], Rm [N/mm²], A5 [%], Z [%].

5.4.2 Notched-bar impact test

The notched-bar impact test is to be carried out at Charpy-V specimens acc. to *DIN EN 10045-1.* With the 8 Charpy-V-specimens will be determined the FATT at 50% ductile crack and the FATT at 100% ductile crack.

The testing temperatures are given in attachment 4. One temperature can be choosen free for better confirmation of the upper shelf or the FATT. The single results are to be shown in an AV-T diagramm.

5.4.3 Storage/ Saving

The remainder of the tangential core and of the tested specimens are to be clearly marked and are to be stored at the supplier for one year.

6. Deviations

Any deviation has to be reported by the purchaser immediatly using the deviation report of the technical purchasing specification.

7. Results and releases

The results of the tests, including the AV-T- diagram with the FATT, are to be reported immediatly by the purchaser. The machining can continue, if all requirements are fulfiled.

The official release will give after the approval in presence of the purchaser or representative.

CORPORATE STANDARD

Annexure-1

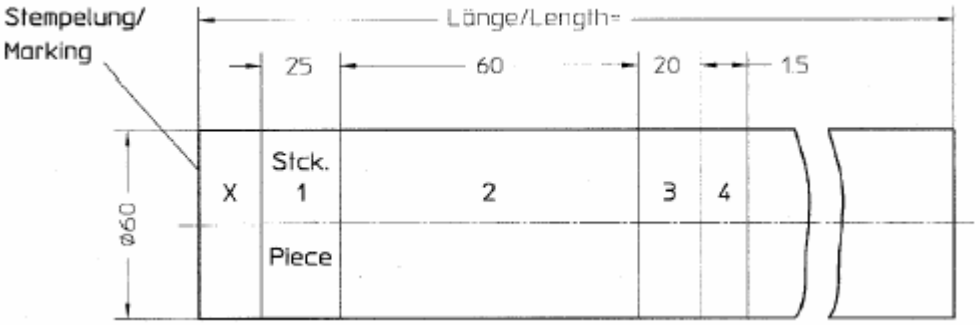

shaft without prolongation

A …….mm long section has been taken out X mm before test piece No.1 to reach the required distance of 200mm (measured from the body)

shaft with prolongation

Splitting up with piece 1

Piece 1,4 Piece 2,3

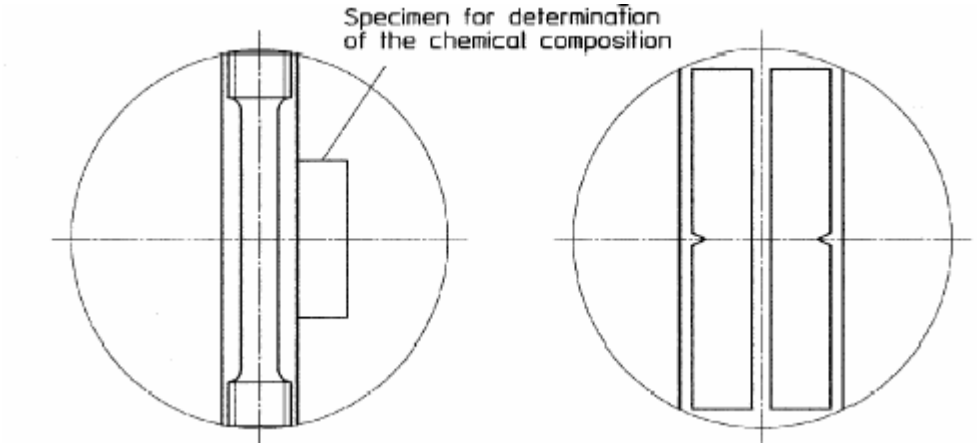

Supplier Testing

1 Tensile test specimen B6x30 acc. to DIN50125……./1

Supplier Testing

8 Charpy-V-notch specimens acc. to EN 10045-1……/2.1-2.8

Testing together with the purchaser

1 Tensile test specimen B6x30 acc. to DIN50125……/4

Testing together with the purchaser

2 Charpy-V-notch specimens acc. to EN 10045-1……../3.1-3.2

Annexure-2

Testing temperatures for the axial core inspection

Material	30 CrMoNiV 511	26 NiCrMoV 14 5	26 NiCrMoV 14 5	23 CrMoNiWV 8 8	23 CrMoNiWV 8 8	23 CrMoNiWV 8 8	X12CrMoWVNbN 1011
Design group	HP,IP,K - rotor forgings	Ge-rotor forging	LP-rotor forging	HP,IP,K - rotor forgings	E-rotor forging HP-part	E-rotor forging LP-part	HP-, IP- rotor forgings
Specification	FATT <= 80°C 3 specimens at 80°C	FATT <= -10°C 3 specimens at RT	FATT <= -30°C 3 specimens at RT	FATT <=50°C 3 specimens at 50°C	FATT <=50°C 3 specimens at RT	FATT <=25°C 3 specimens at RT	FATT for information 3 specimens at RT
Testing temperature	20°C 40°C 60°C 80°C (FA TT 3 specimens) 100°C 1 testing at any temparature	- 80°C - 60°C - 40°C - 10°C FATT 20°C (3 specimens) 1 testing at any temparature	- 100°C - 70°C - 50°C - 30°C FATT 20°C (3 specimens) 1 testing at any temparature	- 20°C 0°C 20°C 50°C (FATT 3 specimens) 80°C 1 testing at any temparature	-20°C 0°C 20°C (3 specimens) 50°C FATT 80°C 1 testing at any temparature	0°C 10°C 20°C (3 specimens) 25°C FATT 40°C 1 testing at any temparature	-20°C 0°C 20°C (3 specimens) 40°C 80°C 1 testing at any temparature
Inspection	2 specimens at 80°C	2 specimens at 20°C	2 specimens at 20°C	2 specimens at 20°C	2 specimens at 20°C	2 specimens at 20°C	2 specimens at 20°C

Annexure-3

Quality heat treatment
Diameter D:

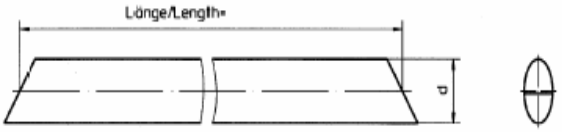

Tangential core marking parallel to the rotor forging axis

Remaining core has to be marked with the identification number

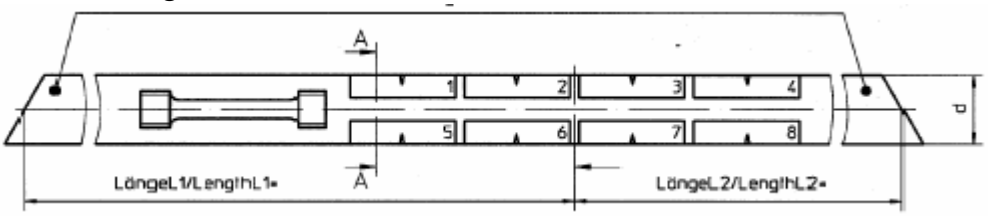

1 Tensile test specimen B10X50 acc. To DIN50125
8 Charpy-V-notch specimens acc. To EN 10045-1

A-A

Notch of specimen parallel to tangential core marking

CORPORATE STANDARD

Annexure-4

Testing temperatures for the tangential core inspection			
Material	23 CrMoNiWV 8 8	26 NiCrMoV 14 5	26 NiCrMoV 14 5
Design group	E- rotor forging	LP- rotor forging	LP- rotor forging
Specification	Tangential core FATT δ 45°C 3 specimens at 20°C	Tangential core ε 200 mm from outside FATT δ - 20°C 3 specimens at 20°C	Tangential core ε 300 mm from outside FATT δ 0°C 3 specimens at 20°C
Testing temperature	- 20°C 20°C (3 specimens) 45°C (FATT) 60°C 80°C (100% ZB) 1 testing at any temperature	20°C (3 specimens) 0°C - 20°C (FATT) - 40°C - 60°C 1 testing at any temperature	20°C (3 specimens) 0°C (FATT) - 20°C - 40°C - 60°C 1 testing at any temperature

Non Destructive Examination of Turbine & Generator Shafts

List of Contents

Page

1	**General**	**2**
1.1	Scope of Application	2
1.2	Purpose of Examination	2
1.3	Certificate of Examiners	2
2	**Applicable Standards**	**2**
3	**Preparation of Forging**	**2**
4	**Testing of UT-Equipment**	**2**
4.1	UT-Instrument	2
4.2	Probes	3
4.3	Check of Testing Equipment	3
4.4	Calibration of Testing Instrument	3
4.5	Couplant	3
5	**Test Planning**	**3**
6	**Execution of Examination**	**4**
6.1	Scope of Examination	4/5
6.2	Speed of Testing	5
7	**Special Features due to the Applied Examination Technique**	**5**
7.1	Plexiglas-adapter- wedges	5
8	**Description of Indications**	**5**
8.1	Flaw Echo Height	5
8.2	Flaw Echo Shape	5/6
8.3	Dynamic Characteristic, Extent of Indications	6
8.4	Dependence of frequency	6
8.5	Back Wall Echo drop ≥ 3 dB	6
8.6	Limit of the Flaw Detection sensitivity	6
9	**Recording- and Decision Criteria's**	**6/7**
10	**Surface Crack Examination of the cross-section transitions**	**7**
11	**Surface Crack Examination of the axial hole bore**	**7**
12	**Reporting**	**7/8/9**
	Figure 1 and Figure 2	**10**
	Table 1 and Table 2	**11**
	Table 3 and Table 4	**12**
	2 Enclosure	

COPYRIGHT AND CONFIDENTIAL
The Information on this document is the property of BHARAT HEAVY ELECTRICALS LIMITED
It must not be used directly or Indirectly in any way detrimental to the Interest of the company.

1 General

1.1 Scope of Application

This test procedure is applicable for the manual ultrasonic examination and surface crack examination (MT) of free forgings for turbine and generator shafts by the supplier. It may also be used up to the preparation of a specific test instruction for automated UT-Examination for such examinations.

It determines the conditions for UT-examination of forging items after machining in as simple as possible contour condition with body surfaces parallel to the axis. The last heat treatment, which determines the mechanical properties must already have been done. If a retempering is needed, then it must be tested by UT for minimum all recordable indications to 100%. All surface examinations must be repeated. The user must first create an equipment-specific procedure before the test equipment is qualified by both the user and BHEL. The test procedure must be approved by BHEL.

1.2 Purpose of Examination

The purpose of examination is to check as much as possible of the volume of the shaft under consideration of geometry and labour consumption for flaws resulting from the manufacturing process. It is aimed at finding flaws through to the core area of the shaft with highest detection sensitivity (see para 9 "recording- and decision criteria"). Furthermore cross-section transitions and the axial boring of the shafts are to be checked for surface crack examination (MT).

1.3 Certificate of Examiners

The forgings have to be tested by experienced and level II certified NDT-personnel (UT/MT) according to EN 473 or ASNT SNT-TC-1A. A current list of certified NDT-personnel according to the required certification shall be sent to BHEL.

2 Applicable Standards

SEP 1923, EN 12223, EN 27963, EN 10204, EN 10 228-1, EN 12668-1

3 Preparation of Forging

The examination surface of the forging shall be according to order drawing (Ra < 20 µm), in order to get a coupling of probes on the shaft which is as perfect as possible.

4 Testing of UT Equipment

4.1 UT-Instrument

UT instrument deployed for this examination shall be in accordance with the relevant standards and rules (DIN 54 126). They shall be of impulse-echo type and with the aid of a gain controller, adjustable in decibel (dB), measurements of echo relationship shall be rendered possible with ≤ 1 dB accuracy. In the working range of the applied equipment sensitivity the amplifier shall have no threshold and shall show no saturation. The testing ranges shall overlap, whereby the time base shall be linear adjustable with an accuracy of < 2% of testing range.

GS-1204

A regular inspection and maintenance of the instruments at least once a year must be proved.

4.2 Probes

The testing probes will generally be used with straight-longitudinal waves (e.g. B2S, B4S, B5S, SEB4H0°) and angle-transversal waves (e.g. WB4 5-2N, and WB70-2N), therefore the selection of probes conforms to the geometrical conditions of the shaft.

In the application of the probes it must be taken into consideration that probes shall be adapted to the contour of the surface of the shaft in sound direction or small probes shall be used. This is always the case, when the curvature of the surface of the shaft is $R \leq A^2 / 4$. Therefore A is the length of the coupling area of the probe in bend direction.

4.3 Check of Testing Equipment

For equipment calibration and for control of equipment function and probes calibration blocks 1 and 2 according to EN 12223 and EN 27963 or other calibration blocks shall be available.

4.4 Calibration of Testing Instrument

The calibration of the time base range shall be done with the aid of calibration blocks according to EN 12223 or EN 27963 respectively or on the test piece, where at least two reference echo's with known sound paths shall be used.

4.5 Couplant

The couplant shall wet the surface of the shaft enough to ensure a perfect coupling on the test surface. The applied couplant must not cause any corrosive damage.

5 Test Planning

The identification number must be stamped on the face of the shaft end according to the order drawing. The marking field must be placed in the original position of the shaft after any subsequent machining. In the delivery condition of the shaft the marking shall be framed with oil paint. The correctness of the identification shall be certified by the responsible factory quality representative by hard stamping of his sign in the identification area.

Before inspection, the inspector must use the relevant drawings of the shaft to find out the position of the axial bore holes which will be drilled later, as well as the geometrical contour, dimensions etc. In addition, the inside area / volume of the area for the axial bore holes must be checked by UT before drilling. The order drawing gives a reference base groove area for axial 0-point to be used during ultrasonic testing. The reference point is the position on the face of the shaft end as shown in the drawing. There must be a stamp field on the face of the shaft before the test start. However, at this point of test, the groove should not have been machined. After machining the groove area on the shaft, the marking field must be transferred to the identical circumferential position. In addition, if a reference bore needs to be drilled according to the drawing, then it must be transferred as a reference point in the identical circumferential positio. The excess length during the ultrasonic test must also be tested.

Indications from detection limit in the bore hole volume must be recorded.

CS-1204

It should be possible to turn the shaft during the examination. In case of recordable indications, the shaft must be rotatable.

6 Execution of Examination

6.1 Scope of Examination

Sound directions (according to SEP 1923) have to be applied as follows:

A5 Sound attenuation measurement according to SEP 1923 in radial direction over the whole length of the shaft, therefore the axial distance between two measurement points should not be more than 1000 mm. In the case of the attenuation measurement, irregularities which require further investigations can occur. For example, can probe- and/or material dependent attenuation values be identical and/or lower with the higher frequency (e.g. 5 MHz) as with the lower frequency (e.g. 4 MHz). In such cases possibly further investigations of the frequency spectrums of the probes must be carried out. Narrow-band probes whose center frequency fits as close to the nominal frequency should be used. This should if possible be engaged by a probe particular frequency analysis. The Specimen number of the used probes is to be recorded in the UT record.

A3 Examination of the total surface of the shaft in radial direction with the probe B2S. Exceptionally the probe B4S with the 4 MHz - frequency may be used, when spurious echo's (phantom echo's) or insufficient detection sensitivity limit (> 1 mm FBH) occurs by using the probe B2S.

A4 Examination in axial direction from all face areas and sections with the probes B2S and B4S. The maximum beam path for the detection sensitivity limit of 3,0 mm FBH (flat bottom hole) in the direction A4 is to be reported.

A7 Examination of the total circumferential surface of the shaft in both circumference direction (cw and ccw) with angles of incidence of 7°, 14° and 21° for the probe B2S.
In case of spurious echo's (phantom echo's), the probe B4S with corresponding angles of incidence of 3.5°, 7°, 10.5°, 14°, 17.5°, 21° and 24.5° is to be taken into consideration for this circumferential direction (A7).
From experience it is known that with the application of B2S-probe spurious echo's occur only by the angles of incidence of 0°÷14°.

A7 Examination of the total circumferential surface of the shaft in both circumference direction with an angle of incidence of 45° (WB45-2 N).

A8 Examination of the body in near-surface range up to a depth of about 150 mm (for generator shafts up to 250mm depth because of the coil slots) in axial direction with an angle of incidence of 70° (WB70-2N).

A9 Examination of body in near- surface range up to a depth of about 150 mm in radial direction with the probe SEB4H0° in case the detection sensitivity limit in the volume range near the back wall echo will not be ≤ 1 mm FBH when tested in radial direction (A3).

The prescribed directions of incidence are presented in **Figure 1**.
The above mentioned sound directions are valid for shafts with parallel surfaces in axial direction only.

CS-1204

Examination of cross-section transitions:

The cross-section transitions in the meaning of this procedure are areas where the diameters differ at quality heat treatment ≥ 200mm.
All cross-section transitions are to be tested to 100% from the accessible surface in radial-axial direction (A8) with angles of incidence of 70° (WB7 0-2N) according to **figure 2**. It is sufficient to test the volume up to the middle of the shaft from one side only. There is no need of this examination, if the detection limit is verified ≤ 3 mm FBH from the axial direction (A4) for the corresponding crossing.

6.2 Speed of Testing

For visual screen monitoring the testing speed shall not exceed 100 mm/s.

7 Special Features due to the Applied Examination Technique

7.1 Plexiglas-Adapter- Wedges

For acoustic incidence of longitudinal waves in radial-tangential sound direction according to the above mentioned angles plexiglas adapter-wedges may be used. The resulting occurrence of loss of sound energy may reduce the detection sensitivity limit. To minimize losses and disturbing spurious echo's it is taken care that the thickness of plexiglas-adapter- wedges between transducer and testing surface shall be as small as possible.

According to experience loss of sound energy of 4 dB arises by plexiglas-adapter- wedges with 5 mm thickness and 0°-angle of incidence. It is imp ortant that all other used plexiglas-adapter wedges shall have the same thickness.

8 Description of Indications

Indications from defects inside the material must be characterized by their echo height and shape, by their dynamic characteristics and if necessary by their frequency dependence. Furthermore, indications in connection with back wall echo drop ≥ 3 dB are to be recorded as well as the detection sensitivity limit for the largest sound path.

8.1 Flaw Echo Height

The evaluation of indications on the basis of their echo amplitude will be done according to the AVG (DGS)-method, whereby the equivalent reflector size should be recorded as equivalent flat bottom hole (FBH) in mm.

8.2 Flaw Echo Shape

The indications are characterized according to the following echo shapes:

single echo (in German Einzelecho)	EE
many single echo's (in German viele Einzelechos)	VE
group echo resolvable (in German Gruppenecho auflösbar)	GA
group echo not resolvable (in German Gruppenecho nicht auflösbar)	GN
ring zone	RZ
grass (structural indications)	GR

CS-1204

The max. FBH-size in an area of group indications (GA`s and GN´s) must be always determined by using the max. echo peak.
The screen patterns of the relevant echo shapes are shown in **Table 3**.

8.3 Dynamic Characteristic, Extension of Indications

The determination of the extent of single indications has to be done according to the half amplitude method. The sound field characteristics of the probes are to be taken into consideration. In the event that during the determination of the half amplitude extension of the flaw a change in the beam path is detected, the existence of a flaw with a plane angular orientation has to be assumed and recorded.

If the existence of angular or eccentric oriented flaws is suspected, the echo amplitude is to be recorded after optimising the angles of incidence. The following shall be taken into account:

a) The reflectivity of an indication in case of radial/ tangential direction from 0° |21° (A3, A7) according to table 1goes through a maximum, no additional examinations are necessary.
b) If an increase goes in reflectivity of the indication in radial/ tangential direction from 0°,21° (A3, A7), according to table 1, is noted, then additional examinations with sound angles 28° and 35° shall be performed independent of the recor dability of the indication.
c) If recordable indications from direction A7 45° (cw/ccw) in the "long sound path" are detected, they must be tested and recorded additiuonal in " short sound path" with the probes VS 60 or VS 70 and if necessary with MWB60 or MWB70. The choice of the above probes is dependent on the depth of indications.

8.4 Dependence of Frequency

By means of changing the test frequency within the range of 2 |4 MHz reflection positions can provide portions with differing sound reflection amplitudes. This dependence of frequency is to be recorded, if the FBH-values of the same individual flaw which have been determined with different frequencies deviate for 50% and more from each other. The recording should happen only in case the decision limit has been passed over by the indication.

8.5 Back Wall Echo drop ≥ 3 dB

The back wall echo drop is to be measured in the area of recordable indications of the shaft.

8.6 Limit of the Flaw Detection Sensitivity

The minimum detectable size is the value of the smallest detectable circular disk reflector (FBH) under consideration of a signal/noise ratio of 6 dB. The minimum detectable size is to be determined for all applied probes and sound directions and to be recorded in FBH together with the corresponding details, e.g. probe, sound direction, sound path, etc.

For areas with quality level 1a a detection limit of 0.5 mm FBH is to be aimed for and for the remaining areas a detection limit of 1.0 mm FBH.

9 Recording- and Decision Criteria's

Recordable are:
- Indications according to table 2

GS-12014

Decision limits are:
- Indications according to table 2
- Transgression of the attenuation values
  2 MHz : 2 dB/m
  4 MHz : 6 dB/m
  5 MHz : 10 dB/m
- Indications from flaw areas, which will be exposed after final machining of the shaft
- In case of recodable indications in the area of the later bore hole, a special permission for drilling is required
- detection limit exceeds 1.5 mm FBH in direction A3 and A7 with the probes B2S or B4S and WB45-N2
- detection limit exceeds 1.0 mm FBH in direction A9 and A7 with the probe SEB4H0° and in direction A8 with the probe WB70-N2

With transgression of the above-mentioned features, a deviation report is to be prepared.

10 Surface Crack Examination of the cross-section transitions

The areas of the cross-section transitions (areas with diameter differences≥200 mm at the heat treatment) are subjected additionally to a surface crack examination (MT) in dependence EN 10228-1 in the **delivery condition**. A yoke magnet with alternating current is to be used for magnetization.The surface roughness must correspond to Ra < 20 µm. For the recording limit and admissibility criteria, quality class 3 is to be used (see EN 10 228-1, table 2).

11 Surface-Crack-Examination of the Axial Hole Bore

The axial boring is subjected to a surface crack examination (MT) to preferably in length direction in the delivery condition.The surface roughness must correspond to Ra < 6.3 µm. For the recording limits and admissibility criteria, quality class 4 is to be used (see EN 10228-1, table 2). An Eddy current examination (ET) can also be carried out alternatively. For this the manufacturer must make out a test instruction and submit it to the purchaser for confirmation.

12 Reporting

Following the examinations an inspection and testing certificate 3.1 B according to EN 10204 is to be drawn up. The MT must be documented in accordance with EN 10 228-1. The UT report must contain the following information for the purpose of repeatability of the examination:

a) Details about the examined object
- identification data (ident-No., material, heat-No., etc.)
- surface condition
- step of the production flow when the examination happened

b) Details about the examination technique
- examination instruction
- scope of examination
- instrument

GS-1204

- probes
- frequency
- couplant
- kind of calibration
- values of correction

c) Results of the examination
- limit of the flaw detection sensitivity
- sound attenuation values in dB/m
- recorded indications

The indications to be recorded are to be described by sufficient information concerning their position, location, size and/or depth extension etc. and are to be described in a dimensioned sketch of the shaft, the sectional view or a handling of the surface true to size to register. Here, minimum entries must be made in accordance with the indication list (enclosure 1). While filling out the table, the following is to be considered:

· The position specifications of the table are probe positions.
· Volume positions are always entered in degrees.
· Indication types EE+VE of extension and/or GA, GN and RZ are always indication areas. Here, it is necessary for the axial and volume positions and also for the beam path to register the from-, to - and maximum values. In the case of EE+VE without extension (punctual), the maximum values information is sufficient.
· In the column "FBH", the replacement reflector size of indication is indicated. Here, the information is sufficient up to the first place after the comma.
· Back wall drop ≥3 dB is entered in the column "BEA".
· In the columns "Angle of incidence" both, the angle as well as the direction referring to the reference point, is to be specified. The following information e.g. must be made like this:

Probe-No. Acc. to SEP 1923	Angle of incidence (degree)		Remarks
	axial	tangential	
A3	0	0	
A7	0	7cw	
A7	0	7ccw	
A7	0	14cw	
A7	0	14ccw	
A8	70T	0	T = direction TS
A8	70G	0	G = direction GS
A7/A8	7T	7cw	Possible combination

GS = generator side and therefore always output end. The information of the output end is always given in the order drawing (BZ).
· In the column "probe", the trade name of the used probe registered e.g. becomes B2S, WB45-N2, SEB4H0° and so on.
· The column "file name" can be used if the dates to indications are saved electronically.

CS-12 c4j

· At the column "inspection areas", the following insertions e.g. are reasonable:
coupling TS or GS
journal TS or GS
Body

· In the column "remark" e.g., references of additional indication representations in other enclosures are reasonable.

d) General

- date of examination, location of examination
- name of examiner (during the application by several examiners, it must be followable which test section was tested by which examiner)

CS-12041

CORPORATE STANDARD

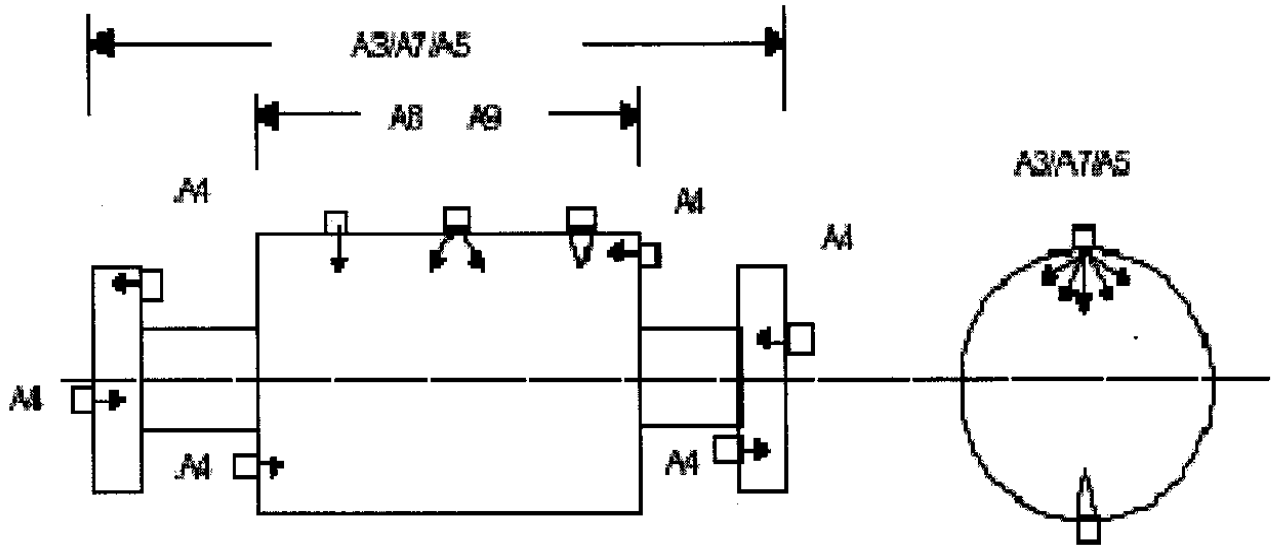

Figure 1 : Direction of incidence

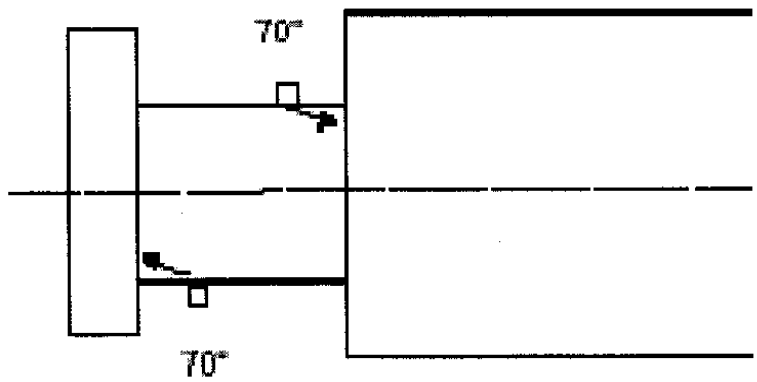

Figure 2 : Examination of the transitions of the cross section

CS-1204

Table-1 : Scope of inspection

Test-No.	testing area	sound direction
A3	100% surface area of journal and body	radial with the probe B2S (B4S)
A4	100% front face of body and front face of	axial with the probe B2S and B4S
A5	clutch	radial with the probe B2S, B4S and B5S
A7	sound attenuation measurement per 1000 mm	2 circumferrential directions
	100% surface area of body and journal	in case of probe B2S with α = 7°14°21° in case of probe B4S with α = 3.5°7°10.5°14°17.5°21°24.5° in case of probe WB45-N2 with α = 45°
A8	100% surface area of body	2 axial directions with the probe WB70-2N, α = 70° up to a depth of about 150 mm (for generator shafts upto a depth of 250mm) additionally cross section transitions with probe WB70-2N, α = 70° when acc. to point 6 required
A9	100% surface area of body up to a depth of about 150 mm	radial with the probe SEB4 when acc. to point 6 required

CS-1204

Table 2: Recording / decision limit

testing area		EE/VE without extension		EE/VE with extension GA, GN, RZ		backwall echo drop [dB]	maximum actual reflector length EE/VE	Maximum areas length (axial or radial) GA, GN
		recording limit mm FBH	decision limit mm FBH	recording limit mm FBH	decision limit mm FBH	decision limit		
body area 0-150 mm [4]		1	2	all indications	1	3	10 mm [1]	10 mm [1]
Center area ≤40% shaft diameter		2	4	1	2	3	10 mm [1]	X [1)2)3)]
Rest area	1%Cr-steel	2	4	1	2	3	10 mm [1]	X [1)2)3)]
	2%-10% steel	2	4	1	2.5	3	10 mm [1]	X [1)2)3)]
	2%-10% Ni-stee	3	6	2	3	3	10 mm [1]	X [1)2)3)]

1) The sound field properties of probe are to be taken in to consideration
2) Total radial extension: 40% of shaft diameter at the indication area

3) It is to be considered, whether indications occur with extension > beam diameter within the area of clustered indications. The decision limit of the real reflector length applies to such indications.
4) For generator shafts applies 0-250mm because of the coil slots

Table 3: Standard shaft materials

	Material identification
1% -Cr-steel	30CrMoNiV 511
2%-Cr-steel	23CrMoNiWV 88
10%-Cr-steel	X12CrMoWVNbN 1011 X12CrMoWVNbN 1011(B)
Ni-steel	26NiCrMoV 115 26NiCrMoV 145 26NiCrMoV 1010

CS-1204

Table 4: Echo shapes in the application of ultrasonic testing of shafts

Screen picture	Echo shape	Symbol
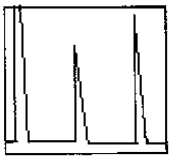	single echo	EE
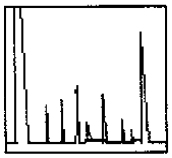	many single echos 1)	VE
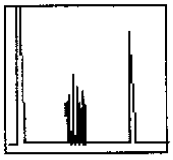	group echos resolvable2)	GA
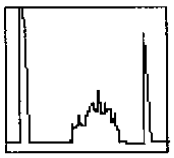	group echos not resolvable2)	GN
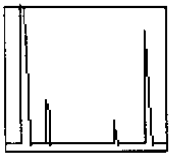	ringzone	RZ

1) An echo shape is to be classified as VE, if the depth distance between the single echos is more than 5% of shaft-diameter on the test location.

2) Group echos are considered resolvable, if the distance between the peak of the lagerst echo and the base of the adjoining echo is > 18 dB. This classifiecation is applicable for 500 mm the time-base range only.

CS-1204

CS-1204

CORPORATE STANDARD

Indication List **Report**

Annexure 1 **Page** **of**

Job Name **Drg.No**

No.	Insp. Area	File Name	Type	UT-Probe	Angle of Incidence	Axial position	Circumferential position	Sonic distance	KSR EFH	RES BEA	Remarks

Dept. Name Location, Date Sign. Release

Annexure 2

Company	Certificate acc. To EN 10 204- 3.1B **Ultrasonic - Report**	Page of
Ident-No.	Specifications	
Item	Material	Drawing No:
Order-No.	Heat-No.	

Type of probe	Scanning direction	Calibr. probe	distance	Calibr. Sensitivity (dB)	Detectable Limit (mm FBH)	Sound Path (mm)	Correction Values (dB)	Test Sensitivity (dB)	Remarks
ϕ mm									
ϕ mm									

CS-12041

Download Documents of tender no.EE211/2009/1480N:

Main Document
Annexure-1
Annexure-2&3 – Minimum qualifying requirement & Experience
Annexure-4 – Terms & Conditions of two part tender
Annexure-5 – Quality Plan (SQP/TGS)
Annexure-6 – MTE-FS-006
Annexure-7 – SRF for foreign supplier
Annexure-8 – SRF for Indian Supplier
Annexure-9 – Performa of Bank Guarantee
Annexure-10 – List of Consortium Bank
Annexure-11 – NTPC format

Drawing no.11360100051

Specification:
HW19476
AA0850150
AA0850155
AA0850106