FIRST ANGLE PROJECTION

(ALL DIMENSIONS ARE IN mm)

DRG. NO. 1 476 80 50006

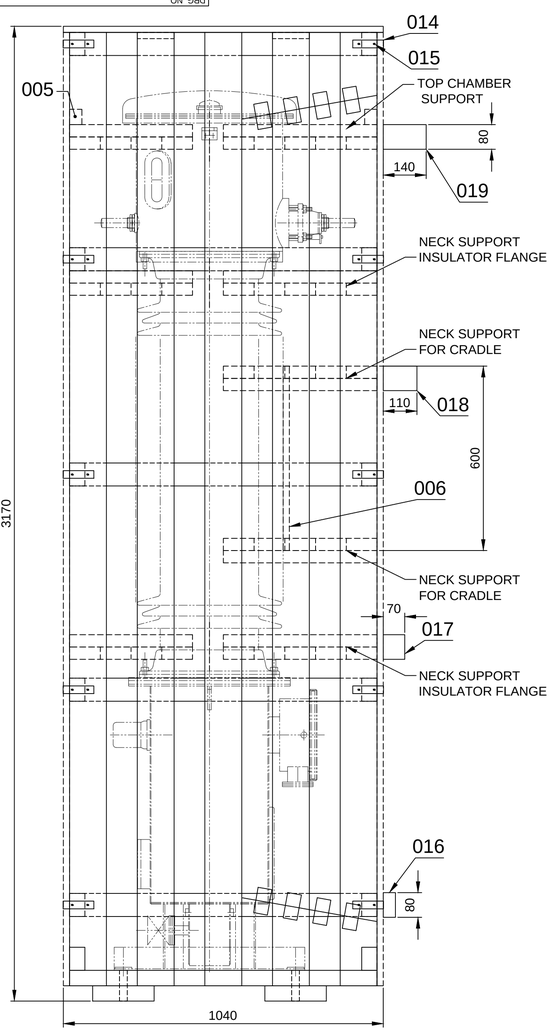

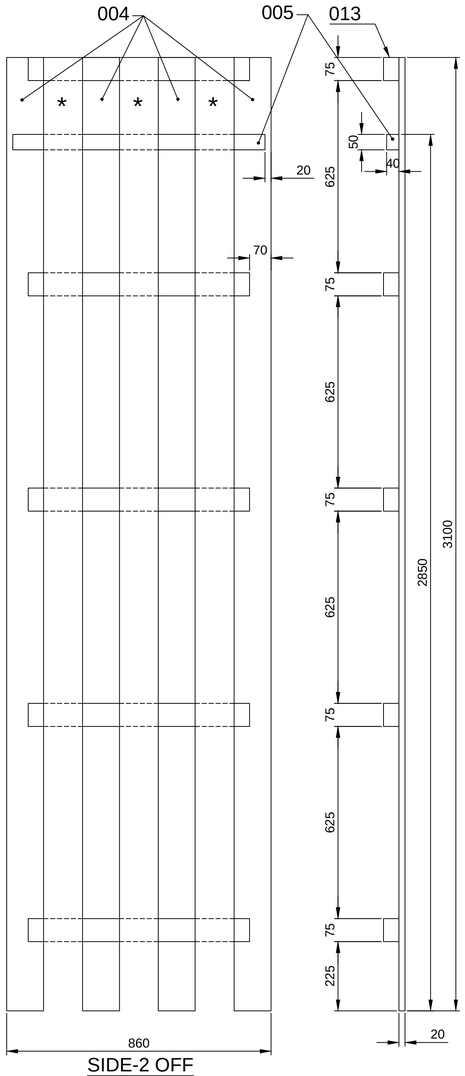

SIDE-2 OFF

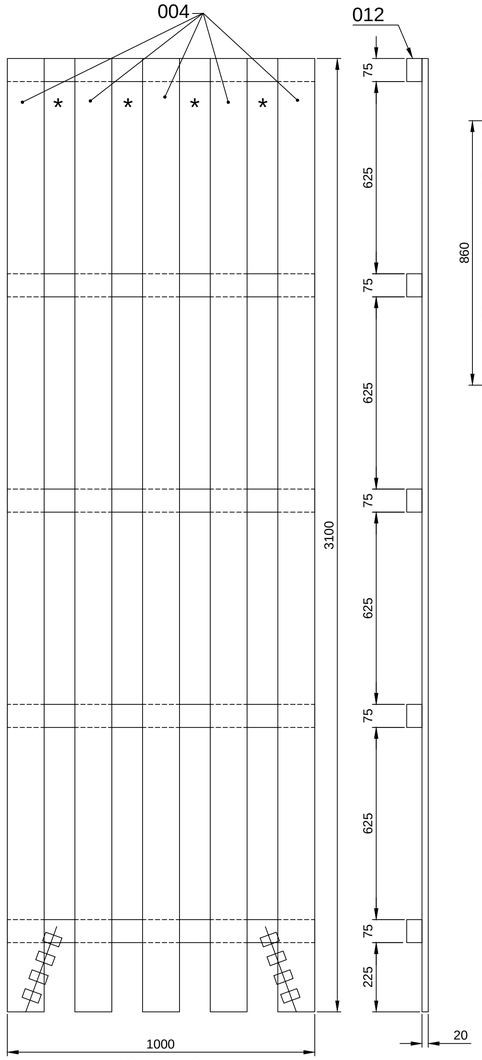

FRONT-2 OFF

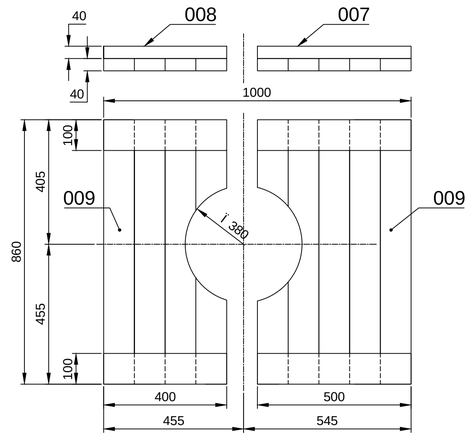

NECK SUPPORT FOR INSULATOR TOP/BOTTOM FLANGE - 2 OFF

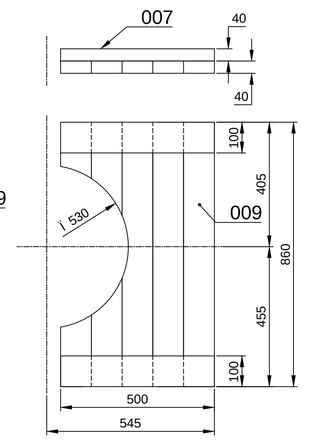

NECK SUPPORT FOR CRADLE - 2 OFF

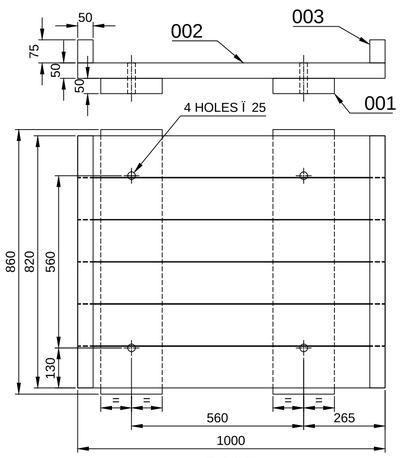

BASE

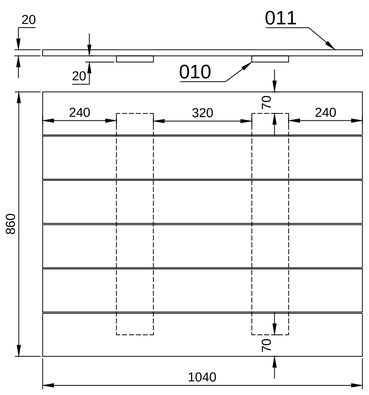

TOP COVER

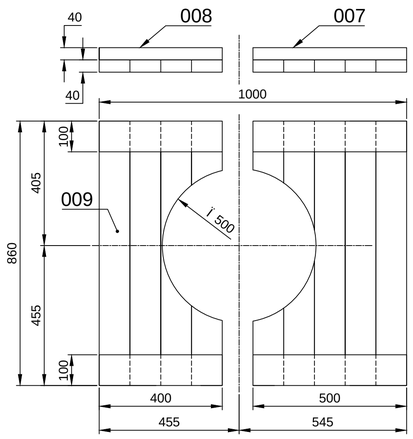

TOP CHAMBER SUPPORT

NOTES:-

1. TO STORE THE CTS. PLEASE KEEP IT VERTICALLY.
2. * GAP SHOULD BE EQUALLY SPACED BETWEEN 2 PLANKS.
3. MARK SLINGING POSITION ON THE BOTTOM OF FRONT SIDE.
4. DURING TRANSPORT; KEEP IT HORIZONTALLY AND MAINTAIN APPROX 2Á ANGLE FROM THE GROUND (KEEP TOP CHAMBER HIGHER).

VAR. 00	REMARKS	ITEM NO.	DESCRIPTION	DRAWING NO.	ITEM / VAR	STD.	MATL.CODE / MATL. SPECN.	A - C	UNIT	UNIT WT. / QTY.
001		019	WOODEN BATTON 80TKx140x860LG.				PS 51414			
001		018	WOODEN BATTON 80TKx110x860LG.				PS 51414			
001		017	WOODEN BATTON 70TKx80x860LG.				PS 51414			
001		016	WOODEN BATTON 40TKx80x860LG.				PS 51414			
AS REQD.		015	NAILS							
AS REQD.		014	STEEL STRIP 0.5TK x 25							
010		013	WOODEN BATTON 50TKx75x720LG.				PS 51414			
010		012	WOODEN BATTON 50TKx75x1000LG.				PS 51414			
006		011	WOODEN PLANK 20TKx140x1040LG.				PS 51414			
002		010	WOODEN PLANK 20TKx120x720LG.				PS 51414			
037		009	WOODEN BATTON 40TKx100x860LG.				PS 51414			
006		008	WOODEN BATTON 40TKx100x400LG.				PS 51414			
010		007	WOODEN BATTON 40TKx100x500 LG.				PS 51414			
004		006	WOODEN PLANK 20TKx50x600 LG.							
002		005	WOODEN BATTON 50TKx40x820 LG.				PS 51414			
018		004	WOODEN PLANK 20TKx120x3100 LG.				PS 51414			
002		003	WOODEN BATTON 50TKx75x820 LG.				PS 51414			
006		002	WOODEN BATTON 50TKx135x1000 LG.				PS 51414			
002		001	WOODEN BATTON 50TKx200x860 LG.				PS 51414			

ADDITIONAL INFORMATION: SEE TABLE FOR W.O.

STATUS OF DRAWING

DISTRIBUTION OF PRINTS

TRE TRP QAX. BAY-8

1 1 1 2

उत्पाद का प्रकार या ग्राहक/परियोजना का नाम / TYPE OF PROTDUCT OR NAME OF CUSTOMER/PROJECT: FOR 132 kV CT MODIFIED TANK COL.B

भारत हेवी इलेक्ट्रिकल्स लिमिटेड झाँसी
BHARAT HEAVY ELECTRICALS LTD. JHANSI

	नाम /NAME	हस्ता /SING	दि /DATE
बनाया DRN	R.K. RAIKWAR	-sd-	11/11/94
जाँचा CKD	C.V./R.R.J.	-sd-	11/11/94
स्वीकृत APPD	RSG/DSG	-sd-	15/11/94

विभाग DEPT. TRE; कोड CODE 406; अनुरत्न वाय वर्ष बनी UNTOL.DIMS GR. सी/एम/एफ C.M.E.; अनुपात SCALE -; भार(कि ग्रा) WEIGHT (K.G) -

शीर्षक /TITLE: PACKING CRATE FOR 132 kV.C.T (TANK COL.B)

अरे ड्रॉइंग का संदर्भ / REF. TO ASSY. DRG

मद क्रम ITEM NO. / मद संख्या NO OF ITEM

कार्ड कोड CARD CODE

ड्रॉइंग क /DRAWING NO.: 1 476 80 50006

पृष्ठ REV.: 03

शीट क्र SHR. NO. / शीटों की सं NO. OF SHEET

REV.	DATE		
		ALTREED	
		CHECKED	
03	15.04.17	ALTREED	
		CHECKED	
02	16.08.05	ALTREED	-sd-
		CHECKED	-sd-
01	19/12/94	ALTREED	-sd-
		CHECKED	-sd-

DRG. GENERALLY REVISED.

IN BOM ITS. 012, 013 LENGTH 1040, 820 WERE 1140, 860. AND TOTAL VOL. 0.332 WAS 0.334 CU.M. AND IT.005 ADDED.

IN BOM ITS. 004, 009 & 013 LENGTH 3100, 820 & 860 WERE 3200, 840 & 820 & 860 WERE 3200, 840 & 820 REPTLY. TOTAL VOL. 0.334 WAS 0.338 CU.M. NOTE 3 ADDED.

CAUTION

14758050003

REF. DRG. NO.

SIGN AND DATE

INVENTRY NO.