FIRST ANGLE PROJECTION

(ALL DIMENSIONS ARE IN mm)

DRG. NO. 1-13601-30624/02

INGOT TOP

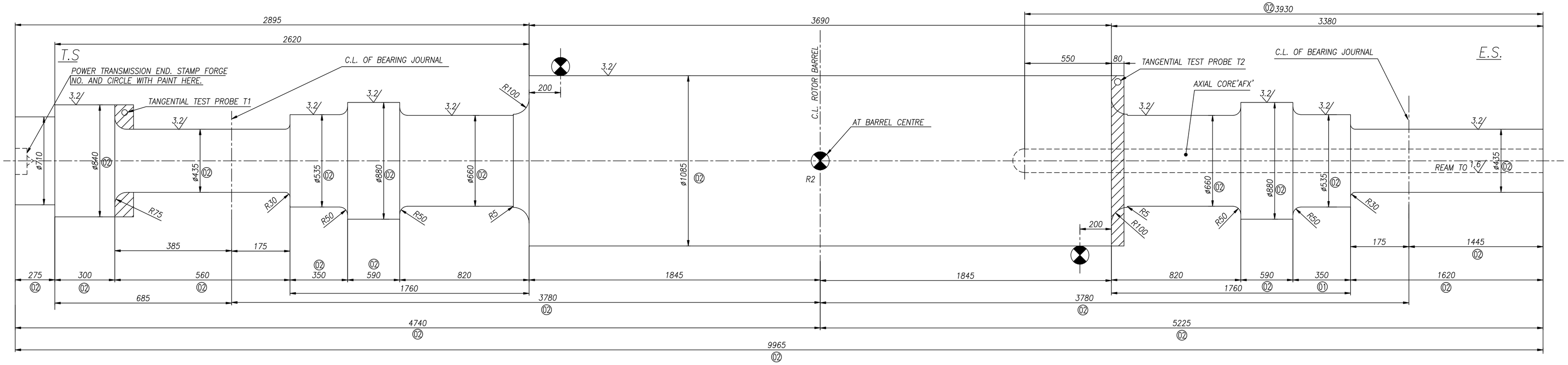

MATERIAL: 26 Ni Cr Mo V145

SPECIFICATION: HY 19471

DETAIL-Z

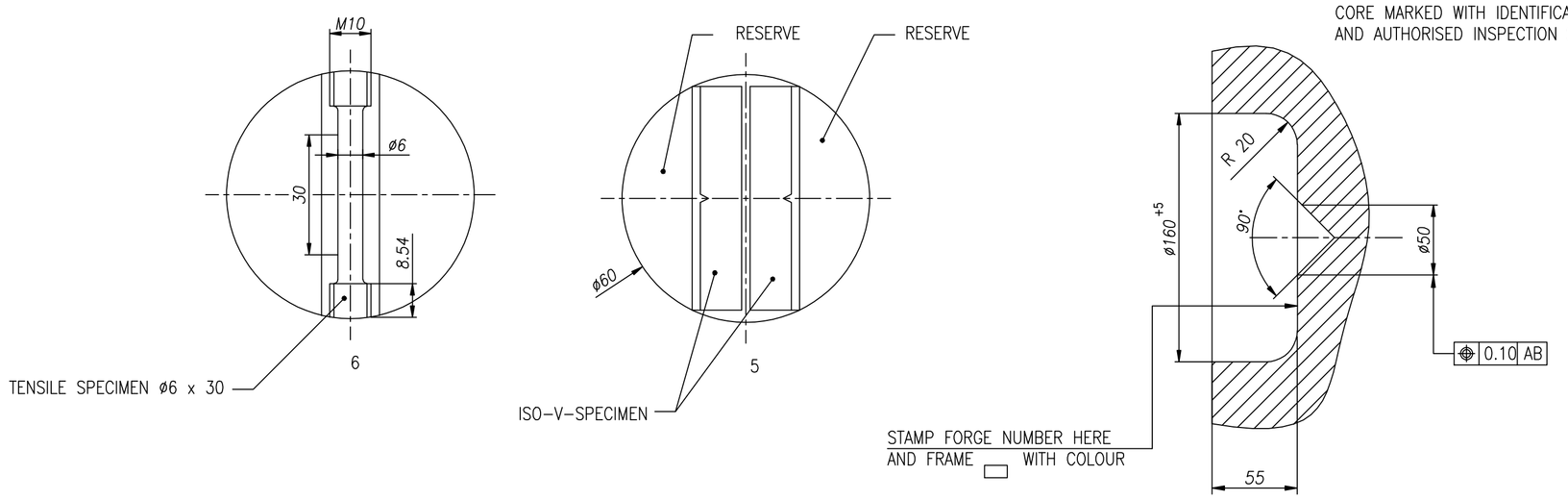

DETAIL OF AXIAL CORE 'AXF'

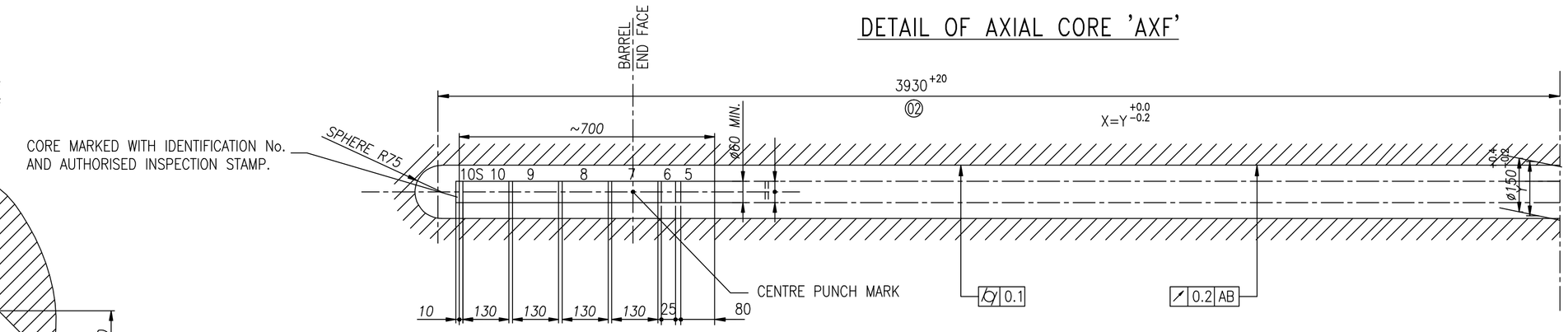

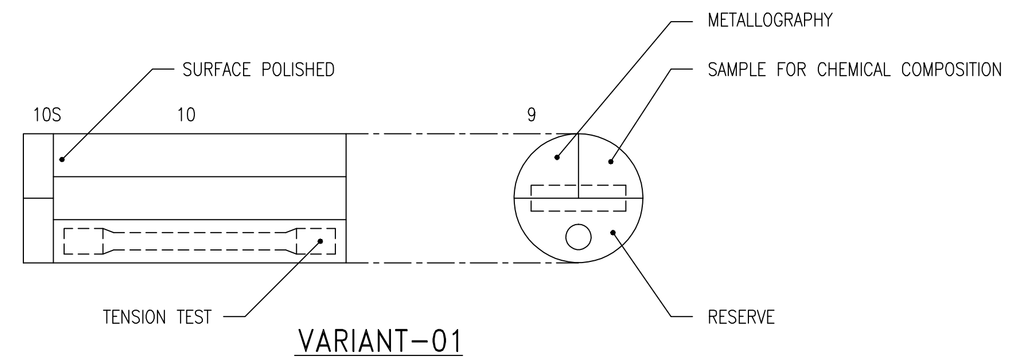

VARIANT-01

ITEM NO.	DESCRIPTION	DRAWING NO.	VAR. NO.	RAW MATERIAL SIZE OR CASTING DRG. NO. OR FORGING DRG. NO.	MATERIAL CODE / MATERIAL SPECN.	NET WT. / QUANTITY	GROSS WT.
	ROTOR FORGING	11360130624	NA		TG9517150032 / HY 19471	1	42000

THE FOLLOWING CONDITIONS APPLY EXCEPT OTHERWISE STATED....

1. REF. TO HY0230261 FOR UNSPECIFIED TOLERANCES.
2. CHAMFER M/CD. SHARP EDGES 1.2 TO 1.0 AT 45°.
3. INTERNAL M/CD. CORNER RADII 1 TO 0.7
4. THE SURFACE ROUGHNESS WHEREVER NOT SHOWN SHALL BE TAKEN FROM THE SURFACE ROUGHNESS SHOWN OUT SIDE BACK SLASHS GIVEN AT THE TOP MOST RIGHT CORNER OF THE DRG.

TYPE OF PRODUCT / NAME OF CUSTOMER/PROJECT: TARI 1080-36Q

BHARAT HEAVY ELECTRICALS LIMITED HYDERABAD

	NAME	SIGN.	DATE	NO.OF VAR.
DRN.	A.K.SINHA	Sd	30.8.07	NA
CHD.	SHAUKAT			
APPD.	U SRIDHAR			

DEPT. CODE	UNTOL. DIMS. CR.	SCALE	WEIGHT (KG)	REF. TO ASSY DRG.	ITEM NO.	NO.OF ITEMS
	C/M/F	N.T.S.	42000		1	NA

TITLE: ROTOR FORGING

CARD CODE | DRAWING NO. 1-13601-30624 | REV. 02

SHEET NO. 01 | NO OF SHEETS 01

REV.	DATE	ALTERED	REV.	DATE	ALTERED	REV.	DATE	ALTERED
		CHD./APPD.	02	17.05.08	CHD./APPD.	01	04.01.08	CHD./APPD.
ZONE			ZONE		DIMENSION CHANGED AS SHOWN.	ZONE		DIMENSION CHANGED AS SHOWN.

THE INFORMATION ON THIS DOCUMENT IS THE PROPERTY OF BHARAT HEAVY ELECTRICALS LIMITED. IT MUST NOT BE USED DIRECTLY OR INDIRECTLY IN ANY WAY DETERMENTAL TO THE INTEREST OF THE COMPANY

COMPUTER FILE NAME | SIGN. AND DATE | REF. DRG. NO. | INVENTORY NO