FIRST ANGLE PROJECTION

(ALL DIMENSIONS ARE IN mm)

DRG. NO. 1-12015-56600

Steam Turbine
Contents

Gas Heating Device for Bolts
with heating bores 20 and 25 mm diameter

Two heaters are provided for simultaneous heating of two bolts.

A	2	Claws for G1/4" external thread coupling
	2	Gate valves V1/4"
	2	Fuel gas hoses to length - 0.8 m, with connectors
	2	Pressure measuring instruments with T- and union fittings
	2	Mixing heads with two sleeves, diameter 46 mm
	1	Depth gauge A1h0
	1	Measuring rod: 30 mm length
	1	Measuring rod: 50 mm length
	1	Measuring rod: 100 mm length
	5	Measuring rods, each 200 mm length
	1	Magnet for handling the measuring rods in the heating bore
	1	Crane-rubber plate (normal)
	1	Description M TN 03370
B	2	Reducers, from M20 * 1.5 to M18 * 1.5
	4	Pipes 16 mm diameter * 2.5 * 440 (length)
	2	Sleeves (centering diameter 34 mm) with union nut and clamp ring
	2	Washers for centering the measuring rods; for 20 mm heating bore diameter
	1	Sleeve 34.5 * 24 (diameter) * 80 length (for measurement)
	2	Nozzles, size 6 (9 - 9 mm) for connection with heating torch, with clamp and mounting bracket for reinforcement
C	2	Elbows with welded-on bushing (fabricated from 16 * 2.6 pipe)
	2	Clamp rings (halves)
	2	Metal hoses, length 1000 (corrugated) for 20 mm diameter heating bore
D	4	Pipes 20 mm diameter * 2.9 * 460 (length)
	2	Sleeves (centering diameter 35 mm) with union nut and clamp ring
	2	Washers for centering the measuring rods; heating bore diameter 25 mm
	1	Sleeve 39 * 16 (diameter) * 110 length (for measurement)
	2	Nozzles, size 6 (9 - 14 mm) for connection with heating torch
E	2	Elbows with welded-on bushing (fabricated from 20 * 2.9 pipe)
	2	Clamp rings (halves)
	2	Metal hoses, length 1000 (corrugated) for 25 mm diameter heating bore
F	4	Mounting brackets
	4	Hexagon socket head cap screws M8 * 80 and 4 screws M8 * 60
G	1	Cylindrical compression spring and 1 adjusting ring for tensioning the spring when performing measurement from below, for 20 mm diameter heating hole
	2	Threaded sleeves M34 * 1.5 for heating from below
	4	Threaded bushings M39 * 1.5 for heating from below
H	1	Cylindrical compression spring and 1 adjusting ring for tensioning the spring when performing measurement from below, for 25 mm diameter heating bore
	2	Threaded sleeves M30 * 1.5 for heating from below
	4	Threaded bushings M48 * 1.5 for heating from below

7 accessory hexagon socket set screws M6 * 25

The following parts are provided for each heating bore:

Heating bore 20 mm diameter TUN 01440.2
Type 1: all parts listed under A and B
Type 2: all parts listed under A, B and C
Type 3: all parts listed under A, B, C, F and G

Heating bore 25 mm diameter TUN 01440.2
Type 1: all parts listed under A and D
Type 2: all parts listed under A, D and E
Type 3: all parts listed under A, D, E, F and H

Siemens AG
Energieerzeugung (KWU)

E-M-TN 03371
07.93

Copyright © Siemens AG 1994 - All Rights Reserved.

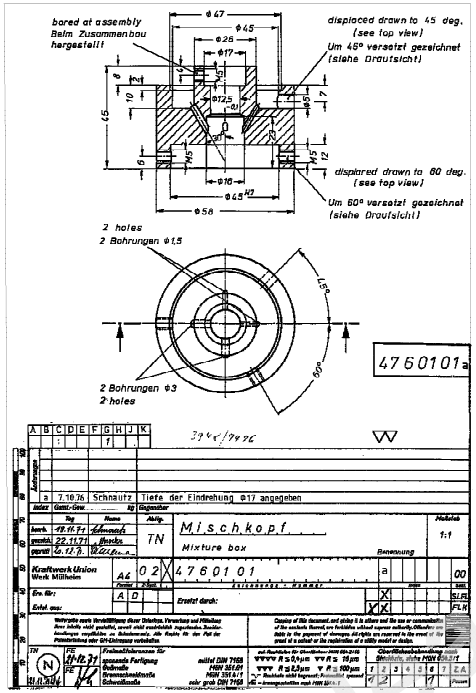

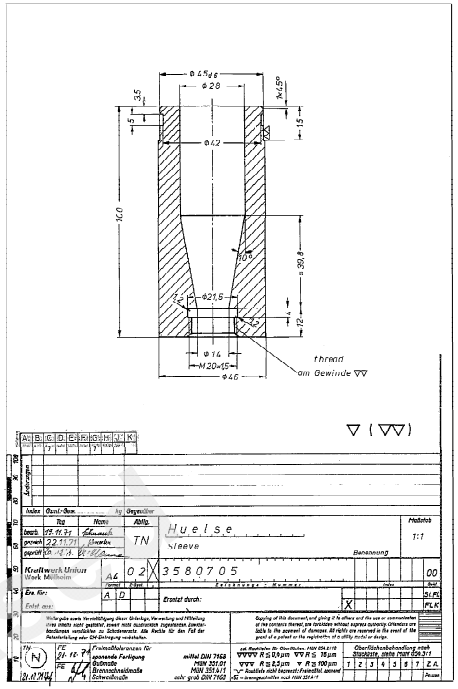

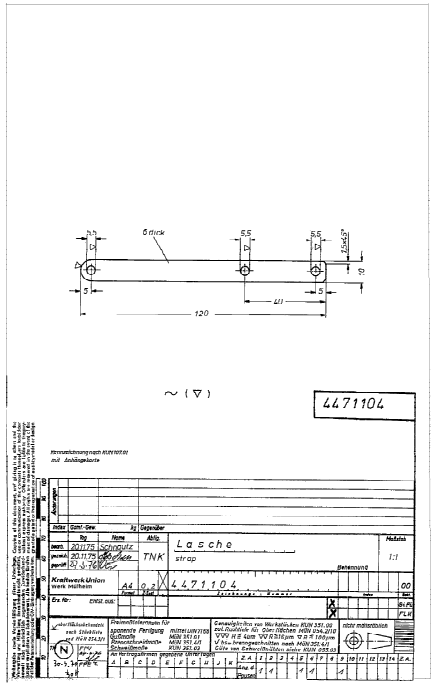

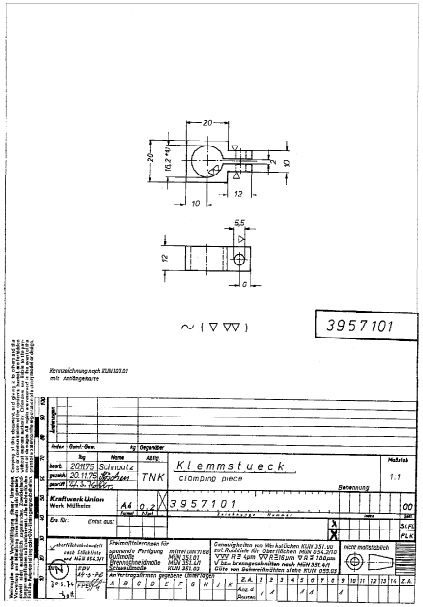

COMMON PARTS FOR HEATING BORE (HOLE) 20, 25 & 32

C.B.O.M. No.				STATUS OF DRG
	ARBEITS DEPT	NAME	SIGN	DATE
GRADE OF UNTOL.DIM				
M/CG.- AA0230200				
WELDING-AA0621104				
GAS CUTTING--T3-AA0621101				
REV	DATE	ALTERED	REV	DATE	ALTERED
		CHECKED			CHECKED

TYPE OF PRODUCT OR NAME OF CUSTOMER/PROJECT: STEAM TURBINE

BHARAT HEAVY ELECTRICALS LTD. RANIPUR, HARDWAR

	NAME	SIGN	DATE
DRN	ASHOK	-SD-	21.03.2017
CHD	DINESH	-SD-	21.03.2017
APPD	D.K.RAY	-SD-	21.03.2017

NO. OF VAR – 73 74

DEPT STE CODE 4011 | SCALE N.T.S | WEIGHT (KG) 70.0 | REF. TO ASSY. DRG. | ITEM No. – | NO. OF ITEMS – 75 77

TITLE : STUD HEATING AND MEASURING DEVICE

CARD CODE 7

DRAWING NO. 1-12015-56600 22 23 24

SHEET No. 04 | No. OF SHEETS 13

A1 SIZE

THE INFORMATION ON THIS DOCUMENT IS THE PROPERTY OF BHARAT HEAVY ELECTRICALS LIMITED. IT MUST NOT BE USED DIRECTLY OR INDIRECTLY IN ANY WAY DETRIMENTAL TO THE INTREST OF THE COMPANY

INVENTORY NO. | SIGN HARDLATE | TN NO. P0102318006 | REF. DRG. NO. TUN 01440.2

Released