FIRST ANGLE PROJECTION

(ALL DIMENSIONS ARE IN mm)

DRG. NO. 1-12015-56600

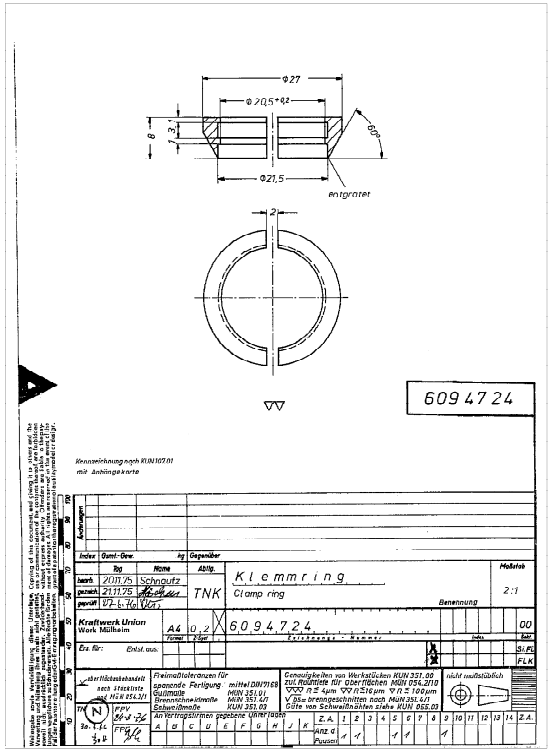

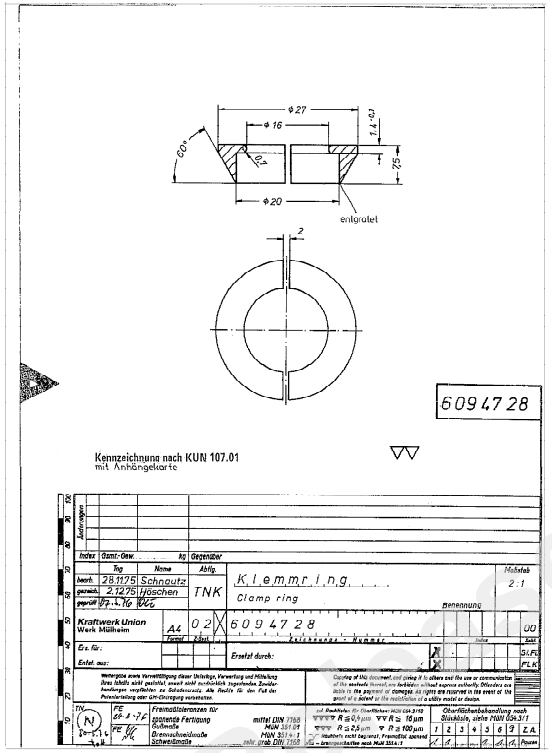

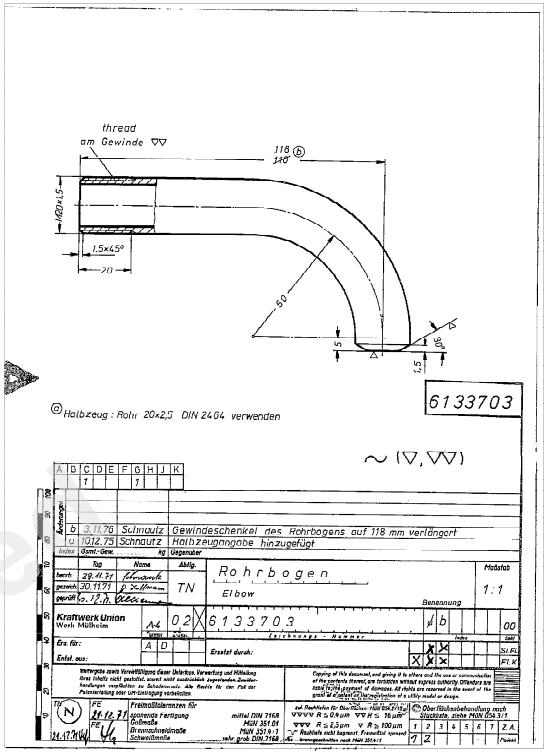

ADDITIONAL PARTS FOR HEATING BORE (HOLE) 25

TYPE OF PRODUCT OR NAME OF CUSTOMER/PROJECT	STEAM TURBINE
BHARAT HEAVY ELECTRICALS LTD. RANIPUR, HARDWAR	DRN ASHOK SD/- 21.03.2017; CHD DINESH SD/- 21.03.2017; APPD D.K.RAY SD/- 21.03.2017
DEPT STE CODE 4011	SCALE N.T.S; WEIGHT (KG) 70.0; REF. TO ASSY. DRG.; ITEM No.; NO. OF ITEMS
TITLE: STUD HEATING AND MEASURING DEVICE	CARD CODE; DRAWING NO. 1-12015-56600
	SHEET No. 10; No. OF SHEETS : 13

GRADE OF UNTOL.DIM
M/CG.-C/M/F AA0230206
WELDING-A/B/C/D / AA0621104
GAS CUTTING-'13'AA0621101

GMS No./ C.B.O.M.- NO.

AI SIZE

THE INFORMATION ON THIS DOCUMENT IS THE PROPERTY OF B-HARAT HEAVY ELECTRICALS LIMITED.
IT MUST NOT BE USED DIRECTLY OR INDIRECTLY IN ANY WAY DETRIMENTAL TO THE INTREST OF THE COMPANY